SAI ROLOTECH
ROLL FORMING REVOLUTION
PLOT NO 575/1 G.F MUNDKA INDUSTIRAL
AREA- NEW DELHI 110041
Ph: +91-9899925274,9818205274
Email .id : sairolotech@gmail.com /
Info.vipinjangra@gmail.com
Web: www.Sairolotech.in / www.Sairolotech.com

Date: 18-10-2025.

Dear Sir,

Thank you for your interest in our products and company. As per Our conversation, we are pleased to quote you for above mentioned product suitable for your requirement

SUBJECT: QUOTATION FOR FALSE CELLING CHANNELL ADVANCE ROLL FORMING MACHINE.

Description of the Roll Forming machine

MACHINE TYPE	ADVANCE MODEL
Rolls Material	OGNS Grade Temper & Hardened 52 TO 57 HRC on Rolls
Shaft Material	EN-8, DIA 50MM
Bearing	DOUBEL BEARIN PER BLOCL
Frame	All Steel Body. Plate type Fabricated By Channel & Angle
Plate Thickness	25mm, Blocks & Plate Machined on VMC (JAPANESE) For More Accuracy
Gear Box	1 PIC REDUCTION GEAR BOX 4 INCHI HAVY DUTY

Power Transmission	32 MM WORM GEAR
Gears	Double Side Gear , All Steel Gears For Extra Life Driving Gears All on Bearings
Motor	Crompton/BBL/ABB, 5 hp
Cutting station	HYRDOLIC SHARING /CUTTING CAR
De-Coiller	Capacity 400 KG. Standing type
Channel Length	Length Measurement Through STOPER/PLC
Machine	Heavy Duty Maintenance Free
Toolings	All tooling on CNC & VMC machinig to close the tolerance & for High Accuracy
Material Thickness	0.3 mm to 0.8 mm
ROLLS ULTRASOUND TEST	YES
MACHINE SPEED	HIGH
TIE ROAD	UP AND DOWN BOTH SIDE 12 MM
MACHINE SIDE COVER	INCLUDED
CUSTOME KNURLING	YES WITH BRAND NAME STEMP WITH ULTRA ROLLS PLAIN
CONTROL PANNEL	YES PLC BASE /MANUAL

Entry Gate

Entry gate will be provided for movement of sheet to roll former.

Main Base

The main base is MS fabricated structure and adequately ribbed to minimize the distortion. It is accurately machined on top and bottom surfaces the threaded holes are made on the bed for positioning the stands.

- ## Roll shafts

The roll shaft dia. 50 mm will be manufactured from quality steel and will be keyed to locate tooling.

- ## Drive

The drive to the roll former will be by means of a gear box system. The main drive will be provided by means of 10 HP motor

- **THE ROLL FORMING TECHNOLOGY**

Roll forming process is one of most efficient way to form a material into shape and you can add more valued addition process like punching, notching dimple holes or marking. SAI ROLOTECH roll forming has rolled with the changes over the past 10 years and now sees an exciting future serving the various industries.Roll Forming Machines.

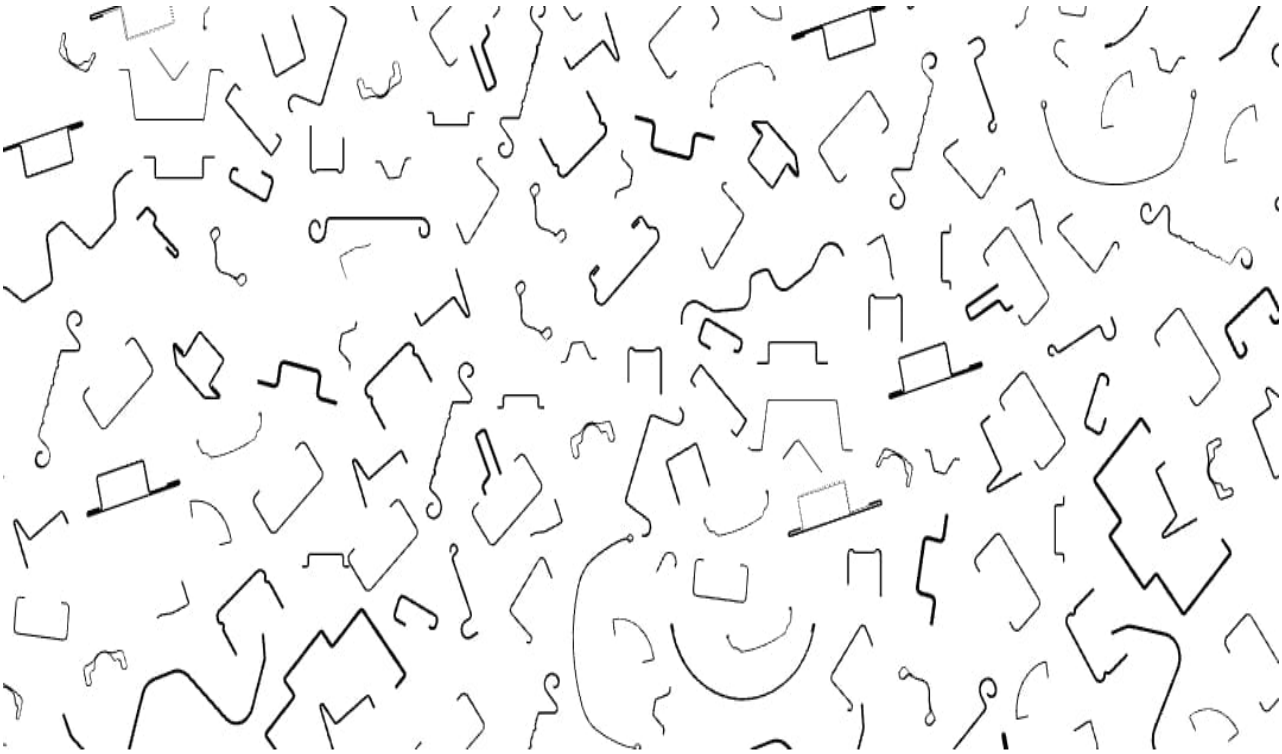

Custom Profile

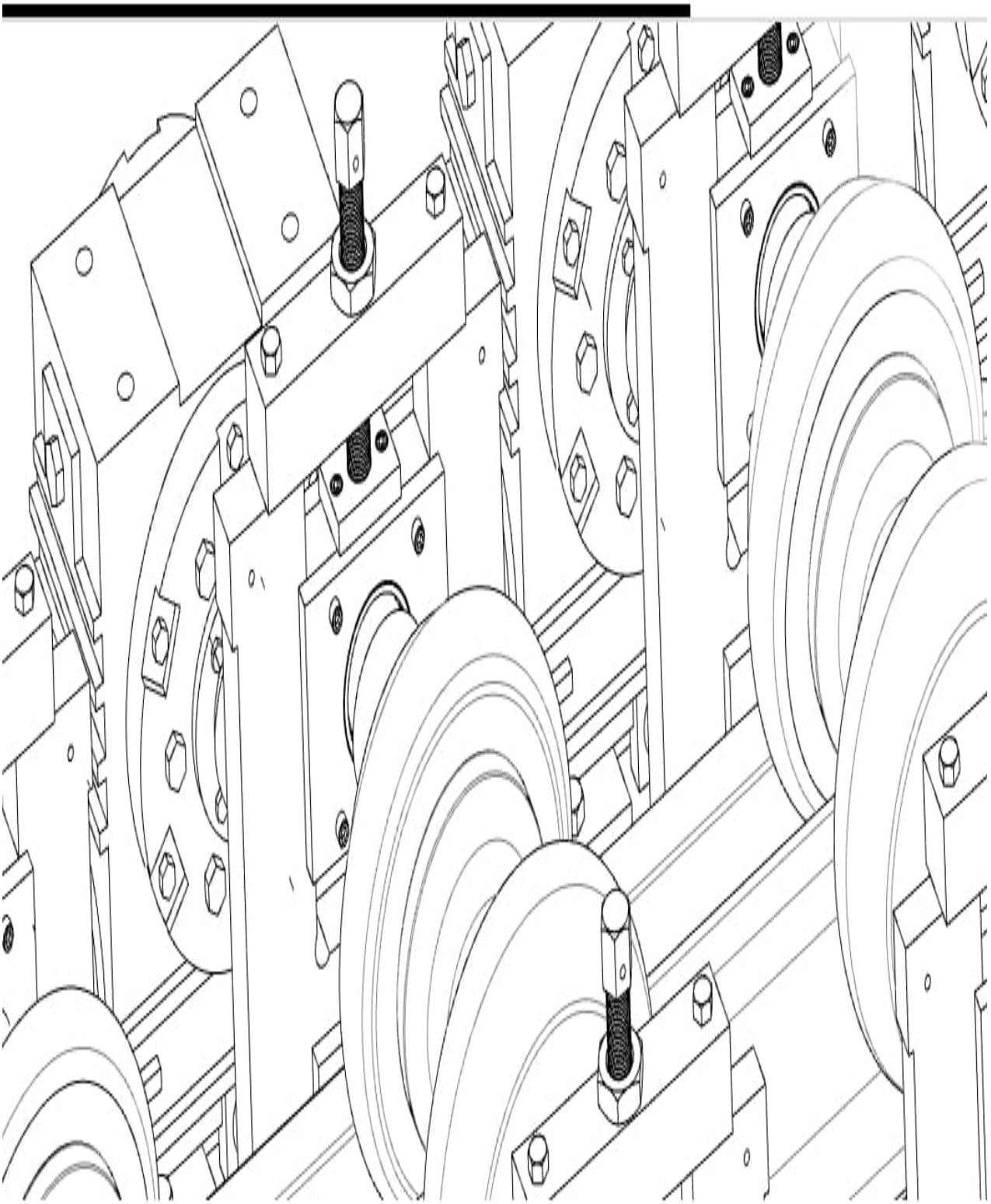

Design Experience

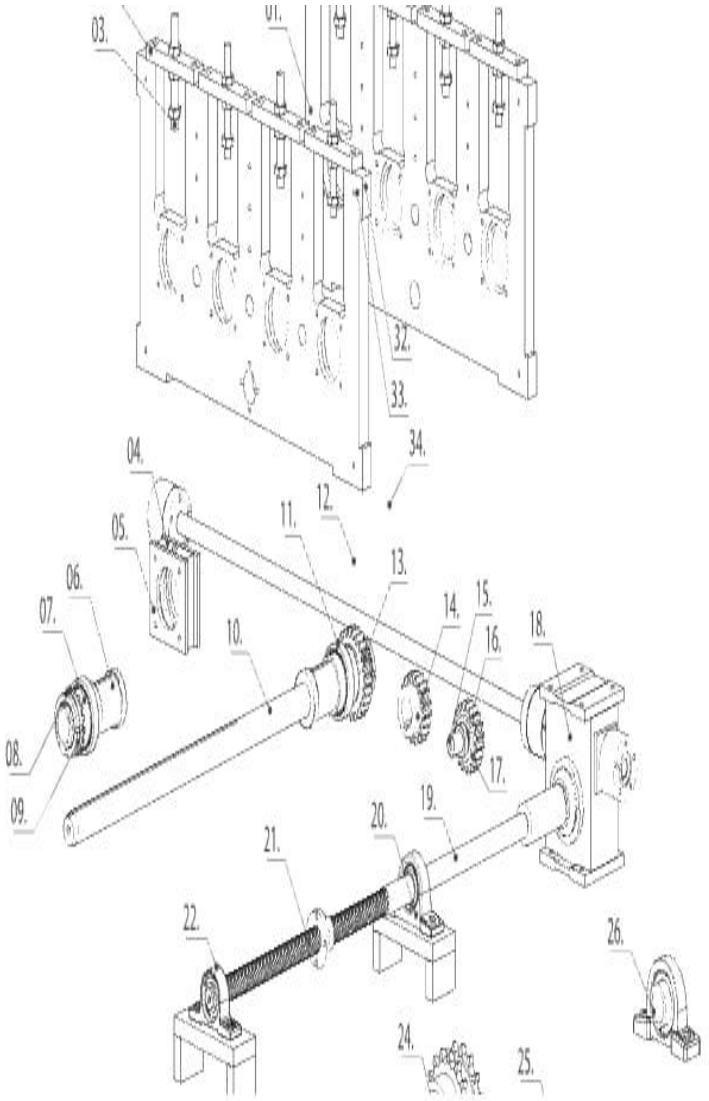

In-house manufacturing

- Hydraulic Die cut-off with length limit controller:

there is very big change in section cutting, Section length is controlled by length limit plate that attached with adjustable steel bar when required length is complete it will push the cutting system and press on limit switch that send pulse to hydraulic cutting system to cut the section profile, This process is flying cut- off, once you adjust the limit plate as per required length then you don't need to Start machine again,

- BENEFITS: Easy to use.

No manually cutting required means unskilled person can handle machine,
Suitable for small quantity, changing length production.

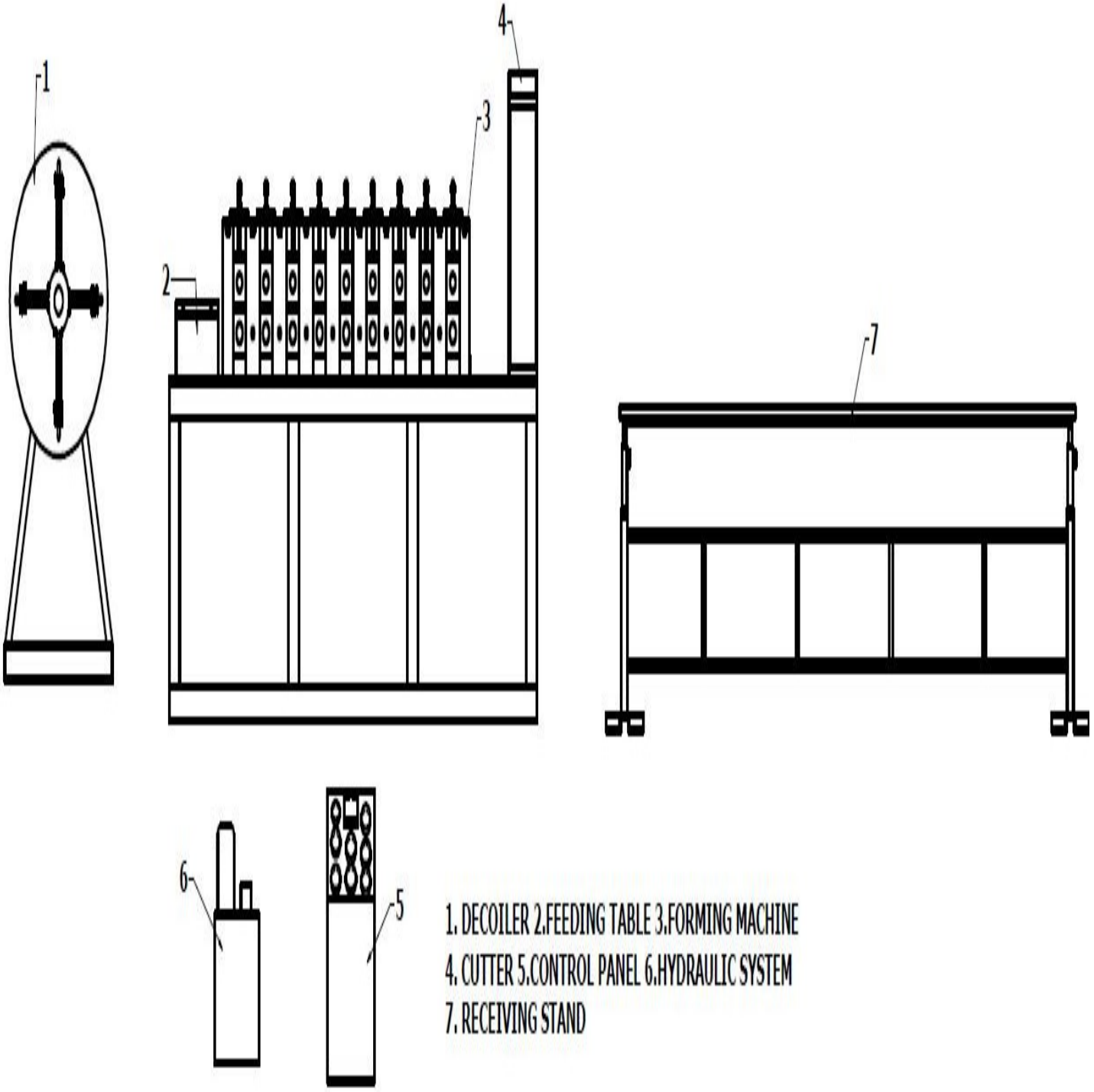

The Chart of Process flow:

GSTIN : 07AWDPV5272C1ZG

Sales Quotation

SAI ROLOTECH

PLOT NO 575/1.G/F MUNDKA UDYOG NAGAR, SOUTH SIDE INDUSTIRAL AREA NEAR
ROHTAK ROAD NEW DELHI

Tel. : 9899925274 email : info@sairolotech.com

Party Details :
Crickle Innovations Private Limited
Surkhab Chowk, Sirsa - 125055 HR

GSTIN / UIN : 06AAJCC8005B1Z4

Quotation No. : 232
Dated : 18-10-2025

S.N.	Description of Goods	HSN/SAC Code	Qty.	Unit	Price	Amount(₹)
1.	GYPSUM CELLING + ANGEL CHANNEL MACHINE *Model Type : Automatic Advance Model* *Rolls Matrial= D3* *Rolls Ultra Sound = Yes* *Rolls Bore Grinde = Yes* *Rolls Heat Tritment = Hard Chrome+polish* *Rolls Maching =cnc+ Ai Tolling* *Side Plate = 25 Mm* *Side Plate Maching = Vmc* *Cutting = Hydrolic Sharing* *Lenth Control = Plc* *Power Pack = 40 Ltr* *Pannel = High Qultiy* *Bearing per Block = 2* *Safty Cover = Yes* *Side Cover = Yes* *Gear Box = 4 Inchi Havy Duty* *Tie Road = Both Side* *Sheet Picher = Yes*	8455	1.00	Units	9,50,000.00	9,50,000.00
	Totals c/o		**1.00**	**Units**		**9,50,000.00**

Bank Details : ACCOUNT NO-226133000000022,IFSC CODE-IOBA0002261
BANK NAME-INDIAN OVERSEAS BANK,BRANCH-NAJAFGARH

Terms & Conditions
E.& O.E.
1. Goods once sold will not be taken back.
2. Interest @ 18% p.a. will be charged if the payment
Is not made with in the stipulated time.
3. Subject to 'Delhi' Jurisdiction only.

Receiver's Signature :

For SAI ROLOTECH

Authorised Signatory

GSTIN : 07AWDPV5272C1ZG

Sales Quotation

SAI ROLOTECH

PLOT NO 575/1.G/F MUNDKA UDYOG NAGAR, SOUTH SIDE INDUSTIRAL AREA NEAR ROHTAK ROAD NEW DELHI

Tel. : 9899925274 email : info@sairolotech.com

Party Details :
Crickle Innovations Private Limited
Surkhab Chowk, Sirsa - 125055 HR

GSTIN / UIN : 06AAJCC8005B1Z4

Quotation No. : 232
Dated : 18-10-2025

S.N.	Description of Goods	HSN/SAC Code	Qty.	Unit	Price	Amount(₹)
	b/d		**1.00**	**Units**		**9,50,000.00**
2.	GYPSUM PERI + INTER CHANNEL MACHINE *Model Name : Semi Automatic Advance* *Rolls Matrail = D3* *Rolls Maching =cnc + Ai Tooling* *Side Plate Thiknes = 25 Mm* *Side Plate Maching = Vmc* *Bearing per Block = 2 Pc* *Rolls Heat Tritment = Tampar + Hard Chrome + Polish* *Rolls Ultra Sount Test = Yes* *Rolls Mtc Test = Yes* *Rolls Bore Grinde = Yes* *Cutting Type = Chop Saw* *Lenth Missurment = Stopar* *Rot Cutting Car = Yes* *Decoiler = Vertical Advance* *Tie Road = Both Side* *Brand Name on Channel = Yes* *Gear Box = 4 Inchi Havy Duty*	8455	1.00	Units	7,50,000.00	7,50,000.00
						17,00,000.00
	Add : IGST				*@ 18.00 %*	3,06,000.00
	Grand Total		**2.00**	**Units**	₹	**20,06,000.00**

Tax Rate	Taxable Amt.	IGST Amt.	Total Tax
18%	17,00,000.00	306000.00	3,06,000.00

Rupees Twenty Lakh Six Thousand Only

Bank Details : ACCOUNT NO-226133000000022,IFSC CODE-IOBA0002261
BANK NAME-INDIAN OVERSEAS BANK,BRANCH-NAJAFGARH

Terms & Conditions
E.& O.E.
1. Goods once sold will not be taken back.
2. Interest @ 18% p.a. will be charged if the payment is not made with in the stipulated time.
3. Subject to 'Delhi' Jurisdiction only.

Receiver's Signature :

For SAI ROLOTECH

Authorised Signatory

➢ OUR BANK DETAILS

Account Name: M/S SAI ROLOTECH
Account Number: 226133000000022
IFSC Code: IOBA0002261
Branch Code : 2261
Branch Name : Najafgarh, New Delhi
Branch Address : RZ – 15
Ground Floor, Old Roshanpura
Najafgarh - Gurgaon Road

Terms & Conditions: -

1. TRIAL MATERIAL ARRANGEMENT BY OWNER .
2. MACHINE DELIVERY TIME 75 DAYS .
3. THE RATES ARE VALID FOR 1 MONTH ONLY.
4. PACKAGING & TRANSPORTATION EXTRA.
5. PAYMENT STRUCTURE 50% ADVANCE WITH CONFIRMED ORDER, 30% PROGRESS ON WORK AND 20% BALANCE AT THE TIME OF MACHINE DELIVERY.
6. 1 YEAR ELECTRICAL PARTS WARRENTY AND 5 YEAR ROLLS WARRENTY.
7. AFTER 2 VISIT SERVICE CAHRGER WILL BE APPLY
8. THREE PHASE AND BODY EARTHING REQURIED FOR AUTOMATIC MODEL
9. WARRENTY NOT COVER IN ACCIDENTAL AND MACHINE MISS HANDLING CASE

10. CANCELLATION: ORDER ONCE BOOKED/CONFIRMED CANNOT BE CANCELLED. ANY ADVANCE PAID WILL BE FORFEITED IN A SITUATION IF YOU FAIL TO TAKE DELIVERY OF THE MILLS AFTER ONE MONTH OF STIPULATED TIME DECIDED ONCE THEY ARE READY FOR DISPATCH / MUTUAL UNDERSTANDING.

We hope our above said information will in line of your requirement, In case you require any further information from our side please feel free to contact us.

Thanking you and hope to get your valued order very soon.

REGARDS
SAIROLOTECH.

VIPIN JANGRA
(PROPERITOR)