ME4001 - Mechanical Design Project

Project Report

Body Movement Wheelchair

By

G Sai Venkat - ME17B013

S Tarun Prasad - ME17B114

Under the guidance of

Dr. Sujatha Srinivasan,

TTK Center for Rehabilitation Research and Device Development (R2D2 Lab)

Contents

1 Introduction **6**

2 Problems being addressed **8**

3 Solutions **10**

4 Control System **11**

5 Mechanical Design **13**

5.1 Adult Wheelchair 13

5.2 Pediatric Wheelchair 14

5.3 Description of the Parts 17

5.3.1 Base Frame 17

5.3.2 Back Frame 17

5.3.3 Chest Support 18

5.3.4 Armrest 19

5.3.5 Footrest 19

5.3.6 Headrest 20

5.3.7 Seat 21

5.3.8 Bottom Assembly 21

5.3.9 Back Wheels 23

5.3.10 Front Castor Wheels 23

5.3.11 Casing 24

6 Simulation Studies **26**

7 Electronics **27**

8 Conclusions and Future Work **29**

9 Acknowledgements **30**

10 References **31**

Appendices **32**

A Assembly Drawings **32**

A.1 Main Assembly 32

A.2 Back Rest Assembly 33

A.3 Base Assembly 34

A.4 Frame Assembly 35

B Individual Part Drawings **36**

C Requirements **37**

C.1 Overview 37
C.2 Wheels and Motors 39
C.3 Sensors and Electronics 40
C.4 Circuit Design 41
C.5 Code Functionalities 42
C.6 Wheelchair Body 43
C.7 Seating 44
C.8 Back Rest 45
C.9 Arm Rest 46
C.10 Foot Rest 46
C.11 Electronics Housing 47
C.12 Postural Support 48
C.13 Battery 48

List of Figures

1 An electric wheelchair with a joystick 7

2 Various Control Systems for Electric Wheelchairs 9

3 FBD for the wheelchair system 12

4 CAD model of the adult version of the wheelchair 14

5 CAD model of the pediatric version of the wheelchair . . . 16

6 CAD model of the base frame 17

7 CAD model of the back frame 18

8 CAD model of the chest support 18

9 CAD model of the armrest 19

10 CAD model of the footrest 20

11 CAD model of the headrest 20

12 CAD model of the seat 21

13 CAD model of the bottom frame 22

14 CAD model of the bottom plate 22

15 CAD model of the wheel assembly 23

16 CAD model of the castor wheels assembly 24

17 CAD model of the casing 24

18 CAD model of the front casing 25

19 CAD model of the left casing 26

20 CAD model of the back casing 26

21 Simulation results on the wheelchair frame 27

22 Electronics Layout 29

A.1 Main Assembly Drawing 32

A.2 Back Rest Assembly Drawing 33

A.3 Base Assembly Drawing 34

A.4 Frame Assembly Drawing 35

1 Introduction

Wheelchairs have been the source of mobility for people with difficulty in walking due to injury, illness or due to other reasons. They help these people to overcome their physical limitations and go on about their daily life by helping them in locomoting between necessary places. To operate these traditional wheelchairs, a certain amount of physical strength and coordination is required. However there are a wide variety of physical limitations faced by specially challenged people and not all of them possess the abilities to operate traditional wheelchairs. Traditional wheelchairs also cannot be used for commuting long distances as the users will suffer from physical fatigue while manually driving these wheelchairs over a period of time. These difficulties have given rise to electric wheelchairs which do not require any physical efforts from the user.

Electric wheelchairs address most of these issues because physical endurance and strength is not the major requirement for using them. It helps in commuting long distances by making use of energy stored efficiently in batteries which are also rechargeable[1]. In recent years, the use of electric wheelchairs has increased tremendously due to the advantages provided by them. Their costs have also been decreasing due to technical advancements in battery and motor efficiency and costs. Electric wheelchairs have two motorized wheels powered using a battery. They are controlled using a small joystick placed on the armrest which is generally operated using the user's thumb. Figure 1 shows a typical electric wheelchair along with the joystick used. Depending on the user's abilities and comfort, they can also be controlled using the user's chin or foot.

(a) An electric wheelchair

(b) A typical wheelchair joystick

Figure 1: An electric wheelchair with a joystick

The psychological impact that the use of an electric wheelchair has on specially challenged people is transcendental. It has a positive impact on the life of its users and improves their social participation. So it is very essential this is made accessible and usable to all specially challenged people who need them[2]. Electric wheelchairs require its users to control the joystick using precise movements. People suffering from cerebral palsy or those who have suffered spinal injury accidents are not usually capable of this level of control and precise movement. This issue prevents these users from operating an electric wheelchair and hence requires another person to help them to move from one place to another in a traditional wheelchair. Thus it is essential to develop a control system overcoming these limitations so that electric wheelchairs could become accessible and usable to these users.

2 Problems being addressed

Cerebral palsy (CP) is a chronic condition where people with the condition are unable to fully control muscles, body movement and coordination. The condition usually originates before birth or during infancy, often due to trauma or lack of oxygen to the brain. Cerebral palsy symptoms may include spasticity, muscle spasms, involuntary movements, seizures, disturbance in gait and mobility, as well as impairment of sight, speech and hearing. There are three different cerebral palsy types: spastic, ataxic, and athetoid or dyskinetic[3].

A spinal cord injury (SCI) is damage to the spinal cord that results in a loss of function, such as mobility and/or feeling. Frequent causes of spinal cord injuries are trauma (car accident, gunshot, falls, etc.) or disease (polio, spina bifida, Friedreich's ataxia, etc.). The level of injury to the spinal cord is helpful in predicting what parts of the body might be affected by paralysis and loss of function. Besides a loss of sensation or motor function, individuals with spinal cord injury also experience other changes[4].

People with cerebral palsy or spinal cord injury in several cases do not have a lot of physical strength or coordination. These abilities are required for operating the joystick of an electric wheelchair. Thus electric wheelchairs are not operable by many of these people and therefore they are deprived of an opportunity to go about their daily life with its assistance. The people under this bracket can only perform gross body movements in a coordinated manner. These gross motions also differ a lot as some could do only upper body movements, some lower body movements,

some only head movements and so on depending on the individual. Figure 2 shows the different control systems available other than the conventional joystick. Even these systems do not address the problems faced by people with cerebral palsy. Taking into account all these facts, the development of a solution to make electric wheelchairs usable to these people is necessary.

(a) T shape joystick

(b) Head Controller

(c) Wafer Board Controller

(d) Chin Controller

Figure 2: Various Control Systems for Electric Wheelchairs

To avoid any sort of injury to these people, wheelchairs made for them should incorporate adjustable backrests, footrests, etc. with ample cushioning and safety straps. These have to be necessarily implemented to specifically cater to these people. The product design and clinical team of R2D2 lab have also been consulted for any such specific requirements and the problems to be addressed have been listed down based on their inputs.

3 Solutions

Developing a solution to make electric wheelchairs involves coming up with a solution to sense the gross body movements that these users can perform. We need to come up with a control scheme which defines what movements performed by the user lead to what actions of the wheelchair. Since different types of these users can perform only certain specific movements in a controlled manner, sensory apparatuses capable of specifically measuring them is one approach. For example, for users capable of head movements distance sensors could be placed in different directions around the head to track its motion. For users capable of gross hand movements such as just lifting or lowering them, arm-bands with IMU's (Inertial Measurement Unit) and other motion sensors can be used to track its motion. The issue at hand is that the diverse cases require a non-exhaustive list of sensors and thus we need to take a different approach which broadly captures these different motions in a single manner. We can observe that in all of these motions the centre of mass of the user changes in different degrees based on the mass of the part moved and the degree to which it is moved. So if we could capture the change in centre of mass for all these different movements using a single sensory apparatus and calibrate it to the degree to which it will vary for an individual user then that would serve as an universal system for these brackets of people. The centre of mass position can be calculated by using a system of load cells with the number of load cells being 3 to determinately perform the calculation. It should be ensured that the entire weight of the user is directly transferred through the load cells directly.

To this end we have designed the Body Movement Wheelchair (BMW) - an electric

wheelchair which can be controlled using gross body movements without the need of a joystick. These wheelchairs are equipped with load cells placed at strategic locations under the seat to determine the user's body posture by identifying their weight distribution and thereby the centre of mass. This is then used to calculate the direction and speed of the wheelchair. To control this wheelchair, the user simply has to lean in the direction they want to move. These wheelchairs can be calibrated for each user according to their range of body movements and body posture for accurate control. On top of being a mobility device, this can also be used as a therapeutic device for rehabilitation.

We have designēd two variants of the wheelchair - one suitable for adults and the other for children. The pediatric version has been designed to be modular ensuring adequate postural support. Both the wheelchairs have been designed keeping in mind the safety and comfort requirements of the users. In the following sections, the detailed design process for the development of the wheelchair has been discussed.

4 Control System

The wheelchair control system has been designed so that gross body movements can be used for specifying the direction and speed of the wheelchair. This system works by identifying the body posture of the user by measuring the position of their Centre of Mass (COM) and based on this position, the wheelchair moves accordingly. For example, if a person leans forward, their COM would move to the front and this difference in the COM's position is measured and the wheelchair is commanded to move forward. Similarly, if the user leans backward the wheelchair is commanded to move backward. If the user leans to their left or right the wheelchair rotates

left or right respectively. For users who can only move certain specific body parts, the degrees of variation of COM (centre of mass) will be different and therefore the change of speed or direction based on COM variations should be calibrated accordingly.

To measure the position of COM of the user, three load cells are placed under the seat of the wheelchair. These load cells are placed at specific locations and based on the weight distribution amongst the load cells the COM's position can be calculated.

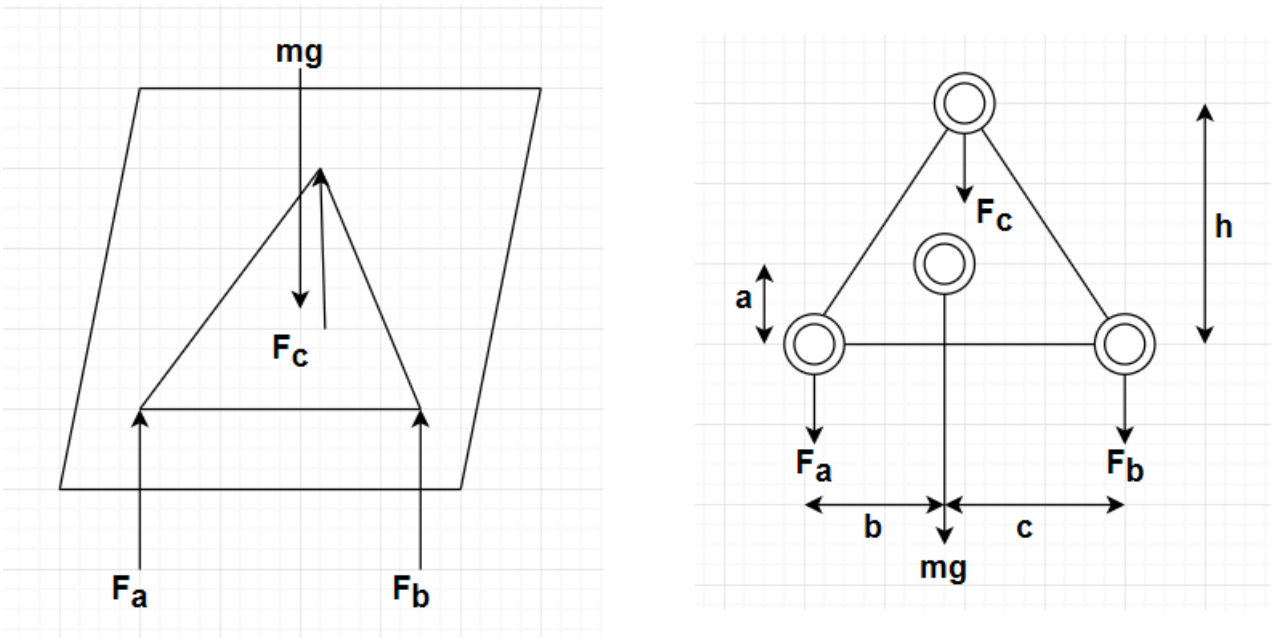

Figure 3: FBD for the wheelchair system

$$mg = F_a + F_b + F_c \tag{1}$$

$$mg * b = F_c * (b + c) \tag{2}$$

$$mg * a = F_c * h \tag{3}$$

There are 3 equations with 3 independent unknowns mg , b and a. F_a, F_b and F_c

are known from the load cell readings. h and $(b + c)$ are known from the CAD.

The above relations can be used to calculate the position of the COM. This system is sensitive to the body weight while determining the velocity of motion and hence needs to be calibrated for each user separately. This calibration also has to factor in the user's natural body posture and their range of body movements.

5 Mechanical Design

5.1 Adult Wheelchair

To ensure faster testing and ease of manufacturing, the adult version of the Body Movement Wheelchair has been designed using an existing Neofly wheelchair as the base. This ensured that we could develop and test the proof-of-concept prototype in a short time. The Neofly wheelchair is a manual wheelchair from Neomotion. To cater to the requirements of our device, we replaced the wheels with motorized hub wheels which could be powered using a 24 V battery. These wheels also have an electric braking system which ensures the safety of the user.

For load cell based control of the wheelchair, the entire weight of the user has to be transferred to the wheelchair frame through the load cells. This means that all the components that the user rests their weight on have to be coupled to the wheelchair frame entirely through the load cells. This is required to calculate the body posture accurately. To ensure this, we have designed the wheelchair such that the entire base of the wheelchair along with the backrest and footrest are fixed on top of the load cells. These load cells are then connected to the bottom of the wheelchair

that also consists of a special electronic box which houses the battery and all the other electronic components. Suitable modifications to the Neofly wheelchair have been made to accommodate these changes. Figure 4 shows the 3D model of the wheelchair.

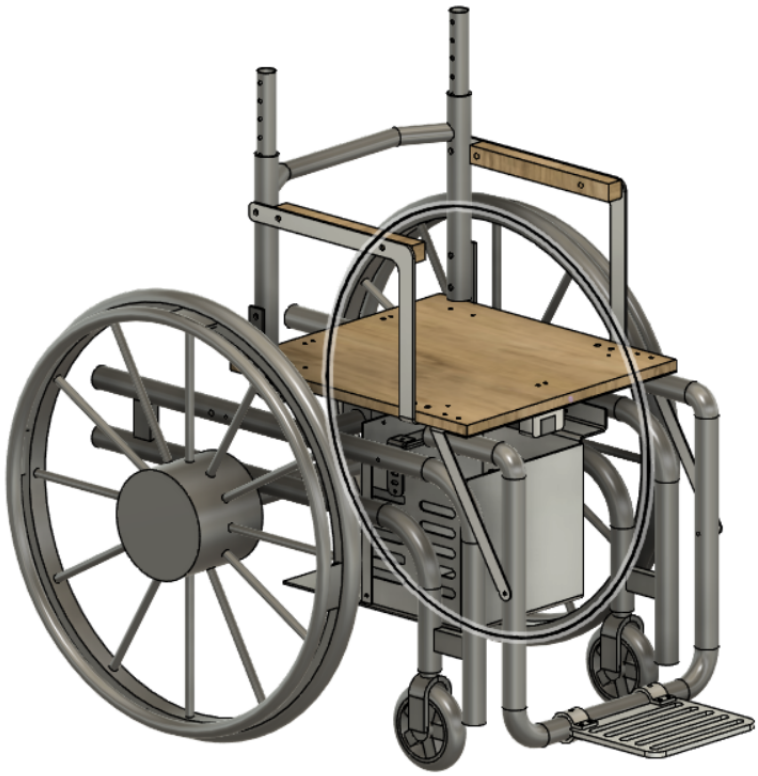

Figure 4: CAD model of the adult version of the wheelchair

5.2 Pediatric Wheelchair

The pediatric version of the wheelchair has been designed as a completely standalone version without using any old wheelchair as a base. The major aim of this version of the wheelchair was modularity, postural support and comfort for children along with the novel control system. This wheelchair is also meant to be used as a rehabilitation device for children. Keeping these objectives in mind, we have developed a modular electric wheelchair suitable for children between the ages of 6 - 18.

For this wheelchair, instead of using hub motorized wheels, we have used a pair of 250 W and 75 rpm rated 12V DC motors. This was due to the fact that hub motorized wheels were not available in smaller dimensions and also for economical reasons as the long term goal is to develop this as an affordable product. Modularity was ensured in the design. The backrest height and angle, footrest height, position of the headrest can be changed easily according to the user's comfort. These have been incorporated to aid the physical safety of the user while operating the wheelchair. Additional adjustable chest support plates have been included for postural support. Straps have been placed on the footrest and backrest to provide additional support to the user. Adequate cushioning has been added in the seat, under the thigh, arm rest, backrest and headrest.

The frame of the wheelchair is made of 18 mm OD (outer diameter), 14 mm ID (Inner Diameter) mild steel bent pipes which are welded together to form the frame of the wheelchair. A 15 cm diameter castor wheel has been identified for this and its bearing coupling is custom designed with the connector to the frame made of mild steel to facilitate welding to the frame. Motorised back wheels have been identified from Callidai Motor Works vendor and the coupling to the frame has been designed based on the CAD (Computer Aided Design) details shared by them. An electronics mount is designed in this frame below the seat using CNC (Computer Numeric Control) bent sheet metal plates to house the electronics of the wheelchair. A special casing has been designed using a thermoforming process to give the wheelchair a car like appearance to enhance the appeal to pediatric users. The casing parts have been designed for a 2.5 mm thickness with necessary drafts and clearances . Connectors to assemble them to the mainframe have also been custom designed.

Figure 5 shows the 3D model of the wheelchair

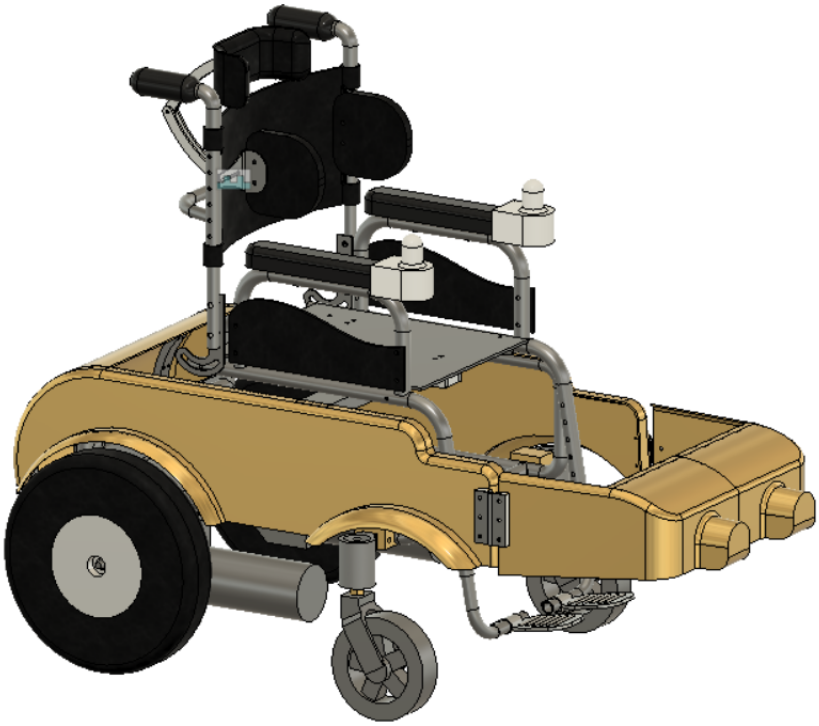

Figure 5: CAD model of the pediatric version of the wheelchair

The entire top portion of the wheelchair which includes the seat, armrest, backrest and footrest is attached to the bottom frame through 3 load cells placed under the seat. Most of the above components are made of 18mm OD, 14mm ID mild steel bent pipes. The seat is provided with a cushion made from PU foam and wire-cut to the required dimension providing support to the legs as well. The arm rest is welded to the base of the seat. The back rest is fixed to the base using a custom connector which enables angle adjustment of the backrest from -15° to +15°. The height of the back rest can also be set at multiple heights over a range of 100mm. The design ensures that the adjustments can be done in a hassle free manner. The back rest is covered using a fabric which provides additional support to the user and is provided with multiple straps to fully secure the user to the wheelchair. The chest support plates are also attached to the back rest. The head rest is connected

to the back frame of the wheelchair through a 4 bar linkage. This enables the head rest to adjust along 2 DOF enhancing the comfort of the user. The foot rest is also made adjustable in a similar fashion. .

5.3 Description of the Parts

5.3.1 Base Frame

Figure 6: CAD model of the base frame

The base frame is the central part of the wheelchair to which all the other parts are connected. The footrest is attached at the bottom and the backrest is attached behind. It consists of 3 hollow mild steel pipes. The two legs of the frame are connected through a connecting pipe by welding. The legs of the frame have multiple holes to fix the footrest at the appropriate height as per the convenience of the user.

5.3.2 Back Frame

The backrest has been designed to be adjustable and modular. Two pipes attached to the base frame on either side through an adjustable support, manufactured

through laser cutting, which can be adjusted to tilt the backrest upto an angle of 15 degrees. Two pipes of larger diameters can then slide over the existing pipes along the sides. These pipes can be fixed at various heights depending on the user's requirement. They are connected through a connecting pipe using welding. Two handles are attached to the end of the backrest to facilitate the caregiver to easily maneuver the wheelchair. A custom designed fabric with additional straps and supports has been manufactured as a back support.

Figure 7: CAD model of the back frame

5.3.3 Chest Support

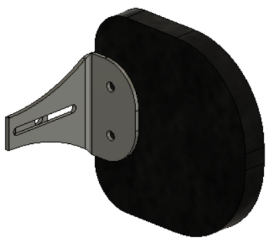

Figure 8: CAD model of the chest support

The chest support ensures that the child maintains the correct posture while seated on the wheelchair. It consists of a 4mm aluminium part manufactured using laser

cutting and CNC bending. This acts as the support to which a CNC cut foam is attached as a cushion. The entire assembly is fixed to the backrest and it can be adjusted horizontally. The chest supports are provided on both sides and can be adjusted independently.

5.3.4 Armrest

Figure 9: CAD model of the armrest

The arm rest has a U-shaped bent pipe as its base to which a foam support is attached. This is then welded to the base frame. The arm rest is currently not adjustable but future iterations would include an adjustable arm rest as well.

5.3.5 Footrest

The footrest has a bent pipe which slides into the base frame and can be fixed at multiple locations. The end of the footrest has a foot pad. The foot pad is welded to a mount which is attached to the footrest using a fastener. The angle of the footrest can also be adjusted by loosening the fastener.

Figure 10: CAD model of the footrest

5.3.6 Headrest

Figure 11: CAD model of the headrest

The headrest assembly is connected to the connecting pipe of the backrest. It has laser cut aluminium plates as its arms and a foam headrest is attached at the end of the arms. This is assembled to the back rest using a mount and a fastener similar to the footrest. The angles of the arms can be adjusted to change the position and orientation of the headrest.

5.3.7 Seat

The seat is a custom wire cut foam which has extrusions to support the thighs. This is placed over an aluminium plate attached to the base frame using L clamps.The seat is also connected to the three load cells and thus the entire weight of the top portion of the wheelchair along with the user is transferred to the load cells through the seat.The seat is a custom wire cut foam which has extrusions to support the thighs. This is placed over an aluminium plate attached to the base frame using L clamps.The seat is also connected to the three load cells and thus the entire weight of the top portion of the wheelchair along with the user is transferred to the load cells through the seat.

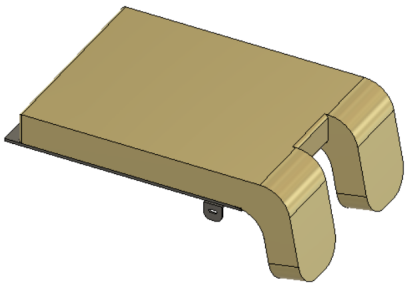

Figure 12: CAD model of the seat

5.3.8 Bottom Assembly

The bottom assembly functions as the unit which connects the weight bearing upper assembly to the mobility system of the wheelchair constituted by the motorised wheels at the back and the castor wheels at the front. The upper assembly is connected to the bottom assembly through load cells which functionally measure the weight distribution of the upper assembly. The bottom assembly also houses the electronics and the battery of the wheelchair. It can fundamentally be analysed as two components: the bottom frame and the bottom plate.

5.3.8.1 Bottom Frame

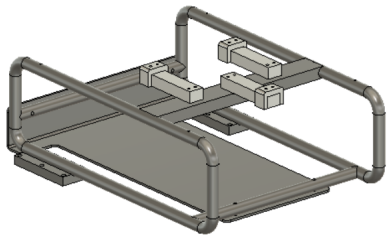

Figure 13: CAD model of the bottom frame

The bottom frame is constituted of 4 U-shaped bent pipes, 2 straight pipes, 1 flat box channel; all made of mild steel.The Vertical Loops on the side are split into 2 U-shaped bent pipes on each side and welded together. There are two horizontal pipes at the front and back which are welded to the side loops. The top flat box channel is made such that the flat surfaced load cells can be placed on them with maximum surface contact and coupled with bolts. This box channel is also welded to the bottom frame.

5.3.8.2 Bottom Plate

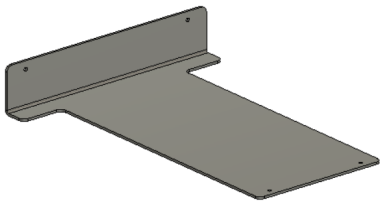

Figure 14: CAD model of the bottom plate

The bottom plate houses the electronics and the battery of the system. This is a 4mm Laser Cut and CNC bent part which is coupled to the bottom frame

to constitute the bottom assembly. Adequate space has been provided to make attachments to mount the battery and the electronics.

5.3.9 Back Wheels

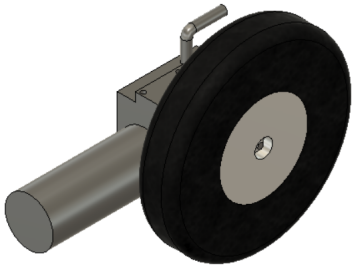

Figure 15: CAD model of the wheel assembly

The back wheel is a motorised wheel and is coupled to the bottom assembly through the motor attached to it. The designed wheel has a diameter of roughly 320 mm. The motor is attached to the bottom assembly to a machined motor mount through fasteners, which in turn is welded to the bottom assembly. This is as per the original design. Temporarily, an available motor and wheel has been implemented for now without disturbing the whole assembly.

5.3.10 Front Castor Wheels

The front castor wheel is a 150 mm diameter castor , which is coupled to the bottom frame through a cylindrical coupler with an extension through welding. The revolute joint between the front wheel and the cylindrical part is constructed with the use of bearings and a threaded shaft. This joint is locked translationally through the use of nuts and steps

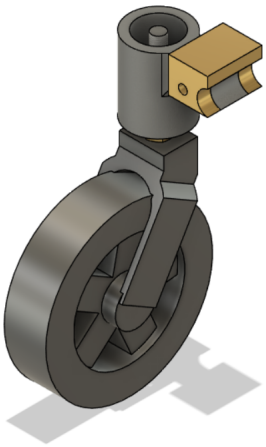

Figure 16: CAD model of the castor wheels assembly

5.3.11 Casing

The Casing of the bottom assembly is done to cover the electronics, battery and other components and also to give a form to the device and for aesthetics. It was designed to be implemented through thermoforming plastic sheets of 2.5 mm thickness. The casing comprises four components: the front casing, left and right casing and the back casing. The casing on the whole has been designed to look like a car as the target users are pediatric. Draft angles have been given everywhere appropriately.

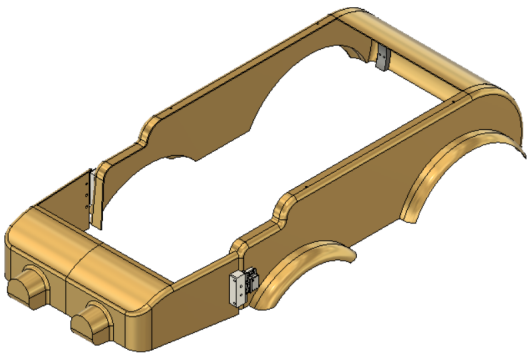

Figure 17: CAD model of the casing

5.3.11.1 Front Casing

The front casing is designed to have the look of the front bump/nose of the car and the contours have been designed in such a way that it conforms to manufacturability through thermoforming and also looks like how it is intended to be. There are two front protrusions which resemble the headlights of a car. This is attached to the right casing through a hinge and the left casing through a modular lock. The modular lock can be released and the front casing can also be opened like a door. This has also been designed providing adequate leg room to the user.

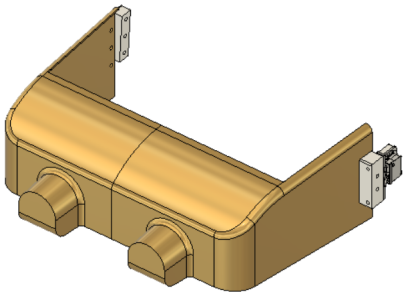

Figure 18: CAD model of the front casing

5.3.11.2 Left Casing

The left casing is attached to the upper U-shaped pipes of the bottom frame through fasteners on the left hand side. This has two circular contours to cover around the two wheels as in a car. This makes as much surface contact to the bottom frame as possible. It also has holes for the coupler part to the front casing.

5.3.11.3 Right Casing

The right casing is just a mirror image of the left casing except for the holes for the coupler part. It instead has holes for the hinge to the front casing.

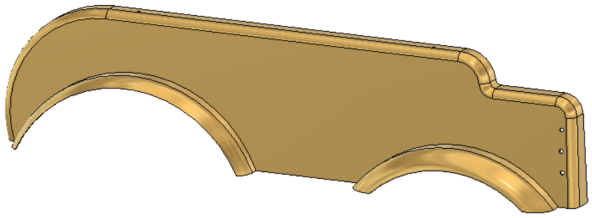

Figure 19: CAD model of the left casing

5.3.11.4 Back Casing

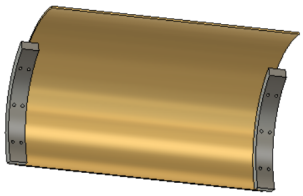

Figure 20: CAD model of the back casing

The Back Casing is just a sheet of an arc section for covering the back portion of the wheel chair like the hatchback of the car. It is coupled to the left and right casing through 2 3D-printed connectors.

6 Simulation Studies

Simulation studies using Autodesk Fusion 360 have been performed on both the wheelchairs to ensure structural stability and safety for both static and dynamic loads. Based on the results of these studies, appropriate modifications have been made to the designs ensuring safety and integrity of the wheelchairs. The final results have shown that the wheelchairs have an adequate minimum factor of safety of 3.034 under static load conditions. Impact studies have also been performed.

Figure 6 shows these results.

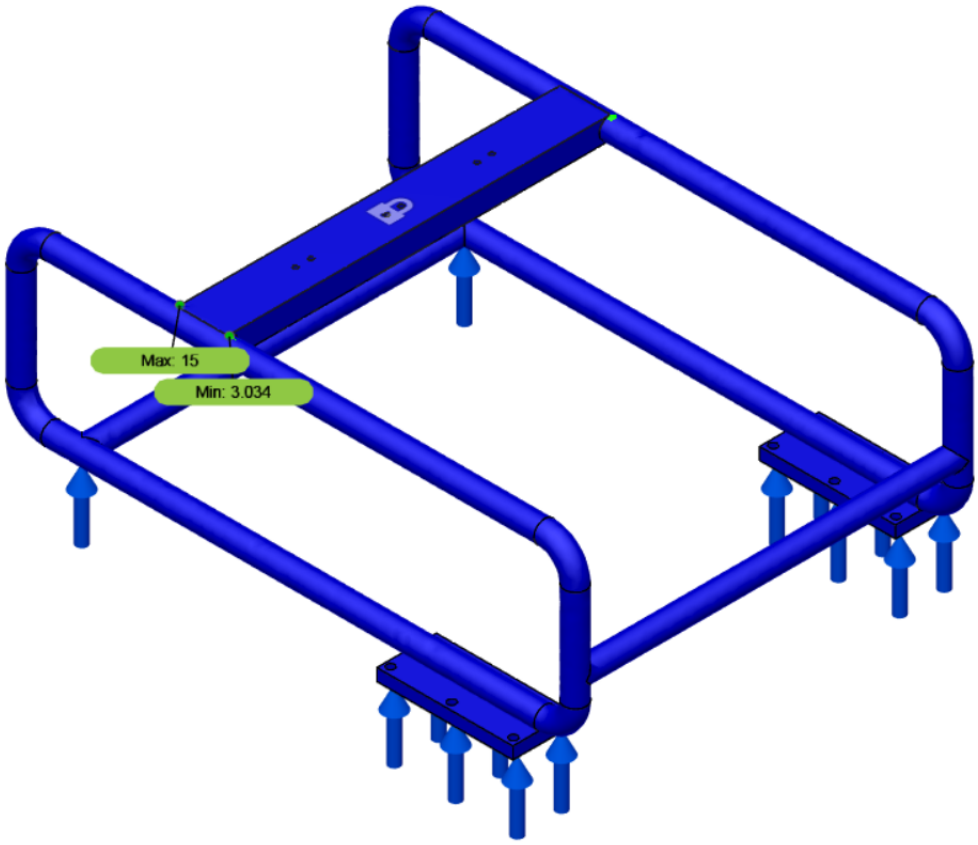

Figure 21: Simulation results on the wheelchair frame

7 Electronics

The electronic architecture has been developed for robust control and safety. The architecture is common for both the adult and pediatric case except for the choice of motors. The entire system is powered using a AMARON Quanta SMF 42AH/12V Battery. The motors are controlled using Cytron MDD20A motor drivers. A Raspberry Pi (RPi) is used as the CPU for the entire control system which requires a 5V power supply. To meet these different requirements, buck converters have been used to power all the devices using the single battery. The load cells and the motor drivers are connected to the RPi. The load cells provide the load weight readings

to the RPi which then calculates the position of the COM and gives appropriate signals to the motor drivers that then run the motors. Thus the wheelchair moves in the specified direction. All the electronics are housed in a special electronic box for easy access and debugging. Modular connectors are also used for all motor connections. Additionally, a kill switch is used to cut off the power supply entirely to stop the wheelchair in case of emergencies.

The motors are the primary difference between the adult wheelchair and pediatric wheelchair. In the adult wheelchair 24 V DC Hub motors controlled by a joystick had to be used as it was what was already available in the R2D2 lab for the purpose of a prototype of our load requirements. It was quite a challenge running them directly using a raspberry pi as it was designed to be operated using the joystick provided. As there was no direct documentation available online on what input to feed directly to the motors terminals to run them, the joystick had to be operated and the voltage differences between the different terminals had to be measured using a multimeter while connected to the joystick for different directions of movement. This was noted down and the same input was replicated by the raspberry pi using Switched Mode Power Supply (SMPS) for commanding the system to move in a specific direction. For the pediatric version the motors used are rated 250 W and 75 rpm rated 12V DC and can be controlled in a straightforward manner by using the motor drivers. Figure 7 shows the electronics setup.

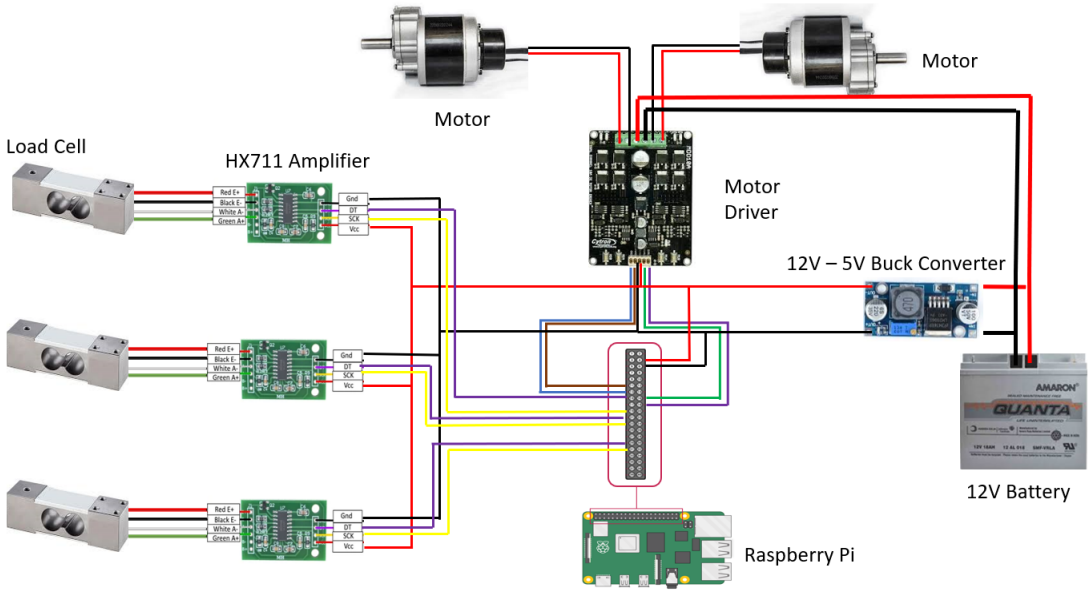

Figure 22: Electronics Layout

8 Conclusions and Future Work

The CAD design for the adult wheelchair was completed with constant feedback from design experts and simulations. Based on their feedback changes were incorporated in the design. Anthropometric data was used to decide several crucial design dimensions. The parts of the adult wheelchair were manufactured and assembled together using the manufacturing resources from the institute and also with the help of vendors outside. The electronics framework was set up on the adult wheelchair version and was kept ready to start testing. Due to the onset of the pandemic the testing could not be taken forward and hence the focus was redirected to making design improvements in the meantime.

After these improvements were made, the focus was reoriented to developing a pediatric version targeted at pediatric users falling under the same umbrella and also in a complete product development approach with a goal to make more units of

the same after testing. Along with taking inputs from design experts, simulations and anthropometric data design inputs were further made using the consultation of product design and clinical experts. The complete design has been manufactured and assembled together.

Full scale testing of the pediatric wheelchair has to be taken forward with the help of volunteers and the different aspects of the wheelchair have to be redone based on their feedback and new solutions should also be considered based on this. After this has been done the next focus of the project should be on cost cutting to reproduce many units of the wheelchair at an affordable cost to make it accessible to many users. Modifications have to be made in parallel to give a full product look. Versions of this prototype have to be beta tested with users and a final version is to be hence built and made available to the consumers.

9 Acknowledgements

We would like to thank Dr Sujatha Srinivasan for graciously giving us the opportunity to work on this project and guiding us through the journey with her inputs and the resources of the R2D2 Lab. We would like to thank Mr Vivek Sarda for teaching several product design inputs and guiding us besides also setting the foundation for this project through his Bachelor's Project. We would like to thank Mr Swastik and Neomotion for providing a Neofly wheelchair during our initial phase when we were working on our first prototype. We would like to thank Dr Javeed for helping us to refine our approach through several meetings during the project. We would like to thank Ms Mounika and Mr Vignesh for helping us with the manufacturing face of the project when we couldn't be in the institute to directly work

on it due to the ongoing COVID pandemic. We would like to thank Mr Praveen for facilitating the project related expenses. We would like to thank Mr Samson and the Lab's biomedical team for providing us with inputs when we had certain queries regarding the project. We would like to thank all the members of the R2D2 Lab for helping us in many ways while we had the chance to work in the Lab before the pandemic. Lastly we would like to thank our Institute, Indian Institute of Technology Madras for making this all possible.

10 References

1. https://mobilitypluswheelchairs.co.uk/blogs/news/5-benefits-of-an-electric-wheelchair

2. https://www.mdpi.com/2227-7080/7/4/73/htm

3. www.quantumrehab.com/resources/consumer-article-power-wheelchairs-for-cerebral-palsy.asp

4. https://www.shepherd.org/patient-programs/spinal-cord-injury/about#\protect\leavevmode@ifvmode\kern+.2222em\relax~\protect\leavevmode@ifvmode\kern+.2222em\relaxtext=A%20spinal%20cord%20injury%20(SCI,Friedreich's%20ataxia%2C%20etc.)

Appendix

A Assembly Drawings

A.1 Main Assembly

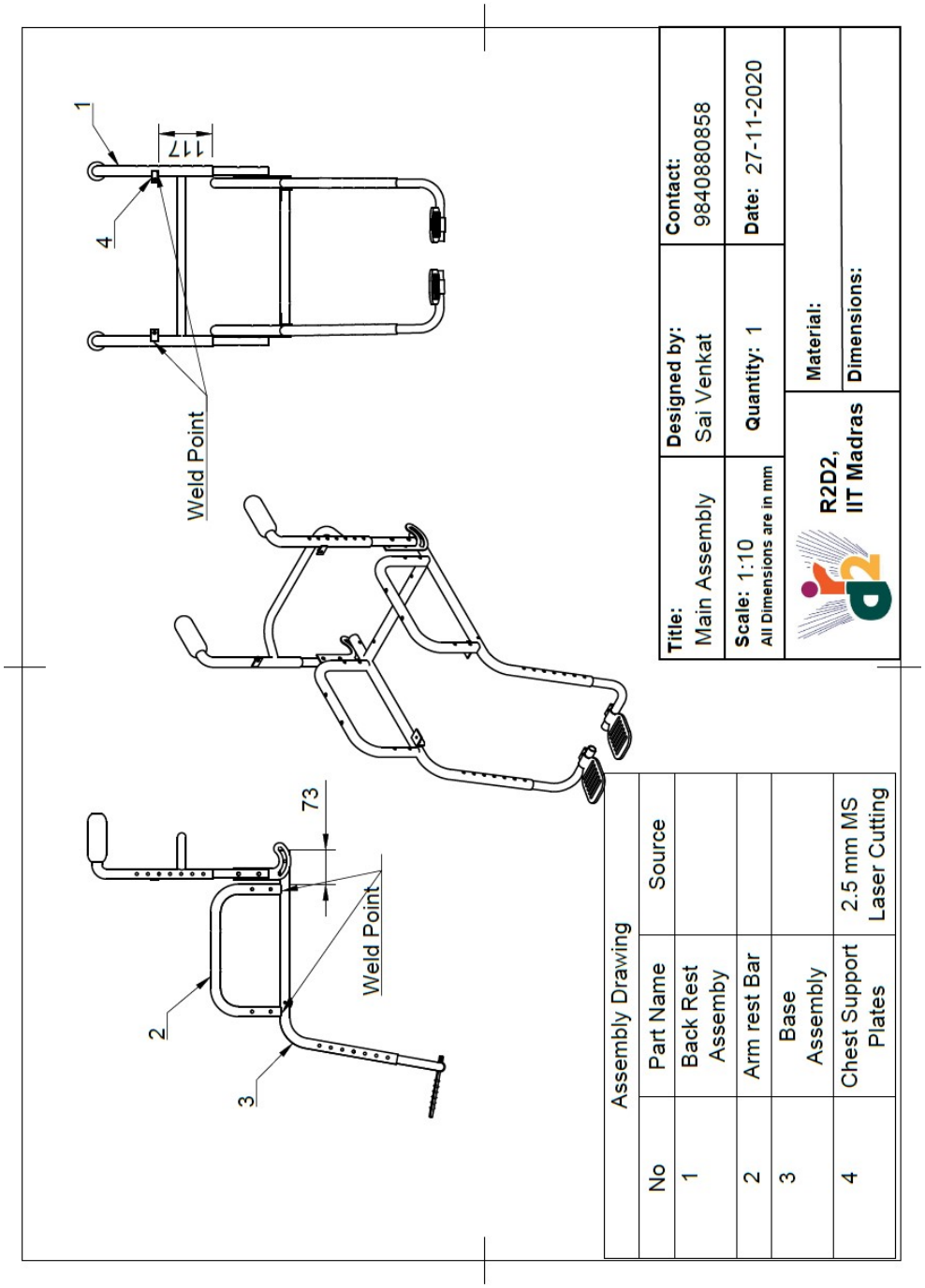

Figure A.1: Main Assembly Drawing

A.2 Back Rest Assembly

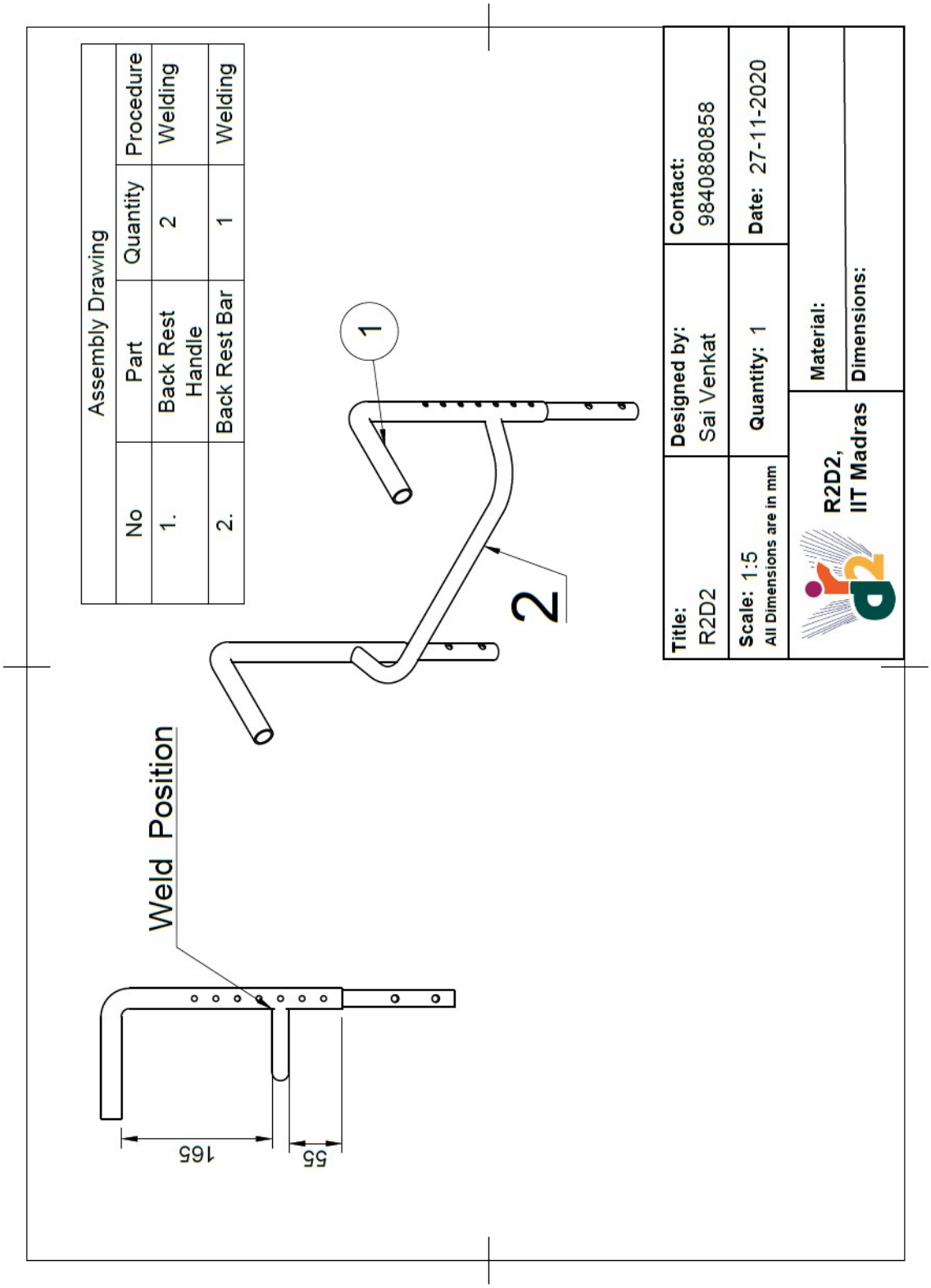

Figure A.2: Back Rest Assembly Drawing

A.3 Base Assembly

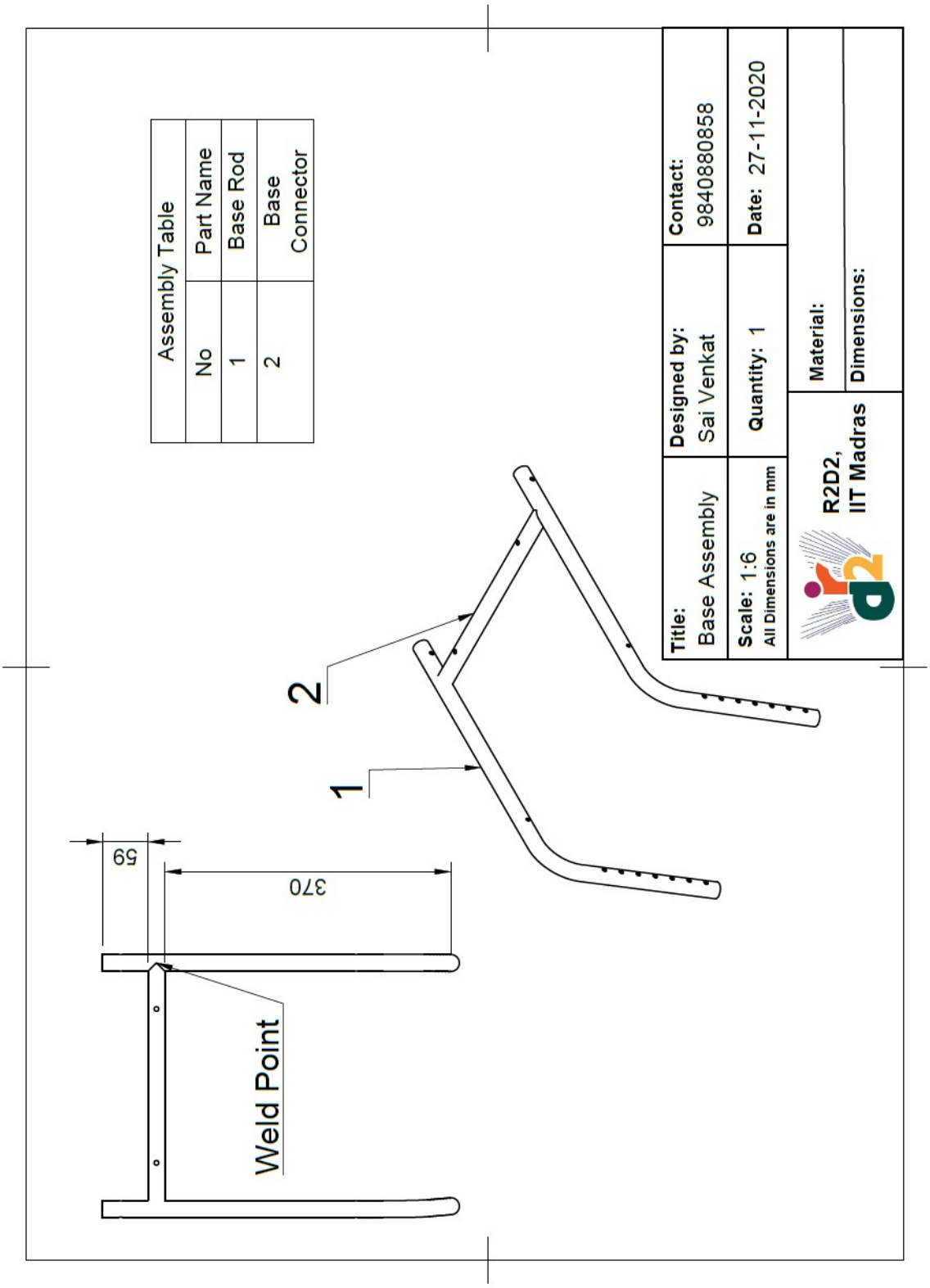

Figure A.3: Base Assembly Drawing

A.4 Frame Assembly

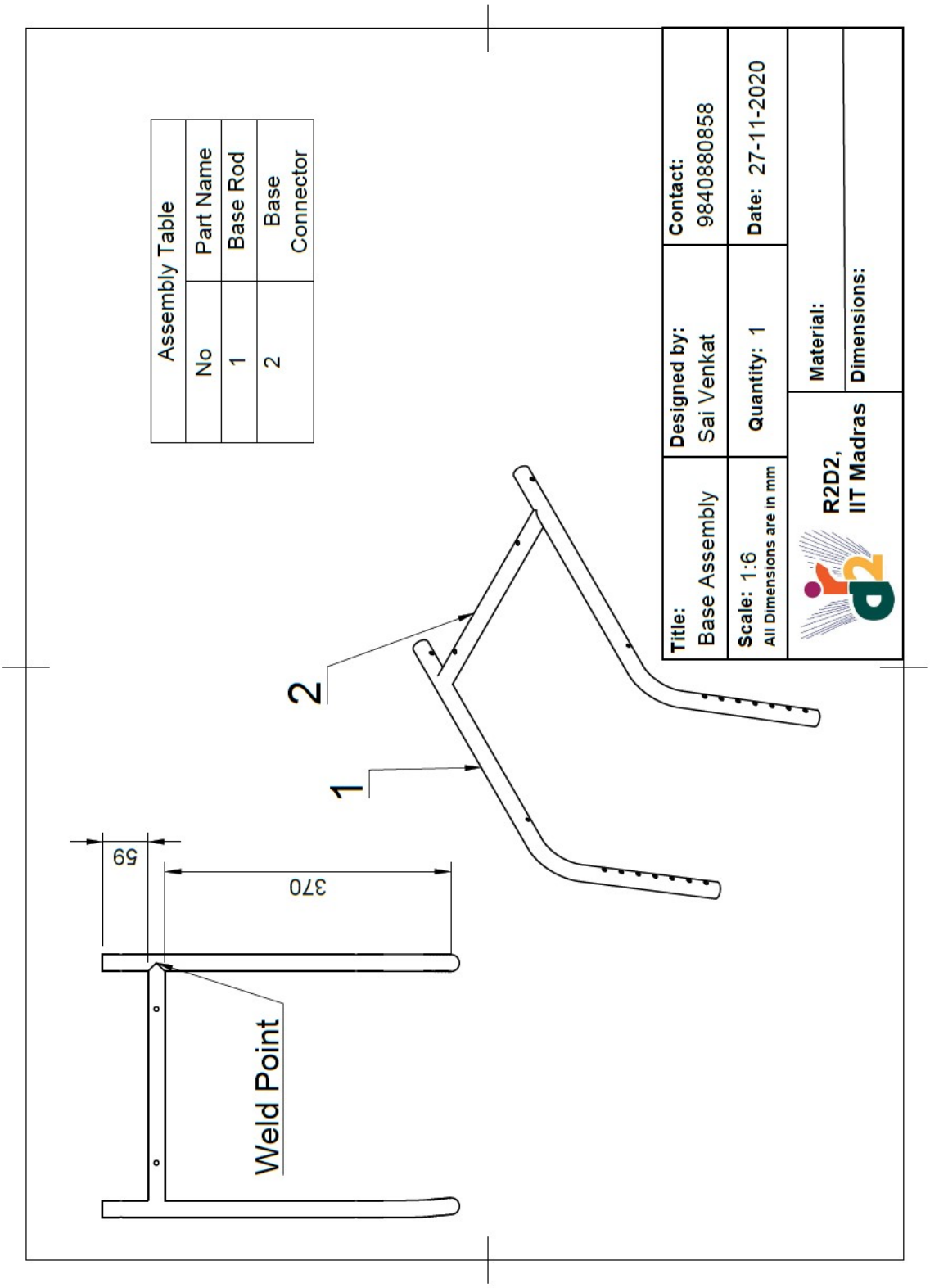

Figure A.4: Frame Assembly Drawing

B Individual Part Drawings

All the individual part drawings can be found by following this link

`https://bit.ly/35V5Qv7`

C Requirements

C.1 Overview

Part Name	Requirements	Requirement - Detail	Solution options
Overview	Load Cell Based Control	Efficient and Optimised Mounting and Calibration	To be implemented in Code and through Accurate Sensors
	Design Aspects	Detailed Manufacturing Tolerances.	During Design
		Pediatric User Dimensioning	To be Measured
		Weight Conscious Material Selection	Use of MS rods and 3D printing wherever possible
	Testing	Plan for User Trial and Feedback to be made.	
	Safety Functionality	1. Guardian Override and also User Override. 2. Obstacle Detection and Avoidance 3. SOS button	

Overview	Manufacturability Aesthetics Cost	Should Involve methods for Scalable Multi-Unit Manufacturing Good Coloring and Look for Pediatric User Appeal Below INR 20,000	
	Terrain-Adapting Functionality	Code Functionalities along with required Sensors to be Incorporated	

C.2 Wheels and Motors

Part Name	Requirements	Requirement - Detail	Solution options
Wheels and Motors	Dimension	Should be adapted to Pediatric Requirement	Available dimensions - 12” - 24”. Hub motor or normal motor plus wheel placement (TBD)
	Power & RPM		RPM should be controllable between 5-10 kmph. Power around 500W(TBD)
	Coupling	Modular Requirement for Quick Debugging during Development	Use of compatible wheels and motors for painfree coupling.
	Reliability	Should be functional on all required Terrain and should be Less Maintenance	

C.3 Sensors and Electronics

Part Name	Requirements	Requirement - Detail	Solution options
Sensors and Electronics	Reliable Load Cells and Amplifiers	Intensive Calibration Required	To be bought online
	Distance Sensor for Proximity	Viable Effective Positions on the wheelchair to be Scouted	”
	Potentiometers	To check battery levels	”
	Wifi / Bluetooth Module	For Guardian Override	”
	RPi	Main processor for the entire wheelchair.	”
	IMU	For wheelchair orientation sensing on varied terrain	To be bought online

C.4 Circuit Design

Part Name	Requirements	Requirement - Detail	Solution options
Circuit Design	Circuit Breakers for Safety and Overriding Functionality	Direct Access to RPI for Override	
	GCB Spacing	Insulation Required	
	Easy Debugging	Use of LED's to make debugging easier	
	Simulation	Can be run during Lockdown	

C.5 Code Functionalities

Part Name	Requirements	Requirement - Detail	Solution options
Code Functionalities	Terrain Adaptive	Should sense Slope along any direction in Surface and appropriate corrective action to be taken on Drive Parameters	
	Decision Hierarchy	Proper Hierarchy to be Defined to prioritize the order of considering different sensor readings.	
	Braking	Gradual Stopping of the Wheelchair triggered by a button besides the Emergency Stop Button	
	Modular Code	For Easy Debugging and Efficient User Experience	

C.6 Wheelchair Body

Part Name	Requirements	Requirement - Detail	Solution options
Wheelchair Body Linkage Design	Dimensions	Catered to Pediatric Needs	Standard dimensions of a pediatric wheelchair to be used
	Manufacturing	Repeatabillity to be considered	
	Handles	Handles for other people to move the wheelchair.	To be incorporated in design
	Anti - Toppling	Supports can be installed to avoid Toppling in the Backward Direction	Low CG, Wider Base could be wmployed
	Horizontal Support Rods	1. Positioned to allow space for and also designed with features for mounting of the Electronics System. 2. Also Custom Designed for the stable mounting of Load Cells 3. Extensive Simulation Required	

C.7 Seating

Part Name	Requirements	Requirement - Detail	Solution options
Seating	Cushion/Sling Seat	Decision based on the users preference	
	Design Considerations	Appropriate dimensions have to be maintained like cushion angle, foam thickness etc	
	Stability	Should be very stable without any vibrations during movement	To be handled during designs and simulations
	Comfort and Pressure Relief	Should be comfortable without causing any pressure sores	Should be according to design guidelines
	Thigh Support	Straps for supporting thighs of user	To be incorporated during design

C.8 Back Rest

Part Name	Requirements	Requirement - Detail	Solution options
Back-Rest	Design Considerations	Back Angle	To be adjustable between 0 - 10 degrees
		Height Adjustability of Back Rest	Can be designed using rods with multiple holes
		Attachment with the base	To be taken care during design
	Postural Support	Should be able to provide necessary postural support	Appropriate back angle to be used according to the user
		The spine should be in the natural position	”
	Back Angle Adjustability	Design to ensure adjustable back angle	Use of something like in adult BMW we designed
	Back Support	Necessary straps and their placement to support the torso prevent from falling	To be incorporated during design

C.9 Arm Rest

Part Name	Requirements	Requirement - Detail	Solution options
Arm-Rest	Design Considerations	Arm Rest Height	Standard dimensions to be used
		Arm Support Width	”
	Arm Support Material	Should be hard with smooth finish	Rubber or PU to be used

C.10 Foot Rest

Part Name	Requirements	Requirement - Detail	Solution options
Foot-Rest	Design Considerations	Foot Rest Angle	60-90 degree range
		Ground Clearance	Around 10 cm
		Attachment to the frame	Modular attachment to be designed
	Calf Straps	Could feature calf straps to hold the feet	Design
	One Time Adjustment	Should be able to adjust depending on the user for the first time which then can be fixed	Design

C.11 Electronics Housing

Part Name	Requirements	Requirement - Detail	Solution options
Electronics Housing	Prevent short circuits	PCB's and the husing should be properly insulated	
	Strength	Should be able to handle the weight of batteries	
	Aesthetics	Should have a good look overall	
	Placement of electronics	All components to be rigidly fixed to the box to prevent unwanted movements	
	Accessibility and modularity	Should be easy to access the electronics for debugging	
		Modularity to ensure easy replacememt of components	

C.12 Postural Support

Part Name	Requirements	Requirement - Detail	Solution options
Postural Support	Addition of features	Should be able to add additional features as and when required depending on the user	Design
	Neck and Head Support	If needed, should be able to add straps and slings to backrest to support the neck and head	”
	Upper Body Support	Straps to the back rest to maintain normal posture	”
	Leg Support	Additional support to the thighs and feet to prevent slipping	”

C.13 Battery

Part Name	Requirements	Requirement - Detail	Solution options
Battery	Capacity	Day Long Charge Capacity Required	42Ah batteries
	Charging	Easy Portable and Quick Charging	