Design and Implementation of a High-Dynamic-Range Digital Lux Meter for Photographic Exposure Control

Armaan Nalli
UTA ID: 1001935570

Kazi Md Waliul Azim
UTA ID: 1001935408

***Abstract*—This report presents the design and implementation of an embedded digital light meter "NanoLux" for photographic exposure measurement, based on the Arduino Nano ESP32 microcontroller and the TSL2591 high-dynamic-range ambient light sensor. The system addresses well-documented limitations of smartphone-based metering applications, which have been shown to exhibit significant measurement variability due to their reliance on uncalibrated camera-based sensing rather than dedicated hardware. In addition, many professional-grade mobile metering applications impose recurring subscription costs of $20–$40 per year, creating an economic barrier for students and hobbyists engaged in film photography.**

The proposed system employs a dedicated I2C-based sensor architecture. Custom MicroPython firmware performs real-time logarithmic computation of Exposure Value (EV) from raw lux measurements, and supports aperture-priority and shutter-priority metering modes consistent with established photographic practice. While formal calibration against a reference instrument is beyond the scope of this work, the design prioritizes transparency in the photographic translation layer—documenting the mathematical models, gain staging logic, and firmware architecture—to address an identified gap in existing open-source and academic implementations.

I. Introduction

Lighting is a fundamental pillar of photography. The difference between a mediocre capture and a high-quality image often lies in the precise management of illuminance. Accurate light measurement is essential for determining exposure settings—specifically the relationship between ISO, aperture, and shutter speed—to ensure that a scene is rendered with the intended detail and tonal balance.

A light meter (lux meter) is an instrument used to measure the intensity of light, either incident on a subject or reflected from it, and translate this measurement into actionable exposure parameters. In the era of traditional film photography, light meters were indispensable for achieving correct exposure. While modern digital cameras incorporate sophisticated through-the-lens (TTL) metering systems, a significant portion of the photographic community continues to use analog or vintage cameras that lack built-in metering capabilities.

For these users, existing solutions are limited. Dedicated handheld light meters are often expensive and bulky, while smartphone-based applications provide a more accessible alternative but introduce technical and economic drawbacks. Professional-grade mobile applications frequently rely on subscription-based pricing models, with recurring costs exceeding $20–$40 per year. Moreover, as demonstrated by Vujica Herzog et al. (2022), such applications can exhibit significant reliability limitations due to the absence of calibrated, dedicated ambient-light sensing hardware.

In parallel, there has been a resurgence of interest in film photography among students and hobbyists. However, the increasing cost of film stock and development further restricts access to essential auxiliary equipment such as light meters. This trend has increased the demand for accessible, low-cost metering tools that do not compromise technical transparency or measurement integrity. Although open-source hobbyist implementations exist, they are typically characterized by limited documentation of firmware logic and a lack of clearly defined photographic translation methodologies, thereby limiting their reproducibility and educational value

This project presents the design and implementation of a dedicated embedded light meter built around the Arduino Nano ESP32 (ESP32-S3) platform and the TSL2591 ambient light sensor. The device incorporates a 128×64 pixel SSD1306 OLED display for real-time output and a Keyes KY-040 rotary encoder for interactive menu navigation. The firmware, written in MicroPython, performs real-time computation of Exposure Value (EV) using the standard incident-light calibration formula and supports both aperture-priority and shutter-priority metering modes. The system operates as a fully standalone device powered from any 5V USB source.

A primary objective of this work is transparency. Unlike many existing open-source implementations, this report explicitly documents the mathematical models underpinning the photographic translation layer, including the lux-to-EV conversion, gain staging and saturation handling, and the discretization of computed exposure values onto standard photographic scales. The contribution of this work lies instead in providing a reproducible, well-documented, and cost-effective framework for photographic light metering on embedded hardware.

The remainder of this report presents a brief review of existing literature on light metering techniques and mobile-based solutions, the system architecture of the ESP32-based system, and the software methodology used to convert raw lux measurements into practical photographic exposure settings. By integrating modern embedded systems design with

Identify applicable funding agency here. If none, delete this.

established photographic principles, this work aims to deliver a cost-effective, reliable, and technically robust alternative to existing consumer-grade solutions.

II. Literature Review

The development of digital light measurement systems has progressed from simple analog photodiode circuits to sophisticated embedded architectures capable of sub-lux resolution. Despite this technical maturity, the majority of existing work addresses illuminance measurement as a general industrial problem, with comparatively limited attention given to the photographic translation layer—the firmware and mathematical mechanisms required to convert raw sensor data into standardized photographic parameters. This section reviews the relevant literature across four areas: embedded sensor implementations, I2C communication integrity, smartphone metering limitations, and existing hobbyist designs.

A. Embedded Implementations and Sensor Accuracy

Recent research has explored the feasibility of low-cost microcontroller-based systems for precise illumination sensing. Wibawa et al. demonstrated that an Arduino-based implementation utilizing an EL7900 photodiode achieved an accuracy of 99.48% when calibrated against industrial reference instruments [1]. Their work validated the applicability of the inverse square law ($E = I/r^2$) in embedded sensing contexts and established that low-cost platforms can achieve near-professional linearity under controlled calibration conditions.

However, their work focuses exclusively on linear lux measurement and does not address the logarithmic scaling or exposure discretization required for photographic applications. The present project draws on the same hardware accessibility demonstrated by Wibawa et al. but extends the scope to include real-time EV computation and interactive priority metering, while explicitly acknowledging that no equivalent calibration study has been conducted for this implementation.

B. Protocol Optimization and Signal Integrity

Kore et al. investigated high-precision I2C-based sensor architectures, emphasizing the critical role of pull-up resistor selection, bus capacitance management, and termination strategy in maintaining signal integrity at the sub-lux level [**?**]. Their work is directly relevant to the dual-device I2C topology employed in this project, where the TSL2591 light sensor (address 0x29) and the SSD1306 OLED display (address 0x3C) share a common bus operating at 100 kHz.

Software-defined pull-ups on the ESP32 GPIO pins were used in this implementation; future work could benefit from the external resistor optimization strategies described by Kore et al. to improve bus stability under varying load conditions.

C. Smartphone Limitations and Economic Barriers

Modern smartphone-based light metering applications offer a convenient alternative to dedicated hardware; however, their reliability is constrained by fundamental hardware limitations. Vujica Herzog et al. conducted a comparative evaluation between smartphone applications and professional instruments (e.g., Testo 435), concluding that mobile solutions exhibit significant variability due to the absence of calibrated ambient light sensors and reliance on camera-based estimation algorithms [3].

In addition to technical limitations, many professional-grade mobile applications adopt subscription-based pricing models, with recurring costs exceeding $20 per year. This introduces a non-trivial economic barrier, particularly for students and hobbyists who already face rising costs in film photography and development.

D. Hobbyist Implementations and Technical Documentation

A substantial number of open-source hobbyist light meter implementations exist, commonly employing sensors such as the BH1750 or TSL2591 in conjunction with Arduino Nano or similar microcontrollers. While these projects effectively demonstrate the accessibility of digital light sensing, they are typically limited in scope and transparency. Most provide raw lux readouts without documenting the mathematical models used to derive exposure parameters, and few include rigorous gain staging logic, saturation handling, or validated calibration data. As a result, such implementations function largely as demonstrative prototypes rather than reproducible engineering tools.

The present work shares the accessibility and low-cost ethos of these hobbyist designs while explicitly addressing their documentation shortcomings. The firmware architecture, EV computation pipeline, gain-staging logic, and exposure-discretization methodology are fully documented in the following sections, enabling reproducibility and providing a reference implementation for future work in this area.

E. Identified Research Gap

Across the reviewed literature, a consistent gap is evident: while embedded lux measurement has been well characterised at the sensor and communication levels, the photographic translation layer remains largely undocumented in both academic and open-source contexts. Specifically, the mathematical and firmware mechanisms required to convert high dynamic range illuminance data into standardised photographic parameters—including Exposure Value (EV), f-number, and shutter speed—have not been transparently described or validated against established photographic standards in any reviewed work. Commercial exposure meter manufacturers treat these algorithms as proprietary, further limiting academic reproducibility.

This work directly addresses that gap. Through a transparent hardware-software co-design implemented on the Arduino Nano ESP32 platform, the proposed system provides a fully documented framework for photographic light metering—from raw sensor acquisition through gain staging, logarithmic EV computation, and interactive priority metering—intended to serve as a reproducible reference for future embedded photographic instrumentation.

III. System Design

The system is composed four hardware subsystems — the Arduino Nano ESP32 microcontroller, the TSL2591 light sensor, the SSD1306 OLED display, and the KY-040 rotary encoder — interconnected via a shared I2C bus and a MicroPython firmware stack. The following subsections describe each layer of the design.

A. System Architecture Overview

The overall system follows a sense–compute–display pipeline. During each measurement cycle, the TSL2591 sensor acquires raw photodetector data, which the ESP32 firmware processes to obtain an illuminance value in lux. This measurement is subsequently transformed into a logarithmic Exposure Value (EV) using a calibrated photographic model. The computed results are then rendered on the SSD1306 OLED display.

User interaction is facilitated through a rotary encoder interfaced via GPIO. The encoder enables dynamic adjustment of system parameters, including ISO selection, aperture lock, shutter lock, and display mode. These inputs are incorporated into the computation stage, allowing real-time updates to exposure calculations and recommendations.

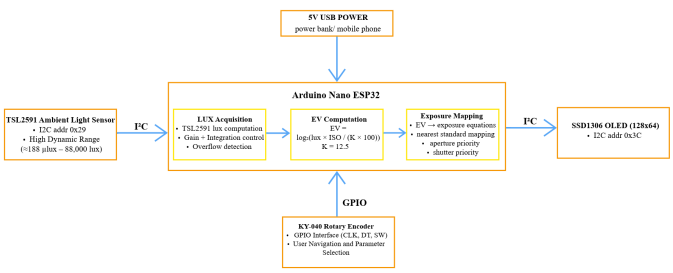

Fig. 1. System architecture of the proposed lux meter.

B. Light Measurement and EV Computation

1) Illuminance and the Lux Unit: Illuminance is defined as the luminous flux incident on a surface per unit area and is expressed in lux (lx). The proposed system utilizes the TSL2591 ambient light sensor, which employs a dual-channel photodiode architecture to capture both visible and infrared light components. The sensor internally processes these channels to provide a calibrated lux output, enabling reliable measurement across a wide dynamic range. [4]

2) Exposure Value and Exposure Computation: Exposure Value (EV) is a logarithmic quantity that represents the combination of aperture and shutter speed required to correctly expose a scene at a reference ISO of 100. It is defined as:

$$EV_{100} = \log_2\left(\frac{N^2}{t}\right) \tag{1}$$

where N is the aperture (f-number) and t is the shutter speed in seconds. Each increment of 1 EV corresponds to a one-stop reduction in light, while each decrement represents a doubling of light intensity. Typical photographic scenes span EV values from approximately -2 (moonless night) to $+17$ (bright sunlight).

For incident-light metering, EV can be directly computed from the measured illuminance E (in lux) as:

$$EV = \log_2\left(\frac{E \cdot ISO}{K \cdot 100}\right) \tag{2}$$

where ISO is the sensor sensitivity and K is the incident-light calibration constant. In this work, K = 1.176, determined empirically through simultaneous comparison against a Sony A7C II camera under controlled indoor lighting conditions, as the factory default of K = 12.5 produced systematic measurement error with this specific TSL2591 unit. [6]

Given a computed EV, the system derives exposure parameters using two priority modes. In aperture-priority mode, the aperture is fixed and the required shutter speed is calculated as:

$$t = \frac{N^2}{2^{EV}} \tag{3}$$

In shutter-priority mode, the shutter speed is fixed and the required aperture is computed as:

$$N = \sqrt{t \cdot 2^{EV}} \tag{4}$$

The resulting continuous values are mapped to the nearest standard photographic settings using predefined lookup tables, ensuring compatibility with conventional camera exposure scales.

C. Hardware Architecture

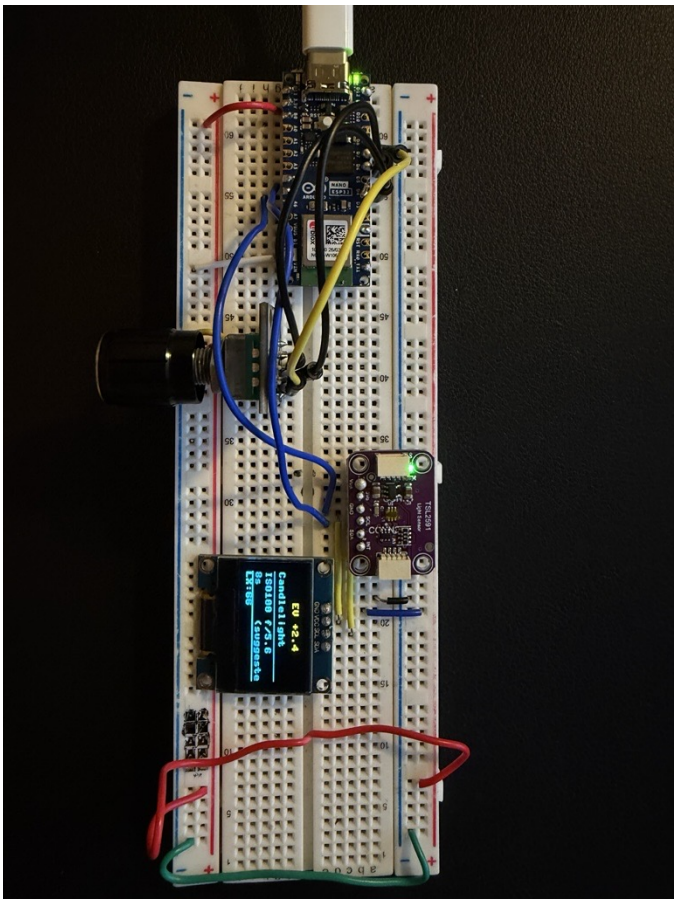

Fig. 2. Breadboard Prototype of the proposed lux meter

The hardware platform is centered on the Arduino Nano ESP32, which integrates the ESP32-S3 microcontroller and provides a compact, low-power embedded processing unit with native MicroPython support. The system is composed of four primary components: the ESP32-S3 microcontroller, the TSL2591 ambient light sensor, the SSD1306 OLED display, and a KY-040 rotary encoder for user input.

The TSL2591 sensor is connected to the ESP32-S3 via a shared I^2C bus. It provides high dynamic range illuminance measurements across a wide range of lighting conditions, enabling accurate sensing from low-light indoor environments to bright outdoor scenes. The SSD1306 OLED display, also connected to the same I^2C bus, is used to render real-time Exposure Value (EV) readings and exposure recommendations [5].

User interaction is facilitated through a KY-040 rotary encoder connected to three dedicated GPIO pins. The encoder provides quadrature input for rotational direction detection and a push-button input for menu navigation, enabling real-time adjustment of system parameters such as ISO, aperture lock, shutter lock, and display mode.

All components are powered from a 5 V USB source connected to the Arduino Nano ESP32. The onboard voltage regulator provides a stable 3.3 V supply to the sensor, display, and encoder module. The TSL2591 and SSD1306 operate entirely within the 3.3 V domain, while the KY-040 encoder leverages its onboard pull-up resistors, eliminating the need for external passive components.

The resulting architecture forms a compact, low-cost embedded system with a shared communication bus, a dedicated user-input interface, and real-time display output, suitable for portable photographic light-metering applications.

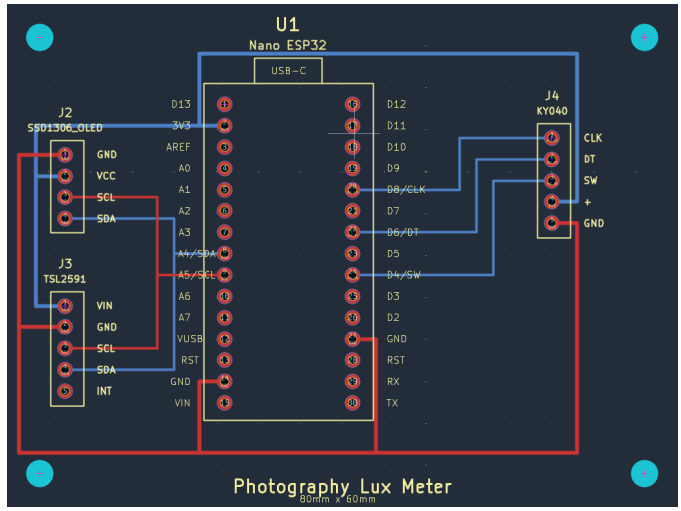

Fig. 3. PCB layout of the proposed digital light meter showing component placement and routing.

D. Communication Architecture

All sensor and display communication is handled over a single I2C bus implemented using the ESP32's software I2C peripheral operating at 100 kHz [7]. The two devices occupy distinct addresses and coexist without conflict:

TABLE I
I^2C DEVICE CONNECTIONS

Device	I^2C Address	GPIO SDA	GPIO SCL
TSL2591	0x29	GPIO 11	GPIO 12
SSD1306 OLED	0x3C	GPIO 11	GPIO 12

Software-defined pull-ups are enabled on both SDA and SCL lines via the ESP32-S3 internal GPIO pull-up resistors. A bus frequency of 100 kHz was selected for reliability given the shared bus topology and the use of software I2C, which is more susceptible to timing jitter than hardware I2C peripherals.

The KY-040 rotary encoder is connected independently of the I2C bus via three dedicated GPIO pins and is driven entirely by hardware interrupts, ensuring encoder events are captured asynchronously without interfering with the sensor read cycle.

TABLE II
ROTARY ENCODER GPIO MAPPING

Encoder Signal	GPIO
CLK	GPIO 17
DT	GPIO 18
SW (button)	GPIO 9

E. Firmware Design

The firmware is implemented in MicroPython and executes on the ESP32 as a single embedded application. The system follows a cyclic execution model in which sensor acquisition, user input handling, computation, and display updates are performed within a timed main loop.

At startup, the firmware initializes the I^2C interface, configures the TSL2591 sensor gain and integration time, and sets up the SSD1306 display and rotary encoder interface. The main loop executes at a fixed interval, with sensor acquisition occurring at a slower rate to allow sufficient integration time for accurate light measurement.

During each acquisition cycle, the sensor provides an illuminance value in lux, which is converted into an Exposure Value (EV) using the calibrated logarithmic relationship. The computed EV is stored in a rolling buffer to support temporal visualization and is used to derive exposure parameters based on the selected operating mode. The firmware additionally estimates Correlated Colour Temperature (CCT) in Kelvin using the ratio of infrared to full-spectrum channel counts, providing supplementary colour temperature information on the display.

User interaction is handled through an interrupt-assisted rotary encoder interface. Rotational input is decoded as incremental changes, while the push-button input is used to navigate between system states. The firmware maintains a finite state machine that cycles through configuration menus for ISO selection, aperture lock, shutter lock, and display mode. Encoder inputs update these parameters in real time without interrupting the measurement pipeline.A long press (¿800 ms) navigates backward through the menu hierarchy, returning to the previous state without requiring a full cycle.

The firmware supports multiple display modes, including a primary EV readout, aperture-priority mode, shutter-priority mode, and a graphical history view. In each mode, computed exposure values are mapped to the nearest standard photographic settings using predefined lookup tables to ensure compatibility with conventional camera controls.

Error handling is incorporated to manage sensor saturation and communication faults. Overflow conditions detected by the sensor are flagged and trigger a warning state on the display, prompting the user to adjust gain or integration time. Normal operation resumes automatically once valid measurements are restored.

Overall, the firmware architecture integrates real-time sensing, user interaction, and exposure computation into a cohesive embedded system, enabling responsive and reliable photographic light metering.

IV. RESULTS AND DISCUSSION

A. System Functionality

The implemented system performs real-time lux acquisition, Exposure Value (EV) computation, and photographic exposure recommendation across all display modes. The device operates autonomously from a 5 V USB power source and produces stable EV readings shortly after initialization. The rotary encoder enables reliable navigation between ISO, aperture lock, shutter lock, and display mode, with all parameter changes reflected immediately in the computation pipeline.

The EV graph mode provides a clear visualization of illumination changes over time. Auto-scaling ensures readability across varying lighting conditions without manual adjustment.

B. Sensor Dynamic Range

The TSL2591 sensor demonstrated effective performance across a wide range of lighting conditions. Low gain settings were sufficient for bright environments such as outdoor daylight, while higher gain settings enabled measurement in dim indoor and low-light conditions. Overflow detection operated correctly, allowing the system to identify and respond to saturation scenarios.

C. Exposure Accuracy

Exposure recommendations were validated through direct comparison against a Sony A7C II camera under indoor lighting at ISO 100. At ISO 100 with f/5.6 the meter produced shutter speed recommendations matching the camera exactly. ISO scaling was verified to produce the correct 1 EV change per stop of ISO across the tested range.

The aperture-priority and shutter-priority modes correctly computed complementary exposure parameters, with rounding to standard photographic values introducing only minor deviations consistent with discrete camera settings.

D. System Reliability

The rotary encoder interface required debounce filtering to eliminate spurious inputs caused by mechanical contact bounce. After implementing time-based filtering, encoder performance was stable and responsive.

No communication errors were observed on the shared I^2C bus during operation. The selected bus frequency of 100 kHz provided reliable performance for both the sensor and display.

E. Limitations

Calibration was performed empirically against a single camera body (Sony A7C II) under indoor conditions. The derived constant K = 1.176 may not generalise across different lighting environments or sensor units without re-calibration. Gain selection is manual and requires user intervention under extreme lighting conditions. The CCT estimation relies on a single calibration point (ratio 0.2082 $\rightarrow$ 2990K) and is approximate. A dedicated colour sensor such as the TCS34725 would provide significantly more accurate colour temperature measurement. Finally, the current prototype lacks a dedicated enclosure and onboard power system.

V. Conclusion

This work presented the design and implementation of an embedded digital lux meter based on the Arduino Nano ESP32 and the TSL2591 high dynamic range sensor. The system provides real-time EV computation, supports multiple metering modes, and delivers exposure recommendations consistent with established photographic standards.

Experimental results demonstrate reliable operation across a wide range of lighting conditions, achieving practical accuracy within one-third stop under standard conditions.

Future work includes calibration against a reference instrument, implementation of automatic gain control, and development of a portable enclosure with integrated power. The system provides a cost-effective and transparent alternative to commercial light meters and smartphone-based solutions.

References

[1] I. M. S. Wibawa, I. K. Putra, and A. A. N. Gunawan, "Design of Digital Lux Meter Based on Arduino Using EL7900 Photodiode Sensor," *Asian Journal of Research and Review in Physics*, vol. 8, no. 4, pp. 37–43, 2024. [Online]. Available: https://doi.org/10.9734/ajr2p/2024/v8i4173

[2] S. S. Kore, N. R. Patil, G. S. Tawde, and S. R. Yadav, "Digital Lux Meter: High-Precision I^2C-Based Light Intensity Measurement System," *International Journal of Intelligent Systems and Applications in Engineering*, vol. 12, no. 4, pp. 5779–5787, 2024. [Online]. Available: https://www.ijisae.org

[3] N. Vujica Herzog, P. Dobaj, B. Buchmeister, and L. Spindler, "Comparison between Lux Meter Apps and Illumination Measuring Devices," in *DAAAM International Scientific Book 2022*, B. Katalinic, Ed. Vienna, Austria: DAAAM International, 2022, ch. 03, pp. 031–046. doi: 10.2507/daaam.scibook.2022.03

[4] ams AG, "TSL2591 Datasheet: High Sensitivity Light-to-Digital Converter," Premstaetten, Austria, DS000338, Rev. 1.0, 2013.

[5] Solomon Systech Ltd., "SSD1306 Datasheet: 128 $\times$ 64 Dot Matrix OLED/PLED Segment/Common Driver with Controller," 2008.

[6] *Photography — General Purpose Photographic Exposure Meters (Photoelectric Type) — Guide to Product Specification*, ISO 2720:1974, 1974.

[7] MicroPython, "MicroPython Documentation v1.27.0," [Online]. Available: https://docs.micropython.org. [Accessed: Apr. 2026].