Author Manuscript
Author Manuscript
Author Manuscript
Author Manuscript

HHS Public Access
Author manuscript
Hear Res. Author manuscript; available in PMC 2024 February 01.

Published in final edited form as:
Hear Res. 2022 December ; 426: 108608. doi:10.1016/j.heares.2022.108608.

An overview of the HASPI and HASQI metrics for predicting speech intelligibility and speech quality for normal hearing, hearing loss, and hearing aids

James M. Kates[a],
Department of Speech Language and Hearing Sciences, University of Colorado, Boulder, CO 80309, USA

Kathryn H. Arehart
Department of Speech Language and Hearing Sciences, University of Colorado, Boulder, CO 80309, USA

Abstract

Alterations of the speech signal, including additive noise and nonlinear distortion, can reduce speech intelligibility and quality. Hearing aids present an especially complicated situation since these devices may implement nonlinear processing designed to compensate for the hearing loss. Hearing-aid processing is often realized as time-varying multichannel gain adjustments, and may also include frequency reassignment. The challenge in designing metrics for hearing aids and hearing-impaired listeners is to accurately model the perceptual trade-offs between speech audibility and the nonlinear distortion introduced by hearing-aid processing. This paper focuses on the Hearing Aid Speech Perception Index (HASPI) and the Hearing Aid Speech Quality Index (HASQI) as representative metrics for predicting intelligibility and quality. These indices start with a model of the auditory periphery that can be adjusted to represent hearing loss. The peripheral model, the speech features computed from the model outputs, and the procedures used to fit the features to subject data are described. Examples are then presented for using the metrics to measure the effects of additive noise, evaluate noise-suppression processing, and to measure the differences among commercial hearing aids. Open questions and considerations in using these and related metrics are then discussed.

Keywords

Speech intelligibility; Speech quality ratings; Auditory peripheral model; Hearing loss; Hearing aids

[a]Author to whom correspondence should be addressed. James.Kates@colorado.edu, Telephone: +1 720-226-1266.

Declaration of Interest
The authors have research grant support from hearing aid manufacturer GN ReSound.

Author Manuscript Author Manuscript Author Manuscript Author Manuscript

1. Introduction

Speech perception metrics are intended to predict the impact of a voice communication system on speech intelligibility, quality, or related perceptual characteristic. Metrics can be targeted at different combinations of speech stimuli, signal modifications, listening situations, perceptual criteria, and listener characteristics such as hearing loss. Further considerations are whether the metric is intended for a specific application or for a wider range of possible signal modifications, and whether the metric compares the modified speech to a clean reference (intrusive) or evaluates the modified signal alone (non-intrusive).

This paper presents the current versions of the Hearing-Aid Speech Perception Index (HASPI version 2) (Kates and Arehart, 2021) and the Hearing-Aid Speech Quality Index (HASQI version 2) (Kates and Arehart, 2014). HASPI and HASQI are intrusive metrics in which the degraded sentence is compared to a clean reference sentence; for a discussion of non-intrusive intelligibility metrics, the reader is referred to Feng and Chen (2022). The HASPI and HASQI metrics are targeted at a wide range of speech degradation mechanisms including additive noise, nonlinear distortion, and hearing-aid processing. HASPI and HASQI share a model of the auditory periphery designed for listeners regardless of hearing ability; in implementing hearing loss the peripheral model parameters adjusted in response to the individual audiogram. HASPI and HASQI are presented as representative intrusive metrics for predicting intelligibility and speech quality, and they are used to explore more general considerations with designing, evaluating, and comparing metrics.

Despite the differences in data and applications, most current perceptual metrics are designed using a similar set of components: 1) a model of the auditory periphery, 2) speech feature extraction from the outputs of the peripheral model, and 3) fitting the feature values to listener perceptual data such as intelligibility scores or quality ratings. A metric is constrained by each of these three blocks and is tied to the data used to train it. For example, the speech intelligibility index (SII) (ANSI, 1997) depends only on the signal-to-noise ratio (SNR) measured across frequency bands, but the band-importance weights applied to the SNR values and the function used to transform the SII into the proportion speech materials correctly identified will differ for different stimuli. Compared to the values used for isolated monosyllables, the frequency weights for sentence materials place a greater emphasis on low frequencies and the transfer function for sentence materials is steeper and gives high intelligibility at a lower computed SII value (French and Steinberg, 1947). And even for similar materials, differences in the talkers (McCloy et al., 2015) or interfering noise segments (Lundberg et al., 2020) can affect the intelligibility scores or rated quality.

An additional concern with the training data is the type of degradation or degradations applied to the stimuli. Linear frequency shaping, for example, will determine how much of the stimulus will be audible above the normal or impaired auditory threshold in the peripheral model. Different types of additive noise, such as long-term average speech shaped (LTASS) noise, multi-talker babble, or traffic noise, will have different long-term spectra and will modify the noisy stimulus envelope in different ways (Lundberg et al., 2020). Other types of degradation have also been studied, including low data-rate communication channels and nonlinear hearing-aid processing. Hearing-aid processing typically uses a

Author Manuscript Author Manuscript Author Manuscript Author Manuscript

filterbank (or short-time fast Fourier transform) to provide multi-channel frequency analysis and then implements nonlinear time-varying gains in each band to provide wide dynamic-range compression (WDRC) and noise suppression, and the processing can also include frequency reassignment where high-frequency information is moved to lower frequencies where audibility is presumed to be better. A concern is that a metric trained on one type of degradation or processing may not be accurate for a different type of signal modification.

Given all of the possibilities available in designing metrics, it is no surprise that many metrics have been developed to predict speech intelligibility (e.g. Kryter, 1962; Houtgast and Steeneken, 1985; Elhilali et al., 2003; Jørgensen, and Dau, 2011; Van Kuyk et al., 2018; Steinmetzger et al., 2019; Kates and Arehart, 2021) and speech quality (e.g. Moore et al., 2004; Chen and Parsa, 2007; Hu and Loizou, 2008; Huber et al., 2014; Kates and Arehart, 2014). Often these metrics are targeted at specific signal degradations, such as intelligibility in additive noise (Ma and Loizou, 2011; Taal et al., 2011) or speech quality for signals coded at low data rates (Huber and Kollmeier, 2006; Beerends et al, 2013). The goals of the HASPI and HASQI metrics are to predict speech intelligibility and quality for a wide range of signal degradations for listeners regardless of hearing status, including those hearing speech processed through a hearing aid.

The remainder of this paper proceeds with a summary of the auditory model used in HASPI and HASQI and how this model incorporates hearing loss as well as normal hearing. The speech features and the procedures used to fit these features to the listener data for intelligibility and speech quality are then summarized. Examples are then presented using the metrics to measure the effects of additive noise, evaluate noise-suppression processing, and to measure the differences among commercial hearing aids. A section on metric design considerations and limitations provides insight into what this laboratory has learned in developing HASPI and HASQI, and extends these considerations to intelligibility and quality metrics in general.

2. Model of the Auditory Periphery

HASPI version 2 and HASQI version 2 use the same model of the auditory periphery. In HASPI, the reference is the clean speech passed through a model of the normal periphery (i.e., 0-dB audiogram). In HASQI, the reference is the clean signal first modified with a linear gain calculated to compensate for the audiogram and then passed through a model of the periphery based on that audiogram. The assumption in choosing the reference signals is that the highest intelligibility will be obtained for the sharp auditory filters and wide dynamic range found in the normal periphery. The assumption for quality is that the highest speech quality for any listener will be obtained for the clean undistorted signal processed through that listener's periphery with linear amplification (Bryne and Dillon, 1986) provided to compensate for loss of audibility. For both metrics, the processed signal being evaluated is passed through a model of the listener's periphery to take any hearing loss into account.

The model reproduces normal hearing and provides hearing impairment that depends on the audiogram, thus modeling hearing ability on a continuum that goes from no loss to severe loss. Descriptions of the model are given in Kates (2013), Kates and Arehart (2014),

Author Manuscript Author Manuscript Author Manuscript Author Manuscript

and Kates and Arehart (2021) and are summarized here. A block diagram of the peripheral model for one signal (reference or degraded) is presented in Fig 1. The model is based on a combination of physiological and perceptual data. The input signal is resampled at 24 kHz to preserve the infinite impulse response (IIR) transfer functions of the middle-ear and auditory filters independent of the original signal sampling rate. The resampling is followed by a broadband temporal alignment of the degraded and reference signals. A second temporal alignment stage later in the model provides alignment within each frequency band; the temporal alignment steps help maximize the degraded and reference signal cross-correlations used in calculating HASPI and HASQI. The middle-ear filter (Kates, 1991) then attenuates the low and high frequencies to approximate equal loudness contours (Suzuki and Takashima, 2004).

Auditory frequency analysis is provided by a filterbank using fourth-order gammatone filters (Cooke, 1991; Patterson et al., 1995). The thirty-two filters span 80 to 8000 Hz. The sharpest filters represent normal hearing (Moore and Glasberg, 1983) and the filter bandwidth increases with increasing hearing loss (Moore et al., 1999). The filter bandwidths also increase with increasing signal intensity for inputs above 50 dB SPL in a frequency band (Baker and Rosen, 2002; Baker and Rosen, 2006). The filter magnitude transfer functions are shown in the left panel of Fig 2 for normal hearing and in the right panel for the maximum hearing loss or maximum signal intensity represented in the model; for a hearing loss of 50 dB SL or greater or an input level of 100 dB SL or higher the maximum high-frequency filter bandwidth is four times that for normal hearing at low input levels. In addition, increased filter bandwidth is tied to increased sensitivity in the tail region to lower-frequency energy.

Dynamic-range compression associated with the outer hair cell (OHC) behavior (Ruggero et al., 1997) is provided in the peripheral model following the auditory frequency analysis. The compression in each auditory filter band is controlled by the output of an associated control filter. The control filter bandwidths in HASPI and HASQI are set to the widest filters (e.g. greatest hearing loss or highest signal intensity) implemented in the model (Zhang et al., 2001). The control signal is the envelope of the control filter output passed through an 800-Hz lowpass filter (Zhang et al., 2001) to provide a small time delay, and the filtered envelope in each frequency band provides the signal used to adjust the gain applied to the auditory filter output signals. An example of the compression gain rule is illustrated in Fig 3. For normal hearing, as shown by the heavy solid line, inputs below 30 dB SPL or above 100 dB SPL receive linear amplification while input levels between 30 and 100 dB SPL are compressed. The compression ratio is frequency-dependent, and ranges from 1.25:1 at the lowest band center frequency of 80 Hz up to 3.5:1 at the highest frequency of 8000 Hz (Cooper and Rhode, 1997; Hicks and Bacon, 1999; Plack and Oxenham, 2000). Hearing loss associated with OHC damage increases the auditory threshold and reduces the compression ratio, as shown by the lighter solid line. This reduction in compression is consistent with the loudness recruitment associated with hearing loss (Kiessling, 1993). The maximum OHC damage shown in the figure causes a threshold shift that corresponds to linear amplification.

After compression, the auditory signal amplitude is converted to dB re: pure-tone threshold, with amplitudes below threshold set to 0 dB SL. In addition to the threshold shift associated

Author Manuscript Author Manuscript Author Manuscript Author Manuscript

with OHC damage, an additional shift is applied based on the assumed amount of inner hair-cell (IHC) damage; the model assumes 80 percent of the hearing loss indicated by the audiogram is due to OHC damage and the remaining 20 percent is due to IHC damage (Moore et al., 1999). Adaptation of the IHC firing rates having a rapid time constant of 2 ms and a short-time time constant of 60 ms (Harris and Dallos, 1979) is then applied to the compressed dB signal. The firing-rate adaptation emphasizes the transients in speech sounds while reducing the neural response to steady-state sounds that contribute less to speech intelligibility (Yoo et al., 2007). The last stage of the peripheral model is the removal of the relative delays between the gammatone filters to provide the across-frequency timing compensation that occurs higher up the auditory pathway (Wojtczak et al., 2012). The model outputs are 1) the envelope in each frequency band in dB SL, and 2) the envelope remodulated up to the carrier frequency in each band to provide a basilar membrane (BM) signal that includes the temporal fine structure (TFS).

3. Speech Features and Fitting to Listener Data

Although HASPI and HASQI use the same model of the auditory periphery, they differ in the speech features extracted from the model and in the procedures used to combine the features to predict intelligibility and quality, respectively. HASPI uses an envelope modulation-rate filterbank with rate center frequencies up to 256 Hz as the input to an ensemble of neural networks, while HASQI uses an envelope modulation-rate lowpass filter with a cutoff frequency of approximately 40 Hz combined with temporal fine structure correlations and differences in the long-term spectrum as the inputs to a parametric model. Both metrics are fit to English-language sentence materials. Changes to the stimuli can cause changes in the metrics. For example, in the SII, continuous discourse produces steeper psychometric functions and greater low-frequency band importance than found for monosyllabic materials (Studebaker et al., 1987), and a modulation-based intelligibility metric derived for Mandarin Chinese requires higher modulation rates than for continuous English discourse (Chen and Loizou, 2011).

3.1 HASPI version 2 Intelligibility Metric

The reference signal for HASPI is the clean speech passed through a peripheral model for a 0-dB audiogram, while the processed/degraded signal is passed through a peripheral model of the listener audiogram. The signal analysis starts with the dB SL envelope outputs from the peripheral model in each of the thirty-two auditory frequency bands from 80 to 8000 Hz. The dB envelopes are lowpass filtered at 320 Hz using a sliding von Hann window and subsampled at 2560 Hz. A block diagram of the HASPI calculation procedure is shown in Fig 4.

The dB envelopes across frequency at each subsample provide a compressed log spectrum on an auditory frequency scale. The short-time spectrum is fit by a set of five basis functions ranging from ½ cycle of a cosine spanning the spectrum to 2½ cycles spanning the spectrum. These basis functions provide samples of the discrete cosine transform (DCT), and fitting them to the log auditory spectrum gives short-time mel-frequency cepstral coefficients (Mitra et al., 2012).

Author Manuscript Author Manuscript Author Manuscript Author Manuscript

Each of the five cepstral coefficient sequences is passed through a temporal modulation filterbank. The filterbank has 10 temporal modulation-rate filter bands with center frequencies ranging from 2 to 256 Hz. The modulation-rate filters have $Q = 1.5$, which is consistent with filters that have proven effective in modeling amplitude modulation discrimination data (Dau et al., 1997; Ewert et al., 2000; Ewert et al., 2002). The five cepstral coefficient sequences are passed through the ten temporal modulation rate filters; for all fifty, the filtered coefficient sequence for the degraded output is cross-correlated with the corresponding reference sequence. The cross-correlation values are averaged over the five basis functions (Kates and Arehart, 2015) to produce a set of ten averaged cepstral temporal modulation-rate correlations.

The modulation-rate correlations have been fit to listener intelligibility data for a variety of processing conditions including additive noise, noise suppression, reverberation, nonlinear distortion, and hearing-aid processing including wide dynamic-range compression and frequency shifting (Kates and Arehart, 2021). The listener data were IEEE (Rothauser, 1969) or HINT (Nilsson et al., 1994) sentences, scored as proportion complete sentences correct using a scale from 0 to 1. The goal in fitting a wide range of data is to produce a generalized metric that will be accurate beyond the training data and which can be applied to novel forms of distortion and new types of nonlinear hearing-aid processing. The fitting procedure comprises bootstrap aggregation ("bagging") of ten neural networks (Breiman, 1996). The bootstrap random sampling with replacement approximates the distribution of the metric values, with the predicted intelligibility score given by the average of ten networks. The bagging procedure reduces the estimator variance and provides improved immunity to overfitting the data (Kittler, 1998; Domingos, 2000). Each of the ten neural networks has an input layer with ten inputs, one hidden layer with four neurons, and an output layer with one neuron. The inputs were the ten averaged cepstral modulation-rate correlations. The sigmoid activation function was used for all layers. The sigmoid function applied to the output layer ensures that the output is bounded between 0 and 1, which matches the range of the sentence-correct intelligibility scores. Backpropagation with a mean-squared error loss function (Rumelhart et al., 1986) was used to train the neural networks.

The neural network weights can be difficult to interpret. To help understand the relative importance of the different modulation rates, a regression curve was used to fit the envelope modulation rates to the intelligibility scores. The regression weights indicate that modulation rates of 10 Hz and below and 64 Hz and above are the most important for intelligibility, with reduced importance for the rates between 16 and 40 Hz. This rate dependency agrees with the results of Steinmetzger et al. (2019), who found that modulation filters tuned to intermediate modulation rates made the smallest contribution to their intelligibility model.

3.2 HASQI version 2 Quality Metric

The reference signal for HASQI is the clean speech passed through a model of the listener's periphery. The processed/degraded signal is also passed through the peripheral model associated with the degree of hearing loss. Both the envelope and basilar membrane vibration outputs from the peripheral models are used. The metric measures nonlinear and linear changes in the speech signal, and then forms the product of these two terms to

Author Manuscript Author Manuscript Author Manuscript Author Manuscript

produce the final quality estimate. A block diagram of the HASQI calculation procedure is shown in Fig 5.

The nonlinear term has an envelope component and a TFS component. The envelope component starts with the compressed dB envelope outputs of the peripheral model. The envelope in each frequency band is smoothed using a 16-ms von Hann window having a 50-percent overlap, giving a lowpass-filtered envelope subsampled at 125 Hz. Each short-time log spectrum is fit with the same five basis functions as used for HASPI. The sequence of cepstral coefficients for each basis function for the degraded signal is cross-correlated with the sequence for the reference signal, and the five values are then averaged to produce a single cepstral correlation value.

The TFS component starts with the BM vibration outputs from the peripheral model in each frequency band. The BM signal is divided into 16-ms segments using a von Hann window with a 50-percent overlap. The normalized cross-covariance of each segment in each frequency band is computed between the degraded BM vibration signal and the reference BM vibration signal after adjusting the relative delay to maximize the calculated value. Frequency-dependent weights derived from a fifth-order low-pass filter having a cutoff frequency of 3.5 kHz (Johnson, 1980; Heinz et al., 2001) are applied to the cross-covariance values to model the loss of IHC synchronization at high frequencies, after which the weighted average is computed across the frequencies and segments. The final nonlinear term is then given by the product of the square of the cepstral correlation with the BM vibration.

The linear term also has two components. The first component measures the RMS difference across frequency in the long-term spectral shape of the log auditory spectrum between the degraded signal and the reference signals. The second component measures the RMS difference in the spectral slopes, with the slopes computed as the difference between adjacent auditory spectral bands in dB. The linear term is given by a weighted sum of the spectrum and spectral slope RMS differences subtracted from 1 since a value of 1 indicates perfect signal fidelity.

The final HASQI value is the product of the nonlinear and linear terms. This parametric quality model was empirically derived to fit a large dataset comprising speech corrupted by stationary additive noise and multitalker babble, nonlinear distortion including peak clipping and quantization noise, dynamic-range compression, spectral tilt, and spectral peaks (Arehart et al., 2010). A value of 1 indicates the highest quality and a value of 0 indicates the lowest rated quality reported in the Arehart et al. (2010) data. In fitting the subject responses, the ratings for each subject were normalized so that the highest rating for that subject was set to 1 and the lowest rating was set to 0, thus removing the potential effect of different subjects favoring different portions of the rating scale. The model was then validated on additional datasets including modulated noise, noise suppression, noise vocoder, frequency shifting, and hearing-aid acoustic feedback and feedback suppression (Kates and Arehart, 2014).

Author Manuscript Author Manuscript Author Manuscript Author Manuscript

3.3 Compare Metrics

HASPI and HASQI return different calculated values for similar degradations; quality is much more sensitive to small signal changes than intelligibility, while intelligibility gives a much steeper equivalent psychometric function over the range where the speech goes from being unintelligible to having sufficient information present to ensure nearly-perfect intelligibility (Arehart et al., 2022). This behavior is illustrated in Fig 6 for HASPI and HASQI computed for a group of twenty sentences in long-term average speech shaped (LTASS) noise. The HASPI values are plotted in the left panel and the HASQI values in the right panel for normal hearing (NH), a moderately sloping hearing loss (N3) (Bisgaard et al., 2010) with NAL-R linear amplification (Byrne and Dillon, 1986) to compensate for the loss (N3 NAL-R), and the same loss without amplification (N3 No Gain).

HASPI for NH goes from 0 to 1 over a range of SNRs from −5 to +10 dB for a noisy speech signal held at a constant level of 65 dB SPL, and predicted intelligibility saturates at 1 at SNRs greater than 10 dB. The N3 loss without amplification shows the predicted intelligibility saturating for SNRs at 15 dB or higher due to the loss of audibility of the speech compared to the normal-hearing reference ear, while at lower SNRs the HASPI values are reduced due to the additive noise. Providing linear amplification for the N3 loss restores the predicted intelligibility to nearly the same as for normal hearing, a result that is consistent with the HI listener intelligibility scores for speech in noise (Kates and Arehart, 2005) used in training the metric. The high intelligibility also implies that the broader auditory filters associated with the hearing loss have minimal impact on the HASPI calculations for this audiogram.

HASQI for NH, on the other hand, increases gradually as the SNR increases −5 to +40 dB, and even at 40 dB indicates some loss in predicted quality. The N3 loss without amplification shows HASQI saturating at and above SNRs of 15 dB due to loss of audibility in comparison to the amplified reference speech, while at lower SNRs the noise once again dominates the calculation. The N3 loss with linear amplification is the same as the amplified HASQI reference signal for the N3 calculation, so the HASQI values are high; the amplified N3 is higher than the NH curve since some of the additive noise falls below the impaired N3 auditory threshold. The use of the impaired periphery as the HASQI reference model for the N3 loss minimizes the potential impact of the broadened auditory filters on the predicted quality values for this noisy speech example.

4. Applications

Intelligibility and quality metrics have many applications. In this section we will briefly explore three ways in which the metrics have been used: interpreting listening test results, predicting signal processing algorithm effectiveness, and measuring the differences between hearing aids. These examples all come from research in our laboratory.

4.1 Quality Ratings for Noisy Speech

In the study of Lundberg et al. (2020), speech quality ratings were obtained from hearing-impaired listeners for speech in five everyday types of noise at four different SNRs. The

Author Manuscript Author Manuscript Author Manuscript Author Manuscript

speech comprised a pair of sentences from the Hearing in Noise test (HINT) (Nilsson et al., 1994), and the ratings were provided by ten older adults with mild to moderately-severe sensorineural hearing loss listening through simulated hearing-aid processing. The noise types comprised six-talker babble, a three-talker conversation, kitchen noise, a fast-food restaurant, and street traffic, and the four SNRs were 3, 8, 12, and 20 dB.

The results showed that different types of noise yielded different quality ratings even though presented at the same SNRs. The three-talker conversation and kitchen noise were rated significantly higher in quality than restaurant, traffic, and multi-talker babble noises at the same SNRs, and these latter three noises were not significantly different from each other. An acoustic analysis showed that the quality ratings were related to the noise kurtosis; noises with a high kurtosis, indicating occasional high-intensity peaks in a generally low-intensity background level, had higher ratings than noises with more constant envelope levels over time.

The influence of the noise envelope on the listener quality ratings is illustrated by the scatterplots in Fig 7; the listener ratings are presented on a scale from 0 to 1, with 0 being the lowest quality and 1 being the highest. The correlations computed for the data in each scatterplot are presented in Table 1; these comprise the Pearson linear correlation coefficient, the Spearman rank-order correlation, and Kendall's tau pairwise ranking coefficient.

The ratings plotted as a function of SNR are presented in the upper lefthand panel of Fig 7, the ratings as a function of HASQI are in the upper righthand panel, and the ratings as a function of just the cepstral correlation component of HASQI are in the lower lefthand panel. The correlations between ratings and SNR are lower than the correlations between ratings and HASQI or cepstral correlation, which indicates that SNR only partially captures the relevant noise characteristics. The correlations for ratings and cepstral correlation are very close to those for ratings and HASQI, which suggests that the envelope modulation encapsulated in the cepstral correlation term of HASQI is the most important signal characteristic. This conclusion is further supported by the high correlations between the cepstral correlation and HASQI values that are plotted in the lower righthand panel of Fig 7. And if the curvature in the cepstral correlation data is removed using a second-order curve fit, the Pearson correlation coefficient improves to 0.9974.

It is also worth noting that the range of the HASQI values differs from the range of the cepstral correlation values. HASQI has a maximum of about 0.5 for these data, while the cepstral correlation extends up to about 0.8. The cepstral correlation is a physical measurement of the signal properties and is therefore independent of the subject quality ratings in a given experiment. However, the quality anchors used in the Arehart et al. (2010) experiment are built in to HASQI since the metric is scaled to fit those perceptual data.

4.2 Evaluation of Noise-Suppression Algorithms

In the simulation study of Kates (2017), several algorithms for single-microphone noise suppression were compared for audiograms corresponding to normal hearing and a moderately sloping hearing loss. These noise-reduction algorithms were selected as being representative of what can be implemented in a hearing aid given the limited battery

Author Manuscript Author Manuscript Author Manuscript Author Manuscript

size, computer processing power, and digital memory available. The speech stimuli were sentences embedded in six-talker babble at SNRs that ranged from −20 to +40 dB. The study evaluated six different multiband noise-suppression algorithms, of which three are reported here: Wiener filter (McAulay and Malpass, 1980), power spectral subtraction (Lim and Oppenheim, 1979), and magnitude spectral subtraction (Boll, 1979). Noise suppression turned off, and exact restoration of the noisy speech envelope to match that of the clean speech, provided reference conditions. The impact of the noise power estimation procedure was also included, with the noise calculated exactly for each segment within each frequency band or replaced by the noise RMS average over the entire sentence for the frequency band.

An example of the study results is presented in Figs 8 for exact envelope restoration and in Fig 9 for replacing the exact values with the RMS average over the sentence; an N3 loss is presented in these figures. The Wiener filter in Fig 8 gives intelligibility and quality predictions close to those obtained with envelope restoration, while the results plotted in Fig 9 show that using the RMS average noise power gives results virtually identical to those obtained for no noise-suppression processing.

The overall study results indicate that exact envelope restoration provides an upper bound to the benefit to be expected from the noise suppression processing. The Wiener filter and magnitude spectral subtraction provide performance close to this upper bound given exact knowledge of the noise power in each segment. However, when the exact noise power is replaced by the RMS average over the sentence, the noise-suppression algorithm performance is reduced to that corresponding to no processing. The algorithms that gave the highest predicted intelligibility also gave the highest predicted speech quality since both metrics increase as the match between the processed waveform and the reference improves, and the algorithms that worked best for normal hearing also worked best for the moderately sloping simulated hearing loss.

The noise-suppression algorithms investigated here have two components: the rule used to determine the segment-by-segment gain based on the estimated signal and noise powers in each segment (e.g. Wiener filter), and the procedure used to estimate what the noise power is in each segment (exact segment power versus the average over all of the segments). These results show that useful insights, such as the relative importance of the noise estimation procedure as opposed to the noise-suppression gain rule, can be obtained from simulation studies using metrics to replace human observers.

4.3 Measurements of Commercial Hearing Aids

In the final example considered in this paper, the HASPI and HASQI metrics were used to compare the processing implemented in commercial hearing aids (Kates et al., 2018). Hearing-aid performance is most often described using a small number of standardized measurements (ANSI 2012; 2013; 2014) that examine basic aspects of the processing and help determine if the hearing aid is operating correctly. But modern hearing aids involve several algorithms running simultaneously, and measurement procedures are needed to evaluate the entire hearing aid processing system in the context of the target hearing loss. The objective of this study was to demonstrate the feasibility of using the HASPI and

Author Manuscript Author Manuscript Author Manuscript Author Manuscript

HASQI metrics to discriminate differences in hearing-aid performance for speech in quiet and in noise for different hearing aids and different hearing-aid settings.

Basic and advanced hearing aids were chosen from three manufacturers. The test stimulus was the pair of HINT sentences presented in quiet and in six-talker babble at SNRs of 0 and 10 dB. The signal level was set to 55, 65, or 75 dB SPL. The hearing-aid processing was programmed for a moderate flat loss (N4 audiogram) or for a mild sloping loss (S2 audiogram), and was set to linear amplification, mild processing using wide dynamic-range compression (WDRC), moderate processing that added noise suppression and frequency compression using the manufacturer's recommended settings, or to a maximum processing where the noise suppression and frequency compression were programmed to the maximum amounts available for the audiogram.

The analysis produced statistically significant differences between manufacturer and processing settings as well as for speech presentation level and SNR, but no significant differences between basic and advanced models. Examples of the results are presented in Fig 10 for the effects of presentation level and SNR. As expected, HASPI increases with increasing SNR and with increasing presentation level as more of the speech falls above the impaired auditory threshold. HASQI shows decreasing quality predictions with increasing signal intensity, which may be the result of more of the noise falling above the impaired threshold with increasing signal level or with more-intense signals producing an increased amount of nonlinear WDRC distortion as more of the signal falls above the lower compression kneepoint.

The HASPI and HASQI predictions in Fig 10 are consistent with the listener intelligibility scores and quality ratings reported in Arehart et al. (2022) and reproduced in Fig 11. In that study, HI listeners were presented with sentences in multitalker babble at SNRs of 3, 8, and 20 dB and at overall intensities of 65 and 75 dB SPL; the noisy sentences were processed through a simulated hearing aid providing a range of processing and vent settings. The listener results showed statistically significant effects for presentation level, SNR, and hearing-aid processing for both intelligibility and quality. For the HASPI values plotted in Fig 10, the presentation level has minimal effect for speech in noise. Similarly, for the listener results in Fig 11, there was no statistically significant interaction between level and SNR for the intelligibility scores. Returning to Fig 10, the HASQI quality predictions show a reduction in quality as the level of presentation increases. Similar behavior is apparent for the listener quality ratings plotted in Fig 11, where there is a statistically significant interaction between level and SNR for the quality data. It is apparent that the quality ratings in the 75-dB SPL panel are lower than those in the 65-dB SPL panel. The agreement between the metric predictions and listener results thus extends beyond the training data used for HASPI and HASQI and reinforces the usefulness of the metrics for real-world applications.

Author Manuscript Author Manuscript Author Manuscript Author Manuscript

5. Considerations and Limitations

This section presents some concerns in developing and using intelligibility and quality metrics. HASPI and HASQI are used as examples, but the questions raised and issues addressed apply to any metric.

5.1 Intrusive and Non-Intrusive Metrics

In an intrusive metric, any difference between the degraded and reference signals is considered to be detrimental to intelligibility or quality. However, there are classes of signal processing, such as analysis/synthesis systems, where the processed signal may be perfectly intelligible but have envelope and pitch characteristics that do not match those of the original signal and for which an intrusive metric will therefore fail. Alternatively, a non-intrusive metric should work with any signal degradation since it implicitly includes a model of the auditory decision mechanism. The complexity of feature-based non-intrusive metrics can be comparable to feature-based intrusive metrics, but data-driven approaches such as deep neural networks are computationally intensive and require large training datasets (Spille et al., 2018; Haro et al., 2020; Feng and Chen, 2022).

5.2 Peripheral Model

The peripheral models used for speech intelligibility and quality metrics are generally parallel filterbank systems. The models range from the simplicity of octave-band or one-third octave band filterbanks (Kryter, 1962; ANSI, 1997) to the complexity of auditory filterbanks having time-varying gains and bandwidths (Wirtzfeld et al., 2017; Yamamoto et al., 2020). The model used in HASPI and HASQI is intermediate in this range of complexity. The range of models leads to several questions: Why do simple models produce accurate results for some stimuli when the behavior of the periphery is much more complicated? Is there any advantage obtained with increasing model complexity? Is there an optimal level of complexity that combines accurate predictions for normal and impaired hearing with computational efficiency? And given the range of valid models, accurate predictions may not be proof that the associated peripheral model is the best representation of auditory behavior. That is, arguing backwards from prediction accuracy to implied model accuracy may not be valid.

The motivation in creating the peripheral model used in HASPI and HASQI was to produce a model with modest computational requirements that could reproduce normal and impaired hearing behavior. It was important for our research that the model encompass both the normal periphery and salient aspects of hearing loss; to this end components based on physiology were mixed with components derived from perceptual experiments. Other metrics, such as the SII (ANSI, 1997), partially model hearing loss; the SII models hearing loss as a shift in auditory threshold but does not account for the change in auditory filter bandwidth. As a result, “desensitization factors” have been glued onto the SII to bring the predictions closer in line with perceptual data (Pavlovic et al., 1986; Ching et al., 1998). The goal in HASPI and HASQI was to produce a generalized peripheral model that would work for both normal and impaired hearing and for all signal degradations considered in the perceptual data.

Author Manuscript Author Manuscript Author Manuscript Author Manuscript

5.3 OHC and IHC Damage

A second issue concerning the peripheral model used in a metric is how hearing damage should be modeled and the accuracy with which this loss needs to be represented. For example, the peripheral model used in HASPI and HASQI includes a representation of hearing loss in which the auditory threshold is elevated and the filter bandwidth increased with increasing OHC damage. However, the neural output produced by the IHC also stimulates the medial olivocochlear complex (MOC), which produces an efferent signal that attenuates the cochlear amplification (Clark et al., 2012; Fuchs and Lauer, 2019). Efferent suppression is associated with improved speech intelligibility in noise (Ferry and Meddis, 2007; Clark et al., 2012), and there is a reduction in the amount of suppression with increasing hearing loss (Fuchs and Lauer, 2019). The peripheral model used for HASPI and HASQI does not include efferent suppression, in part because the proposed time constant (Clark et al., 2012) is similar to the duration of the stimuli used to measure intelligibility and speech quality and the system would therefore not have sufficient time to adapt.

IHC damage provides an additional threshold shift, but there is no direct representation of auditory deafferentation (Lopez-Poveda and Barrios, 2013) or the IHC synaptopathy related to hidden hearing loss (Liberman, 2017) in the HASPI/HASQI peripheral model. There is, however, a low-level random dither added to the extracted signal envelopes, but the magnitude of the dither has not been calibrated against perceptual data. Incorporating an IHC synapse model (Bruce et al., 2018) can provide a mechanism for modifying the rate-vs-intensity function and shifting the firing-rate threshold with increasing hearing loss. A reduction in the IHC neural response will produce a stochastically undersampled representation of the speech waveform, which has been shown to correspond to reduced speech intelligibility for noisy stimuli (Lopez-Poveda and Barrios, 2013). However, a concern with representing synapse loss as an increased random dither or by a probabilistic synapse model is that calculations of the metrics for identical audiograms will generate a probability distribution rather than a constant value, and the requisite averaging to reduce the variance can substantially increase the computational burden.

5.4 Fitting Subject Responses

The procedure used to fit the speech features to the listener data can affect the metric accuracy and the ability of the metric to generalize to new data. HASQI, for example, uses a parametric data-fitting procedure in which a functional form is assumed to represent the mapping of features to quality ratings, and the fitting involves determining the set of optimal parameters. The parametric model represents *a-priori* knowledge of the function behavior. In HASQI, for example, this knowledge is embedded in the function asymptotes which force the quality values to lie on the interval [0, 1]; the lower limit for speech in noise thus applies to SNRs much worse than those used for the listener quality ratings. The advantage of this approach is that the fitting involves only a few parameters that can be determined with a small amount of data, and which allows extrapolation to new data given the assumption that the functional form is a general representation of human perception.

An alternative is to use a data-driven fitting procedure such as a neural network. Neural networks make no assumptions about the functional form of the metric, can approximate

Author Manuscript Author Manuscript Author Manuscript Author Manuscript

arbitrary nonlinear mappings of the speech features to the subject data (Beale et al., 2019), and can model interactions between the features used as the inputs to the network (Tu, 1996). However, neural networks only fit the data used to train them and generalization to new data cannot be guaranteed. Furthermore, training requires large amounts of data to avoid overfitting (Beale et al., 2019), a problem where the network learns the details of a specific dataset instead of converging to a general perceptual model. The assumption in using a neural network in HASPI is that the range of signal degradations used in training the metric, when combined with bootstrap aggregation (Breiman, 1996), is sufficient to avoid the dangers of overfitting (Kittler, 1998; Domingos, 2000).

5.5 Comparing Metrics

As discussed above, metric accuracy can only be presumed for the data used to train them. In many papers introducing new or improved metrics, the authors' metric is evaluated for a specific dataset and then compared to existing metrics that have been trained on different data. Such comparisons can be misleading since the new metric has been optimized for the test dataset and the comparison metrics may have not been. The comparisons are therefore not a test of metric accuracy but rather a test of metric generalizability beyond the original training data. Similarly, using a metric trained on NH data to model HI results can also be misleading.

A related concern is the anchors used for quality judgments. In the Introduction, it was mentioned that the SII band importance function and the SII-to-proportion correct transfer function depend on the test stimuli. Listener quality ratings for a given experiment depend on the range of conditions being evaluated and the extremes presented as the perceptual anchors. Similar stimuli embedded in different experiments can therefore yield different quality ratings (Yeung and Soman, 2005). However, one would still expect to preserve the relative rankings of the metric predictions. Thus Pearson or Spearman correlations may be more relevant for comparing different quality metrics than RMS error if rankings or relative predictions are desired.

A further concern is comparing quality to intelligibility predictions for the same stimuli. HASPI is based on comparing the envelope modulation between the degraded and reference signals, while HASQI also includes changes in the TFS and long-term spectral shape. Thus a noise vocoder will have only a small impact on the predicted intelligibility because the envelope is mostly preserved, but will have a larger impact on quality due to the additional distortion introduced by the TFS (Anderson, 2010). HASQI will also be reduced by changes in the signal long-term spectrum, while HASPI will be minimally affected as long as the modified signal spectrum remains above auditory threshold.

5.6 Tonal Languages

Tonal languages differ from non-tonal languages (e.g. English) in that the pitch contour conveys lexical information. Mandarin Chinese, for example, uses four tones: flat, rising, falling then rising, and falling (Chen et al., 2014). Chen and Loizou (2011) found that for the coherence speech intelligibility index (CSII) (Kates and Arehart, 2005), the mid-intensity speech segments that contain consonant and formant-transition information provided the

Author Manuscript Author Manuscript Author Manuscript Author Manuscript

greatest accuracy in predicting intelligibility in English, but that the high-intensity speech segments which contain the vowel and pitch information were most useful for Mandarin. They also found that for the envelope-modulation based normalized covariance method (NCM) intelligibility metric (Goldsworthy and Greenberg, 2004), a 100-Hz modulation rate lowpass filter cutoff frequency gave the highest accuracy for Mandarin as opposed to the 16-Hz cutoff frequency recommended for the speech transmission index (STI) (Houtgast and Steeneken, 1985). In a pilot study using the same Mandarin sentence stimuli as used by Chen and Loizou (2011) and a model of normal hearing, we found that HASPI v2 gave a Pearson correlation coefficient of 0.77 for the Mandarin sentences in two-talker babble, which is far lower than the value of 0.93 computed for English-language speech in noise or corrupted by nonlinear distortion (Kates and Arehart, 2021). Thus the speech features and the fit of the features to the listener data for a tonal language will differ from those most relevant for a non-tonal language, and metrics derived for non-tonal languages should not be applied to tonal languages.

5.7 Individual Variability

The accuracy of the metrics discussed in this paper is generally determined using averaged results; the metric predictions for the different signal conditions are compared to the subject scores after being averaged over repetitions and subjects for each condition. The averaging reduces the effects of individual variability, including individual differences in physiology such as the division of hearing loss between OHC and IHC damage and synaptopathy (Liberman, 2017). It also reduces the individual differences in speech perception at the cortical level, such as those associated with working memory (Arehart et al., 2013). Using a neural network approach to fitting individual auditory measurements to intelligibility and quality data, Kates et al. (2013) found that starting with the audiogram and frequency-compression parameters, and then adding in steps individual measurements of spectral ripple resolution (Won et al., 2007), age, QuickSIN scores (Killion et al., 2004), and reading span test results (Daneman and Carpenter, 1980) for working memory improved the model accuracy for listeners with mild-to-moderate sloping loss but not for listeners with near-normal thresholds. The correlation between the listener intelligibility scores and the predicted intelligibility as the individual information was added remained relatively constant for the low-loss group, but improved from 0.89 to 0.93 for the highloss group. This improvement in model accuracy suggests that incorporating individual measurements of auditory function into the metrics could improve prediction accuracy, but that the expected improvements may be small.

5.8 Clinical Translation

One objective in the creation of the HASPI and HASQI metrics is clinical translation. A successful hearing-aid fitting needs to find the balance between intelligibility, sound quality, and listening comfort. Metrics can assist in this process by providing estimates of the intelligibility and sound quality based on the audiogram, and may thus improve the effectiveness of the initial settings. In addition, metrics such as HASPI and HASQI consider the trade-off between audibility and nonlinear distortion, which is not directly considered by conventional fitting procedures (Valenti et al., 2006). A challenge in clinical translation is individual variability, as discussed earlier in this section. Further concerns

Author Manuscript Author Manuscript Author Manuscript Author Manuscript

include developing metrics that are immune to the background noise present in realistic clinical examination room or medical office ambient noise conditions, and validating the metric predictions for actual hearing-aid fittings.

6. Conclusions

This paper has presented an overview of the HASPI intelligibility and HASQI speech quality metrics. These metrics share a “front-end” model of the auditory periphery that reproduces the salient aspects of normal and impaired hearing, and the metrics have been designed to give accurate predictions over a wide range of signal modifications, including hearing-aid processing. HASPI is based on measuring changes in the speech time-frequency envelope modulation, while HASQI adds differences in the signal TFS within auditory frequency bands and changes in the speech long-term spectrum and spectral slope. These intrusive metrics compare the processed/degraded signal to a clean reference, and measure the combined impact of all the signal changes introduced by the processing.

The existing implementations of HASPI and HASQI have some practical limitations. Both metrics were derived for sentence materials presented monaurally over headphones, and may not be as accurate for different speech stimuli or for binaural listening. The metrics were derived for English-language stimuli; different speech features and different fitting functions to listener data would be needed for tonal languages. Furthermore, the metric performance is generally presented for results averaged over subjects and stimulus repetitions, and there are sources of individual variability that are not addressed in the present form of the metrics. The MATLAB computer code for the HASPI and HASQI metrics presented in this paper are available upon request from author JMK at James.Kates@colorado.edu

Acknowledgments

The authors were supported by a research grant to the University of Colorado from GN ReSound and by the National Institutes of Health under Grant R01 DC012289.

References

ANSI 1997. Methods for the calculation of the Speech Intelligibility Index. Am Nat Std Inst S3.5–1997, Approved 6 June 1997.

ANSI 2012. Testing hearing aids—Part 2: Methods for characterizing signal processing in hearing aids with a speech-like signal. Am Nat Std Inst S3.42–2012/Pt. 2, Approved 12 September 2012.

ANSI 2013. Methods of measurement of real-ear performance characteristics of hearing aids. Am Nat Std Inst S3.46–2013, Corrected and Republished, September 2014.

ANSI 2014. Specification of hearing aid characteristics. Am Nat Std Inst S3.22–2014, Approved 10 November 2014.

Anderson MC 2010. The role of temporal fine structure in sound quality perception. Speech, Language, and Hearing Sciences Graduate Theses & Dissertations 3. Downloaded from https://scholar.colorado.edu/concern/graduate_thesis_or_dissertations/j9602061v. (Last viewed 17 August 2022).

Arehart KH, Kates JM, & Anderson MC, 2010. Effects of noise, nonlinear processing, and linear filtering on perceived speech quality. Ear and Hearing, 420–436. DOI: 10.1097/AUD.0b013e3181d3d4f3 [PubMed: 20440116]

Arehart KH, Lundberg E, Chon S-H, Harvey LO, Kates JM, Anderson MC, Rallapalli VH, and Souza PE, 2022. A comparison of speech intelligibility and subjective quality with hearing-aid processing

Author Manuscript Author Manuscript Author Manuscript Author Manuscript

in older adults with hearing loss. Int. J. Audiol. 61, 46–58. DOI: 10.1080/14992027.2021.1900609 [PubMed: 33913795]

Arehart KH, Souza P, Baca R, and Kates JM, 2013. Working memory, age, and hearing loss: Susceptibility to hearing aid distortion. Ear Hear. 34, 251–260. DOI: 10.1097/AUD.0b013e318271aa5e [PubMed: 23291963]

Baker RJ, and Rosen S, 2002. Auditory filter nonlinearity in mild/moderate hearing impairment. J. Acoust. Soc. Am. 111, 1330–1339. DOI: 10.1121/1.1448516 [PubMed: 11931310]

Baker RJ, and Rosen S, 2006. Auditory filter nonlinearity across frequency using simultaneous notch-noise masking. J. Acoust. Soc. Am. 119, 454–462. DOI: 10.1121/1.2139100 [PubMed: 16454300]

Beale MH, Hagan MT, and Demuth HB, 2019. Deep Learning Toolbox: User's Guide, R2021b. Downloaded from https://www.mathworks.com/help/pdf_doc/deeplearning/nnet_ug.pdf (Last viewed 16 November 2021).

Beerends JG, Schmidmer C, Berger J, Obermann M, Ullmann R, Pomy J, and Kehyl M, 2013. Perceptual Objective Listening Quality Assessment (POLQA), The third generation ITU-T standard for end-to-end speech quality measurement Part II–Perceptual model. J. Audio Eng. Soc. 61, 385–402.

Bisgaard N, Vlaming MS, and Dahlquist M, 2010. Standard audiograms for the IEC 60118–15 measurement procedure. Trends Amplif, 113–120. DOI: 10.1177/1084713810379609 [PubMed: 20724358]

Boll SF, 1979. Suppression of acoustic noise in speech using spectral subtraction. IEEE Trans. Acoust. Speech and Sig. Proc ASSP-27, 113–120. DOI: 10.1109/TASSP.1979.1163209

Breiman L, 1996. Bagging predictors. Mach. Learn. 24, 123–140. DOI: 10.1007/BF00058655

Bruce IC, Erfani Y, and Zilany MSA, 2018. A phenomenological model of the synapse between the inner hair cell and auditory nerve: Implications of limited neurotransmitter release sites. Hear. Res. 360, 40–54. DOI: 10.1016/j.heares.2017.12.016 [PubMed: 29395616]

Byrne D, and Dillon D, 1986. The National Acoustic Laboratories'(NAL) new procedure for selecting the gain and frequency response of a hearing aid. Ear and Hearing 7, 257–265. DOI: 10.1097/00003446-198608000-00007 [PubMed: 3743918]

Chen F, and Loizou PC, 2011. Predicting the intelligibility of vocoded and wideband Mandarin Chinese. J. Acoust. Soc. Am. 129, 3281–3290. DOI: 10.1121/1.3570957 [PubMed: 21568429]

Chen F, Wong LNN, and Hu Y, 2014. Effects of lexical tone contour on Mandarin sentence intelligibility. J. Speech Lang. Hear. Res 57, 338–345. DOI: 10.1044/1092-4388(2013/12–0324) [PubMed: 24023383]

Chen G, and Parsa V, 2007. Loudness pattern-based speech quality evaluation using Bayesian modeling and Markov chain Monte Carlo methods. J. Acoust. Soc. Am. 121, EL77–EL83. DOI: 10.1121/1.2430765 [PubMed: 17348550]

Ching TYC, Dillon H, Byrne D, 1998. Speech recognition of hearing impaired listeners: predictions from audibility and the limited role of high-frequency amplification. J. Acoust. Soc. Am. 103, 1128–1140. DOI: 10.1121/1.421224 [PubMed: 9479766]

Clark NR, Brown GJ, Jürgens T, and Meddis R 2012. A frequency-selective feedback model of auditory efferent suppression and its impact for the recognition of speech in noise. J. Acoust. Soc. Am. 132, 1535–1541. DOI: 10.1121/1.4742745 [PubMed: 22978882]

Cooke M, 1991. Modeling auditory processing and organization. PhD Thesis, U. Sheffield, May 1991.

Cooper NP, and Rhode WS, 1997. Mechanical responses to two-tone distortion products in the apical and basal turns of the mammalian cochlea. J. Neurophysiol. 78, 261–270. DOI: 10.1152/jn.1997.78.1.261 [PubMed: 9242278]

Dau T, Kollmeier B, and Kohlrausch A, 1997. Modelling auditory processing of amplitude modulation. I: Detection and masking with narrow-band carriers. J. Acoust. Soc. Am. 102, 2892–2905. DOI: 10.1121/1.420344 [PubMed: 9373976]

Daneman M, and Carpenter PA, 1980. Individual differences in working memory and reading. J. Verbal Learn. Verbal Behav. 19, 450–466. DOI: 10.1016/S0022-5371(80)90312-6

Domingos P, 2000. Bayesian averaging of classifiers and the overfitting problem. In Proceedings of the 17th International Conference on Machine Learning (Morgan Kaufmann, San Francisco), pp. 223–230.

Author Manuscript Author Manuscript Author Manuscript Author Manuscript

Elhilali M, Chi T, Shamma SA, 2003. A spectro-temporal modulation index (STMI) for assessment of speech intelligibility. Speech Comm. 41, 331–348. DOI: 10.1016/S0167-6393(02)00134-6

Ewert SD, and Dau T, 2000. Characterizing frequency selectivity for envelope fluctuations. J. Acoust. Soc. Am. 108, 1181–1196. DOI: 10.1121/1.1288665 [PubMed: 11008819]

Ewert SD, Verhey JL, and Dau T, 2002. Spectro-temporal processing in the envelope-frequency domain. J. Acoust. Soc. Am. 112, 2921–2931. DOI: 10.1121/1.1515735 [PubMed: 12509013]

Feng Y, and Chen F, 2022. Nonintrusive objective measurement of speech intelligibility: A review of methodology. Biomed. Sig. Proc. Control 71, paper 103204. DOI: 10.1016/j.bspc.2021.103204

Ferry RT, and Meddis R 2007. A computer model of medial efferent suppression in the mammalian auditory system. J. Acoust. Soc. Am. 122, 3519–3526. DOI: 10.1121/1.2799914 [PubMed: 18247760]

French NR, and Steinberg JC, 1947. Factors governing the intelligibility of speech sounds. J. Acoust. Soc. Am. 19, 90–119. DOI: 10.1121/1.1916407

Fuchs PA, and Lauer AM 2019. Efferent inhibition in the cochlea. Cold Spring Harb. Perspect. Med. 9:a033530. DOI: 10.1101/cshperspect.a033530 [PubMed: 30082454]

Haro S, Smalt CJ, Ciccarelli GA, and Quatieri TF, 2020. Deep neural network model of hearing-impaired speech-in-noise perception. Front Neurosci 14: 588448. DOI: 10.3389/fnins.2020.588448 [PubMed: 33384579]

Harris DM, and Dallos P, 1979. Forward masking of auditory nerve fiber responses. J. Neurophys. 42, 1083–1107. DOI: 10.1152/jn.1979.42.4.1083

Heinz MG, Zhang X, Bruce IC, and Carney LH, 2001. Auditory nerve model for predicting performance limits of normal and impaired listeners. Acoust. Res. Letters Online 2, 91–96. DOI: 10.1121/1.1387155

Hicks ML, and Bacon SP, 1999. Psychophysical measures of auditory nonlinearities as a function of frequency in individuals with normal hearing. J. Acoust. Soc. Am. 105, 326–338. DOI: 10.1121/1.424526 [PubMed: 9921659]

Houtgast T, and Steeneken HJM, 1985. A review of the MTF concept in room acoustics and its use for estimating speech intelligibility in auditoria. J. Acoust. Soc. Am. 77, 1069–1077. DOI: 10.1121/1.392224

Hu Y and Loizou PC, 2008. Evaluation of objective quality measures for speech enhancement. IEEE Trans Audio Speech Lang. Proc 16, 229–238. DOI: 10.1109/TASL.2007.911054

Huber R, and Kollmeier B, 2006. PEMO-Q: A new method for objective audio quality assessment using a model of auditory perception. IEEE Trans. Audio Speech Lang. Proc 14, 1902–1911. DOI: 10.1109/TASL.2006.883259

Huber R, Parsa V, and Scollie S, 2014. Predicting the perceived sound quality of frequency-compressed speech. PLoS ONE 9, Art. no. e110260. DOI: 10.1371/journal.pone.0110260

Johnson DH, 1980. The relationship between spike rate and synchrony in responses of auditory-nerve fibers to single tones. J. Acoust. Soc. Am. 68, 1115–1122. DOI: 10.1121/1.384982 [PubMed: 7419827]

Jørgensen S, and Dau T, 2011. Predicting speech intelligibility based on the signal-to-noise envelope power ratio after modulation-frequency selective processing. J. Acoust. Soc. Am. 130, 1475–1487. DOI: 10.1121/1.3621502 [PubMed: 21895088]

Kates JM, 1991. A time domain digital cochlear model. IEEE Trans. Sig. Proc. 39, 2573–2592. DOI: 10.1109/78.107409

Kates JM, 2013. An auditory model for intelligibility and quality predictions. Proc. Mtgs. Acoust. (POMA) 19, 050184: Acoust. Soc. Am. 165th Meeting. Montreal June 2–7, 2013. DOI: 10.1121/1.4799223

Kates JM, 2017. Modeling the effects of single-microphone noise suppression. Speech Comm. 90, 15–25. DOI: 10.1016/j.specom.2017.04.004

Kates J, and Arehart K, 2005. Coherence and the speech intelligibility index. J. Acoust. Soc. Am. 117, 2224–2237. DOI: 10.1121/1.1862575 [PubMed: 15898663]

Kates JM and Arehart KH, 2014. The hearing-aid speech quality index (HASQI) version 2. J. Audio Eng. Soc. 62, 99–117. DOI: 10.17743/jaes.2014.0006

Author Manuscript Author Manuscript Author Manuscript Author Manuscript

Kates JM, and Arehart KH, 2015. Comparing the information conveyed by envelope modulation for speech intelligibility, speech quality, and music quality. J. Acoust. Soc. Am. 138, 2470–2482. DOI: 10.1121/1.4931899 [PubMed: 26520329]

Kates JM and Arehart KH, 2021. The hearing-aid speech perception index (HASPI) version 2. Speech Comm. 131, 35–46. DOI: 10.1016/j.specom.2020.05.001

Kates JM, Arehart KH, Anderson MC, Muralimanohar RK, and Harvey LO Jr., 2018. Using objective metrics to measure hearing aid performance. Ear Hear. 39, 1165–1175. DOI: 10.1097/AUD.0000000000000574 [PubMed: 29554034]

Kates JM, Arehart KH, and Souza PE, 2013. Integrating cognitive and peripheral factors in predicting hearing-aid processing effectiveness. J. Acoust. Soc. Am. 134, 4458–4469. DOI: 10.1121/1.4824700 [PubMed: 25669257]

Kiessling J, 1993. Current approaches to hearing aid evaluation. J. Speech-Lang. Path. and Audiol. Monogr. Suppl. 1, 39–49.

Killion MC, Niquette PA, Gudmundsen GI, Revit LJ, and Banerjee S, 2004. Development of a quick speech-in-noise test for measuring signal-to-noise ratio loss in normal-hearing and hearing-impaired listeners. J. Acoust. Soc. Am. 116, 2395–2405. DOI: 10.1121/1.1784440 [PubMed: 15532670]

Kittler J, 1998. Combining classifiers: A theoretical framework. Pattern Anal. Appl. 1, 18–27. DOI: 10.1007/BF01238023

Kryter KD, 1962. Methods for the calculation and use of the Articulation Index, J. Acoust. Soc. Am. 34, 1689–1697. DOI: 10.1121/1.1909094

Liberman MC, 2017. Noise-induced and age-related hearing loss: new perspectives and potential therapies. F1000Research 2017, 6(F1000 Faculty Rev):927 Last updated: 16 JUN 2017. DOI: 10.12688/f1000research.11310.1

Lim JS, and Oppenheim AV, 1979. Enhancement and bandwidth compression of noisy speech. Proc. IEEE 67, 1586–1604. DOI: 10.1109/PROC.1979.11540

Lopez-Poveda EA, and Barrios P 2013. Perception of stochastically undersampled sound waveforms: A model of auditory deafferentation. Front. Neurosci. 7, article 124. DOI: 10.3389/fnins.2013.00124 [PubMed: 23882176]

Lundberg EMH, Chon S-H, Kates JM, Anderson MC, and Arehart KH, 2020. The type of noise influences quality ratings for noisy speech in hearing aid users. J Speech Lang. Hear. Res. 63, 4300–4313. DOI: 10.1044/2020_JSLHR-20-00156

McAulay RJ, and Malpass ML, 1980. Speech enhancement using a soft-decision noise suppression filter. IEEE Trans. Acoust. Speech and Sig. Proc. ASSP-28, 137–145. DOI: 10.1109/TASSP.1980.1163394

McCloy DR, Wright RA, and Souza PE, 2015. Talker versus dialect effects on speech intelligibility: A symmetrical study. Lang. Speech 58, 371–386. DOI: 10.1177/0023830914559234 [PubMed: 26529902]

Ma J, and Loizou PC, 2011. SNR loss: A new objective measure for predicting the intelligibility of noise-suppressed speech. Speech Comm. 53, 340–354. DOI: 10.1016/j.specom.2010.10.005

Mitra V, Franco H, Graciarena M, and Mandal A, 2012. Normalized amplitude modulation features for large vocabulary noise-robust speech recognition. Proc. IEEE International Conference on Acoustics, Speech and Signal Processing, 4117–4120, Kyoto, March 25–30. DOI: 10.1109/ICASSP.2012.6288824

Moore BCJ, and Glasberg BR, 1983. Suggested formulae for calculating auditory-filter bandwidths and excitation patterns. J. Acoust. Soc. Am. 74, 750–753. DOI: 10.1121/1.389861 [PubMed: 6630731]

Moore BCJ, Tan C-T, Zacharov N, and Mattila V-V, 2004. Measuring and predicting the perceived quality of music and speech subjected to combined linear and nonlinear distortion. J. Audio Eng Soc. 52, 1228–1244.

Moore BCJ, Vickers DA, Plack CJ, and Oxenham AJ, 1999. Inter-relationship between different psychoacoustic measures assumed to be related to the cochlear active mechanism. J. Acoust. Soc. Am. 106, 2761–2778. DOI: 10.1121/1.428133 [PubMed: 10573892]

Author Manuscript Author Manuscript Author Manuscript Author Manuscript

Nilsson M, Soli SD, and Sullivan JA, 1994. Development of the Hearing in Noise Test for the measurement of speech reception thresholds in quiet and in noise. J. Acoust. Soc. Am. 95, 1085–1099. DOI: 10.1121/1.408469 [PubMed: 8132902]

Patterson RD, Allerhand MH, and Giguère C, 1995. Time-domain modeling of peripheral auditory processing: A modular architecture and a software platform. J. Acoust. Soc. Am. 98, 1890–1894. DOI: 10.1121/1.414456 [PubMed: 7593913]

Pavlovic CV, Studebaker GA, Sherbecoe RL, 1986. An articulation index based procedure for predicting the speech recognition performance of hearing-impaired individuals," J. Acoust. Soc. Am. 80, 50–57. DOI: 10.1121/1.394082 [PubMed: 3745665]

Plack CJ, and Oxenham AJ, 2000. Basilar-membrane nonlinearity estimated by pulsation threshold. J. Acoust. Soc. Am. 107, 501–507. DOI: 10.1121/1.428318 [PubMed: 10641658]

Rothauser EH, 1969. IEEE Recommended Practice for Speech Quality Measurements. IEEE Trans. Audio Electroacoustics 17, 225–246.

Ruggero MA, Rich NC, Recio A, Narayan S, and Robles L, 1997. Basilar-membrane responses to tones at the base of the chinchilla cochlea. J. Acoust. Soc. Am. 101, 2151–2163. DOI: 10.1121/1.418265 [PubMed: 9104018]

Rumelhart DE, Hinton GE, and Williams RJ, 1986. Learning internal representations by error propagation. In: Rumelhart D, McClelland F (Eds.), Parallel Distributed Processing Vol. 1. MIT Press, Cambridge Mass.

Spille C, Ewert SD, Kollmeier B, and Meyer BT, 2018. Predicting speech intelligibility with deep neural networks. Comp. Speech Lang. 48, 51–66. DOI: 10.1016/j.csl.2017.10.004

Steinmetzger K, Zaar J, Relaño-Iborra H, Rosen S, and Dau T, 2019. Predicting the effects of periodicity on the intelligibility of masked speech: An evaluation of different modelling approaches and their limitations. J. Acoust. Soc. Am. 146, 2562–2576. DOI: 10.1121/1.5129050 [PubMed: 31671986]

Studebaker GA, Pavlovic CV, and Sherbecoe RL 1987. A frequency importance function for continuous discourse. J. Acoust. Soc. Am. 81, 1130–1138. [PubMed: 3571730]

Suzuki Y, and Takeshima H, 2004. Equal-loudness-level contours for pure tones. J. Acoust. Soc. Am. 116, 918–933. DOI: 10.1121/1.1763601 [PubMed: 15376658]

Taal CH, Hendriks RC, Heusdens R, and Jensen J, 2011. An algorithm for intelligibility prediction of time-frequency weighted noisy speech. IEEE Trans. Audio Speech Lang. Proc. 19, 2125–2136. DOI: 10.1109/TASL.2011.2114881

Tu JV, 1996. Advantages and disadvantages of using artificial neural networks versus logistic regression for predicting medical outcomes. J. Clin. Epidemiol 49, 1255–1231. DOI: 10.1016/S0895-4356(96)00002-9

Valente M, Abrams H, Benson D, Chisolm T, Citron D, Hampton D, Loavenbruck A, Ricketts T, Solodar H, and Sweetow R, 2006. Guidelines for the audiologic management of adult hearing impairment. Audiology Today 18, 1–44.

Van Kuyk S, Bastiaan Kleijn W, and Richard C Hendriks, 2018. An instrumental intelligibility metric based on information theory, IEEE Sig Proc Letters 25, 115–119. DOI: 10.1109/LSP.2017.2774250

Wirtzfeld MR, Pourmand N, Parsa V, and Bruce IC, 2017. Predicting the quality of enhanced wideband speech with a cochlear model. J. Acoust. Soc. Am. 142, EL319–EL325. DOI: 10.1121/1.5003785 [PubMed: 28964067]

Wojtczak M, Biem JA, Micheyl C, and Oxenham AJ, 2012. Perception of across-frequency asynchrony and the role of cochlear delay. J. Acoust. Soc. Am. 131, 363–377. DOI: 10.1121/1.3665995 [PubMed: 22280598]

Won JH, Drennan WR, and Rubinstein JT, 2007. Spectral-ripple resolution correlates with speech reception in noise in cochlear implant users. J. Assoc. Res. Otolaryngol. 8, 384–392. DOI: 10.1007/s10162-007-0085-8 [PubMed: 17587137]

Yamamoto K, Irino T, Araki S, Kinoshita K, and Nakatani T, 2020. GEDI: Gammachirp envelope distortion index for predicting intelligibility of enhanced speech. Speech Comm. 123, 43–58. DOI: 10.1016/j.specom.2020.06.001

Author Manuscript Author Manuscript Author Manuscript Author Manuscript

Yeung CWM, and Soman D, 2005. Attribute evaluability and the range effect. J. Consumer Res, 32, 363–369. DOI: 10.1086/497547

Yoo SD, Boston JR, El-Jaroudi A, Li C-C, Durrant JD, Kovacyk K, and Shaiman S, 2007. Speech signal modification to increase intelligibility in noisy environments. J. Acoust. Soc. Am. 122, 1138–1149. DOI: 10.1121/1.2751257 [PubMed: 17672660]

Zhang X, Heinz MG, Bruce IC, and Carney LH, 2001. A phenomenological model for the response of auditory nerve fibers: I. Nonlinear tuning with compression and suppression. J. Acoust. Soc. Am. 109, 648–670. DOI: 10.1121/1.1336503 [PubMed: 11248971]

Author Manuscript Author Manuscript Author Manuscript Author Manuscript

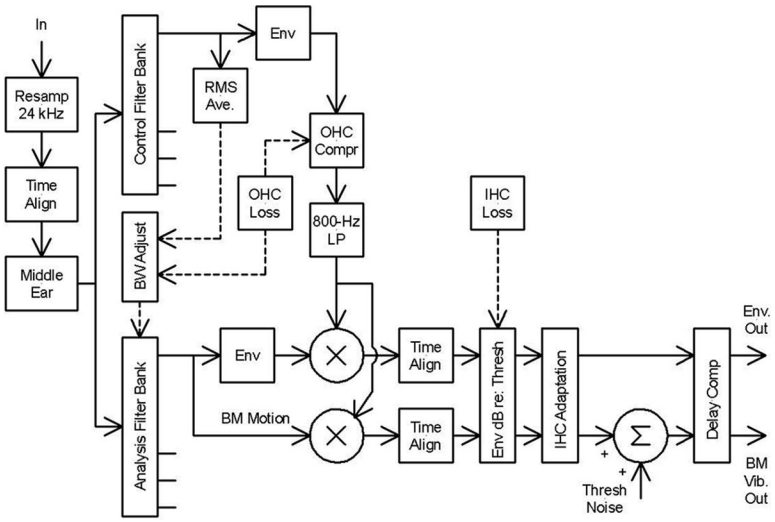

Figure 1.

Block diagram of the auditory periphery model used to extract the signals in each frequency band.

Author Manuscript Author Manuscript Author Manuscript Author Manuscript

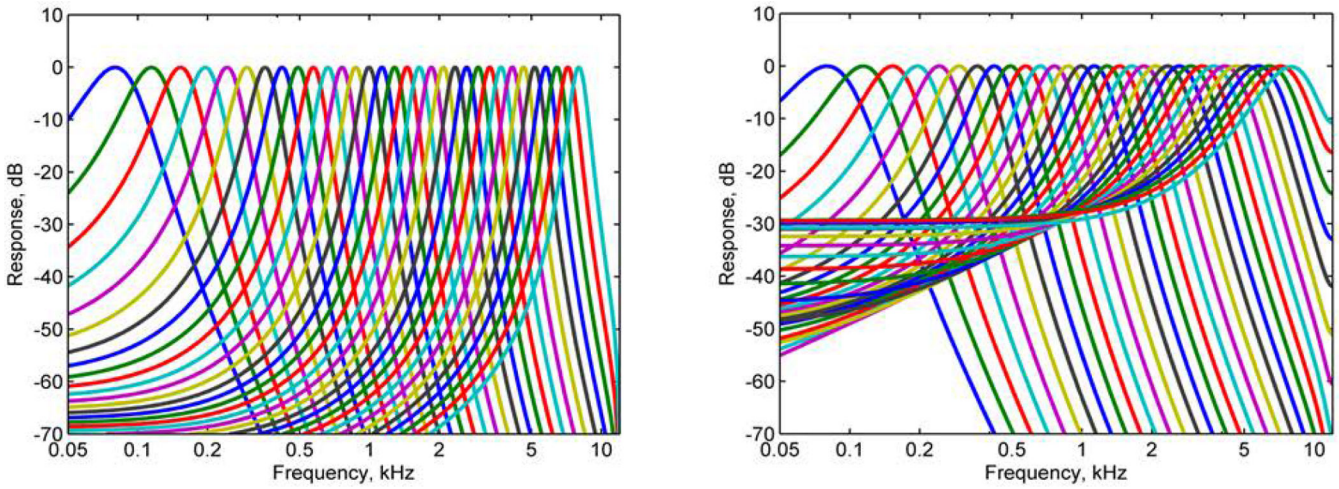

Figure 2.

Gammatone filters use in the peripheral model: normal hearing (left panel), maximum hearing loss or input signal intensity (right panel)

Author Manuscript Author Manuscript Author Manuscript Author Manuscript

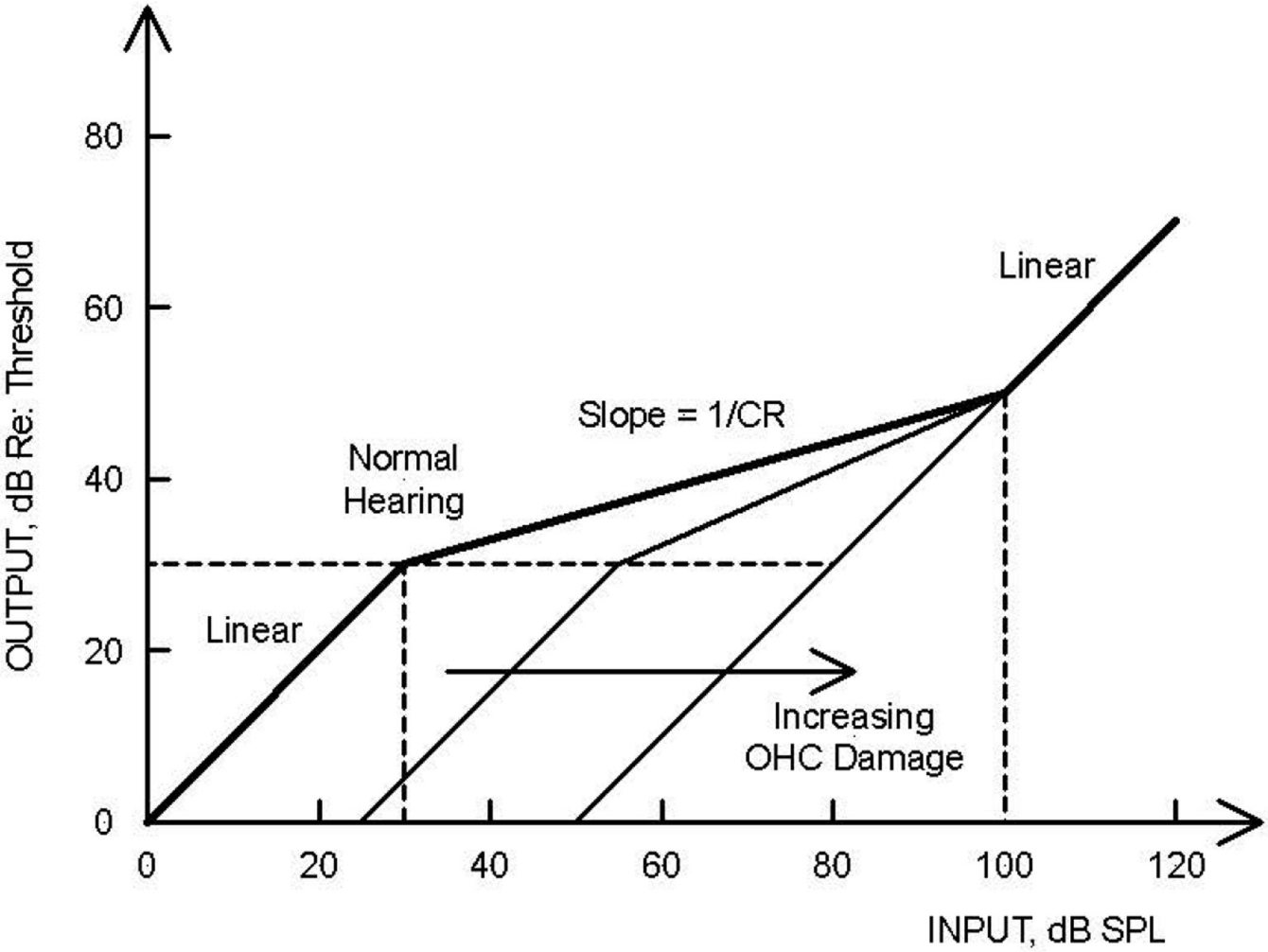

Figure 3.

Compression input-output rule as a function of OHC damage. The heavy solid line shows the dynamic-range compression for normal hearing, the light solid lines show the reduction in compression with increasing hearing loss. Maximum OHC damage results in a linear system (redrawn from Kates, 2013).

Author Manuscript Author Manuscript Author Manuscript Author Manuscript

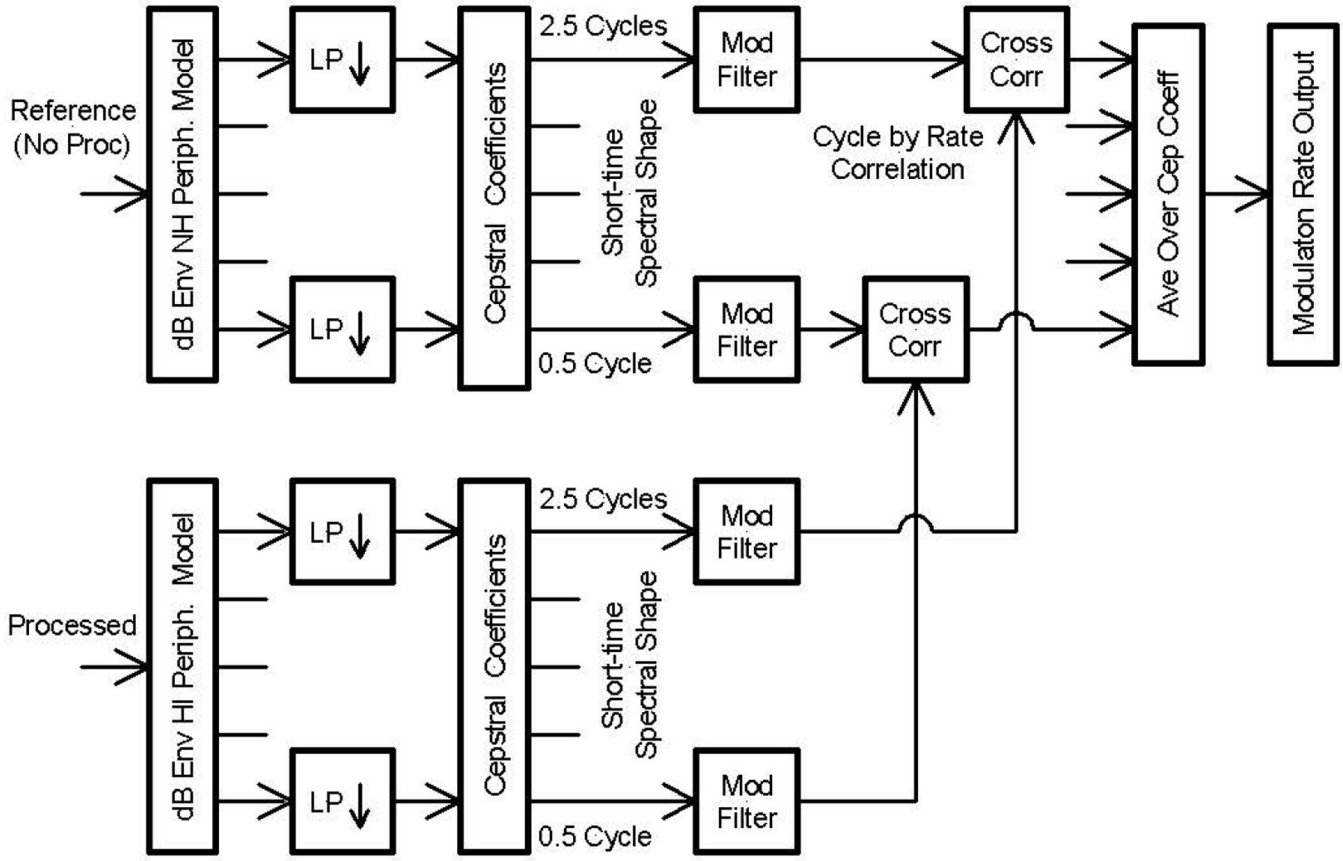

Figure 4.
Block diagram showing the steps involved in the HASPI version 2 calculation.

Author Manuscript Author Manuscript Author Manuscript Author Manuscript

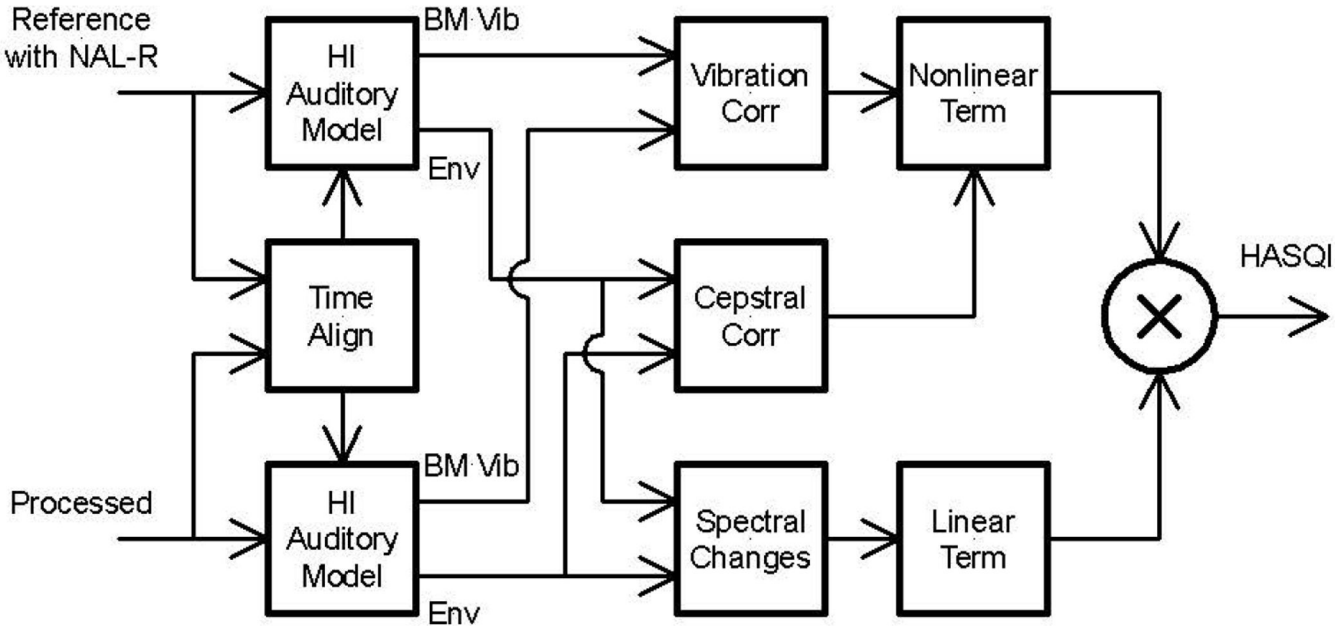

Figure 5.
Block diagram showing the steps involved in the HASQI version 2 calculation.

Author Manuscript Author Manuscript Author Manuscript Author Manuscript

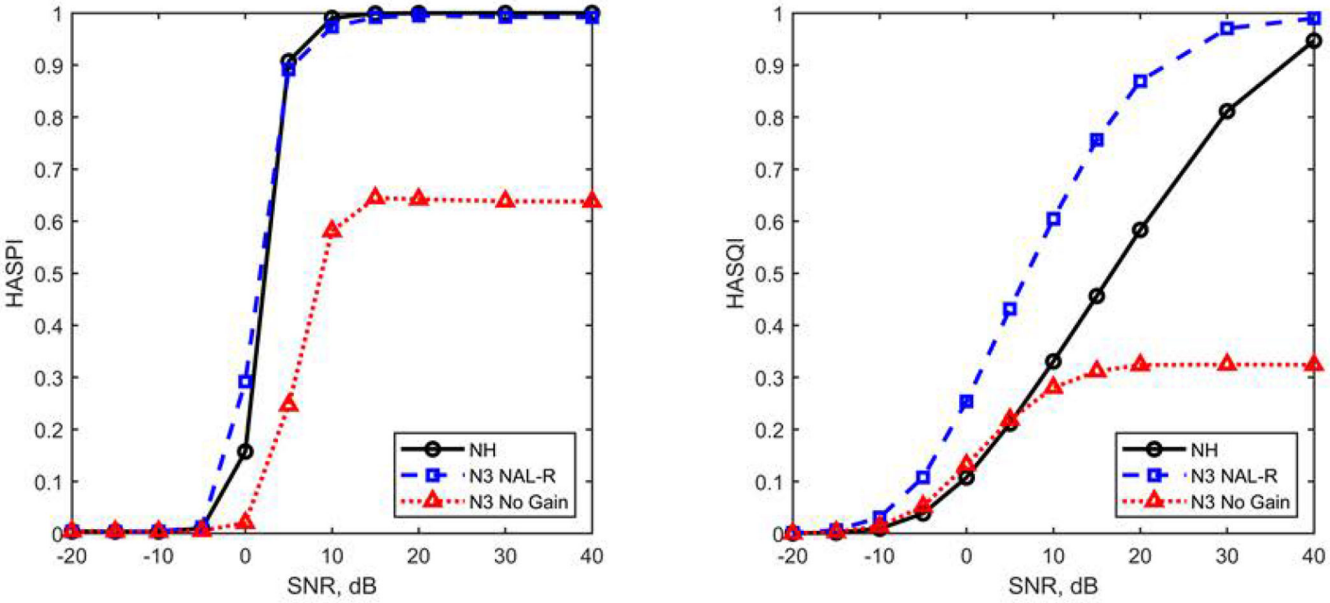

Figure 6.

HASPI (intelligibility, left panel) and HASQI (quality, right panel) predictions for a set of 20 sentences in LTASS noise as a function of SNR for normal hearing (NH, black solid line), a moderately sloping hearing loss with gain compensation (N3 NAL-R, blue dashed line), and the same loss without amplification (N3 No Gain, red dotted line).

Author Manuscript Author Manuscript Author Manuscript Author Manuscript

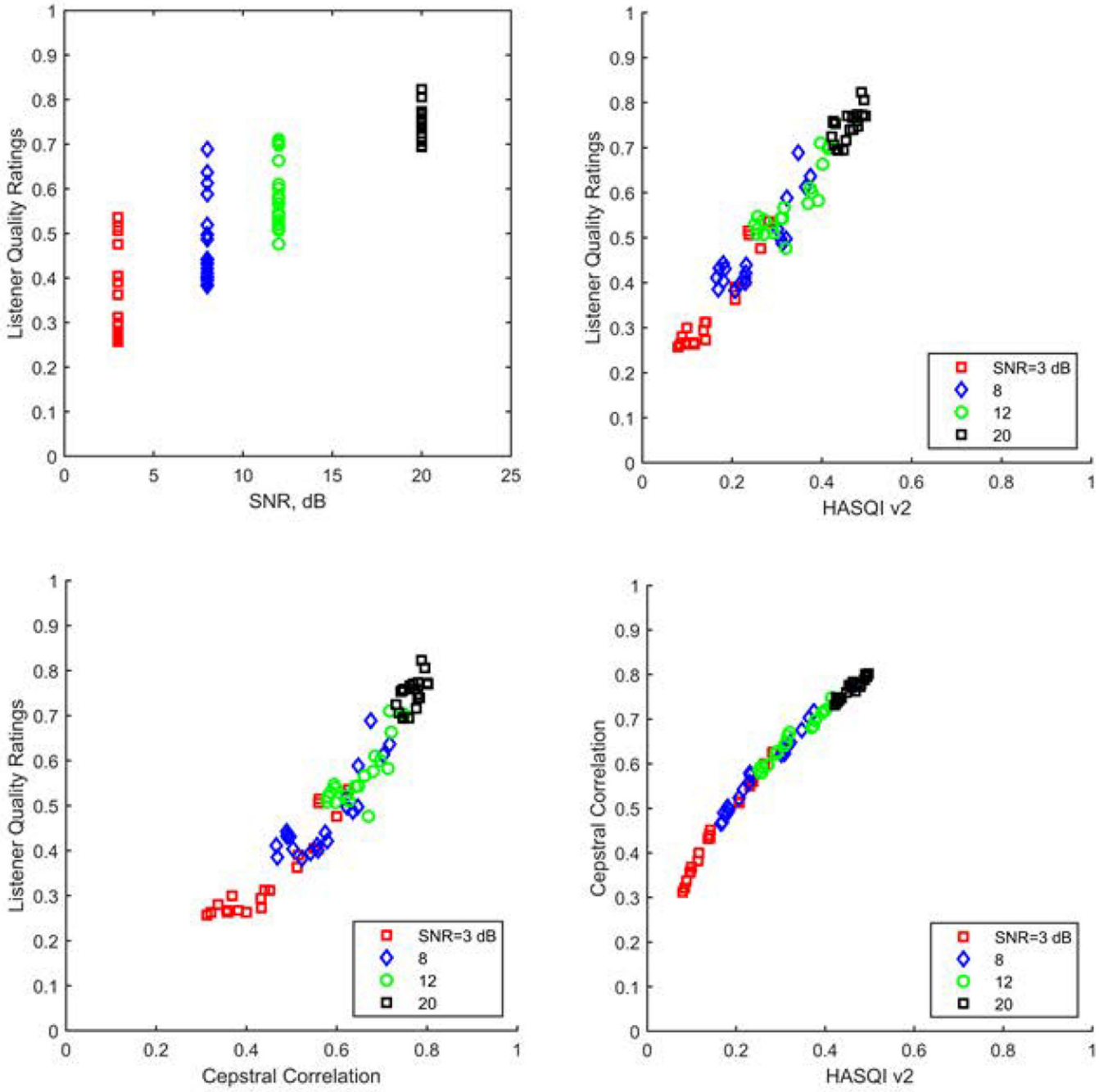

Figure 7.

Scatter plots showing the listener quality ratings for speech in additive noise as a function of cepstral correlation (left panel) and as a function of SNR (right panel) for the different types of noise. Each plot is fit with a linear regression.

Author Manuscript Author Manuscript Author Manuscript Author Manuscript

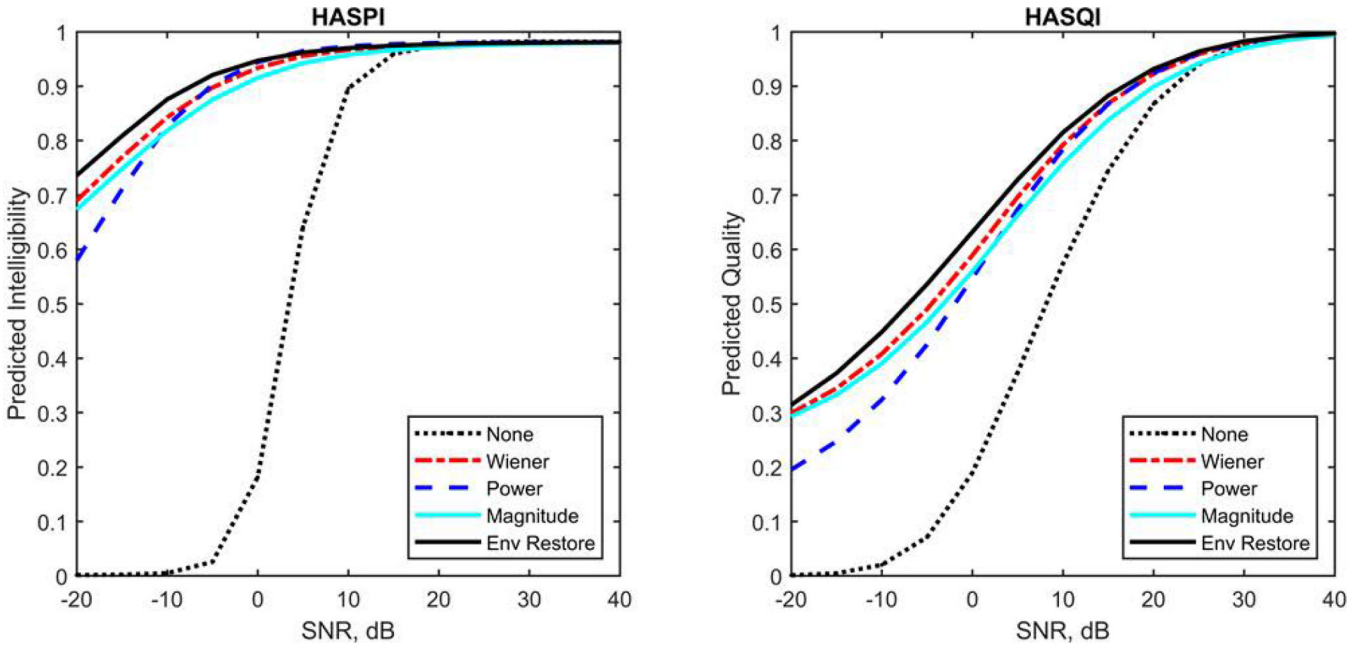

Figure 8.

Predicted intelligibility (HASPI, left panel) and quality (HASQI, right panel) for exact knowledge of the RMS noise level in each speech segment in each frequency band for an assumed moderately sloping (N3) hearing loss.

Author Manuscript Author Manuscript Author Manuscript Author Manuscript

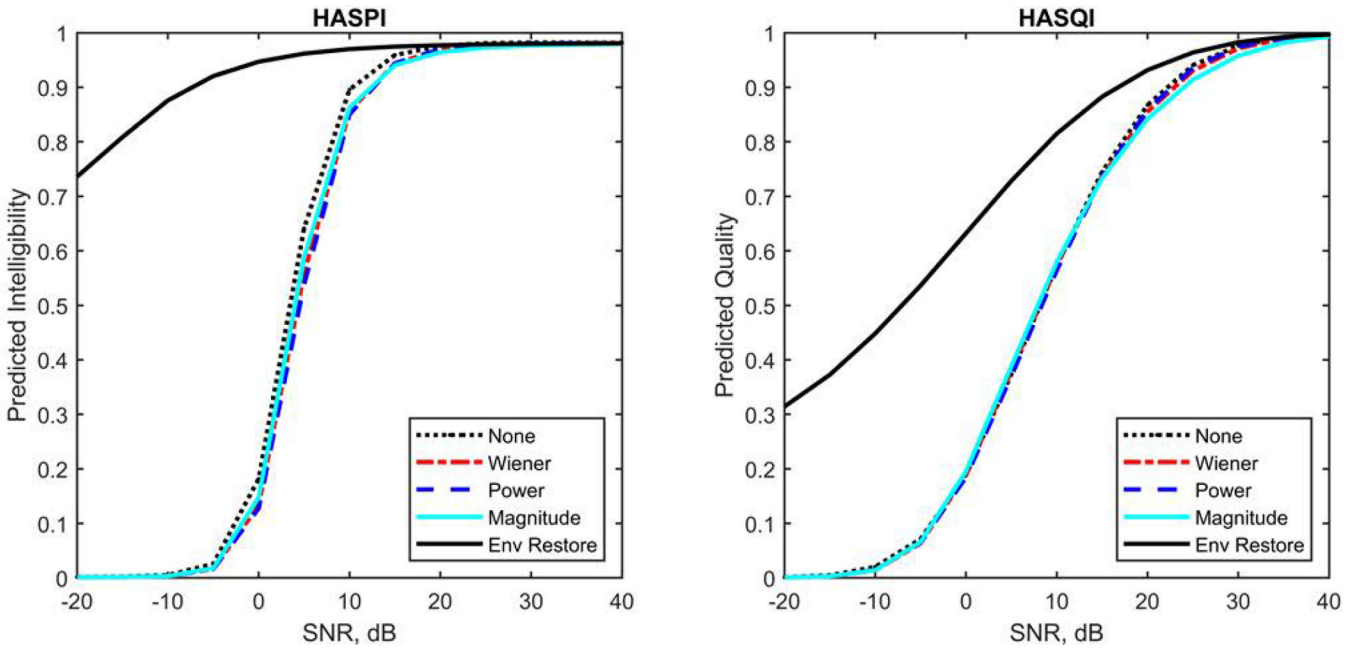

Figure 9.

Predicted intelligibility (HASPI, left panel) and quality (HASQI, right panel) for knowledge of just the RMS average noise level in each frequency band for an assumed moderately sloping (N3) hearing loss.

Author Manuscript Author Manuscript Author Manuscript Author Manuscript

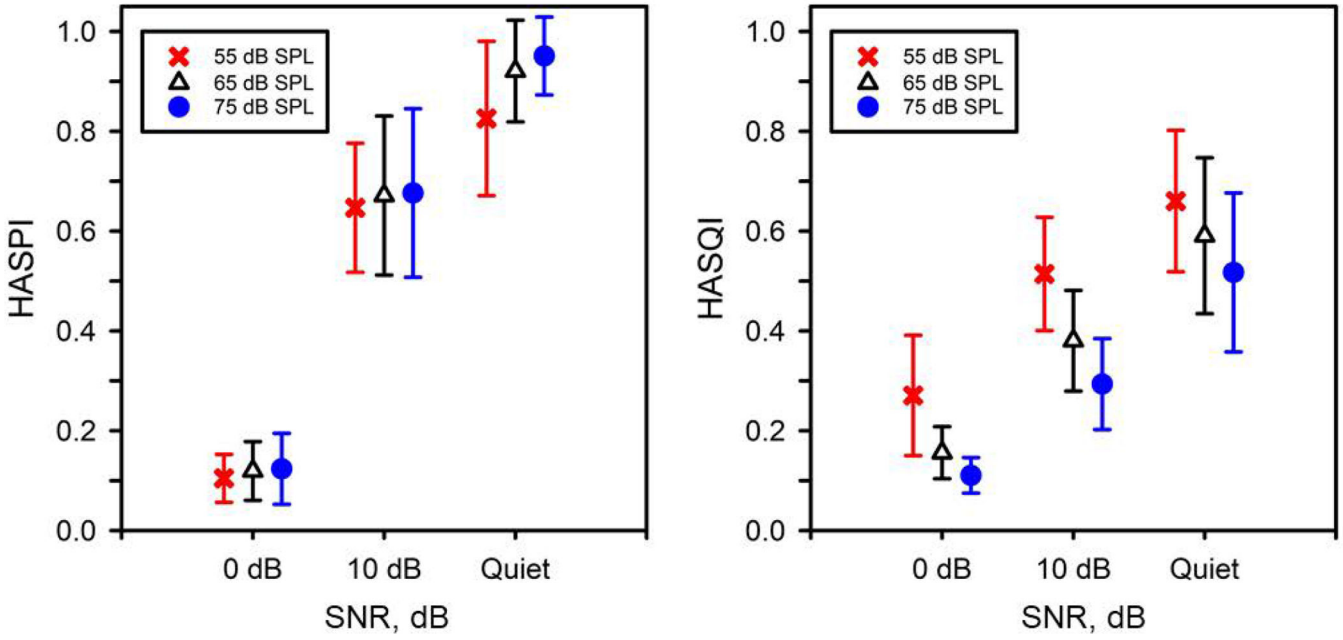

Figure 10.

HASPI (left panel) and HASQI (right panel) measured in hearing aids as a function of the SNR and presentation level, averaged over the hearing loss, degree of processing, manufacturer, and model. The error bars represent ±1 standard deviation (from Kates et al., 2018).

Author Manuscript Author Manuscript Author Manuscript Author Manuscript

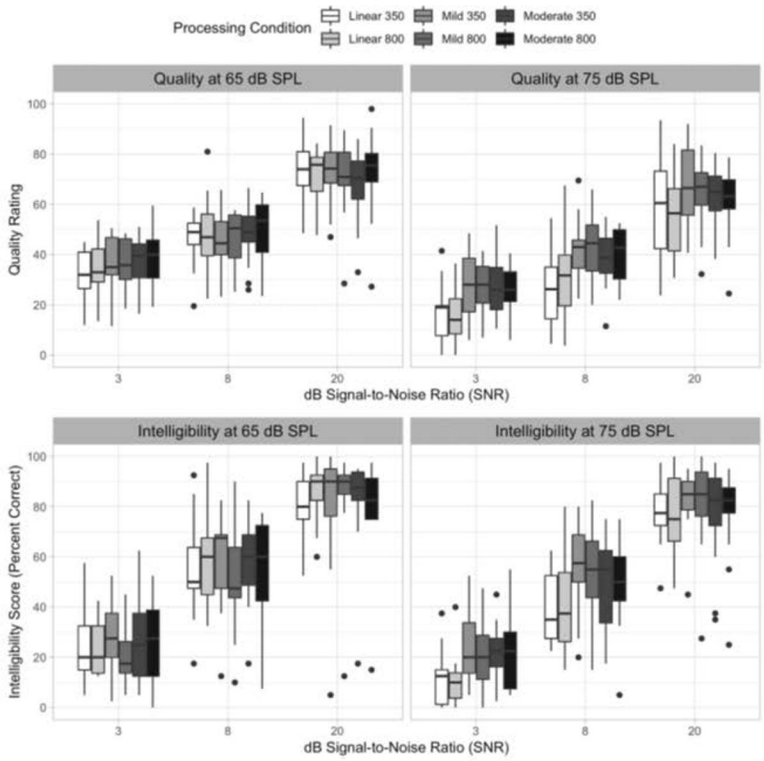

Figure 11.

Boxplots showing the intelligibility scores (lower panels) and quality ratings (upper panels) as a function of presentation level and SNR for different simulated hearing-aid processing and vent configurations. The 65-dB presentation level is shown in the left panels and the 75-dB presentation level in the right panels. Processing and venting are indicated by the shading shown in the legend at the top of the figure (from Arehart et al., 2022).

Author Manuscript

Author Manuscript

Author Manuscript

Author Manuscript

Table 1:

Correlation coefficients for hearing-impaired listener quality ratings of sentences combined with five different noises at four different SNRs. The variable in the first column is correlated with the variable in the second column.

First Variable	Second Variable	Pearson Linear	Spearman Rho	Kendall Tau
Listener Rating	SNR	0.8896	0.8843	0.7546
Listener Rating	HASQI Value	0.9744	0.9654	0.8393
Listener Rating	Cepstral Corr.	0.9613	0.9645	0.8393
Cepstral Corr.	HASQI Value	0.9866	0.9956	0.9544