CHAPTER 1

Introduction

1.1 Abstract

Urban drainage systems are critical infrastructures designed to manage wastewater, prevent flooding, and maintain environmental hygiene in cities[1]. With rapid urbanization and increasing population density, the maintenance of these underground drainage networks has become a challenging task for municipal authorities. Blockages caused by solid waste, silt, and debris often disrupt water flow, resulting in urban flooding, unhygienic conditions, and the accumulation of toxic gases. Traditional methods of inspection and maintenance rely heavily on manual labor, which exposes workers to hazardous gases, confined spaces, and the risk of accidents[2]. Additionally, conventional approaches are inefficient, time-consuming, and fail to provide real-time monitoring or predictive maintenance capabilities.

To address these challenges, this project proposes the design and development of an AI-enabled IoT autonomous drainage inspection and blockage removal robot. The proposed system integrates advanced robotics, artificial intelligence, and Internet of Things (IoT) technologies to provide a comprehensive solution for drainage maintenance. At the core of the system is a Raspberry Pi, which serves as the central controller, enabling real-time processing, decision-making, and communication with a web-based dashboard. The robot is equipped with a high-resolution camera module that enables computer vision-based object detection[3]. By utilizing frameworks such as OpenCV or YOLOv8, the system can accurately identify debris, blockages, and other anomalies within drainage pipelines. Once detected, the robot autonomously navigates towards the obstruction using DC geared motors, controlled through motor drivers, and engages mechanical cleaning mechanisms such as drills and conveyor belts to remove the debris efficiently.

Safety and environmental monitoring are integral to the proposed system. Sensors like the DHT11 monitor temperature and humidity levels, while the MQ-6 gas sensor detects the presence of hazardous gases such as methane or hydrogen sulfide[4]. Threshold-based alerts are sent to the remote monitoring dashboard, ensuring timely human intervention when necessary. The system also supports live video streaming, sensor data visualization, and alert notifications through a web interface implemented using the Flask framework. This enables municipal authorities or maintenance personnel to remotely monitor the robot's operation, assess pipeline conditions, and respond promptly to emerging issues.

The primary objectives of the project include the development of a robust Raspberry Pi-based control system, integration of AI-driven vision for accurate debris detection, implementation of real-time environmental monitoring, and creation of a reliable web interface for live monitoring and alerts. The robot's mechanical design focuses on durability, energy efficiency, and adaptability to operate in wet, confined, and hazardous environments. The combination of autonomous navigation, AI-enabled decision-making, and IoT-based monitoring provides a significant improvement over existing semi-automated or purely surveillance-based drainage inspection systems[5].

This integrated approach offers multiple benefits. It reduces the need for human intervention in hazardous environments, minimizes maintenance downtime, ensures timely detection and removal of blockages, and allows for predictive maintenance through continuous data logging. By leveraging AI and IoT technologies, the system can scale to inspect large urban drainage networks efficiently, ensuring cleaner, safer, and more resilient urban environments. Furthermore, the modular design allows future integration of additional sensors or actuators, enabling enhancements such as chemical monitoring, water quality assessment, or advanced obstacle negotiation[6].

In conclusion, the AI-enabled IoT autonomous drainage inspection and blockage removal robot represents a significant advancement in urban infrastructure management. It combines intelligent navigation, real-time environmental monitoring, AI-based object detection, and autonomous cleaning in a single platform. The system not only addresses the immediate problem of drainage blockages but also contributes to long-term urban planning by providing actionable insights, predictive maintenance data, and a scalable solution for smart city initiatives. The integration of robotics, AI, and IoT in this project exemplifies the potential of modern technology to improve public health, environmental safety, and operational efficiency in urban infrastructure systems.

1.2 Introduction

Urbanization is rapidly transforming cities worldwide, resulting in higher population density, increased industrial activity, and expanded urban infrastructure. As cities grow, maintaining critical urban systems becomes increasingly complex, particularly underground drainage networks.[1] These drainage systems are vital for managing wastewater, preventing urban flooding, and maintaining hygienic living conditions. Blockages in drainage pipelines caused by accumulated solid waste, silt, grease, and other debris are a common issue faced by municipalities. Such blockages disrupt the smooth flow of wastewater, resulting in overflows

that damage public property, degrade environmental quality, and pose serious health hazards. Toxic gases such as methane and hydrogen sulfide can accumulate within blocked drains, creating unsafe conditions for human workers and nearby residents[2]. In severe cases, untreated wastewater overflow can lead to contamination of water bodies, breeding grounds for disease vectors, and other environmental disasters.[3]

Traditional methods of inspection and maintenance for drainage systems are primarily manual. Human operators enter pipelines with flashlights, tools, and basic CCTV inspection devices to detect and remove blockages. [4]This approach is extremely hazardous, time-consuming, and inefficient. Workers face confined spaces, low visibility, high humidity, toxic gas exposure, and the risk of physical injury or drowning. Moreover, manual maintenance is reactive rather than proactive, often addressing problems only after significant blockages have already caused damage. This leads to delayed responses, higher operational costs, and increased risk to public safety.[5]

With advancements in technology, there is a growing trend toward automating urban infrastructure management using robotics, artificial intelligence (AI), and the Internet of Things (IoT). Autonomous robotic systems offer the capability to navigate pipelines without human intervention, reducing risk and improving operational efficiency.[6] Computer vision algorithms enable robots to detect and classify debris or obstructions in real time, while IoT devices provide continuous environmental monitoring and enable remote supervision. The integration of these technologies provides an opportunity to transform traditional drainage maintenance into a smart, autonomous, and safe system.[7]

Current research and commercial solutions in the field of drainage maintenance have focused on a few approaches: manual CCTV inspection, semi-automated robots with limited cleaning functionality, and IoT-based monitoring for water levels or blockages. While these systems offer partial solutions, they are often limited in scope[8]. CCTV inspection requires human operation and interpretation, semi-automated robots cannot make intelligent decisions on debris removal, and IoT sensors typically detect problems but cannot actively address them. Additionally, most existing solutions lack real-time integration of safety alerts, environmental monitoring, and live video streaming, which are crucial for proactive maintenance and operational oversight.[9]

The proposed project aims to address these limitations by designing an AI-enabled IoT autonomous drainage inspection and blockage removal robot. This system is capable of autonomously navigating pipelines, detecting blockages using AI-based vision, and

mechanically removing debris using a drill and conveyor system. The robot integrates environmental sensors such as the DHT11 for temperature and humidity monitoring and the MQ-6 gas sensor for detecting hazardous gases. [10]All real-time data, including video feed and sensor readings, are transmitted to a web-based dashboard hosted using the Flask framework. This allows municipal authorities or maintenance personnel to monitor the system remotely, receive alerts, and take necessary actions promptly.[11]

At the heart of the system is a Raspberry Pi, selected for its capability to run both AI inference and web server applications simultaneously. High-resolution camera modules provide real-time video streams for object detection using OpenCV or YOLOv8, enabling accurate identification of debris, blockages, and obstacles.[12] DC geared motors with motor driver modules allow precise movement and maneuverability within pipelines, even in constrained and wet environments. Relay modules control the high-load actuators of the drill and conveyor independently, ensuring safe and effective debris removal.[13] The modular design of the robot allows for scalability and future enhancements, such as integration of additional sensors for chemical detection or more advanced cleaning mechanisms.

The importance of environmental monitoring cannot be understated. Drains often contain toxic gases, extreme humidity, and temperature variations that pose risks to both human workers and the robot's components. The integration of gas sensors, temperature sensors, and humidity sensors ensures operational safety and provides actionable alerts. Real-time monitoring through IoT further enables predictive maintenance, allowing authorities to plan cleaning operations efficiently and prevent large-scale overflows or blockages.[14]

By combining AI, robotics, and IoT, the proposed system represents a shift from reactive to proactive drainage management. Unlike traditional methods, this autonomous robot continuously monitors pipelines, detects blockages, removes debris, and logs data for analysis. It not only reduces human intervention in hazardous conditions but also improves operational efficiency, reduces maintenance costs, and ensures a cleaner, safer urban environment. Furthermore, the collected data can contribute to long-term urban planning, predictive maintenance, and optimization of drainage network design.[15]

1.3 Problem Statement

Urbanization has led to rapid expansion of cities, resulting in increased population density, industrial growth, and development of complex infrastructure networks. Among the critical components of urban infrastructure, drainage systems play a vital role in managing wastewater, preventing waterlogging, and maintaining hygienic conditions in residential, commercial, and

industrial areas. Proper functioning of these underground pipelines is essential to ensure smooth water flow, avoid flooding, and protect public health. However, drainage systems are increasingly prone to blockages caused by solid waste, sludge, silt, grease, and other debris, leading to significant operational challenges. These blockages not only disrupt the flow of wastewater but also contribute to environmental pollution, structural damage, and the formation of hazardous conditions such as toxic gases and unhygienic sludge accumulation.

Despite the critical importance of drainage maintenance, traditional inspection and cleaning methods are highly inadequate. Manual inspection typically involves workers entering narrow and confined pipelines with flashlights, basic tools, or handheld cameras. This approach exposes personnel to numerous hazards, including harmful gases such as methane, hydrogen sulfide, and ammonia, which are commonly found in blocked drains. High humidity, low visibility, slippery surfaces, and confined spaces increase the risk of accidents, injuries, and fatalities. Moreover, manual cleaning is extremely labor-intensive and time-consuming, often leading to delays in the identification and removal of blockages. As a result, minor obstructions can escalate into severe blockages, causing urban flooding, contamination of public spaces, and damage to infrastructure.

Furthermore, conventional inspection methods are largely reactive rather than proactive. Maintenance teams respond to reported issues instead of continuously monitoring pipelines for potential problems. This reactive approach increases operational costs and reduces the efficiency of urban drainage management. It also limits the ability to implement predictive maintenance strategies, which rely on real-time data and continuous monitoring to prevent major failures. In addition, existing semi-automated drainage robots and IoT-based monitoring systems have notable limitations. Many robotic systems can only traverse pipelines and provide video feeds without intelligent decision-making or autonomous cleaning capabilities. Similarly, IoT sensors used in current drainage systems may detect blockages or abnormal water levels, but they cannot remove debris autonomously, requiring human intervention for actual maintenance.

The integration of AI, IoT, and robotics in drainage maintenance has the potential to address these limitations. Artificial intelligence, particularly computer vision algorithms such as OpenCV and YOLOv8, can enable autonomous detection of debris and blockages within pipelines. IoT-based sensors can provide real-time environmental monitoring, detecting hazardous gases, temperature variations, and humidity levels, and sending alerts to maintenance personnel. Robotics can offer autonomous navigation and mechanical

intervention, including the use of drills and conveyor belts for debris removal. However, the current state of research reveals a gap: very few systems integrate all these capabilities into a single, autonomous platform. Most existing solutions are either limited to surveillance, partially automated cleaning, or isolated monitoring, lacking a fully intelligent and autonomous approach.

Another significant issue in drainage maintenance is the lack of real-time monitoring and remote accessibility. Municipal authorities often rely on periodic inspections or citizen reports to detect blockages. This results in delays between the formation of a blockage and its identification, potentially leading to severe urban flooding and environmental hazards. Real-time monitoring using IoT and AI can bridge this gap, providing continuous pipeline inspection, immediate detection of debris, and proactive removal mechanisms. Furthermore, by logging environmental and operational data, predictive maintenance strategies can be implemented, reducing downtime, costs, and risks associated with manual intervention.

Safety remains a critical concern in all conventional drainage inspection and cleaning methods. Workers face exposure to toxic gases that can lead to respiratory problems, dizziness, or even death in extreme cases. Flooded or partially obstructed pipelines pose drowning risks, while slippery surfaces and confined spaces increase the likelihood of physical injuries. Even semi-automated robots or camera systems cannot completely mitigate these risks unless they are designed to operate autonomously with integrated safety mechanisms. Hazard detection sensors, such as gas detectors and temperature/humidity monitors, combined with automated alerts, are therefore essential for ensuring safe and reliable operations.

The problem becomes even more complex in large urban environments where drainage networks are extensive, multi-layered, and interconnected. Manually inspecting every pipeline section is impractical, costly, and inefficient. Traditional methods fail to provide a scalable solution for large cities with hundreds of kilometers of underground drainage systems. A need exists for an intelligent, autonomous solution capable of navigating pipelines, detecting blockages, monitoring environmental conditions, and performing mechanical cleaning without human intervention. Such a solution must be energy-efficient, robust enough to operate in wet and confined conditions, and capable of providing live data to municipal authorities for timely decision-making.

Moreover, environmental and public health concerns exacerbate the problem. Blocked drains lead to water stagnation, breeding grounds for mosquitoes and other disease vectors, and contamination of surface water bodies. Overflowing wastewater affects residential areas,

schools, hospitals, and commercial zones, creating unhygienic and unsafe conditions. Conventional approaches are not capable of addressing these problems promptly due to the time delays associated with manual inspections and reactive maintenance. An autonomous solution can continuously monitor pipelines and provide proactive interventions, mitigating environmental hazards and improving urban sanitation.

The main challenge lies in integrating multiple technologies—robotics, AI, and IoT—into a unified platform that can operate autonomously in harsh environments. The robot must navigate complex pipeline geometries, detect blockages accurately using AI algorithms, and remove debris mechanically without damaging the pipeline or itself. It must also monitor environmental conditions, including gas concentrations, temperature, and humidity, and provide timely alerts through a web-based interface accessible to municipal authorities. Power management, mechanical robustness, real-time data processing, and reliable communication are additional technical challenges that must be addressed for a successful implementation.

1.4 Need of the Project

Urban drainage systems are an essential component of urban infrastructure, serving to manage wastewater, prevent flooding, and maintain environmental hygiene. These systems form the backbone of city sanitation and are critical for maintaining public health and safety. With the rapid growth of urban populations and industrialization, the demand on drainage networks has increased significantly. Modern cities face challenges of solid waste accumulation, silt deposition, grease buildup, and other debris obstructing the flow of wastewater through pipelines. Blocked drains can result in severe consequences, including urban flooding, damage to public and private property, contamination of water bodies, and the proliferation of disease-causing organisms. Addressing these challenges requires effective, timely, and safe inspection and maintenance methods.

Currently, the maintenance of drainage systems largely relies on manual inspection and cleaning. Workers physically enter pipelines with flashlights, rods, or handheld cameras to locate blockages. While some technological aids, such as CCTV cameras or semi-automated robots, are sometimes employed, these methods have major limitations. Manual inspection is inherently hazardous: confined spaces, low visibility, high humidity, and the presence of toxic gases such as methane, hydrogen sulfide, and ammonia put workers at serious risk of injury or death. Prolonged exposure to unhygienic environments increases health hazards, including respiratory problems, skin infections, and other occupational diseases. These risks make traditional maintenance approaches both inefficient and unsafe.

Furthermore, manual and semi-automated methods are time-consuming. Inspecting extensive urban drainage networks, which may span hundreds of kilometers, requires significant manpower and repeated effort. Delays in identifying and removing blockages often lead to escalation of minor obstructions into major problems, causing flooding, damage to roads, homes, and public infrastructure, and disruption of urban life. The conventional approach is reactive: maintenance teams respond to complaints or visible signs of blockage, rather than proactively monitoring pipelines. This reactive strategy limits the effectiveness of drainage maintenance and contributes to environmental and public health risks.

From a technological standpoint, there is a gap in integrating real-time monitoring, intelligent detection, and autonomous cleaning in drainage maintenance systems. CCTV inspection cameras only provide visual data, which must be manually analyzed, while semi-automated robots may only traverse pipelines without actively removing blockages. IoT-based monitoring solutions can detect abnormal water levels or presence of obstructions, but they lack mechanical intervention capabilities. Consequently, municipalities often face the challenge of identifying a problem through sensors or video feeds and then deploying human labor to physically clear the blockage, which reduces efficiency and increases operational costs.

The need for a safer, faster, and more efficient solution is further emphasized by environmental and public health concerns. Blocked drains lead to water stagnation, creating ideal conditions for mosquito breeding and the spread of vector-borne diseases like dengue, malaria, and chikungunya. Overflowing wastewater contaminates residential areas, schools, hospitals, and public spaces, posing a risk to community health. Moreover, stagnant water and debris accumulation produce foul odors and toxic gases, which negatively affect air quality and living conditions. A solution that allows continuous inspection, blockage detection, and removal without human intervention directly addresses these urgent public health and environmental issues.

Urban infrastructure management also demands scalability. Large cities have extensive and multi-layered drainage networks, making it impractical to rely solely on human inspection. The sheer volume of pipelines, combined with increasing urban waste generation, requires an automated and intelligent solution capable of operating continuously across multiple locations. By leveraging robotics, AI, and IoT, a system can provide proactive maintenance, real-time monitoring, and predictive insights, enabling municipalities to plan interventions efficiently and prevent major blockages before they escalate into serious problems.

Technological advancements in robotics, AI, and IoT make it possible to address these challenges effectively. Autonomous robots equipped with high-resolution cameras and AI-based vision algorithms can detect blockages with high accuracy. Computer vision models, such as OpenCV or YOLOv8, allow the robot to distinguish debris, sludge, and other obstructions, even in low-light or confined conditions. DC geared motors with motor drivers enable the robot to navigate pipelines smoothly, while mechanical actuators such as drills and conveyor belts remove debris efficiently. IoT-enabled environmental sensors monitor temperature, humidity, and toxic gas levels, providing alerts in real-time to prevent accidents and inform maintenance personnel.

The integration of real-time monitoring and remote accessibility further emphasizes the need for an AI-IoT autonomous system. Current drainage maintenance often requires on-site personnel to interpret data and make decisions. A web-based dashboard allows municipal authorities to monitor robot operation, receive live video feeds, track environmental parameters, and receive automatic alerts in case of abnormal readings. This remote access reduces the need for human presence in dangerous environments, improves response times, and allows better resource allocation for maintenance activities.

Safety considerations are paramount in drainage inspection. The accumulation of toxic gases, high humidity, and contaminated water makes manual intervention extremely hazardous. By implementing sensors such as DHT11 for temperature and humidity and MQ-6 for gas detection, an autonomous system can identify unsafe conditions and take preventive measures, including pausing operation or alerting operators. This ensures that human personnel are only required in safe situations and minimizes exposure to harmful environments.

Economic and operational efficiency is another driving factor. Autonomous systems reduce manpower requirements, minimize downtime, and optimize maintenance schedules. By continuously inspecting pipelines, detecting blockages early, and performing mechanical removal, municipalities can prevent costly flooding events, infrastructure damage, and public health emergencies. The ability to log operational and environmental data also facilitates predictive maintenance, reducing long-term costs and improving urban infrastructure planning.

Sustainability and environmental protection are additional reasons for the project. Blocked drains contribute to water contamination, soil pollution, and the spread of waterborne diseases. Proactive inspection and maintenance using an autonomous system ensure timely debris removal, clean pipelines, and reduced environmental impact. Real-time monitoring and alerts

allow for immediate corrective action, preventing wastewater overflow and minimizing pollution of urban water bodies.

In summary, the need for this project arises from multiple critical factors:

- Traditional drainage maintenance methods are hazardous, inefficient, and time-consuming.
- Blocked drains cause flooding, environmental pollution, and public health risks.
- Current semi-automated or IoT-based systems lack full autonomy, AI-based debris detection, and real-time mechanical cleaning.
- Urban drainage networks are extensive, requiring scalable solutions.
- Safety concerns necessitate minimal human intervention in hazardous environments.
- Real-time monitoring and remote accessibility improve operational efficiency and response times.
- Environmental sensors and alert systems reduce risk of accidents and contamination.
- Economic efficiency is enhanced by reducing manpower and infrastructure damage.
- Predictive maintenance is enabled through continuous data logging and analysis.
- Sustainable urban management and cleaner cities require proactive, intelligent solutions.

Therefore, the project proposes the design and development of an AI-enabled IoT autonomous drainage inspection and blockage removal robot that can navigate pipelines, detect and remove debris, monitor environmental conditions, and provide real-time alerts and data visualization. This system addresses the challenges of safety, efficiency, scalability, and environmental protection, offering a futuristic solution for smart urban infrastructure management.

1.5 Aim of the Project

To design and develop an AI-enabled IoT-based autonomous drainage inspection and blockage removal robot that can navigate pipelines, detect debris using computer vision, monitor hazardous environmental conditions, and remove blockages without human intervention, ensuring safer and more efficient urban drainage maintenance.

1.6 Objectives of the Project

1. To create a mobile robotic platform capable of navigating narrow drainage pipelines.
2. To integrate a camera for real-time visual inspection and blockage detection using AI and computer vision.

3. To install sensors (gas, temperature, humidity) for environmental monitoring and safety alerts.
4. To implement a mechanical system for debris removal and cleaning operations inside drains.
5. To enable IoT connectivity for live data transmission, remote monitoring, and control via web or mobile interface.
6. To reduce human involvement in hazardous drainage environments, enhancing safety and efficiency.
7. To collect and log operational data for predictive maintenance and smart city integration.

CHAPTER 2

2.1 Literature review

1. Paper 1: IoT-Based Automatic Drainage Cleaning Robot

   Authors: Poojitha Das et al.

   Summary: This paper presents an IoT-based automatic drainage cleaning system designed to replace manual labor in cleaning drainage systems. The system integrates sensors, actuators, and a control unit to detect blockages and initiate cleaning actions autonomously. The proposed solution aims to enhance the efficiency and safety of drainage maintenance operations.

2. Paper 2: Sewage Pipe Crawling Robot

   Authors: Poojitha Das et al.

   Summary: The paper discusses a method that combines robotics and IoT technology to detect water leaks in pipelines. The system involves a robot designed to traverse horizontal pipes, equipped with modules for pipe inspection. The design goals of the pipe inspection robot are thoroughly addressed, aiming to improve the efficiency and safety of pipeline maintenance.

3. Paper 3: An Autonomous Sewage Cleaning Mobile Robot

   Authors: R. Muthukumar et al.

   Summary: This paper proposes a mobile robot system architecture featuring an operation management map and an arbitration function. The architecture enables multiple mobile robots to operate smoothly, enhancing the efficiency of sewage cleaning processes. The paper highlights the integration of advanced technologies to address challenges in autonomous sewage cleaning.

4. Paper 4: Intelligent Drainage Cleaning and Monitoring System

   Authors: R. Muthukumar et al.

   Summary: The paper presents an IoT-enabled smart drainage and health monitoring system aimed at enhancing the safety and efficiency of manual scavengers. The system comprises two parts: smart drainage monitoring for tracking water flow and detecting blockages, and health monitoring to ensure the well-being of workers. The proposed

system seeks to improve the working conditions and effectiveness of drainage maintenance.

5. Paper 5: A Visually Assisted Cleaning Robot for Sewers
   Authors: B. Xiong et al.
   Summary: This paper introduces a visually assisted Sewer Cleaning Robot (SCR) designed for cleaning sewers with diameters ranging from 280 to 780 mm. The robot is equipped with a pressing mechanism to adapt to different pipe diameters and uses high-load linear actuators for enhanced load capacity and stability. The design aims to address the challenges of clearing obstacles in narrow and complex sewer systems.

6. Paper 6: AI-Driven IoT-Enabled UAV Inspection Framework
   Authors: Not specified
   Summary: The paper proposes an AI-assisted IoT-enabled UAV inspection framework for monitoring and predictive maintenance of desalination plants. The framework aims to transform traditional inspection methods by integrating AI and IoT technologies, enhancing the efficiency and sustainability of operations. The proposed system addresses the challenges of conventional inspection methods, which are often labor-intensive and time-consuming.

7. Paper 7: Raptor: A Design of a Drain Inspection Robot
   Authors: MAVJ Muthugala et al.
   Summary: This paper proposes a novel design of a drain inspection robot named Raptor. The robot features a manually reconfigurable wheel axle mechanism, allowing for changes in ground clearance height. The design incorporates a fuzzy logic controller to maintain the robot's position in the middle of a drain during movement, enhancing the efficiency and autonomy of the inspection process.

8. Paper 8: Industry 4.0 Pipeline Inspection Robots
   Authors: Not specified
   Summary: This study explores the challenges, opportunities, and innovative solutions related to pipeline inspection robots in Industry 4.0. The incorporation of this technology aids in resolving issues such as fluid or gas pipeline leaks, rust

accumulation, and broken pipes. The paper discusses the drawbacks of pipeline inspection robots and potential opportunities, proposing solutions to optimize their performance and integration into modern industrial systems.

9. Paper 9: Underground Pipeline Sewage Cleaning Robot
   Authors: Not specified
   Summary: The paper presents the design and implementation of an IoT-based sewage cleaning robot aimed at minimizing human exposure to unsafe and unsanitary conditions. The robot is equipped with an infrared (IR) camera and IR sensors for real-time detection of blockages inside sewage pipelines. The proposed solution seeks to improve the efficiency and safety of sewage cleaning operations.

10. Paper 10: Gas Pipe Leakage Inspection Robot
    Authors: Not specified
    Summary: This review paper focuses on pipe inspection robots designed to detect gas leaks in pipelines. The study discusses the advancements in robotic technologies for pipeline inspection, highlighting the importance of early detection of gas leaks to prevent potential hazards. The paper examines various robotic solutions and their effectiveness in identifying and addressing gas pipeline issues.

2.2 Block Diagram

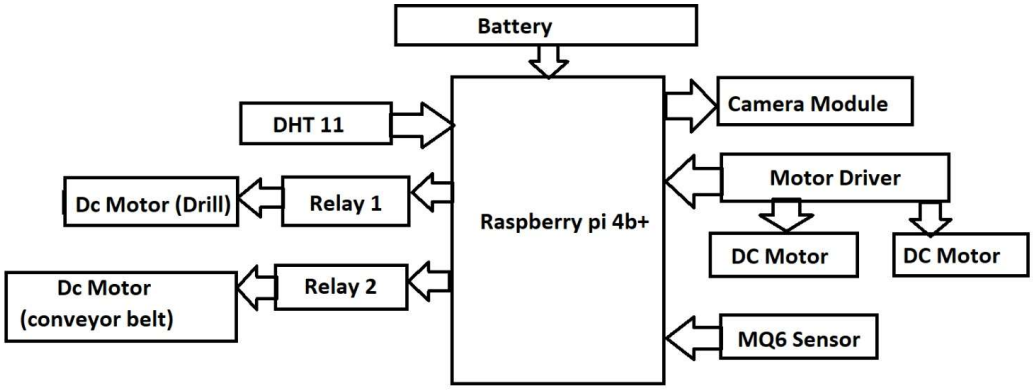

Fig: System Block diagram

2.2.1 Block Diagram Explanation:

The block diagram of the AI-Enabled IoT Autonomous Drainage Inspection and Blockage Removal Robot illustrates the overall system architecture, showing the interaction between hardware components, sensors, control units, and communication modules. At the core of the system lies the Raspberry Pi, which functions as the central processing unit responsible for decision-making, sensor data processing, and communication. It receives visual input from the camera module, which continuously captures live footage of the drainage pipeline. This video stream is processed using AI and computer vision algorithms (OpenCV/YOLO), enabling the robot to detect blockages, solid waste, sludge, or anomalies inside the drainage.

Alongside the vision system, the Raspberry Pi is interfaced with multiple environmental sensors such as the MQ gas sensor for hazardous gas detection and the DHT11 sensor for monitoring temperature and humidity levels. These sensors provide real-time safety information, ensuring that the robot can identify toxic conditions and generate necessary alerts. The motor driver module is connected to the Raspberry Pi to control the DC geared motors, allowing the robot to move forward, reverse, or turn to navigate through narrow pipelines. Additional relay modules are included to activate high-power mechanical components like the drill unit and conveyor mechanism, which are used to break down and collect debris once a blockage is detected.

The entire system is powered by a rechargeable battery pack with voltage regulation circuits, ensuring stable power supply to both control and mechanical units. The Flask-based web server running on the Raspberry Pi enables IoT connectivity, transmitting live video, sensor data, and

alerts to a remote dashboard or mobile device. This interface allows operators or municipal personnel to monitor the robot's activity in real-time without being physically present in hazardous areas. The integration of artificial intelligence, robotic motion, and IoT communication within the block diagram represents a fully autonomous system capable of inspecting, analyzing, and cleaning drainage pipelines. This architecture not only ensures operational efficiency but also promotes safety, making it a highly effective solution for smart urban infrastructure maintenance.

2.2.2 Hardware Components:

1. Raspberry Pi – Main control unit for processing, AI, and communication
2. Camera Module (CSI/USB) – Live video capture and blockage detection
3. DC Gear Motors – Movement and navigation inside drainage pipelines
4. Motor Driver (L298N / L293D) – Controls motor direction and speed
5. Relay Module – Controls high-power cleaning tools (drill/conveyor)
6. Mechanical Drill / Conveyor Mechanism – Blockage breaking and debris removal
7. MQ Gas Sensor (MQ-6/MQ-4) – Detects toxic gases in drainage
8. DHT11 Sensor – Monitors temperature and humidity
9. Rechargeable Battery Pack – Power supply for autonomous operation
10. Chassis and Wheels/Tracks – Physical structure and mobility support

2.2.3 Software & Tools

1. Raspberry Pi OS – Operating system for robot control
2. Python Programming – Core logic, control system, AI processing
3. OpenCV / YOLOv8 – Computer vision and object detection
4. Flask Framework – Web dashboard, live video, and alerts
5. GPIO Libraries – Motor, sensor, and relay control
6. IoT Dashboard / Web Interface – Remote monitoring and control

Component 1: Raspberry Pi 4 Model B (4GB)

Fig2.2.1:Raspberry Pi 4 Model B

The Raspberry Pi 4 Model B (4GB) is a single-board computer (SBC) designed to provide high performance in a compact form factor, making it ideal for embedded systems, robotics, IoT applications, and AI-enabled projects. In the context of the AI-Enabled IoT Autonomous Drainage Inspection and Blockage Removal Robot, the Raspberry Pi serves as the central processing unit, responsible for coordinating all hardware components, processing sensor inputs, running artificial intelligence algorithms, and managing real-time communication with remote monitoring systems. Unlike conventional 8-bit or 16-bit microcontrollers, the Raspberry Pi offers a full Linux-based operating system environment, which allows developers to integrate complex applications such as computer vision, machine learning, and IoT dashboards on a single device.

The Raspberry Pi 4B features a quad-core ARM Cortex-A72 CPU running at 1.5 GHz, providing sufficient computational power to perform AI inference tasks such as debris detection and environmental analysis without relying on cloud-based servers. This edge processing capability is particularly valuable in drainage pipeline environments where internet connectivity may be intermittent or absent. The 4GB LPDDR4 RAM enables the simultaneous execution of multiple tasks, including video capture, image processing, sensor data analysis, motor control, and web server hosting. By utilizing Python-based libraries like OpenCV and YOLOv8, the Raspberry Pi can process real-time video streams from the camera module to detect blockages, sludge accumulation, or solid waste while dynamically controlling the robot's mechanical cleaning system.

Specifications :

1. CPU: Quad-core ARM Cortex-A72, 1.5 GHz
2. RAM: 4GB LPDDR4
3. Networking: Gigabit Ethernet, Dual-band Wi-Fi, Bluetooth 5.0
4. USB Ports: 2 × USB 3.0, 2 × USB 2.0
5. Video Output: 2 × Micro HDMI (up to 4K)
6. GPIO Pins: 40-pin header for motor, sensor, and relay interface
7. Storage: MicroSD card slot (OS and data storage)
8. Power Input: 5V, 3A via USB-C
9. OS Support: Raspberry Pi OS (Linux), supports Python, C++, AI libraries
10. AI Compatibility: TensorFlow Lite, PyTorch Lite, OpenCV, YOLOv8

Applications

1. Edge AI processing for computer vision tasks in robotics
2. Autonomous robotic platforms for inspection and maintenance
3. IoT-based real-time monitoring systems
4. Industrial automation and pipeline inspection
5. AI-enabled environmental sensing and safety alerts
6. Educational and research projects in AI, robotics, and IoT

Other Options Instead

1. NVIDIA Jetson Nano / Xavier NX – Higher AI computing performance for heavy deep learning models
2. BeagleBone Black – Robust SBC for industrial automation with extensive GPIO
3. Arduino + ESP32 combination – Lightweight microcontroller solution with IoT support (requires external AI module for vision)
4. Odroid XU4 – High-performance SBC with Linux support for embedded AI applications

Component 2: Camera Module (CSI/USB)

Fig2.2.2:Camera Module

The camera module is one of the most critical components of the AI-Enabled IoT Autonomous Drainage Inspection and Blockage Removal Robot, serving as the primary sensory device for visual perception and real-time environmental monitoring. Its main purpose is to capture live video streams of the interior of drainage pipelines, enabling the robot to identify blockages, debris accumulation, sludge deposits, and other anomalies within confined underground

environments. This visual input is essential for the autonomous system because it allows AI-based computer vision algorithms, such as YOLOv8 or OpenCV-based models, to analyze images frame by frame, detect and classify obstacles, and make intelligent decisions about when and how to engage the mechanical cleaning system.

For drainage inspection, the Camera Serial Interface (CSI) module is often preferred due to its high bandwidth, low latency, and seamless integration with the Raspberry Pi. The CSI interface allows direct connection of the camera to the Pi's dedicated camera port, enabling high-speed video capture with minimal processing overhead. This is particularly important for autonomous operations in pipelines, where real-time detection of debris is critical. Using a CSI camera, the robot can capture high-definition video (up to 1080p or 4K depending on the model), ensuring that even small blockages or fine particulate matter are accurately detected.

In addition to visual inspection, the camera module plays a key role in AI-driven autonomous navigation. By continuously analyzing the live feed, the robot can detect pipeline walls, obstacles, turns, and junctions, allowing the motion control algorithms to adjust motor speed, direction, and positioning.

Specifications

- Resolution: 1080p (Full HD) / 4K (optional)
- Interface: CSI (Raspberry Pi dedicated port) / USB 3.0
- Frame Rate: 30–60 FPS (depending on model)
- Field of View: 70°–120° (wide-angle lens options available)
- Low-Light Support: IR or low lux sensitivity
- Power Requirement: 5V DC via CSI port or USB
- Housing: IP65–IP67 waterproof and dustproof options
- Compatibility: Raspberry Pi OS, Python, OpenCV, YOLOv8

Applications

- Real-time visual inspection of drainage pipelines
- AI-based blockage detection and classification
- Autonomous navigation and obstacle avoidance
- IoT-based live video streaming to remote dashboards
- Industrial and environmental monitoring
- Data collection for predictive maintenance

Other Options Instead

- Raspberry Pi HQ Camera – High-quality interchangeable lens for better clarity
- USB Webcams – Easy integration, multiple angle coverage
- Arducam Mini Module – Compact, low-power option for narrow pipelines
- Intel RealSense Camera – Depth sensing for 3D obstacle detection
- FLIR Thermal Camera – Optional for detecting temperature anomalies or hot spots

Component 3: DC Gear Motors

Fig2.2.3: DC Gear Motor

The DC Gear Motor is a crucial mechanical component in the AI-Enabled IoT Autonomous Drainage Inspection and Blockage Removal Robot, serving as the primary actuator responsible for locomotion and navigation inside drainage pipelines. These motors are direct current (DC) powered, combined with a gear reduction mechanism, which provides the necessary torque and speed control required to maneuver the robot through confined and often uneven pipeline surfaces. In the context of this project, the DC gear motor enables the robot to move forward, backward, turn, and maintain stability while performing inspection and blockage removal operations, even in tight or inclined pipelines.

A DC gear motor essentially combines a standard DC motor with a gearbox that reduces the speed of rotation while increasing the torque. This is particularly important for robotics applications where precise movement and high torque are needed to navigate resistance caused by sludge, water flow, or friction from pipe surfaces. The gear reduction allows the robot to move slowly and steadily, which is critical for maintaining stability while the camera captures live video for AI-based debris detection. At the same time, it provides sufficient force to drive

mechanical cleaning tools such as drills or conveyor belts connected to the robot for blockage removal.

Specifications

- Voltage: 6V – 12V DC
- Rated RPM: 50–200 RPM (depending on gear ratio)
- Gear Ratio: 1:20 – 1:50 (torque amplification)
- Torque: 2–10 kg·cm (depending on model)
- Current Rating: 200–800 mA (no load), up to 2–3A (under load)
- Shaft Diameter: 3–6 mm
- Mounting: Standard flanged or bracket mounts
- Control: PWM via motor driver
- Lifespan: 2000–5000 hours continuous operation

Applications

- Mobile robotic locomotion in confined environments
- Pipeline inspection and maintenance robots
- Conveyor systems for debris or materials
- Autonomous or semi-autonomous industrial robots
- Educational robotics projects
- AI-assisted navigation systems

Other Options Instead

- Stepper Motors with Gearbox – For precise positional control in pipeline navigation
- Brushless DC (BLDC) Motors – Higher efficiency, longer life, lower maintenance
- Servo Motors with High Torque – For controlled movements in small-scale robots
- Micro DC Gear Motors – Compact alternative for narrower pipelines
- NEMA Gear Motors – For heavy-duty industrial robotic applications

Component 4: Motor Driver (L298N / L293D)

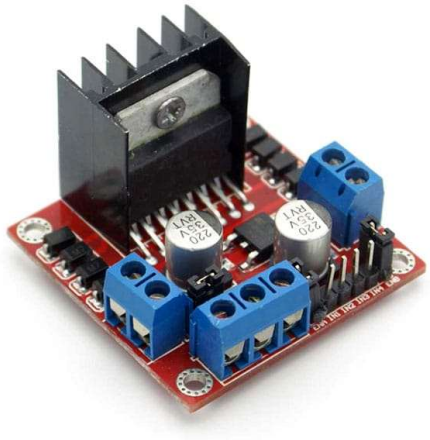

Fig2.2.4: Motor Driver

The Motor Driver Module, specifically the L298N or L293D, is an essential component in the AI-Enabled IoT Autonomous Drainage Inspection and Blockage Removal Robot. Its primary role is to serve as an interface between the low-power control signals from the Raspberry Pi and the high-power DC gear motors, enabling safe and precise control of robot locomotion. Directly connecting DC motors to the Raspberry Pi is impractical because the Pi's GPIO pins can only supply small currents (a few milliamps), which are insufficient to drive motors that require hundreds of milliamps to several amperes under load. The motor driver module addresses this by acting as a bridge, amplifying control signals and safely delivering the required current and voltage to the motors.

The L298N is a dual H-bridge motor driver capable of controlling two DC motors independently, allowing bidirectional motion. It uses an H-bridge circuit to switch the polarity of the voltage applied to the motor terminals, enabling forward and backward rotation. This bidirectional control is critical for the drainage robot, which must navigate complex pipeline networks, reverse to avoid obstacles, or rotate to align with branch junctions.

Specifications

- Model Options: L298N / L293D
- Number of Channels: 2 DC motors per module
- Max Operating Voltage: 36V (L298N), 36V (L293D)

- Current Capacity: 2A per channel (L298N), 600mA per channel (L293D)
- Control Input: Logic level signals from Raspberry Pi GPIO
- PWM Support: Yes, for speed control
- Protection: Built-in flyback diodes for back EMF protection
- Mounting: Standard PCB with screw terminals or pin headers

Applications

- Bidirectional control of DC motors in robotics
- PWM-based speed modulation for autonomous robots
- Differential drive systems for pipeline navigation
- Industrial automation with small to medium motors
- Educational robotics and embedded system projects
- Safe motor interfacing for microcontroller-based systems

Other Options Instead

- TB6612FNG Motor Driver – Compact, high-efficiency dual H-bridge driver
- DRV8833 – Low-voltage, low-current dual motor driver for small robots
- VNH2SP30 – High-current H-bridge for heavy-duty industrial robots
- Pololu Dual Motor Driver – Microcontroller-compatible with PWM and direction control
- Custom MOSFET H-Bridge Circuits – For high-power or specialized motor control applications

Component 5: Relay Module

Fig2.2.5:Relay Module

Description:

The Relay Module is a critical electromechanical component in the AI-Enabled IoT Autonomous Drainage Inspection and Blockage Removal Robot. Its primary function is to control high-power or high-voltage devices using low-power control signals from the Raspberry Pi, providing safe and efficient operation of mechanical actuators such as the drill unit, conveyor belt, and other heavy-duty components. The Raspberry Pi's GPIO pins are designed to handle very low current (in the range of milliamps), which is insufficient for directly powering actuators that require several amperes. The relay module acts as an electrical switch, isolating the high-power circuits from the logic-level control signals, thus preventing damage to the microcontroller while enabling precise actuation of connected devices.

Specifications

- Operating Voltage (Control Side): 5V DC
- Load Voltage (Switching Side): 250V AC / 30V DC (depending on model)
- Current Capacity: 10A per channel (typical)
- Channels: Single or multi-channel (1–8)
- Isolation: Opto-isolated control circuit for Raspberry Pi protection
- Switching Type: Normally open (NO) and/or normally closed (NC)
- Trigger: High-level or low-level logic from microcontroller
- Mounting: PCB with screw terminals or pin headers

Applications

- Switching high-current motors, drills, or conveyor belts in robotics
- Automated control of actuators in IoT systems
- Industrial automation for machinery operation
- Home automation (lights, fans, pumps)
- Safety interlocks and emergency shutdown systems
- Educational and research projects involving microcontrollers

Other Options Instead

- Solid-State Relay (SSR) – Faster switching, silent operation, longer life span
- Electromechanical Relays (EMR) with PCB mounting – Cost-effective, standard solution
- MOSFET-based Relay Circuits – High-speed switching for DC loads
- Triac-based AC Relays – For controlling AC-powered actuators
- Optocoupler-isolated modules – Enhanced protection for sensitive microcontrollers

Software 1: Raspberry Pi OS + Python

Raspberry Pi OS (formerly Raspbian) is a Debian-based Linux operating system optimized for the Raspberry Pi single-board computer. In the AI-Enabled IoT Autonomous Drainage Inspection and Blockage Removal Robot, Raspberry Pi OS provides a stable, versatile, and lightweight environment for integrating multiple functionalities such as robotic control, AI inference, sensor monitoring, and web server hosting. It supports all the hardware interfaces of the Pi, including GPIO pins, CSI camera input, USB peripherals, I2C, SPI, and UART, which are essential for interfacing with DC gear motors, motor drivers, camera modules, relay modules, and environmental sensors like DHT11 and MQ-6.

The Python programming language is used as the primary software platform for controlling the robot. Python is highly compatible with Raspberry Pi OS and offers extensive libraries for robotics, IoT, and AI applications. Libraries such as Rpi.GPIO, gpiozero, OpenCV, YOLOv8, Flask, and paho-mqtt provide ready-to-use modules for motor control, sensor integration, computer vision, web interface creation, and real-time IoT communication. Python's simplicity and versatility allow developers to implement complex algorithms, including AI-based debris detection, environmental monitoring, and automated control of mechanical actuators.

The combination of Raspberry Pi OS and Python enables real-time operation of the drainage inspection robot. The OS manages multitasking, ensuring that camera feeds, sensor readings, motor control, and web server functionalities run concurrently without performance degradation. Python scripts can continuously capture video frames, process them using AI models, and generate commands to drive motors or activate relays, all while logging data to the local storage or transmitting it over IoT protocols. This integrated approach simplifies software architecture and allows for a single-board solution without requiring additional microcontrollers for individual tasks.

The AI component of the robot heavily relies on Python-based frameworks. For instance, OpenCV is used to preprocess camera images, detect edges, and identify objects or blockages within the pipeline. YOLOv8, a state-of-the-art deep learning object detection model, can run efficiently on the Raspberry Pi with lightweight optimizations, enabling real-time debris detection. Python's TensorFlow or PyTorch libraries allow for model loading, inference, and even retraining on new datasets, making the system adaptable to different types of waste and pipeline conditions.

Specifications

- Operating System: Raspberry Pi OS (32-bit / 64-bit versions)

- Programming Language: Python 3.x
- Supported Libraries: OpenCV, YOLOv8, TensorFlow Lite, Rpi.GPIO, gpiozero, Flask, paho-mqtt
- Hardware Interfaces: GPIO, I2C, SPI, UART, CSI camera, USB
- Storage Support: MicroSD card, external USB storage
- Network Support: Ethernet, Wi-Fi
- Multitasking: Supports concurrent execution of AI, motor control, and web server tasks

Applications

- Autonomous robotic control for navigation and cleaning
- Real-time image and video processing for object detection
- Environmental monitoring with sensor data integration
- Web-based live streaming and dashboard monitoring
- IoT communication and cloud data logging
- Educational and research projects involving AI and robotics

Other Options Instead

- Ubuntu / Ubuntu Mate – Full Linux distribution for Pi with advanced package support
- Windows IoT Core – For Windows-based control and .NET integration
- ROS (Robot Operating System) – Advanced robotics framework for complex motion planning
- Node-RED + Python – Low-code IoT and sensor integration for rapid prototyping
- MicroPython – Lightweight Python variant for microcontroller-based applications

Software 2: OpenCV / YOLOv8

OpenCV (Open Source Computer Vision Library) and YOLOv8 (You Only Look Once, version 8) form the core computer vision and AI-based object detection software stack of the AI-Enabled IoT Autonomous Drainage Inspection and Blockage Removal Robot. These software frameworks are responsible for processing the live video feed captured by the camera module, analyzing pipeline conditions, detecting debris or blockages, and providing actionable insights to the robot's control system. Together, they enable real-time, intelligent decision-making, allowing the robot to navigate, identify obstructions, and execute cleaning operations autonomously.

The combination of OpenCV and YOLOv8 enables real-time debris detection inside drainage pipelines. The camera captures frames, OpenCV performs preprocessing, and YOLOv8

analyzes each frame to detect and classify objects. This information is sent to the Raspberry Pi control program, which decides how to actuate the motors, relay-controlled drills, or conveyor belts to remove the blockage. The entire process runs continuously, ensuring that the robot can autonomously identify and react to hazards without human intervention.

OpenCV also provides tools for robot navigation and alignment. Using techniques like contour detection, Hough line transformation, or perspective mapping, the robot can determine the central axis of the pipeline, identify curves, and detect junctions or forks. By integrating this geometric analysis with YOLOv8 outputs, the robot can not only detect blockages but also position itself optimally for cleaning operations. For instance, if a solid debris cluster is detected near a pipeline corner, the robot can adjust its orientation to align the drill or conveyor at the correct angle, maximizing efficiency.

YOLOv8's lightweight architecture ensures that detection is fast enough for real-time operation, even on limited hardware like Raspberry Pi. Its model can be optimized using TensorRT, ONNX, or PyTorch Lite, reducing latency and power consumption.

Specifications

- Software Libraries: OpenCV (4.x), YOLOv8
- Supported Platforms: Raspberry Pi OS, Windows, Linux
- Programming Language: Python 3.x
- Camera Input: CSI, USB, or IP camera
- Detection Capability: Real-time object detection with bounding boxes
- Preprocessing Tools: Image filtering, edge detection, contour analysis
- Model Optimization: TensorRT, ONNX, PyTorch Lite for edge deployment
- Frame Rate: Up to 15–30 FPS depending on Pi hardware and model size

Applications

- Real-time debris and blockage detection in pipelines
- Autonomous navigation in robotics using computer vision
- Object detection for industrial inspection systems
- Waste management and smart city monitoring
- AI-based anomaly detection for safety and preventive maintenance
- Educational and research projects in computer vision and deep learning

Other Options Instead

- TensorFlow Lite + OpenCV – Lightweight object detection on edge devices
- PyTorch + MobileNet SSD – Efficient detection for low-power hardware

- Darknet YOLOv4/v5 – Older but widely used YOLO versions for embedded AI
- MediaPipe – Lightweight vision pipeline for real-time object tracking
- Edge Impulse – Low-code AI model deployment for edge devices

Software 3: Flask Web Framework

Flask is a lightweight, open-source web framework written in Python, designed for building web applications quickly and efficiently. In the AI-Enabled IoT Autonomous Drainage Inspection and Blockage Removal Robot, Flask serves as the central platform for real-time monitoring, visualization, and user interaction. While the robot operates autonomously, the data it generates—including live video feeds, environmental sensor readings, and AI-detected blockage alerts—needs to be accessible to users, maintenance personnel, and municipal authorities. Flask provides a robust yet flexible solution for delivering this data through a web-based dashboard, accessible on any device with a web browser, such as a laptop, tablet, or smartphone.

Flask's simplicity and modularity make it ideal for the Raspberry Pi platform, where computing resources are limited. The framework allows developers to create dynamic web pages with minimal code while supporting RESTful APIs, enabling seamless integration with IoT devices and other software components. In the context of the drainage inspection robot, Flask acts as the communication bridge between the robot's internal control system and external users.

Specifications

- Framework Type: Python-based lightweight web framework
- Supported OS: Raspberry Pi OS, Linux, Windows, macOS
- Programming Language: Python 3.x
- Web Protocols: HTTP/HTTPS, REST API support
- Templating Engine: Jinja2
- Database Support: SQLite, MongoDB, MySQL
- Concurrency: Multi-threading and multiple client support
- Integration: Compatible with OpenCV, YOLOv8, MQTT, and other Python libraries

Applications

- Real-time video streaming for autonomous robotics
- Live monitoring of sensor data (temperature, humidity, gas)

- Alert management and threshold-based notifications
- Remote control and operation of robotic systems
- IoT dashboards and data visualization
- Data logging and historical analytics for predictive maintenance

Other Options Instead

- Django – Full-featured Python web framework for complex applications
- Node.js + Express.js – JavaScript-based lightweight web server for IoT
- FastAPI – Modern Python framework with high performance and async support
- ThingSpeak – Cloud-based IoT visualization and monitoring platform
- Blynk – Mobile-friendly IoT control and monitoring platform

CHAPTER 3

3.1 Flowchart

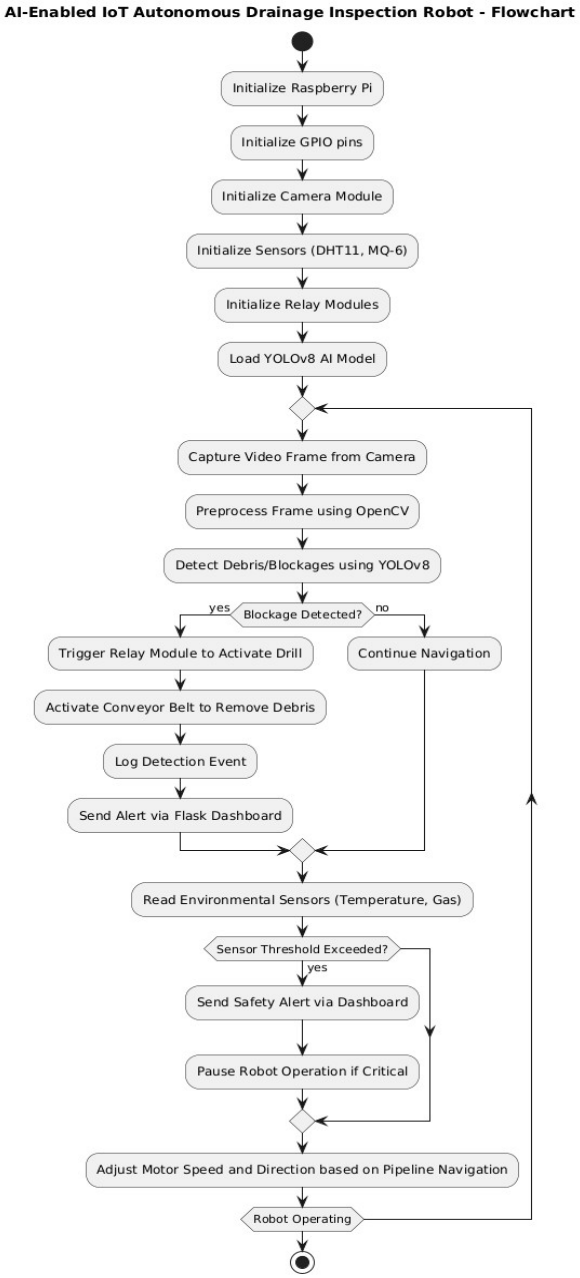

3.2 Flowchart Pointwise Explanation

1. System Initialization
    - Raspberry Pi boots up and initializes all hardware components.
    - GPIO pins are configured to control motors, relays, and sensors.
    - Camera module is initialized for live video feed.

- Environmental sensors (DHT11 for temperature/humidity, MQ-6 for gas) are initialized.
- YOLOv8 AI model is loaded into memory for debris/blockage detection.

2. Continuous Operation Loop
    - The robot enters a continuous loop to perform autonomous inspection.
3. Video Capture
    - Camera captures real-time video frames of the drainage pipeline.
4. Frame Preprocessing
    - OpenCV processes each frame to improve image quality.
    - Techniques like noise reduction, edge detection, and color segmentation are applied.
5. Debris / Blockage Detection Using YOLOv8
    - AI model analyzes preprocessed frames.
    - Detects debris, sludge, or blockages and generates bounding boxes with confidence scores.
6. Decision: Blockage Detected?
    - If a blockage is detected:
    - Relay module activates the mechanical drill to break the debris.
    - Conveyor belt is started to lift and remove debris.
    - Event is logged for future reference.
    - Real-time alert is sent via Flask web dashboard.
    - If no blockage is detected:
    - Robot continues to navigate forward in the pipeline.
7. Environmental Sensor Monitoring
    - DHT11 measures temperature and humidity.
    - MQ-6 detects hazardous gases like methane, CO, or H2S.
    - Sensor data is compared against predefined thresholds.
8. Decision: Sensor Threshold Exceeded?
    - If yes:
    - Flask dashboard sends a safety alert to operators.
    - Robot may pause operation if conditions are critical to ensure safety.
    - If no:

- Robot continues inspection and cleaning operations.
- Motor Control & Navigation
- Motors adjust speed and direction for proper pipeline alignment.
- Robot navigates turns, bends, and junctions autonomously using visual and sensor inputs.

9. Loop Continuation
    - Steps 3–9 are repeated continuously until the robot completes the entire inspection route.
10. End of Operation
    - Once the inspection and blockage removal task is completed, the robot stops.
    - All data is stored in logs and can be analyzed for reporting or predictive maintenance.

CHAPTER 4

4.1 Methodology

1. System Design and Planning
    - Define project objectives: autonomous drainage inspection, blockage detection, debris removal, and real-time monitoring.
    - Decide hardware components: Raspberry Pi, camera module, DC gear motors, motor driver, relay modules, mechanical drill and conveyor, DHT11, MQ-6, battery pack, and chassis.
    - Decide software stack: Raspberry Pi OS, Python, OpenCV, YOLOv8, Flask, GPIO/motor-control libraries.
    - Prepare block diagram and flowchart to visualize data flow, AI processing, and control logic.
2. Hardware Assembly
    - Assemble the robot chassis and ensure stability for operation inside pipelines.
    - Mount DC gear motors and connect to motor driver for motion control.
    - Install mechanical drill and conveyor for debris removal.
    - Connect relay modules for controlling high-power actuators.
    - Mount the camera module and environmental sensors (DHT11, MQ-6) in optimal positions.
    - Connect rechargeable battery pack and ensure proper power regulation.
3. Software Setup
    - Install Raspberry Pi OS on the microSD card and configure Wi-Fi and network settings.
    - Install Python 3.x and required libraries: OpenCV, YOLOv8, Flask, RPi.GPIO, gpiozero, and sensor libraries.
    - Prepare the development environment for real-time AI processing and web dashboard integration.
4. Camera and Image Processing
    - Capture live video feed from the camera module.
    - Preprocess frames using OpenCV for noise reduction, edge detection, and contrast enhancement.

- Identify regions of interest for AI-based object detection.

5. AI-Based Debris Detection
    - Load the pre-trained YOLOv8 model into the Raspberry Pi.
    - Perform real-time object detection on preprocessed frames to detect blockages and debris.
    - Generate bounding boxes and confidence scores for detected objects.
6. Environmental Monitoring
    - Continuously read data from DHT11 (temperature & humidity) and MQ-6 (hazardous gas).
    - Compare readings against safety thresholds.
    - Send real-time alerts via Flask dashboard if thresholds are exceeded.
7. Decision Making and Actuation
    - If blockage is detected: activate drill and conveyor using relay modules.
    - If no blockage, continue autonomous navigation inside pipeline.
    - Adjust DC motor speed and direction for proper alignment using sensor and vision feedback.
8. Web Dashboard and Monitoring
    - Use Flask to create a live dashboard accessible remotely.
    - Stream live video feed with AI annotations for detected debris.
    - Display real-time sensor readings and alerts.
    - Enable control options such as start, stop, or pause operation remotely.
9. Data Logging and Analysis
    - Record video frames, sensor readings, AI detection logs, and motor operation data.
    - Store data locally on Raspberry Pi or transmit to cloud/database for future analysis.
    - Use historical data to improve predictive maintenance and optimize inspection schedules.
10. Testing and Calibration
    - Perform multiple test runs in controlled pipelines to ensure smooth operation.
    - Calibrate AI detection model with real debris types for higher accuracy.
    - Adjust sensor thresholds, motor speeds, and drill/conveyor operation as per pipeline conditions.

11. Safety and Error Handling

- Implement emergency stop if sensors detect critical conditions.
- Handle AI detection errors gracefully to prevent false activation of actuators.
- Ensure relay modules safely isolate high-power loads from control circuitry.

12. Deployment

- Deploy the robot in real drainage pipelines for autonomous inspection and cleaning.
- Monitor real-time performance via Flask dashboard.
- Collect operational data for reporting, maintenance, and optimization.

13. Maintenance and Upgradation

- Regularly update AI models for new debris types or pipeline scenarios.
- Maintain hardware components for mechanical wear and tear.
- Update Flask dashboard and Python scripts for improved functionality and usability.

4.2 Safety Considerations

1. Ensure proper insulation and isolation of all electrical components to prevent short circuits.
2. Use relay modules to safely control high-power actuators (drill, conveyor) without exposing control circuits.
3. Continuously monitor hazardous gases (MQ-6 sensor) to avoid exposure to toxic conditions.
4. Use temperature and humidity sensors (DHT11) to detect overheating or unsafe environmental conditions.
5. Implement emergency stop mechanisms for immediate shutdown in case of critical failure.
6. Securely mount all mechanical parts to prevent detachment inside pipelines.
7. Ensure battery pack and power supply are properly regulated to prevent overvoltage or overheating.
8. Avoid manual intervention during robot operation to reduce human risk in confined spaces.
9. Regularly calibrate sensors and AI detection to avoid false alarms or missed hazards.
10. Design the robot chassis to withstand wet and slippery conditions inside drains.

CHAPTER 5

5.1 LIMITATIONS

1. Limited battery life restricts continuous operation inside long pipelines.
2. Raspberry Pi's processing power may limit frame rate for real-time AI detection in very complex scenarios.
3. YOLOv8 model may require retraining for diverse debris types not included in the initial dataset.
4. Physical size of the robot may restrict movement in very narrow or heavily bent pipes.
5. Environmental factors such as water flow, sludge thickness, and low lighting may affect sensor accuracy and camera visibility.
6. Real-time alerts depend on stable network connectivity; poor Wi-Fi may delay notifications.
7. Mechanical drill and conveyor may face wear and tear due to abrasive materials in drains.
8. Maintenance requires specialized personnel due to integrated AI, sensors, and mechanical actuators.
9. Limited memory and storage on Raspberry Pi may require external storage for prolonged logging.
10. High initial cost compared to manual inspection tools or simpler camera-based solutions.

5.2 ADVANTAGES

1. Autonomous operation reduces human risk in hazardous and confined drainage pipelines.
2. Real-time debris detection and removal improve efficiency over manual methods.
3. AI-based object detection ensures accurate and timely identification of blockages.
4. Environmental sensors enhance safety monitoring by detecting toxic gases and temperature changes.
5. Web-based dashboard allows remote monitoring and control, increasing operational convenience.
6. Continuous data logging enables predictive maintenance and long-term planning for urban drainage systems.
7. Scalable system can be deployed in multiple pipelines across cities.

8. Reduces urban flooding and hygiene issues caused by blocked drains.
9. Lightweight software stack (Flask, OpenCV, YOLOv8) ensures efficient edge computing.
10. Modular design allows easy upgrades for sensors, AI models, or mechanical parts.

5.3 DISADVANTAGES

1. Dependent on stable power supply; battery depletion may halt operations.
2. Limited AI accuracy in complex or dynamic debris scenarios.
3. Network dependence for real-time alerts can be affected by connectivity issues.
4. Mechanical parts like drills and conveyor may require frequent maintenance.
5. Initial setup and integration require technical expertise, increasing deployment time.
6. Operation may be impacted by harsh environmental conditions like water currents or high sludge concentration.
7. Raspberry Pi may overheat under continuous heavy processing of video and AI tasks.
8. System cost is higher than simple manual inspection or CCTV-based solutions.

5.4 APPLICATIONS

1. Autonomous drainage inspection and blockage removal in urban sewage systems.
2. Real-time monitoring of industrial pipelines for maintenance and safety.
3. Waste management and debris detection in stormwater channels.
4. Hazardous environment monitoring where human entry is risky.
5. Smart city applications for flood prevention and hygiene management.
6. Educational and research applications in robotics, IoT, and AI-based automation.
7. Temporary deployment during heavy rains to prevent urban flooding.
8. Monitoring pipelines in chemical or industrial plants where gas detection is critical.

5.5 FUTURE SCOPE

1. Integrate advanced AI models for improved detection of diverse debris types.
2. Enhance navigation with SLAM (Simultaneous Localization and Mapping) for better pipeline mapping.
3. Implement long-range wireless communication for remote control in large pipeline networks.

4. Use solar-powered or higher capacity battery systems for extended autonomous operation.
5. Add multi-sensor fusion (e.g., LIDAR, ultrasonic sensors) for better obstacle avoidance.
6. Deploy cloud-based analytics for predictive maintenance and city-wide drainage management.
7. Integrate automated self-cleaning and maintenance scheduling.
8. Scale the system to multi-robot coordination for large-scale pipeline networks.
9. Integrate with municipal IoT systems for real-time city infrastructure monitoring.
10. Use AI-driven maintenance recommendations to optimize repair and cleaning schedules.

CHAPTER 6

6.1 Conclusion

The AI-Enabled IoT Autonomous Drainage Inspection and Blockage Removal Robot successfully integrates robotics, artificial intelligence, and IoT to provide a smart, autonomous solution for urban drainage maintenance. By combining AI-based debris detection, real-time environmental monitoring, and mechanical blockage removal, the system minimizes human risk and ensures efficient, safe, and timely pipeline inspection. The Flask-based web dashboard allows remote monitoring, live video streaming, and alert notifications, enabling operators to supervise operations without entering hazardous environments. While limitations such as battery life, narrow pipeline navigation, and environmental challenges exist, the modular and scalable design ensures adaptability and future upgradation. Overall, this project demonstrates a practical, innovative, and technology-driven approach to addressing urban drainage management challenges, paving the way for smarter cities and safer urban infrastructure.

CHAPTER 7

7.1 References

1. R. Al-Ali, M. A. Zualkernan, and F. Aloul, "A mobile GPRS-sensors array for air pollution monitoring," *IEEE Sensors Journal*, vol. 10, no. 10, pp. 1666–1671, Oct. 2010. https://doi.org/10.1109/JSEN.2010.2046581
2. M. M. Rathore, A. Paul, A. Ahmad, B. W. Chen, and W. Ji, "Real-time big data analytical architecture for remote sensing application," *IEEE Journal of Selected Topics in Applied Earth Observations and Remote Sensing*, vol. 9, no. 9, pp. 3720–3731, Sept. 2016.
3. K. P. Sandeep and S. H. S. Jyothi, "Design and implementation of gas leakage monitoring and alert system using Raspberry Pi," in *2018 2nd International Conference on Inventive Systems and Control (ICISC)*, 2018, pp. 362–366. https://doi.org/10.1109/ICISC.2018.8399113
4. R. Sharma and R. Patel, "Smart drainage monitoring and cleaning system using IoT," in *2020 International Conference on Communication and Signal Processing (ICCSP)*, Chennai, India, 2020, pp. 0569–0572. https://doi.org/10.1109/ICCSP48568.2020.9182363
5. D. Mishra, V. Mishra, and M. Sharma, "An intelligent waste management system for smart cities using Internet of Things," in *2020 IEEE International Conference on Computing, Power and Communication Technologies (GUCON)*, 2020, pp. 276–281. https://doi.org/10.1109/GUCON48875.2020.9231128
6. Y. Song, S. Liu, H. Li, and Y. Wang, "Object detection with deep learning: A review," *IEEE Transactions on Neural Networks and Learning Systems*, 2021. https://doi.org/10.1109/TNNLS.2021.3055116
7. G. M. Tarek, S. S. Mehedi, M. M. Rana, and M. M. Hasan, "Design and implementation of a real-time IoT-based monitoring system for water quality," in *2021 IEEE International Conference on Telecommunications and Photonics (ICTP)*, 2021. https://doi.org/10.1109/ICTP53492.2021.9657033
8. S. Dey, R. Debbarma, and S. S. Mandal, "Smart real-time drainage system using Arduino and IoT," in *2020 4th International Conference on Computing Methodologies and Communication (ICCMC)*, 2020, pp. 635–639. https://doi.org/10.1109/ICCMC48092.2020.ICCMC-000116

9. S. H. Shinde and N. A. Bhagat, "Image processing and IoT based drainage blockage detection system," in *2021 International Conference on Emerging Smart Computing and Informatics (ESCI)*, 2021, pp. 346–351.
10. P. Das, "IoT-Based Automatic Drainage Cleaning Robot," *ResearchGate*, 2023. https://www.researchgate.net/publication/392564282_IoT_Based_Automatic_Drainage_Cleaning_Robot
11. P. Das, "Sewage Pipe Crawling Robot," *KSCST*, 2023. https://www.kscst.org.in/spp/47_series/47s_spp/Exhibition%20Projects/276_47S_BE_3922.pdf
12. R. Muthukumar et al., "An Autonomous Sewage Cleaning Mobile Robot," *ResearchGate*, 2023. https://www.researchgate.net/publication/391711500_An_Autonomous_Sewage_Cleaning_Mobile_Robot
13. R. Muthukumar et al., "Intelligent Drainage Cleaning and Monitoring System," *IJFMR*, 2023. https://www.ijfmr.com/papers/2025/1/35626.pdf
14. B. Xiong et al., "A Visually Assisted Cleaning Robot for Sewers," *MDPI Applied Sciences*, 2023. https://www.mdpi.com/2076-3417/15/7/3426
15. M. A. Raptor et al., "Raptor: A Design of a Drain Inspection Robot," *ResearchGate*, 2023. https://www.researchgate.net/publication/354473576_Raptor_A_Design_of_a_Drain_Inspection_Robot