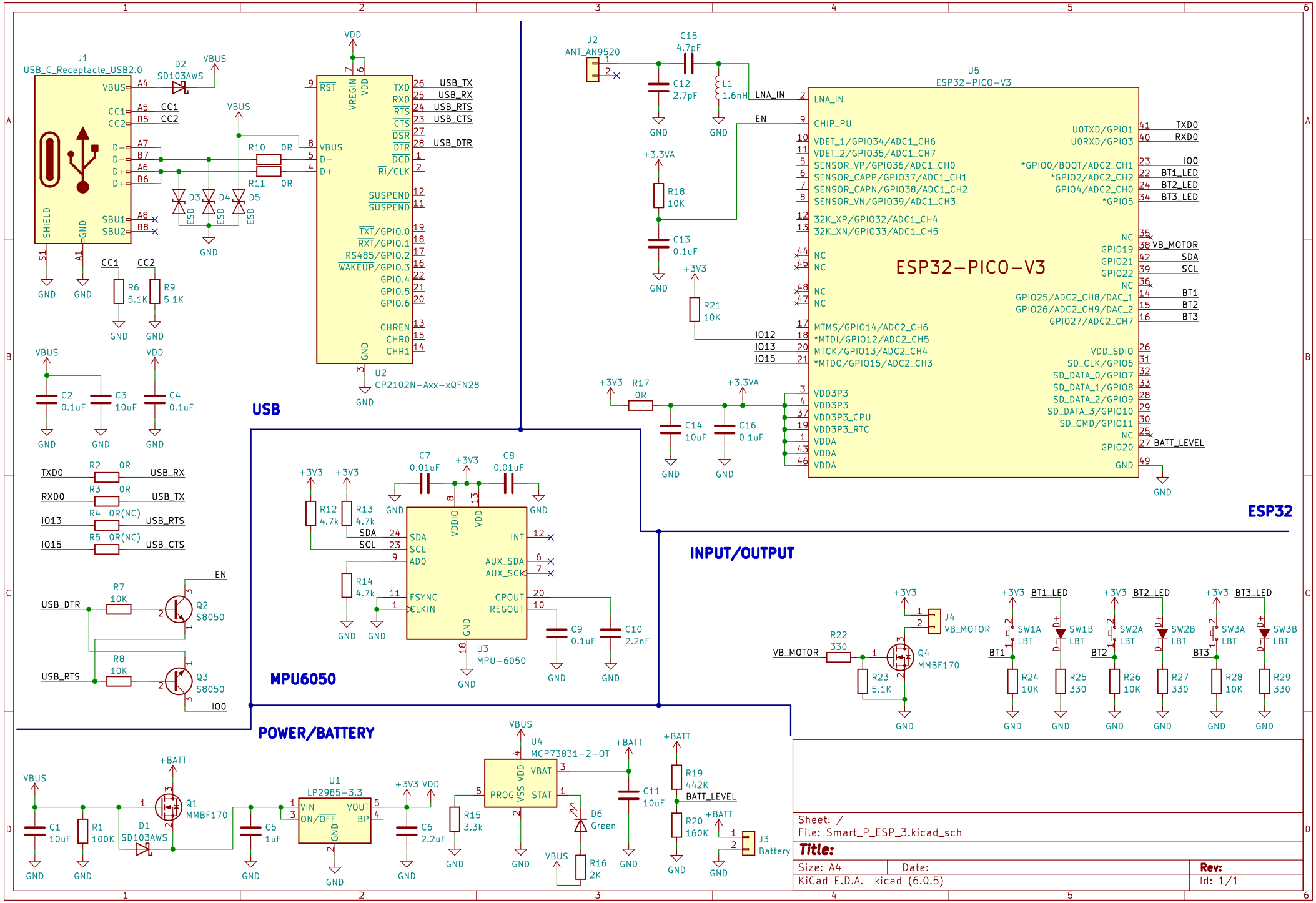
USB
ESP32
INPUT/OUTPUT
MPU6050
POWER/BATTERY
J1
USB_C_Receptacle_USB2.0
D2
SD103AWS
U2
CP2102N-Axx-xQFN28
J2
ANT_AN9520
U5
ESP32-PICO-V3
ESP32-PICO-V3
U3
MPU-6050
J4
VB_MOTOR
Q4
MMBF170
U1
LP2985-3.3
U4
MCP73831-2-OT
Q1
MMBF170
D1
SD103AWS
J3
Battery
Sheet: /
File: Smart_P_ESP_3.kicad_sch
Title:
Size: A4
Date:
Rev:
KiCad E.D.A. kicad (6.0.5)
Id: 1/1