:01
1/1/26

VERIFICATION OF KIRCHHOFF'S LAWS

AIM:

To verify Kirchhoff's voltage law and Kirchhoff's current law both theorectically and practically for a given DC circuit.

APPARATUS REQUIRED:

SL. NO	APPARATUS	SPECIFICATION	QUANTITY
1.	Regulated Power Supply (RPS)	(0-30V)	1
2.	Voltmeter	(0-30V) MC	3
3.	Ammeter	(0-10mA) MC	3
4.	Resistors	1 kΩ	3
5.	Breadboard	–	1

PROCEDURE:

* Give connections as per the circuit diagram.

* Switch ON the supply, vary the RPS (Regulated Power Supply) and set a particular input voltage.

CIRCUIT DIAGRAM:

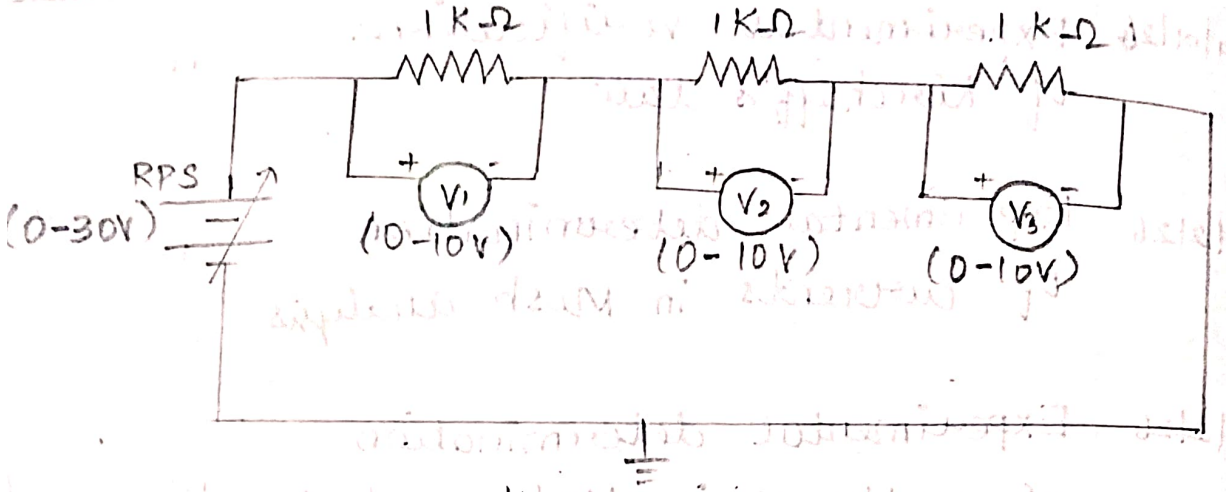

KVL

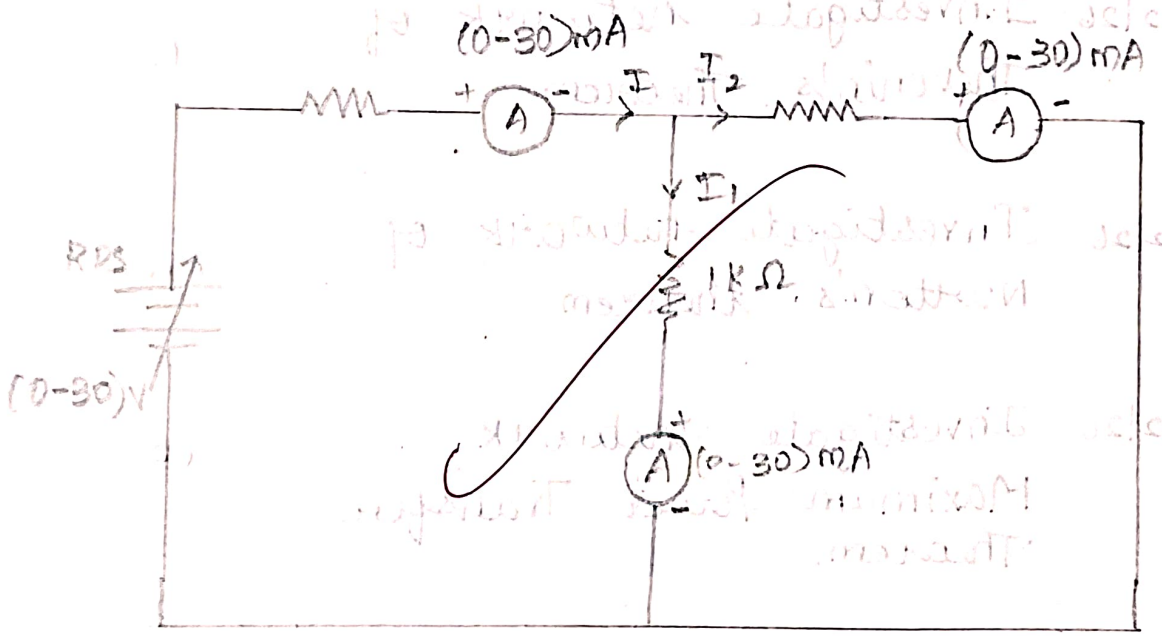

KCL

TABUCAR COLUMN :

V (volts)	V_1 (volts)	V_2 (volts)	V_3 (volts)	$V = V_1 + V_2 + V_3$ (volts)	I (amps)	I_1 (amps)	I_2 (amps)	$I = I_1 + I_2$ (amps)
2	0.71	0.72	0.71	2.1	4.3mA	2.1mA	2.1mA	4.2mA
6	2.06	2.06	2.06	6.18	12.5mA	6.2mA	6.2mA	12.4mA
9	3.0	3.0	3.0	9.0	18.7	9.3mA	9.3mA	18.6mA
12	4.0	4.0	4.0	12.0	24.1	12.2mA	12.2mA	24.4mA

o/p verified

CALCULATIONS :

For KVL circuit

(i) $V = 2V$

$I = V/R = 2/3 \times 10^3$

$I = 0.71 \times 10^{-3} A$

$V_1 = IR_1 = 0.71 \times 10^{-3} \times 1 \times 10^3$

$= 0.71 V$

similarly,

$V_2 = IR_2 = 0.72$

$V_3 = IR_3 = 0.71$

$V_1 + V_2 + V_3 = V$

$0.71 + 0.72 + 0.71 = 2$

(ii) $V = 6V$

$I = V/R = 6/3 \times 10^3 = 2 \times 10^{-3} A$

$V_1 = IR_1 = 2.06 \times 10^{-3} \times 1 \times 10^3 = 2.06$

$V_2 = IR_2 = 2.06 \times 10^{-3} \times 1 \times 10^3 = 2.06$

$V_3 = IR_3 = 2.06 \times 10^{-3} \times 1 \times 10^3 = 2.06$

iii) $V = 9V$

$I = V/R = \frac{9}{3 \times 10^2} = 3 \times 10^{-3} A$

$V_1 = IR_1 = 3 \times 10^{-3} \times 1 \times 10^3 = 3$

$V_2 = IR_2 = 3 \times 10^{-3} \times 1 \times 10^3 = 3$

$V_3 = IR_3 = 3 \times 10^{-3} \times 1 \times 10^3 = 3$

$V = IR$

$R_T = R_1 + R_2 + R_3 = 1k + 1k + 1k$

$R_2 = 3k\Omega$

Total current $I_T = I_T = V/R = 2/3$

$= 0.66 mA$

Voltage across each resistors

$V_1 = 0.66 \times 1 = 0.66$

$V = V_1 + V_2 + V_3 = 0.66 + 0.66 + 0.66$

$= 1.9V$ (Theoretical value)

Practical value $= 2V$

* Note down the readings of ammeter and voltmeters and tabulate them.

* Vary the RPS for different input voltages and note down the readings of all the meters.

* Reduce the RPS to its minimum value and switch OFF the supply.

* Using the tabulated values, verify the Kirchoff's laws practically, and verify it theorectically.

MARKS SPLIT - UP :

Sl. No	DESCRIPTION	MARKS ALLOTTED	MARKS OBTAINED
1.	Experimental setup/ connections	20 marks	20
2.	Observation / Readings	20 marks	20
3.	Calculations / Results	20 marks	20
4.	Viva	20 marks	20
5.	Record	20 marks	20
		Total	100

30/1/2021

RESULT :

Thus Kirchoff's current law and Kirchoff's voltage law are verified practically.