Gridfinity Design Reference v5

This document is intended as a reference tool for designing Gridfinity modules. It is based on and not intended as a replacement for Zack Freedman's original designs. Gridfinity is licensed CC BY-NC-SA and your projects should be licensed accordingly. Report issues to @willtree8#6831 on Discord or via github.

*all measurements in millimeters

Profiles

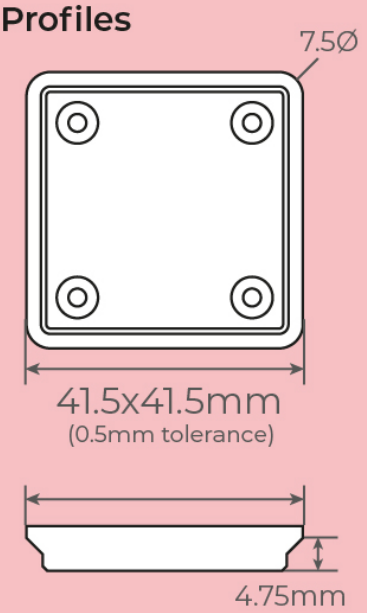

Enlarged Design

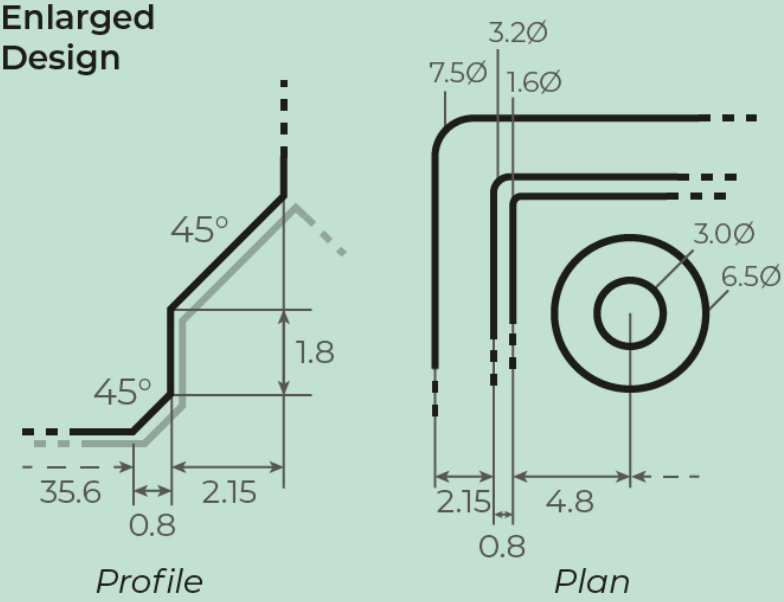

Height Units

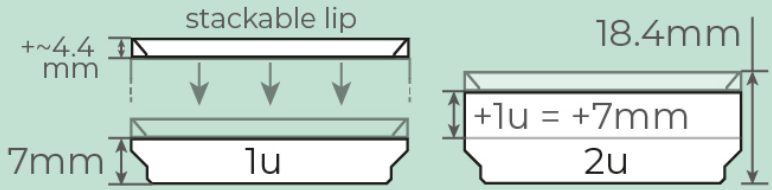

Baseplate Design

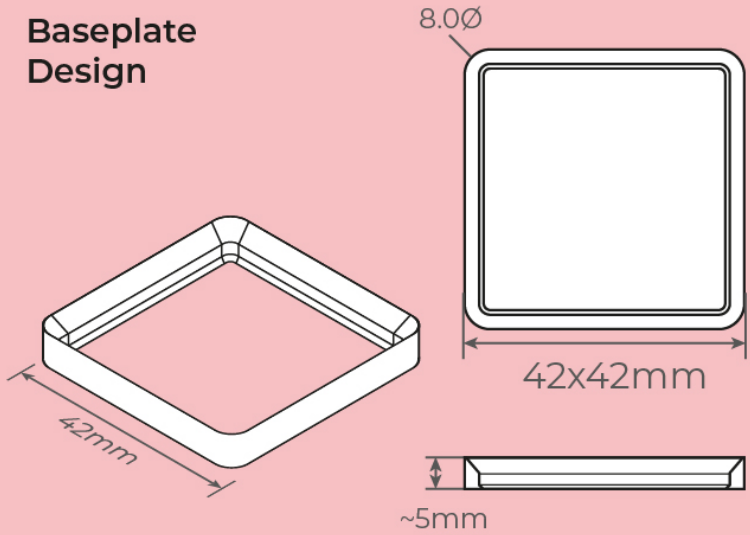

Enlarged Stacking Lip

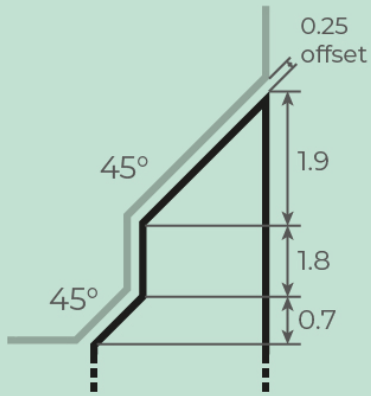

Enlarged Baseplate

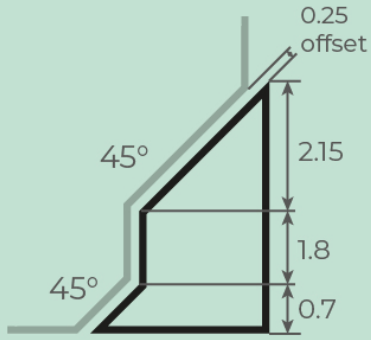

CC BY-NC-SA GRIDFINITY BY ZACK FREEDMAN GRAPHIC BY @willtree8