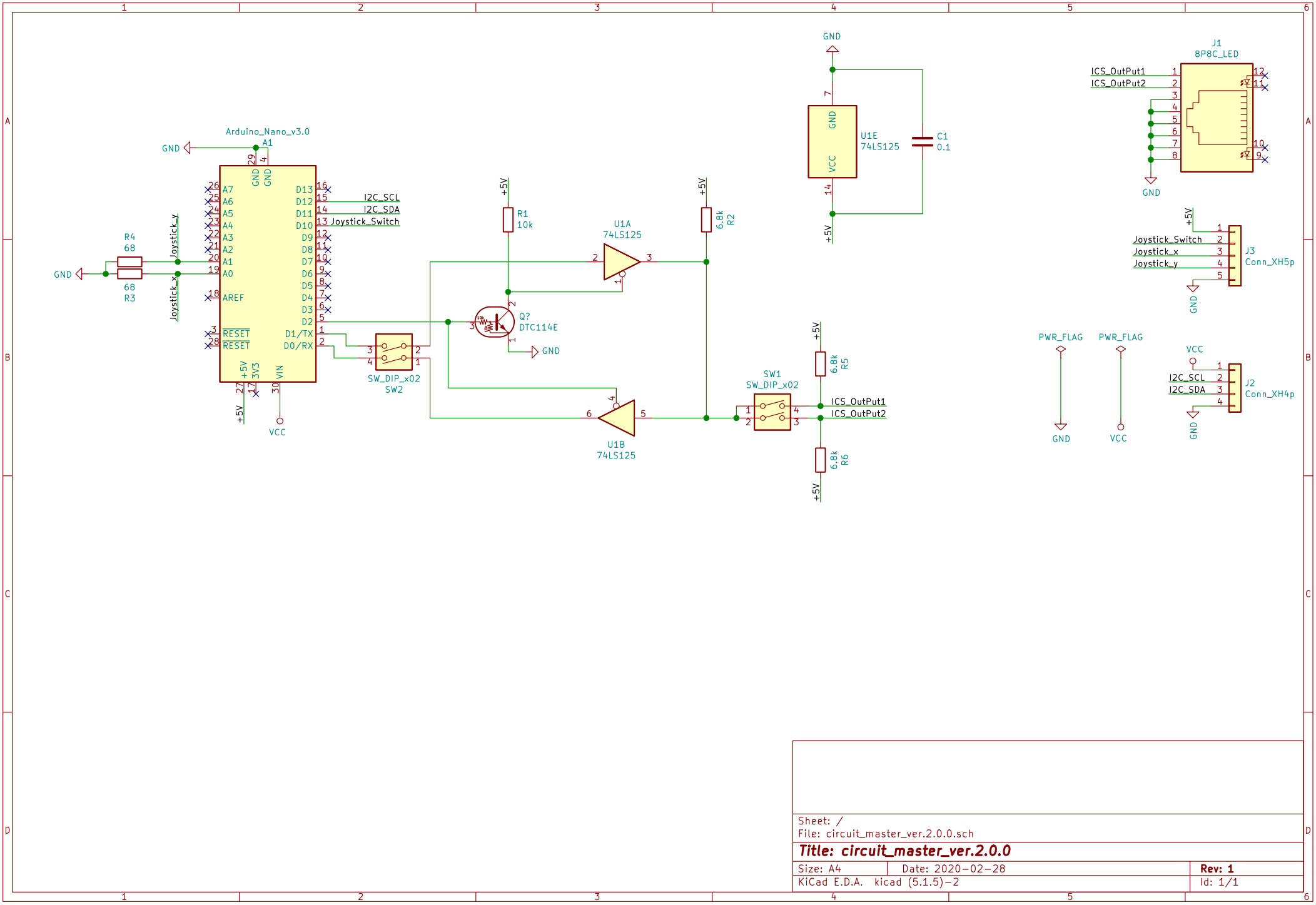

Sheet: /
File: circuit_master_ver.2.0.0.sch

Title: circuit_master_ver.2.0.0

Size: A4	Date: 2020-02-28	Rev: 1
KiCad E.D.A. kicad (5.1.5)-2		Id: 1/1