Prometheus I Technical Brief

- Team Penn Space
- Saleh Aldhafeeri, Kyle Martin, Saeed Alkaabi, Ahmed Mussabah, Jay Parmar, Dexter Bailey
- Professor. Sara Lego
- AEROSPACE DEPARTMENT

- AERSP 497 Capstone Challenge
- 08/13/2025

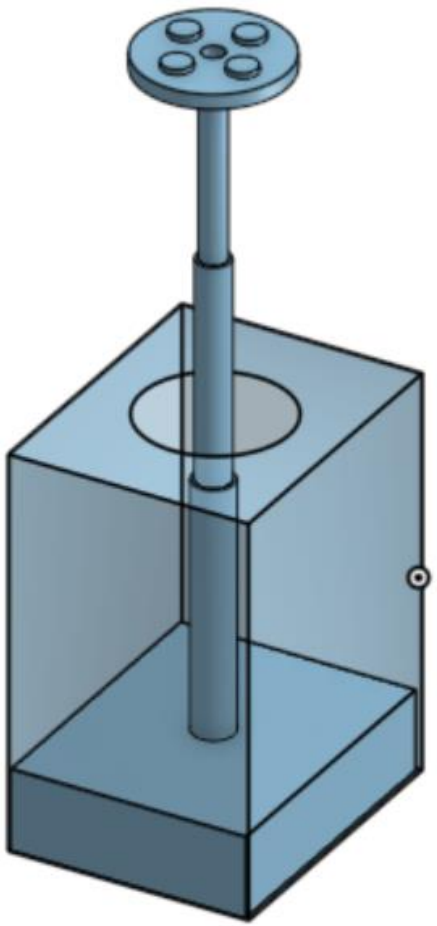

Introduction & Problem Statement

- Response to capstone challenge, ISAM capabilities Payload hosted on Blue Canyon X-Sat Venus host.
- Prometheus I refueling payloads.
- Problem: LEO microsats retire early due to hydrazine depletion despite healthy hardware.
- Solution concept: rendezvous → soft-capture docking → controlled hydrazine transfer → safe depart ≥50 m.
- Ops constraints: small bus envelope/power fit, thermal survivability, sunlit scheduling, autonomous C&DH, GN&C contact accuracy.

Mission Prometheus I will demonstrate a small-bus hosted refueling payload that safely docks and transfers hydrazine to extend satellite life in LEO.

Existing systems

Orbit Fab

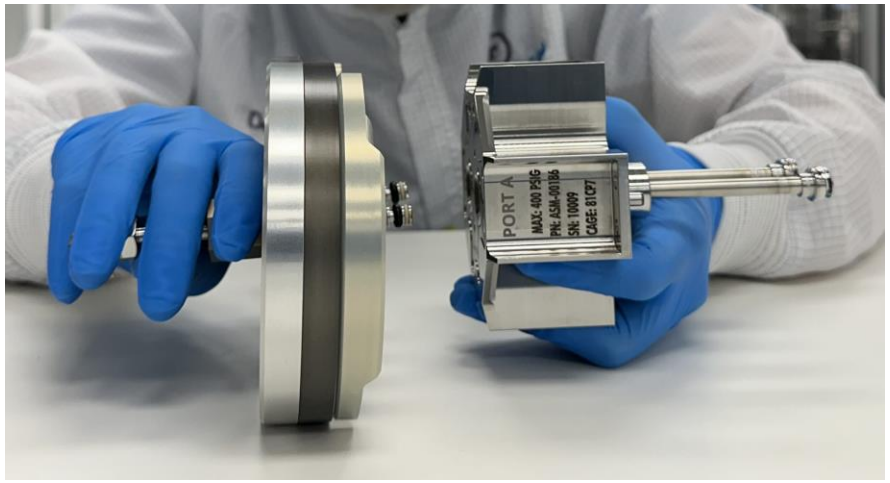

[1] RAFTI valve

- Commercial refueling interface; flight-qualified; growing adoption.
- Requires preinstalled port; legacy clients excluded; licensing/supply risk for academic team; not open/royalty-free. [1]
- GEO operations only [1].

OSAM-1

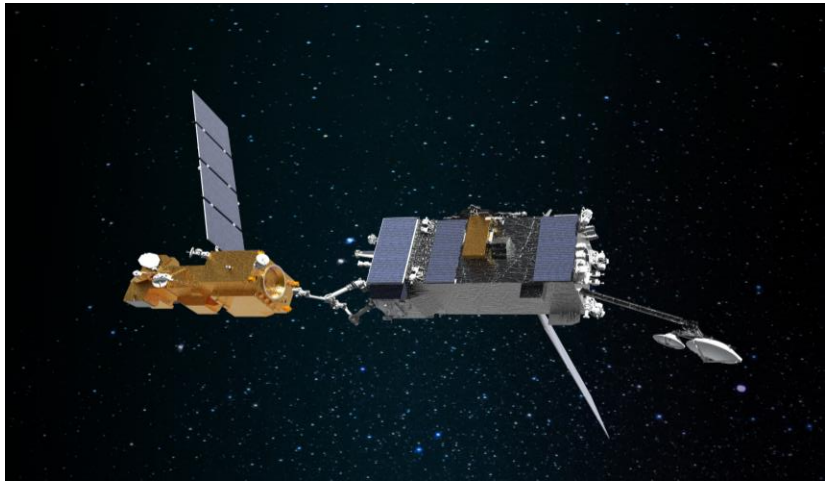

[2] OSAM-1 Mission animation

- Advanced blanket removal and multi-tool servicing. [2]
- Cancelled for cost/schedule; architecture too complex for a single-fluid top-off within tight caps [2].

Filling The Gap: Prometheus I

- Operation in LEO
- Targets small and micro satellites (3-5kg tanks)
- Small Spacecraft, 70 kg payload. (Cheaper)
- Fully Autonomous on orbit docking. Doesn’t require satellites to travel to refueling station
- Open, royalty-free interface.
- Magnetic, connector + adaptor compliment with common fill/drain geometries.

Top Level Requirements & Verification Methods

ID	Requirement	Rationale	Verification
R1	Spacecraft shall deliver total of 30 kg hydrazine monopropellant to a clients during the servicing operation.	Core mission success metric and service value.	Analysis Structure subsystem, tank capacity and refuel mechanisms.
R2	Payload shall fit entirely within the Venus X-Sat payload cavity of 20.5 × 16.4 × 27 in.	Ensures mechanical compatibility with the single-array host configuration.	Inspection: CAD envelope
R3	Total spacecraft power budget shall be ≤ 222 W in all operation modes.	Guarantees operability on the single-array power budget.	Analysis: Power budget
R4	Spacecraft shall autonomously service rendezvous, soft docking, propellant transfer, and depart to a ≥50 m	Demonstrates service and post ops safety.	Analysis: GNC and C&DH subsystems
R5	Space craft shall meet environmental survivability, orbital debris mitigation, and applicable RFP, export, and licensing requirements.	Enables safe flight.	Analysis: Every subsystem meets the rules and regulations

Initial Concepts

- Prometheus Compact Robotic Refueler

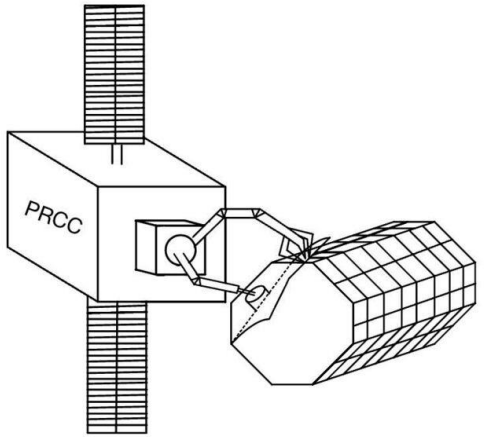

- Prometheus Quick Connect

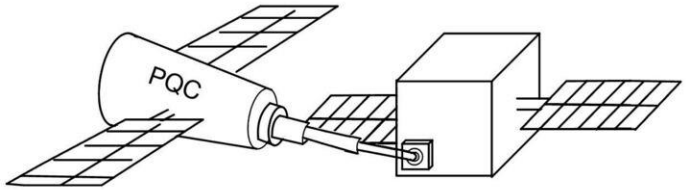

- Prometheus SPHERE

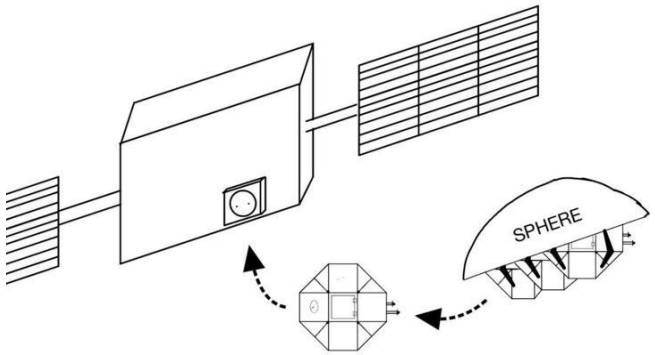

Down Select

	1	2	3			
Complexity: Autonomous 20%	More than 4 moving parts needed to communicate with each other for interaction.	2-3 moving parts needed to communicate for interaction	One or less moving part needs to comminicate			
				1	2	3
Cost 15%	Estimated over 2 billion.	Estimated between 1 billion & 2 billion.	Estimated under 1 billion.	Good	Better	Best
Maturity 10%	All completely new ideas. No basis in previous expirements.	Inconperates new uses and technology with proven concepts.	Majority of the system has been tested before but technology is used in new ways.			
Safety: Risk 25%	High opportunity for combustion or failure of the systems. Pressure could comprismise mission	Modererate opportunity for combustion. Systems are not put in high risk positions.	Low opportunity for combustion. Systems are safe from exposure.			
Adaptability 20%	Designed to only interact with one type of satalite.	Can interact with multiple kinds of satallites.	Can interact with any kind of satallite.			
Controls 10%	Needs greater than two complex controls system	Needs two complex controls system	Needs less one or less complex control system			

	Compact Robotic Refuler	Prometheus Quick Connect Interface (PQC)	Prometheus SPHERE
Complexity: Autonomous 20%	2	3	1
Cost 15%	1	3	3
Maturity 10%	2	2	2
Safety: Risk 25%	1	2	2
Adaptability 20%	3	1	1
Controls 10%	1	3	2
Prefrence equation calculation	1.7	2.25	1.75

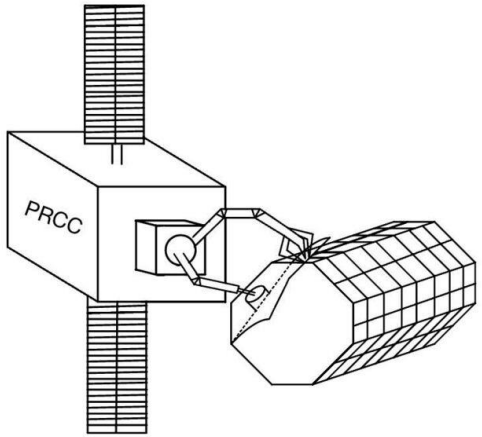

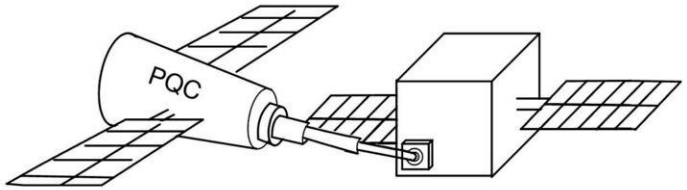

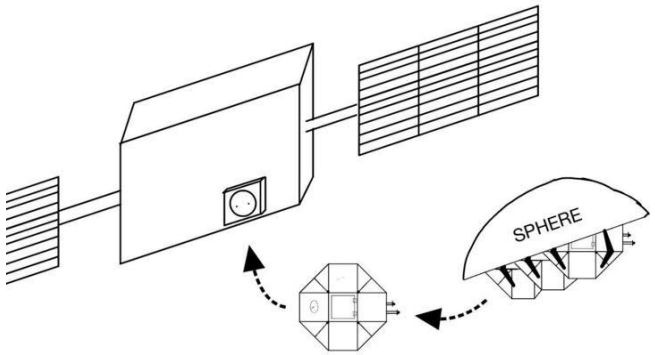

CONOPS

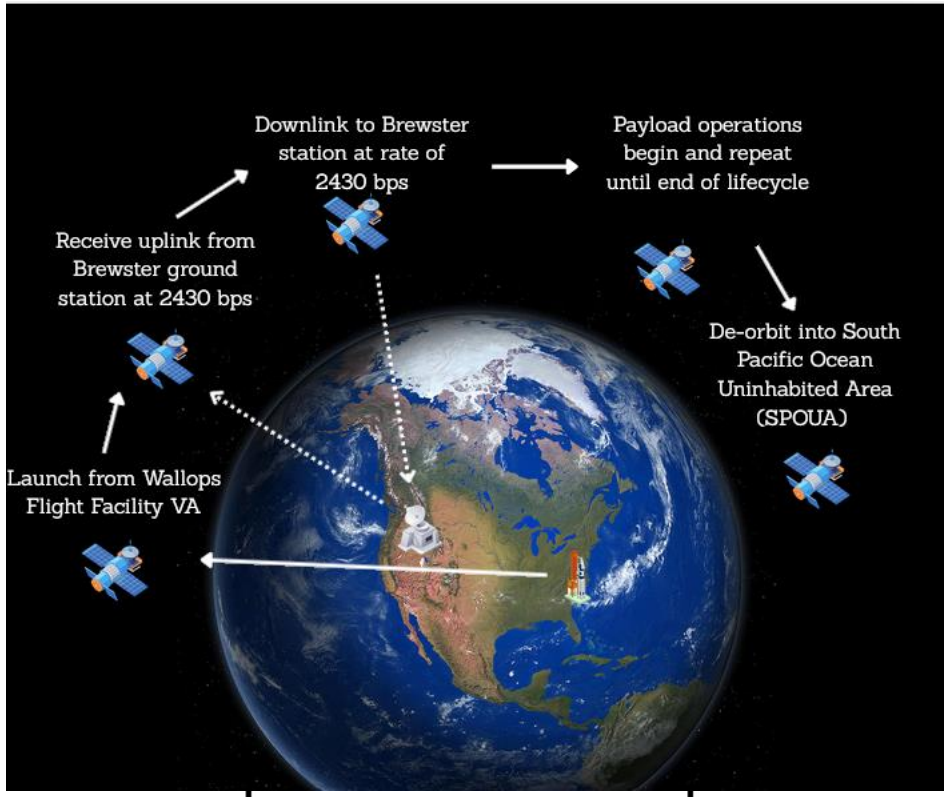
Downlink to Brewster station at rate of 2430 bps
Payload operations begin and repeat until end of lifecycle
Receive uplink from Brewster ground station at 2430 bps
De-orbit into South Pacific Ocean Uninhabited Area (SPOUA)
Launch from Wallops Flight Facility VA

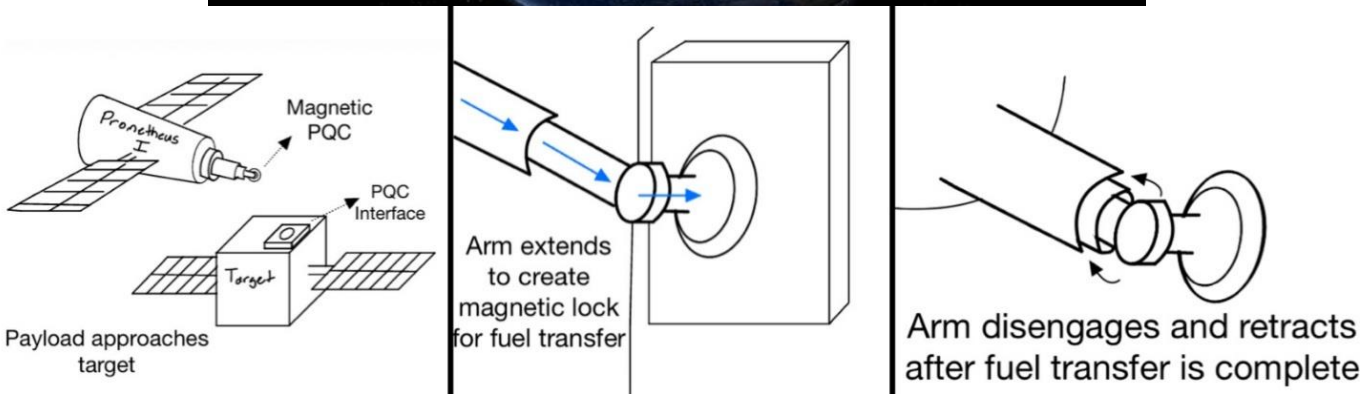
Prometheus I
Magnetic PQC
PQC Interface
Target
Payload approaches target
Arm extends to create magnetic lock for fuel transfer
Arm disengages and retracts after fuel transfer is complete

Preliminary Design: Structure

Material	Carbon fiber T700	Aluminum Alloy 7075	Titanium alloy Ti6Al7Nb
Tensile Strength 25%	4900 GPa	570MPa	1000 MPa
Elastic Modulus 35%	230GPa	71.7 Gpa	113.8Gpa
Thermal conductivity 10%	20 W/(k*m)	130 W/(m*k)	7.2 W/(m*k)
Density 30%	1.6 g/cm^3	2.81 g/cm^3)	4.42 g/cm^3

[3],[4],[5] Materials data sheet

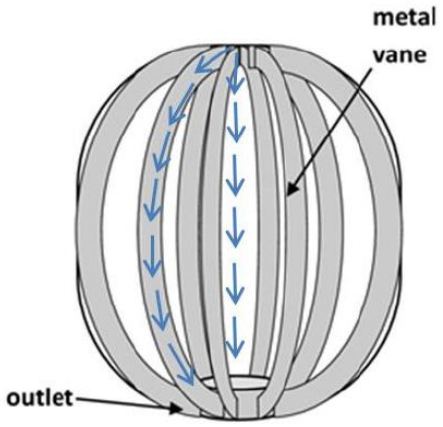

[6], [7] Vein Propellent management

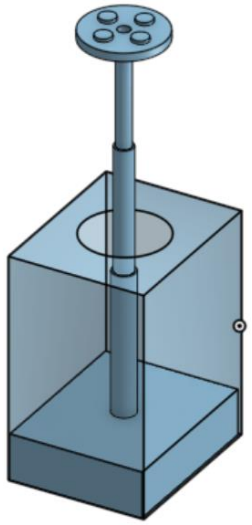

Mission Prometheus I 3D CAD design

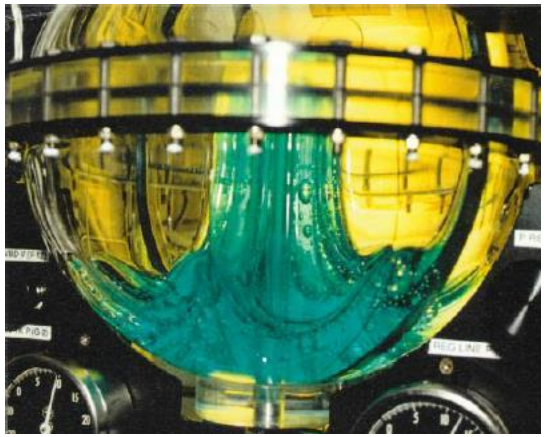

Preliminary Design: Structure

Segment	Item	Mass (kg)	Margin	Allocated (kg)
Payload	Outer Structure Carbon Fiber 700	23,29	N/A	23.29
Payload	Hydrazine propellant	30	N/A	30
Payload	Tank	5.295	10%	5.8245
Payload	Arm structure	4.022	10%	4.4242
Payload	Prometheus Quick Connect	0.579	10%	0.6369
Payload	Small subsystems margin (payload C&DH, sensors, valves, harness)	0.5	N/A	0.5
Total	Payload and its subsystems	63.686	N/A	64.6756

Preliminary Design: Structure

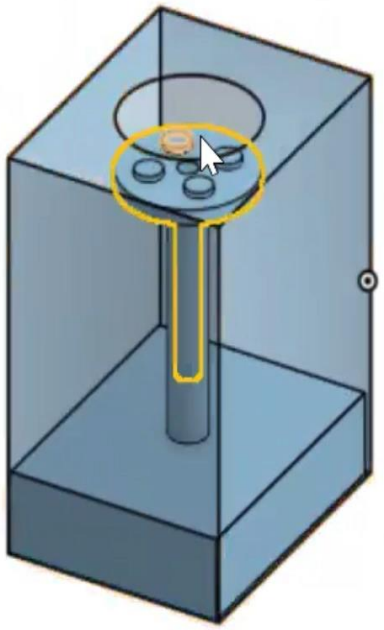

3D CAD design dimensions

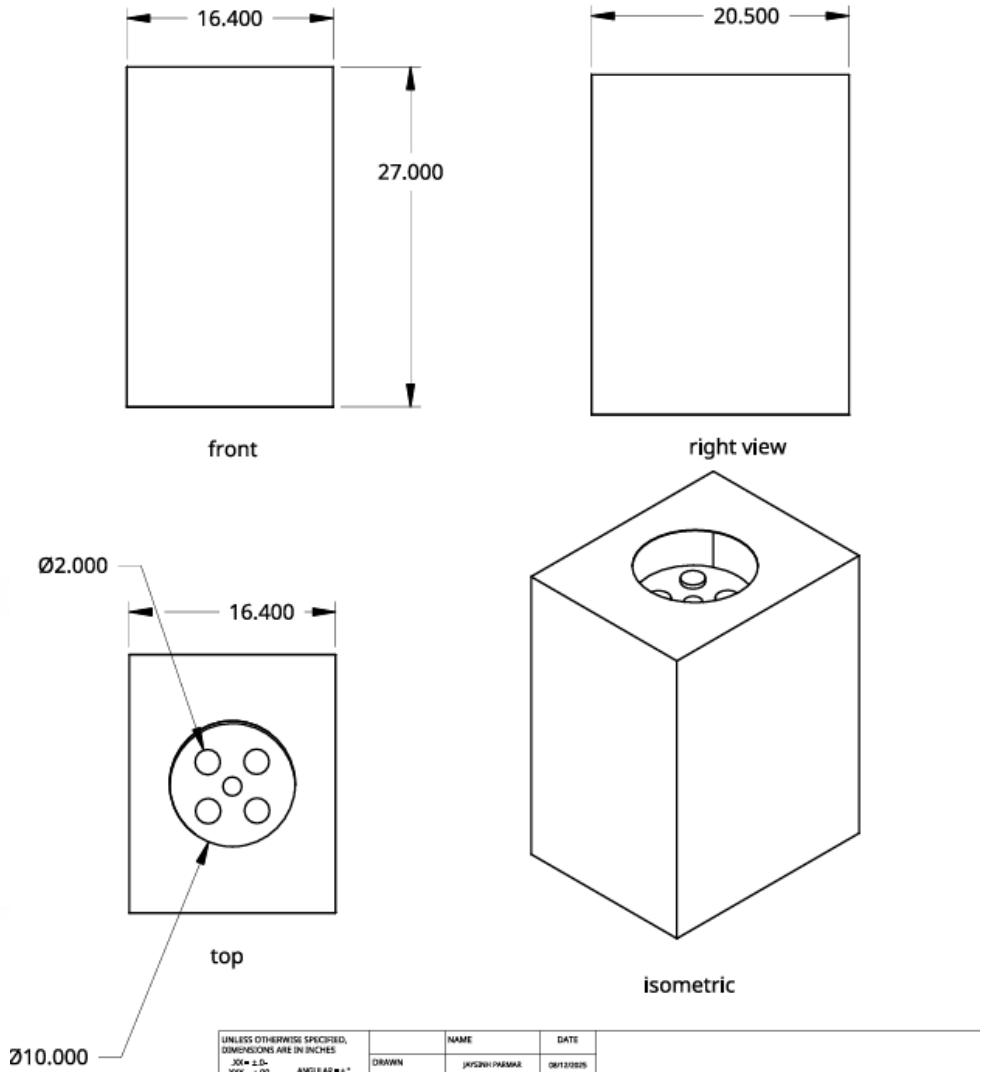

Preliminary Design: Propulsion

- Limited power.
- Electric Propulsion systems are slow

[8][9][10][11] For propellent system data sheet

Criterion	Weight	Goal	Green Monoprop LMP-103S	Biprop MMH/NTO	Green ACS	Cold Gas N_2
Prop Mass for Δv [kg]	0.3	Min	10.088	7.463	4.291	33.934
Normalized Value			*0.8044*	*0.893*	*1*	*0*
Time to Execute Δv [hr]	0.2	Min	6.25	1.562	140.958	20.833
Normalized Value			*0.9664*	*1*	*0*	*0.8618*
Peak Power [W]	0.1	Min	80	50	200	10
Normalized Value			*0.6316*	*0.7895*	*0*	*1*
TRL (0–1)	0.1	Max	0.9	0.95	0.85	1
Normalized Value			*0.3333*	*0.6667*	*0*	*1*
Safety/Toxicity	0.1	Min	0.2	0.8	0.2	0
Normalized Value			*0.75*	*0*	*0.75*	*1*
Complexity (1-3)	0.1	Min	2	3	3	1
Normalized Value			*0.5*	*0*	*0*	*1*
Integration Fit (0–1)	0.05	Max	0.9	0.8	0.9	1
Normalized Value			*0.5*	*0*	*0.5*	*1*
Tankage Fraction (dry/prop)	0.05	Min	0.15	0.25	0.25	0.5
Normalized Value			*1*	*0.7143*	*0.7143*	*0*
Totals:	**1**		**0.73109**	**0.649235**	**0.435715**	**0.62236**

Preliminary Design: Communication and Ground Station

- Communication windows
- Brewster station
- Data Margin
  - Uplink
  - Downlink

Freq.	f	Ghz	input	7.00
Xmtr Pwr	P	W.	input	1.0000
Xmtr Pwr	P	dbW	10 log(P)	0.00
Xmtr line loss	L_l	dB	input	-1.00
Xmtr Ant. Beamwidth	θ_t	deg	Eq. (13-19)	0.857
Peak Xmt. Ant. Gain	G_{pt}	dB	Eq. (13-20)	45.64
Xmt. Ant. Diam.	D_t	m	input	3.50
Xmt. Ant. Pointing Error	e_t	deg	input	0.10
Xmt. Ant. Pointing Loss	L_{pt}	dB	Eq. (13-21)	-0.16
Xmt Ant. Gain	G_t	dB	$G_{pt}+L_{pt}$	45.48
EIRP	EIRP	dB	$P+L_l+G_t$	44.48
Prop. Path Length	S	km	input	7.000E+02
Space Loss	L_s	dB	Eq. (13-23a)	-166.25
Prop. & Polariz. Loss	L_a	dB	Fig. 13-10	-0.10
Rcv. Ant. Diam.	D_r	m	input	0.10
Peak Rcv. Ant. Gain	G_{rp}	dB	Eq. (13-18a)	14.72
Rcv. Ant. Beamwidth	θ_r	deg	Eq. (13-19)	30.00
Rcv. Ant. Pointing Error	e_r	deg	input	1.00
Rcv. Ant. Pointing Loss	L_{pr}	dB	Eq. (13-21)	-0.01
Rcv. Ant. Gain	G_r	dB	$G_{rp}+L_{pr}$	14.70
System Noise Temp.	T_s	K	input (using Tal	135.00
Data Rate	R	bps	input	2430.00
Est. E_b/N_o (1)	E_b/N_o	dB	Eq. (13-13)	66.27
Bit Error Rate	BER	--	input	1.0E-05
Rqd. E_b/N_o (2)		dB	Fig. 13-9 (BPSK	4.50
Implementation Loss (3)		dB	input (standard	2.00
Margin		*dB*	*(1)-(2)+(3)*	*63.77*

Uplink [12]

Freq.	f	Ghz	input	7.00
Xmtr Pwr	P	W.	input	0.0100
Xmtr Pwr	P	dbW	10 log(P)	-20.00
Xmtr line loss	L_l	dB	input	-0.50
Xmtr Ant. Beamwidth	θ_t	deg	Eq. (13-19)	30.000
Peak Xmt. Ant. Gain	G_{pt}	dB	Eq. (13-20)	14.76
Xmt. Ant. Diam.	D_t	m	input	0.10
Xmt. Ant. Pointing Error	e_t	deg	input	1.00
Xmt. Ant. Pointing Loss	L_{pt}	dB	Eq. (13-21)	-0.01
Xmt Ant. Gain	G_t	dB	$G_{pt}+L_{pt}$	14.74
EIRP	EIRP	dB	$P+L_l+G_t$	-5.76
Prop. Path Length	S	km	input	7.000E+02
Space Loss	L_s	dB	Eq. (13-23a)	-166.25
Prop. & Polariz. Loss	L_a	dB	Fig. 13-10	-0.10
Rcv. Ant. Diam.	D_r	m	input	3.50
Peak Rcv. Ant. Gain	G_{rp}	dB	Eq. (13-18a)	45.60
Rcv. Ant. Beamwidth	θ_r	deg	Eq. (13-19)	0.86
Rcv. Ant. Pointing Error	e_r	deg	input	0.10
Rcv. Ant. Pointing Loss	L_{pr}	dB	Eq. (13-21)	-0.16
Rcv. Ant. Gain	G_r	dB	$G_{rp}+L_{pr}$	45.43
System Noise Temp.	T_s	K	input (using Tal	135.00
Data Rate	R	bps	input	2430.00
Est. E_b/N_o (1)	E_b/N_o	dB	Eq. (13-13)	46.77
Bit Error Rate	BER	--	input	1.0E-05
Rqd. E_b/N_o (2)		dB	Fig. 13-9 (BPSK	4.50
Implementation Loss (3)		dB	input (standard	2.00
Margin		*dB*	*(1)-(2)+(3)*	*44.27*

Downlink [12]

Preliminary Design: GNC/Attitude

- Navigation
- Attitude
- Actuators
- ±2 mm relative position and ±1° relative attitude at contact [13]

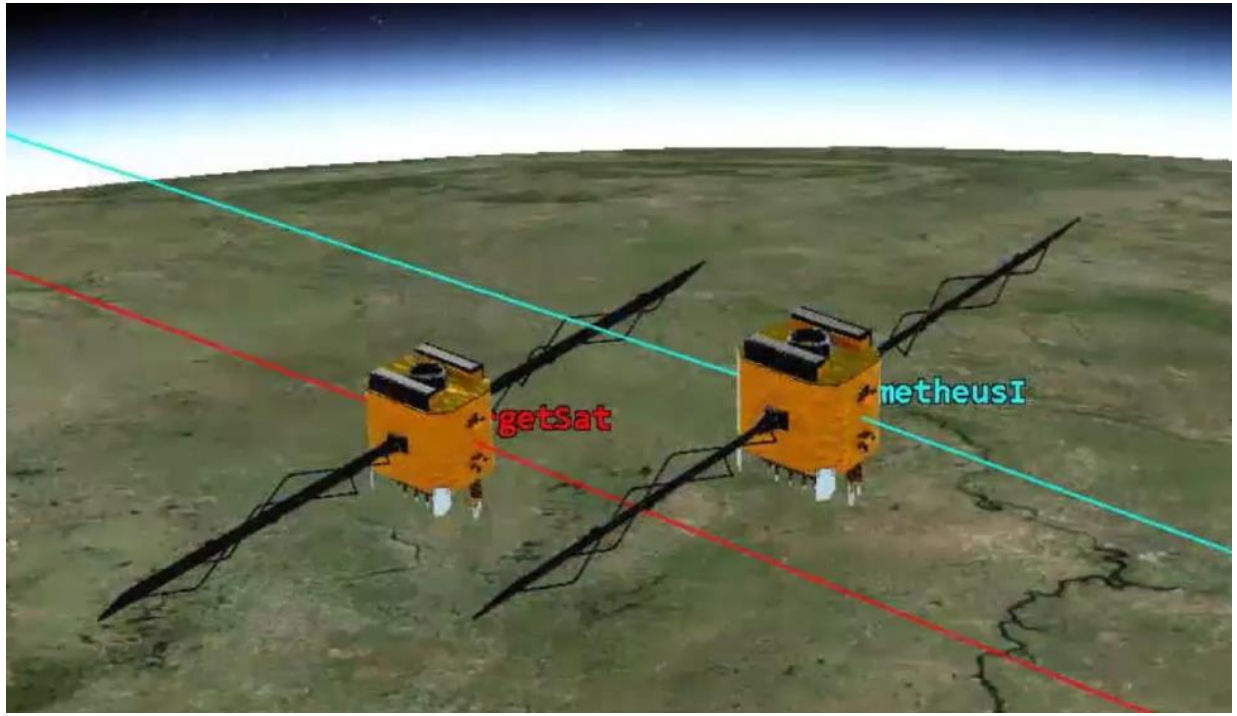

Preliminary Design: Thermal

- Active vs passive systems
- Requirements [14]
  - Hydrazine tank 7–49 °C
  - Valve interface between −7 and 55 °C
  - Capture ring between −10 and 50 °C
  - Provide temperature telemetry sampled ≥ 1 Hz, accuracy ≤ 0.5 °C for tank, valve, ring, and avionics.
- Power

Preliminary Design: Control and Data handling

Data Type	Related Function (SMAD)		Execution Frequency (Hz)	Bits	Duration (s/day)	Total Volume (bits/day)	Volume (KB/day)
Housekeeping Data	Telemetry Processing		10.0	64	86,400	55,296,000	6750 KB
Altitude Data	Rate Gyro + Sun Sensor		10.0 + 1.0 = 11.0	64	86,400	60,544,000	7392 KB
Payload/Science Data	Simple Autonomy		1.0	64	86,400	5,529,600	675 KB
Commands	Command Processing		10.0	64	86,400	55,296,000	6750 KB

Data Volume [15]

Function	Code (Kwords)		Data (Kwords)	Throughput (KIPS)	Frequency (Hz)
Telemetry Processing	1.0		2.5	3.0	10.0
Command Processing	1.0		4.0	7.0	10.0
Simple Autonomy	2.0		1.0	1.0	1.0
Sun Sensor (Attitude)	0.5		0.1	1.0	1.0

Memory Requirements [15]

Preliminary Design: Power budget & subsystem

- Single solar wing rated 222 W Li-ion battery 10.2 Ah on a 28 VDC main bus [1].
- Orbit geometry from STK: period 1 h 37 m 20 s, eclipse 34.411 min.
- Sunlit sizing result: required array power during illumination = 132.5 W. The installed 222 W provides = 90 W headroom to run loads and recharge.
- Per-orbit energy balance: surplus = 93.8 Wh after covering sunlit loads and replacing eclipse energy.
- Battery check: capacity needed = 8.35 Ah which is below the installed 10.2 Ah.
- Operations policy: schedule activities in sunlight and avoid refueling during eclipse

Subsystem	Sun (W)	Eclipse (W)	Refueling (W)
Communications	12.2	12.2	0
Bus C&DH	0.9	0.9	0.9
GNC	22.55	22.5	22.55
Thermal	0	43.2	0
Power	0	0	0
Propulsion	0	0	15
Structure & Mechanical (Arm)	0	0	79.89
Fluid Transfer (Pump)	0	0	38.3
Payload Thermal	0	59.9	59.9
Payload C&DH	0	0	0.9
Total	35.65	138.7	217.44

Risk Mitigation

Risk	Mitigation
1) Autonomous failure	Add manual control and an emergency stop. If comms or software freeze for 5 seconds, auto-halt and back away to a safe pose.
2) Docking failure	Cap approach speed at 1 cm/s and move in short steps with a pause to check alignment. If latch fails twice, back out and retry later using a manual input
3) Damage during docking	Put a soft bumper ring around the end effector and round all edges.
4) Power not enough during eclipse	Refuel only in sunlight
5) Hit debris	Update GNC and C&DH subsystem with commands to make the GNC and sensors to be alert and always on

		Impact				
		Negligible	Minor	Moderate	Significant	Severe
Possibility	Very Likely			1	4	
	Likely				2, 5	
	Possible		3			3
	Unlikely		2	1		
	Very Unlikely				4 5	

Next Steps

- 3D modeling and physical testing
  - Stress
  - Thermal
  - Structure
- System Placement

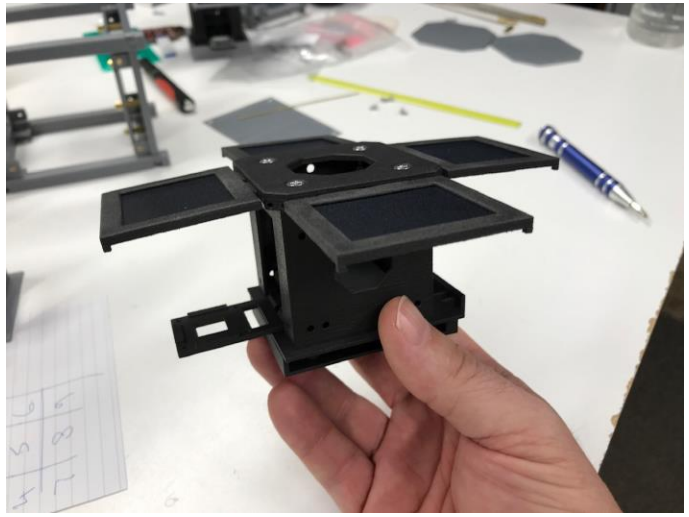

[17] windform satellite 3D model

Refrences

[1] Orbit Fab, “Space Force Approves Orbit Fab’s RAFTI as an Accepted Refueling Interface for Military Satellites,” Orbit Fab News, Lafayette, Colorado/Logan, Utah, Aug. 5, 2024. Online. Available: orbitfab.com/news/rafti-preferred-standard/

[2]“On-orbit Servicing, Assembly, and Manufacturing 1 (OSAM-1),” *NASA*, accessed Aug. 12, 2025. [Online]. Available: https://www.nasa.gov/mission/on-orbit-servicing-assembly-and-manufacturing-1/

[3] AZoM, "AZo Materials – The A to Z of Materials," [Online]. Available: https://www.azom.com. [Accessed: Aug. 5, 2025].

[4] Toray Composite Materials America, Inc., “T700G Technical Data Sheet,” Rev. 5, Apr. 13, 2018. [Online]. Available: https:// www.toraycma.com/wp-content/uploads/T700G-Technical-Data-Sheet-1.pdf. Accessed: Aug. 13, 2025.

[5] ASM MatWeb, "Aluminum 7075-T6; 7075-T651," MatWeb Material Property Data. [Online]. Available: https://asm.matweb.com/search/specificmaterial.asp?bassnum=MA7075T6. [Accessed: 13-Aug-2025].

[6] J. A. Pellegrino, J. M. Biegel, and D. R. Stephenson, “Thermal control system design for the Restore-L mission,” NASA, Greenbelt, MD, USA, NASA Technical Report 20170000667, 2017. [Online]. Available: https://ntrs.nasa.gov/api/citations/20170000667/downloads/20170000667.pdf. Accessed: Aug. 13, 2025.

[7] PMD Technology, “Propellant Management Device Design and Analysis,” accessed Aug. 13, 2025. [Online]. Available: http://www.pmdtechnology.com/Index.html

[8] ECAPS (Bradford Space), “Green propellant LMP-103S,” n.d. [Online]. Available: https://www.ecaps.se/rocket-fuel-1

[9] S. Miller, “Performance Optimization of Storable Bipropellant Engines for Spacecraft,” NASA/TM-2007-214808, 2007. [Online]. Available: https://ntrs.nasa.gov/api/citations/20070031975/downloads/20070031975.pdf

[10] Rafael Advanced Defense Systems, “Space Propulsion Catalog 2024,” 2024. [Online]. Available: https://www.rafael.co.il/wp-content/uploads/2024/05/RAFAEL-SPACE-CATALOG-2024_compressed.pdf

[11] Moog, “Cold Gas Thrusters — Datasheet,” 2021. [Online]. Available: https://www.moog.com/content/dam/moog/literature/sdg/space/propulsion/moog-coldgasthrusters-datasheet.pdf

[12] “All-Copper Grounding Network Ensures Reliability at Satellite Communications Station,” *Copper.org*, accessed Aug. 10, 2025. [Online]. Available: https://www.copper.org/applications/electrical/pq/casestudy/satellite_grounding_A6069.php

[13] “ECSS-E-ST-60-10C (Rev. 1): Control Performance,” European Cooperation for Space Standardization (ECSS), Mar. 1, 2017, accessed Aug. 13, 2025. [Online]. Available: https://ecss.nl/standard/ecss-e-st-60-10c-rev-1-control-performance-1-march-2017/

[14] C&R Technologies, “Thermal Desktop / SINDA User Guides,” accessed 2025. [Online]. Available: https:// www.crtech.com/ :contentReference[oaicite:5]{index=5}

[15] Wertz, J. R., Everett, D. F., & Puschell, J. J., “Space Mission Engineering: The New SMAD,” Microcosm Press, 2011. [Online]. Available: https://psu.instructure.com/courses/2387576/modules/items/43519157

[17] K. Sertoglu, “Mini-Cubes successful in 3D printing flight-ready mini satellites,” 3D Printing Industry, Jul. 24, 2020. [Online]. Available: https://3dprintingindustry.com/news/mini-cubes-successful-in-3d-printing-flight-ready-mini-satellites-173942/