Prometheus 1 Mission Description Document Addendum

PENN SPACE TEAM

Mission Prometheus I

Saleh Aldhafeeri, Kyle Martin, Saeed Alkaabi, Ahmed Mussabah, Jay Parmar, Dexter Bailey

Professor. Sara Lego

AEROSPACE DEPARTMENT

AERSP 497 Capstone Challenge

08/14/2025

Table of Contents

List of Figures 3
List of Tables 3
I.Introduction and Problem Statement 4
II.Existing Systems 4
III.Requirements 5
IV.Initial Concepts & Trade Study Down-select 15
Concept 1: Prometheus Compact Robotic Refueler 15
Concept 2: Prometheus Quick Connect (PQC) Interface 16
Concept 3: Prometheus SPHERE 17
V. Mission Architecture and CONOPS 19
VI.Preliminary design 21
Launch Vehicle 21
Structure 23
Communications and Ground Station 25
Command and data handling 27
GNC/ Attitude 30
Thermal 32
Propulsion subsystem 33
Power Subsystem 34
Power Budget 38
Mass Budget 39
VII.Risk Mitigation 39

List of Figures

Figure 1. Prometheus Compact Robotic Refueler 16
Figure 2. Prometheus Quick Connect (PQC) Interface 17
Figure 3. Prometheus SPHERE 17
Figure 4. Mission Architecture 19
Figure 5. PQC operation phase 20
Figure 6. CAD design Figure 7 Payload layout 24
Figure 8. Lateral acceleration for Minotaur I rocket 25
Figure 9. Displacement stress Figure 10 Von Mises Stress 25
Figure 11.STK orbit path 26

List of Tables

Table 1 BCT Venus X-Sat Class Bus Requirements 6
Table 2 Payload Requirements: (Payload, Structure, C &DH, Power, Thermal) 10
Table 3. Down select trade study qualities 18
Table 4. Down select trade study results 18
Table 5. Launch vehicle trade study 22
Table 6. Normalized values for launch vehicle trade study 22
Table 7. Structure material trade study 23
Table 8. Structure trade study evaluation 24
Table 9. Brewster ground station access data 26
Table 10. Uplink budget Table 11. Downlink budget 27
Table 12. Daily Data Volume by Type 27
Table 13. C&DH Subsystem Processing and Memory Requirements 28
Table 14. Flight Computer Trade Study 29
Table 15. GNC/Atittude trade study 31
Table 16. Propulsion decision matrix 34
Table 17. STK eclipse data 37
Table 18. Power energy balance 37
Table 19. Power budget 38
Table 20. Mass budget 39
Table 21. Risk Mitigation Matrix 40
Table 22. Risk Matrix 40

I.Introduction and Problem Statement

This report is submitted in response to a competitive solicitation to design, integrate, and demonstrate a refueling payload on a Blue Canyon X-Sat Venus class host bus [1]. Within that competition framework the team is advancing Prometheus I, centered on the Prometheus Quick Connect payload, to complete a system requirements review and document a credible mission concept with subsystem designs, analyses, and verification paths.

Microsatellites in low Earth orbit frequently reach end of life because hydrazine is depleted while hardware remains functional [2]. The operational consequence is early retirement and replacement rather than life extension. The Prometheus I concept addresses this specific gap with an on orbit refueling service that can rendezvous, dock, and execute a controlled transfer of propellant, then depart safely [3]. The mission architecture, concept of operations, and subsystem designs reflect this purpose. The baseline uses a Venus class host, a compact telescoping arm with a magnetic lock to mate to a collaborative interface [3], and a piston driven transfer method to move propellant in microgravity.

The immediate capability gap is the absence of a compact, standards oriented hydrazine refueling payload that fits within small bus mass and power envelopes and that can serve legacy clients. The payload must survive launch loads, operate through thermal extremes, and perform precise proximity operations and docking within tight alignment windows. The team's subsystem work establishes feasibility within these constraints. Guidance, navigation, and control is sized to achieve ±2 millimeters position and ±1 degree attitude at contact, with abort and retreat behaviors for safety. The power approach assumes the host array and battery resources and plans sunlit scheduling for high draw events. Command and data handling supports semi autonomous operations with event driven storage and downlink via ground passes such as Brewster [4].

Mission statement. Prometheus I will design, integrate, and flight demonstrate a small bus hosted refueling payload that safely rendezvous, docks, and transfers hydrazine to client satellites within defined mass, power, and thermal limits, proving a practical path to extend satellite service life in low Earth orbit.

II.Existing Systems

A review of heritage programs and commercial offerings shows meaningful progress toward servicing in low Earth orbit, but no option directly closes the specific gap addressed by Prometheus I: a compact, safe, and standards based hydrazine top-off for diverse microsatellites within the Venus bus envelope and a seventy kilogram payload limit.

Orbit Fab RAFTI ports. RAFTI provides a commercial refueling interface with growing adoption and recent flight qualification, which demonstrates market traction for in space propellant transfer [5]. However, RAFTI requires the client to carry the port from launch, which excludes the large installed base of legacy satellites. Licensing and supply constraints also introduce program risk for an academic team. As a result, RAFTI does not by itself enable refueling of already on orbit clients without prior hardware, nor does it meet the project aim to publish an open, royalty free interface [6].

NASA Robotic Refueling Mission and related ISS demonstrations. RRM proved key tools and procedures for accessing caps, cutting insulation, and manipulating valve hardware on orbit, and it established a four phase template of rendezvous, docking, transfer, and departure [7], [8]. These campaigns were technology demonstrations on the ISS, not a compact, self contained payload sized for a small bus. Tool change complexity, mass, and test facility dependence make direct adoption impractical for a seventy kilogram hosted payload.

OSAM-1 advanced the state of the art in blanket removal and multi tool servicing, but it was cancelled after cost and schedule growth, with complexity cited as a driver [8]. The architecture does not translate to a simple, single fluid top-off mission with tight mass and power caps.

NASA SUMU SPHERES a free flying helpers. SPHERES established guidance, navigation, and control behaviors for small free flyers and inspired concepts that deliver small payloads to a client [24]. SPHERES did not demonstrate toxic propellant handling, leak tight fluid coupling, or docked load reactions, so it does not satisfy the hydrazine transfer requirement.

Prometheus I targets the unserved intersection of requirements that existing systems do not meet at once: refueling of legacy clients that lack a preinstalled port, compliance with strict mass and power limits of the Venus bus, low autonomy and actuation complexity, and an openly published interface. The Prometheus Quick Connect proposes a magnetic, bayonet style connector with an adaptor sleeve for common fill and drain geometries, enabling leak tight, bi directional transfer without complex multi tool sequences while keeping the interface specification royalty free [9]. This narrows the gap between heritage demonstrations and a practical service that can operate within the defined constraints.

III.Requirements

This section defines the top-level “shall” statements that govern Prometheus I and the Venus host spacecraft. Requirements were generated by flowing down from the capability gap and mission objectives through the four-phase mission architecture (rendezvous, docking, transfer, departure), and then cross checking against bus interfaces, environmental limits, regulatory constraints, and the project’s mass and power budgets. Ending with evaluation of each subsystem and make sure it functions to execute the mission objectives. The result is a set of verifiable specifications (not design choices) organized as mission/system requirements, a Venus bus table Bus Requirements (BR.x) , and an ISAM payload requirements table (PR.x). For example, the bus must provide the payload envelope and electrical allocation dictated by the RFP and energy model (≤222 W peak power with a campaign charge cap and the standard Venus volume/mass limits), while the payload must meet performance and packaging outcomes such as computing a relative navigation solution, docking to establish a sealed transfer path, and transferring a bounded propellant mass within a defined timeline.

Requirements making process used a structured trace from 1-objectives 2-functions 3-performance measures, then allocation to bus and payload. Power and mass caps were anchored in the project budgets and were carried into the requirements to guarantee feasibility: end-of-life

array generation near 222 W and a campaign charge limit inform the bus and payload power "shall" statements, and packaging/mass limits reflect the Venus envelope and the payload's current best estimate with margin. The power mode analysis (Idle Sunlight, Idle Eclipse, Refueling) demonstrated that refueling must be scheduled in sunlight to avoid eclipse shortfalls, which in turn is enforced by requirements that cap peak power and cumulative charge draw. The mass roll-up established allocations for hydrazine, tank, arm, and connector that keep the payload within the stowed volume and ≤70 kg at flight readiness; these allocations are reflected as packaging and mass "shall" statements in the payload table. Remaining requirements were designed in compliance with international space regulations.

Numbering and syntax follow a consistent convention in support of traceability and change control. Bus Requirements are labeled BR.1–BR.7 by (1.General RFP and regulations etc, 2.Structure, 3.Propulsion, 4.C&DH, 5.Power, 6.Thermal, and 7.GNC), and Payload Requirements are labeled PR.1–PR.5 (1.Mission Functions, RFP and regulation, 2.Structure/Mechanisms, 3.Power, 4.Avionics(C&DH), 5.Thermal). Under each requirement branch there's a number of sub-branches which are testable statement with an objective e.g "The payload shall transfer 3.0–5.0 kg hydrazine per operation,". Each "child" requirement is traceable back to one or more "parents" (mission objective, CONOPS phase, or external constraint) and, if applicable, to the budget item that established the value. Verification is designated and recorded in a Requirements Verification Matrix (RVM). For every BR.x.x and PR.x.x, the matrix specifies the method (Test, Analysis, Inspection, Demonstration) and indicates where the verification is located in this report by a "Report Reference (page).". The traditional examples are: analysis for battery capacity and bus power generation; inspection for harness voltage drop and structure envelope tolerances; demonstration for transfer and docking operations; and test for launch vehicle loads where it was either tested by NASA or SpaceX. This template ensures that each requirement has an objective success criterion, a responsible verification technique, and a clear trace back to the relevant section, figure, or table of the final document. Compatibility with host bus capacities and budgets is intentional.

The bus table limits array power, battery capacity, payload power constraints, and eclipse load; the payload table limits energy consumption per campaign, stowed volume and mass constraints, and functional performance to rendezvous, mate, and transfer within those constraints. Cumulatively, the BR.x and PR.x RVM provide a testable, traceable baseline that is implemented by the detailed subsystem designs (tank, foldable arm, and magnetic PQC connector) without including design specific language in the requirements themselves.

Table 1 BCT Venus X-Sat Class Bus Requirements

ID	Requirement	Rational	Verification and Location
BR.1.1	The bus shall supply the payload up to 222 W using a single solar wing array.	Matches payload peak power and bus specifications in the RFP	Analysis (pg34)

BR.1.2	The bus shall allocate a payload envelope of 20.5 × 16.4 × 27.	Ensures accommodation within ride-share and bus constraints. RFP	Analysis, Demonstration and prototype (pg23-24)
BR.1.3	The bus shall provide and maintain keep out zones and clearance for payload arm deploy, operate, and re stow, including a defined stow envelope.	Prevents interference during payload operations.	Analysis, Inspection (pg23-24)
BR.1.4	The bus shall provide a thermal interface that rejects payload waste heat during refueling.	Prevents over temperature of lines, pumps, and avionics.	Analysis (pg32)
BR.1.5	The bus shall provide a battery with 28VDC and capacity of 10.2 Ah.	Maintains stable voltage to actuators and avionics.	Analysis, Inspection (pg 34-35)
BR.2.1	The primary structure and payload mount shall withstand Minotaur I 12g quasi static, random vibration, acoustic, and pyroshock loads with FoS ultimate ≥ 1.40	Ensures launch survivability with accepted margin.	Stress Analysis, Demonstration (pg25)
BR.2.2	With the 70 kg payload, the structure shall withstand axial loads and the lateral loads.	Avoids dynamic coupling with launcher and acoustics.	Analysis (pg23-25)
BR.2.3	The payload interface shall support limit loads equal to worst case launcher accelerations 12g times 70 kg, provide stiffness and maintain planarity	Ensures margin and alignment.	Analysis, Inspection, (pg25)
BR.2.4	Materials shall meet ASTM E595 with TML less than 1.0 percent and CVCM less than 0.1 percent and shall be hydrazine compatible or chemically isolated.	Prevents contamination and chemical incompatibility.	Analysis, Inspection. (pg24)
BR.2.5	The Mount thermal isolators shall provide effective conductance ≤ 40 W per K and limit static deflection	Limits heat leak while meeting alignment tolerances.	Analysis, (pg23-25)

BR.3.1	The propulsion system shall be LMP 103S monopropellant with steady state thrust ≥ 1.0 N and Isp ≥ 230 s at nominal conditions.	Provides promptly available thrust with manageable handling risk.	Analysis, inspection (pg34)
BR.3.2	The propulsion system shall execute a terminal approach of delta v equal to 10 m/s in less than 4 h.	Keeps terminal operations within practical windows.	Analysis, inspection (pg33)
BR.3.3	From fire command, time to start the thrust shall be ≤ 200 ms.	Enables precise and quick control and aborts.	Analysis, inspection (pg.33)
BR.3.4	Minimum impulse shall be ≤ 0.25 N·s with minimum pulse width at nominal conditions.	Enables fine translation impulses.	Inspection (pg34)
BR.3.5	Propellant capacity shall deliver spacecraft delta v ≥ 50 m/s at current best estimate mass 10.8kg of LMP propellent	Ensures maneuver authority with margin.	Analysis, Inspection (pg33-34)
BR.4.1	The flight computer shall sustain ≥ 12 KIPS with 2 times margin under worst case tasks, input or output contention.	Meets processing need with schedule margin.	Analysis (pg27)
BR.4.2	Program and data memory shall each be at least 32 KB.	Supports two day store and forward.	Inspection, (pg27-28)
BR.4.3	The C&DH shall ingest, timestamp, queue, and route without loss housekeeping 10 Hz by 64 bits.	Ensures deterministic handling at stated rates.	Analysis (pg28)
BR.4.4	An onboard real time clock shall support time tagged commands and telemetry with drift less than 1 s per day over 48 h without ground sync.	Maintains event timing across outages.	Analysis (pg29)
BR.4.5	Non-volatile storage shall be ≥ 50 MB for at least two days of onboard retention.	Supports autonomous operations.	Analysis,(pg28-29)

BR.5.1	End of life solar generation shall be ≥ 135 W at array maximum power point.	Meets eclipse generation capability at end of life.	Analysis (pg34-37)
BR.5.2	Battery capacity shall be ≥ 8.35 Ah with round trip efficiency ≥ 0.90.	Satisfies the eclipse case while preserving battery life.	Analysis (34-36)
BR.5.3	The power subsystem shall enforce bus power caps of ≤ 222 W peak and ≤ 10.2 Ah while refueling.	Protects the bus and ensures allocation compliance.	Inspection (34)
BR.5.4	Average eclipse bus load shall be ≤ 78.8 W.	Maintains energy balance and eclipse margin.	Inspection (pg35-38)
BR.5.5	PMAD and bus harness shall maintain ≤ 2 percent end to end voltage drop at full load.	Ensures stable voltage and electromagnetic compatibility.	Analysis (pg35)
BR.6.1	The payload thermal control shall be passive primary using MLI and coatings with no dedicated fluid loop; if survival heaters are enabled via the bus, average eclipse heater power shall be ≤ 5 W and daily energy ≤ 20 Wh.	Minimize mass and power while preserving cold case survivability.	Inspection, Analysis (pg32)
BR.6.2	The hydrazine tank temperature shall be maintained from 7 to 49 C in operation and within 0 to 52 C for survival.	Prevent freezing and overheating of propellant.	Analysis (pg32)
BR.6.3	The valve interface temperature shall be maintained from minus 7 to 55 C in operation and within minus 40 to 60 C for survival.	Protect seals from icing and thermal distortion.	Analysis (pg33)
BR.6.4	The magnetic soft capture ring temperature shall be maintained from minus 10 to 50 C in operation and within minus 20 to 60 C for survival.	Preserve alignment performance and magnet strength.	Analysis (pg33)

BR.6.5	Temperature telemetry for tank, valve interface, capture ring, and avionics shall be sampled at ≥ 1 Hz with sensor accuracy ≤ 0.5 C.	Ensure controllability and health monitoring.	Inspection (pg32)
BR.7.1	During docking the GNC shall achieve relative position error ≤ 2 mm and attitude error ≤ 1 degree at 3 sigma within the docking corridor.	Meet interface alignment tolerance.	Analysis (pg30-31)
BR.7.2	During fuel transfer the GNC shall maintain pointing stability jitter ≤ 0.5 degree RMS over any 10 s interval.	Avoid stress on the magnetic bayonet lock.	Inspection (pg31)
BR.7.3	From 10 km to 1 km range the coarse navigation solution shall achieve absolute position error ≤ 100 m at 3 sigma and velocity error ≤ 0.1 m per s at 3 sigma.	Enable safe approach into the terminal zone.	Analysis (pg31)
BR.7.4	The relative pose estimator shall update at ≥ 5 Hz with position noise ≤ 1 cm RMS and attitude noise ≤ 0.2 degree within 10 m relative range.	Provide centimeter level control authority for docking.	Analysis (pg30)
BR.7.5	The GNC shall autonomously detect loss of relative pose or off nominal motion and shall command an abort within ≤ 1 s and establish a safe hold or retreat within ≤ 5 s.	Reduce collision risk during anomalies.	Analysis (pg30-32)

Table 2 Payload Requirements: (Payload, Structure, C &DH, Power, Thermal)

ID	Requirement	Rational	Verification
PR.1.1	The payload shall compute a navigation	Provides the state needed for safe	Analysis (pg30-31)

	solution referenced to the client satellite orbit position and velocity.	approach and docking.	
PR.1.2	The payload shall establish an initial rendezvous hold outside a radial envelope of 100 m of the client.	Creates time to verify relative navigation before closing.	Analysis (pg34)
PR.1.3	The payload shall dock with a client satellite to create a sealed propellant transfer path.	Enables propellant transfer.	Demonstration (pg24,33)
PR.1.4	The payload shall extend an articulated arm to engage the client refueling port.	Provides mechanical alignment without slewing the bus.	Demonstration (pg23-25)
PR.1.5	The payload arm reach shall be at least 100 cm beyond the payload structure envelope.	Ensures reach to the client interface.	Demonstration (pg24)
PR.1.6	After disengagement, the payload arm shall return to a defined stowed position and latch.	Reduces collision risk and eases thermal control.	Demonstration (pg23-24)
PR.1.7	The payload shall transfer from 3.0 kg to 5.0 kg of hydrazine per refueling operation.	Meets the servicing objective.	Analysis (pg33)
PR.1.8	The payload shall not draw more than 222 W peak from the host	Protects the host power system.	Analysis (pg34)

	primary bus at any time.		
PR.1.9	All fuel transfer equipment shall fit entirely within the allocated payload envelope when stowed.	Ensures safe packaging and launch integration.	Inspection (pg24)
PR.1.10	Components that contain hydrazine shall be wrapped in multilayer insulation with fire retardant backing.	Limits radiative heating and adds a safety barrier.	Inspection (pg24,32)
PR.1.11	The payload shall provide telemetry for temperatures, pressures, flows, and valve states at at least 1 Hz.	Enables control and health monitoring.	Analysis (pg27-28)
PR.2.1	The primary structure shall survive Minotaur I quasi static, random vibration, acoustic, and pyroshock environments with ultimate factor of safety at least 1.40.	Ensures launch survivability with accepted margins.	Stress Analysis, Demonstration (pg24)
PR.2.2	With the payload stowed, the axial mode shall be at least 120 Hz and the lateral mode shall be at least 60 Hz.	Avoids dynamic coupling with launcher inputs.	Analysis (pg23-25)
PR.2.3	The payload interface plane planarity shall be within + or - 0.25 mm.	Preserves alignment at the mount.	Analysis (pg23,25)

PR.2.4	Materials and processes in wetted or adjacent areas shall be hydrazine compatible and shall meet ASTM E595 with total mass loss less than 1%	Prevents chemical damage and contamination.	Analysis (pg23-24)
PR.2.5	Under a 1 kN limit load the payload mount deflection normal to the interface shall be at most 0.25 mm.	Maintains alignment under load.	Analysis (pg25)
PR.3.1	Payload peak power draw during solar refueling shall be at most 219 W.	Prevents host power trips.	Analysis, Inspection (pg34,35)
PR.3.2	Cumulative campaign charge draw shall be at most 10.2 Ah with one second cadence counters and checksum protection.	To prevent fully draining the battery.	Analysis (pg 34)
PR.3.3	Payload input voltage tolerance shall be 28 VDC.	Guarantees reliable operation during noise(voltage alternating).	Analysis, Inspection (pg34-35)
PR.3.4	Payload peak power draw during Idle solar mode shall be at most 35.65 W.	Preserves power for charging to survive later eclipse.	Analysis, Inspection (pg35-37)
PR.3.5	Payload peak power draw during solar refueling shall be at most 138.7 W.	Preserves battery to survive current eclipse.	Analysis, Inspection (pg35-37)

PR.4.1	The payload controller shall execute refueling sequences autonomously and report state to the bus at at least 1 Hz.	Maintains safe deterministic operation.	Analysis (pg 27)
PR.4.2	The payload shall maintain an event and telemetry log covering at least 48 hours.	Allows reconstruction across missed passes.	Analysis (pg 28)
PR.4.3	The payload command interface shall process bus commands at at least 10 per second	Ensures timely control and feedback.	Inspection (pg 27-29)
PR.4.4	An onboard clock shall support time tagging with drift at most 1 second per day over 48 hours without ground sync.	Maintains event timing across outages.	Analysis, Inspection (pg 28-29)
PR.4.5	The payload shall enter a payload safe mode within 5 seconds upon failure and shall send the fault code.	Ensures prompt containment and clear reporting.	Analysis (pg 27-28)
PR.5.1	The payload thermal control shall be passive primary using MLI and coatings with no dedicated fluid loop, and if survival heaters are used.	Minimize mass and power while preserving cold case survivability.	Analysis (pg 32)
PR.5.2	The hydrazine tank temperature shall be maintained from 7 to 49 C in operation and	Prevent freezing and overheating of propellant.	Inspection (pg 32)

	within 0 to 52 C for survival.		
PR.5.3	The valve interface temperature shall be maintained from minus 7 to 55 C in operation and within minus 40 to 60 C for survival.	Protect seals from icing and thermal distortion.	Inspection (pg 32)
PR.5.4	The magnetic soft capture ring temperature shall be maintained from minus 10 to 50 C in operation and within minus 20 to 60 C for survival.	Preserve alignment performance and magnet strength.	Inspection (pg 32)
PR.5.5	The thermal design shall reject at least 30 W of payload waste heat at a sink temperature.	Prevent over temperature in sunlight hot case.	Analysis, Inspection (pg 33)

IV.Initial Concepts & Trade Study Down-select

The following are early concepts that were developed for use to meet our mission statement and requirements.

Concept 1: Prometheus Compact Robotic Refueler

The first proposed design concept is a Compact Robotic Refueler. Pictured in figure 1 it is an autonomous payload capable of executing a full satellite refueling sequence using a combination of robotic precision and modular interface technology. The payload consists of a foldable robotic arm with soft-capture grappling claws, inspired by the SPIDER robotic arm used in NASA's OSAM-1 mission and the claw-like grappling mechanisms deployed in Northrop Grumman's MEV (Mission Extension Vehicle) [10][11]. These manipulators allow gentle contact and secure grasping of a satellite without damaging fragile components, even in slight misalignment scenarios. The refueler is designed to work with the standard fuel ports already found on many satellites, commonly known as fill-and-drain valves (FDVs). These valves are

typically used during ground fueling before launching. The robotic arm on the payload is equipped with tools that gently fold back or adjust the satellite's insulation layers, known as multi-layer insulation (MLI). Once the valve is exposed, a small nozzle on the payload aligns and connects to it with high precision. The fuel is then transferred from a pressurized hydrazine tank on board, while built-in sensors monitor flow rate and pressure in real-time to make sure everything runs smoothly. To reduce risk, a self-sealing magnetic valve helps prevent leaks and makes it possible to perform multiple refueling operations during the mission.[12]

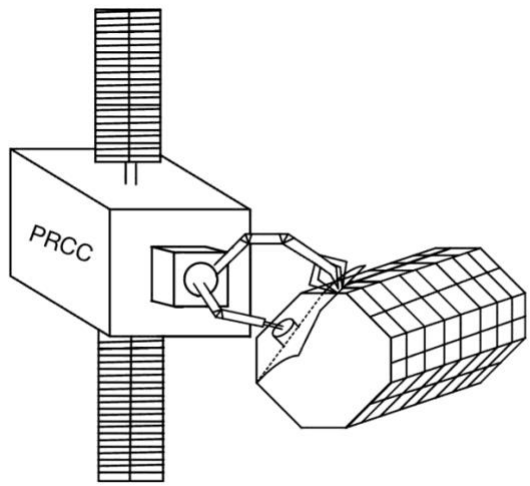

Figure 1. Prometheus Compact Robotic Refueler

Concept 2: Prometheus Quick Connect (PQC) Interface

Small hydrazine spacecraft today depend on fill-and-drain valves (FDV), such as the VACCO half- to one-quarter-inch poppet family, which provide triple metal seals and external leakage below 1×10^{-6} sccs at 20-24 bar blowdown pressure [13]. Orbit Fab's proprietary RAFTI interface updates that by adding an octagonal grapple rim and dual poppets for bidirectional flow [14], but it ties users to a licensed geometry. NASA's SUMO/FREND tests showed that an eight-pole magnetic ring can settle a chaser on a target within ±2 mm and ±1° at closing speeds under 0.03 m/s [15], while the OSAM-1 robotic tool suite demonstrated blanket cutting, cap removal, and hydrazine transfer on non-cooperative satellites [16]. Prometheus Quick Connect (PQC) merges these lessons into an open standard interface and is visualized in figure 2. It is a compact aluminum puck that follows the familiar pattern used by FDV valves, so integrators can drop it into the same panel opening without a tank redesign. Internally it retains the metal seat poppet and the typical hydrazine operating pressure band found in FDVs [17]. Externally a bayonet twist lock replaces the old threaded nut: the servicer's magnetic ring centers

the valve, a short twist engages the poppets, and two concentric magnetic pins report a "mated/demated."

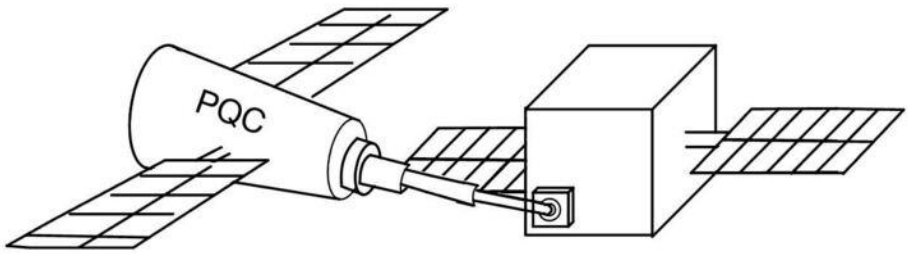

Figure 2. Prometheus Quick Connect (PQC) Interface

Concept 3: Prometheus SPHERE

Concept 3 for the Prometheus I mission is comprised of a main body and several pods that would detach from the payload and seen in figure 3. These pods would be responsible for delivering the fuel to the target as opposed to the entire body of the payload connecting. This design is inspired by the NASA SPHERES initiative [18], where NASA tested autonomous drones' ability to act independently, maneuver, interact, and hold liquid through the SLOSH investigation [19]. The main payload would approach its target in low earth orbit, at which point the spheres would detach from the main payload and maneuver over to the target. The sphere would then connect to the fuel port and deliver its entire contents to the target. This concept is largely different than others because of its decentralized execution. The transfer occurs separately from the main payload and encompasses several independently autonomous drones. The Prometheus SPHERE would satisfy the top-level requirements by refilling the desired target while maintaining low earth orbit, extending its lifespan at a diminished cost.

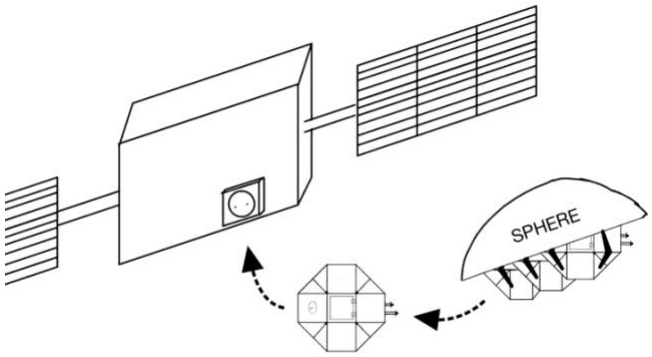

Figure 3. Prometheus SPHERE

To decide which one of these ideas best fit the mission's intent and values the team created a trade study tailored for the purpose of the Prometheus 1 mission and is seen in Table 3.

Table 3. Down select trade study qualities

	1	2	3			
Complexity: Autonomous 20%	More than 4 moving parts needed to communicate with each other for interaction.	2-3 moving parts needed to communicate for interaction	One or less moving part needs to comminicate			
				1	2	3
Cost 15%	Estimated over 2 billion.	Estimated between 1 billion & 2 billion.	Estimated under 1 billion.	Good	Better	Best
Maturity 10%	All completely new ideas. No basis in previous expirements.	Inconperates new uses and technology with proven concepts.	Majority of the system has been tested before but technology is used in new ways.			
Safety: Risk 25%	High opportunity for combustion or failure of the systems. Pressure could comprismise mission	Modererate opportunity for combustion. Systems are not put in high risk positions.	Low opportunity for combustion. Systems are safe from exposure.			
Adaptability 20%	Designed to only interact with one type of satalite.	Can interact with multiple kinds of satallites.	Can interact with any kind of satallite.			
Controls 10%	Needs greater than two complex controls system	Needs two complex controls system	Needs less one or less complex control system			

In this table, ideas that least matched with the teams' priorities ranked as a 1 and the most as a 3. Weights were assigned to each category in the far-left box of Table 3 to ensure that the categories that were valued more had a greater weight on the decision. The largest categories, like safety and adaptability, were chosen because they were considered the most important to the fulfillment of the mission objectives. Lower categories were seen as less critical or more easily overcome in the mission. To calculate the final preference equation, the weights of each score were used to create equation 1.

$$0.2(Complexity{:}\,Autonomous) + 0.15(Cost) + 0.1(Maturity) + 0.25(Safety{:}\,Risk) + 0.2(Adaptability) + 0.1(Controls) = Preference\ equation \quad 1$$

This equation accounts for the weight given to each category and the score of that category for each proposed idea. The results of that can be seen in the final row of Table 4.

Table 4. Down select trade study results

	Compact Robotic Refuler	Prometheus Quick Connect Interface (PQC)	Prometheus SPHERE
Complexity: Autonomous 20%	2	3	1
Cost 15%	1	3	3
Maturity 10%	2	2	2
Safety: Risk 25%	1	2	2
Adaptability 20%	3	1	1
Controls 10%	1	3	2
Prefrence equation calculation	1.7	2.25	1.75

It was found that according to the teams' own criteria and mission priorities, the PQC was 77.78% better than the next option. This creates a clear decision to select concept 2, the PQC, as the best design going forward.

V. Mission Architecture and CONOPS

The Prometheus quick connect (PQC) will be carrying out a four year mission where it will carry out the Prometheus I mission which is depicted in figure 4.

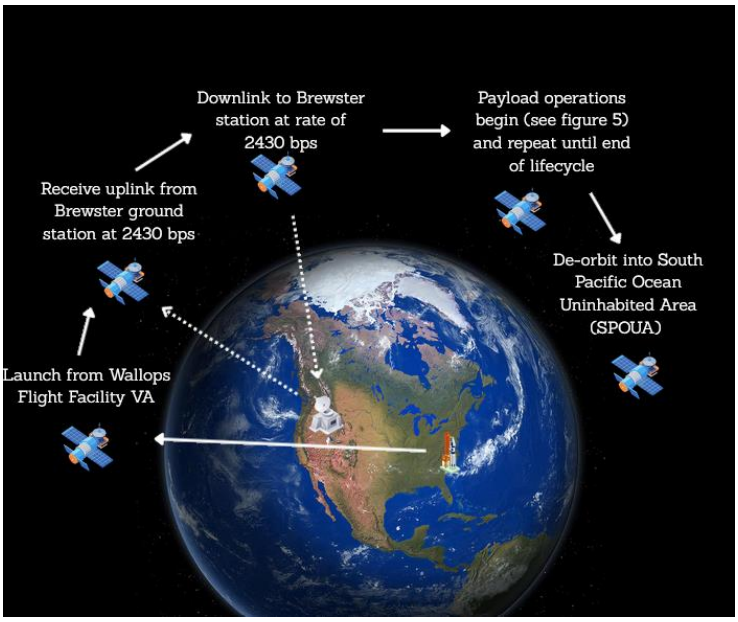

Figure 4. Mission Architecture

The Prometheus I mission begins at the Wallops Island NASA facility which allows for the easiest access to the operation inclination of the mission as well as the Minotaur I rocket. The inclination range of 50-60 degrees focused on 55 degrees was chosen based on the current operating range of satellites that will benefit from this mission. During launch the structure will undergo large amounts of vibration, acoustic, and acceleration stress. To minimize the effects of these forces while maintaining both light and strong the payload is made of carbon fiber T700 which has been proven to mitigate frequency-based disturbances. The high tensile strength gives the payload strong integrity to survive the 4 year mission, which is the expected time frame to deliver the full contents of the PQC's tank to various targets. During takeoff the payload will be exposed to high heats and then contrastingly freezing temperatures in space. Carbon fiber is also the best choice to deal with the hostile environmental phases of space travel. With a low thermal conductivity, the payload will not overheat during liftoff as well as aiding in the insulation of critical systems in freezing space.

Once in orbit the payload will begin its communication period by getting uplinks from the Brewster ground station. This station will send small amounts of data that will instruct the payload on the target for it to refuel. Once the payload revives this signal it will disperse the signals to the Nanomind A3200 data control in the payload. This will then send the necessary information to the subsystems activating them to orient towards the target and begins the operations cycle in figure 5. The target in question is running how on hydrazine fuel. This fuel is a crucial part in satellites continuing their mission as it allows them to make adjustment to avoid contacts and maintain orbit. Without this fuel the satellites service life will end and require replacement. The second slide shows the beginning of the action portion of the PQC. This is where the telescoping arm extends to gain access to the collaborative interface on the satellite as seen in slide 2 of figure 5. Due to the 0-gravity environment the PQC will not naturally guide to target and will utilize the balanced suite of GNC to make precision movements to the interface. The PQC will then use its magnetic locking mechanism to latch on to the interface and once the seal is confirmed the fuel will begin to transfer from the payload to the target. As this happens updates about successful locking, fuel transfer data will be collected by the subsystems and stored in the Nanomind A3200. The amount of fuel transferred will depend on conditions and volume of specific targets but its predicted to range between 3 and 5kg. At the next pass through the data window the shored information will be downlinked back down to the Brewster station. During the operation the lack of gravity also requires a mechanical delivery system to induce movement of fluid. A vane based propellent management device (PMD) will move the fluid into the arm of the PQC [20]. Here a piston will drive the fuel up the arm and into the target satellite. The expected rate of fuel transfer is between 1 and 1.3 kg/min [5]. Once the targeted satellite is refueled the magnetic lock will disconnect and the telescoping arm will retract back and the PQC will continue with its mission to refuel additional targets until the reserves of the PQC have been depleted. At this point the final uplink will be delivered to the PQC and the systems will be commanded to use the last of its fuel to push it into a deorbit to the South Pacific Ocean Uninhabited Area (SPOUA). At this point roughly 80% of the satellites will have burned up on deorbit and the remaining contents will be disposed of according to NASA deorbit standards. [21]

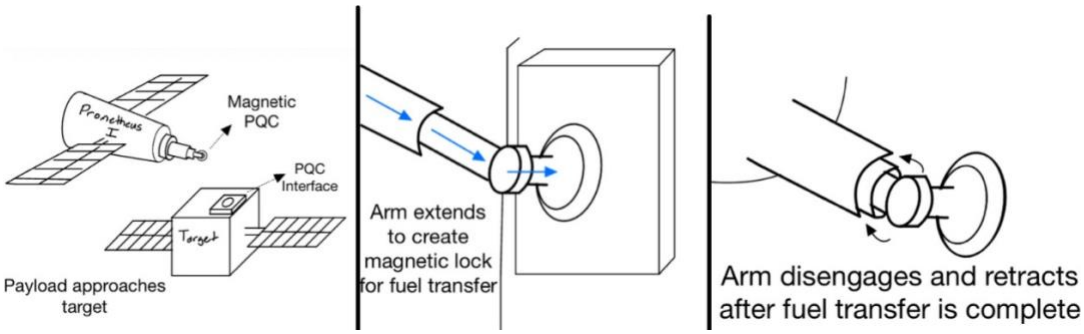

Figure 5. PQC operation phase

VI.Preliminary design

Prometheus I is a fueling payload that's hosted on the Blue Canyon X-Sat Venus class spacecraft that possesses approach, docking, controlled hydrazine transfer, and safe departure. This first design introduction is on hardware the team is actually developing and integrating, with the infrastructure they're using that's currently available such as launch vehicle, standard range assets, and baseline ground facilities being considered as givens. The payload is housed inside the Venus envelope and makes use of the bus for power, C&DH, communications, and attitude control using standard mechanical and electrical interfaces.

The three team designed elements form the basis of the design. Initially, a rectangular propellant tank made of titanium Ti-6Al-4V 52 by 41 by 14 centimeters in dimensions, with a constant wall, provides the mission with 30 kg of propellant volume in the payload bay to refuel clients. It had internal piston to push the fuel to to the second team designed element. Which is, a three piece foldable refueling arm made from Aluminum 7075 located above the tank, deploys to position the docking head for soft capture, and is stiff during transfer. The arm geometry and actuation meet contact alignment and load requirements and are scaled to Venus attachment points and ascent conditions. Third, the Prometheus Quick Connect is a bayonet type, magnetic connector that provides self centering capture, sealing, and a leak tight fluid path. It can attach to typical fill and drain valve geometries through a simple adaptor technique, making it easy to service legacy customers without ports installed. Power management and heating are integrated into host functions. Heavy draw tasks such as arm actuation and pumping are scheduled during day, and store and forward commanding and telemetry keep average power within daily boundaries. Thermal design protects the tank, valve interface and capture ring, arm actuators, and avionics using multilayer insulation, conductive paths to radiators, surface finishes, and localized survival heaters where required. Seal and propellant temperature ranges are defined, and thermal vacuum testing will also be used to model comparison and verify heater duty cycles. Volume, mass, and power of data are tracked against the Venus limits, and margins are held at component and payload levels.

This overview places the early design in perspective for the tank, folding arm, magnetic connector, and associated fluid, guidance, avionics, power, and thermal integrations. The following detailed subsystem descriptions further detail each of these with analyses, models, budgets, and test plans within the confines of the Venus spacecraft.

Launch Vehicle

The launch vehicle is responsible for carrying the payload from earth out of the atmosphere. This is critical to do safely so that the payload remains intact and able to carry out its intended purpose. The launch must also be coordinated with FAA permits and regulations. To choose the correct launch vehicle the team did a trade study which is seen in Table 5. This weighs the values of the team against the qualities of each vehicle in order to select the option which best matches the mission.

Table 5. Launch vehicle trade study

	Falcon 9	Minotaur I	Delta II
Cost 20%	69.85 mil	40 mil	51 mil
Launch Site 15%	30.5	107	116.5
Payload Capability 30%	3	3	3
Reliability 35%	100 (Only 2 launches)	100	98.8

The team identified launch site options as the least import factor for the launch vehicles choosing. To determine the value seen in Table 5 the team added the total range of possible inclinations for all possible launch sites for that particular vehicle. This was identified as the least because although it would give the payload access to aid a greater range of targets the expected service range is only 10 degrees and covered by all three vehicles. Cost was identified as second least, this is because although budgeting is important the effectiveness of the mission outweighs that concern. Payload capability was the vehicles' ability to hold the maximum possible payload as set out by the COSMIC challenge. For this, all three payloads were able to hold the maximum amount. Lastly reliability is critical because failure on the launch pad is an irreversible and catastrophic failure, ending any possibility of aid for the mission. The values for this table was found using the SMAD [22] and the user guides for the Falcon 9 [23], Delta II [24], and Minotaur I [25]. The values for this trade study were then evaluated using equation 2

$$score = \frac{value - \min(value)}{\max(value) - \min(value)} \qquad 2$$

This gives a normalized value to properly compare scores against each other. The results of the normalized values are seen in Table 6.

Table 6. Normalized values for launch vehicle trade study

Normalized values	Falcon 9	Minotaur I	Delta II
Cost (Min) 20%	0	1	.6315
Launch site (Max) 15%	0	.8895	1
Payload capability 30%	1	1	1
Reliability (Max) 35%	1	1	0
Score	.65	.9834	.5763

This trade study shows that the best choice for launch vehicle is the Minotaur 1 by Northrop Grumman. To determine the best launch site between Vanderburg Air Force Base and Wallops Flight Facility the team looked at which site had the easiest access to the target

inclination of 55 degrees and thus required the least delta V to orient itself to path. This was the Wallops Flight Facility.

Structure

The structure of the payload encompasses the physical creation and layout of the payload as well as the material that is used to create that material. The structure is responsible for making sure that the payload will withstand all expected loads and forces during its entire service life. The beginning of that is choosing the material which were chosen using the trade study shown in Table 7.

Table 7. Structure material trade study

Material	Carbon fiber T700	Aluminum Alloy 7075	Titanium alloy Ti6Al7Nb
Tensile Strength 25%	4900 GPa	570MPa	1000 MPa
Elastic Modulus 35%	230GPa	71.7 Gpa	113.8Gpa
Thermal conductivity 10%	20 W/(k*m)	130 W/(m*k)	7.2 W/(m*k)
Density 30%	1.6 g/cm^3	2.81 g/cm^3)	4.42 g/cm^3

The four qualities that we tested against were the tensile strength, elastic modulus, thermal conductivity, and density. This data was collected using the AZO material database [26]. These qualities were determined to be the most relevant to the expected operation of the Prometheus I mission. Tensile strength and density would determine the weight of the structure as material with less strength requires more reinforcement and the density of that material would determine the weight per amount used. Density was weighted at 30% to be able to maximize the size of the fuel tank used on the payload which would increase its effectiveness. Tensile strength was weighed at 25% due to the need to survive the lateral acceleration. Often more difficult for payloads to pass lateral acceleration is the frequency-based disturbances such as acoustic, and vibration. Having a high elastic modulus means that the material is stiffer and reduces the amplitude of natural frequencies such as these [27]. Lastly was the rational for thermal conductivity. The team wanted a material that would have low thermal conductivity to act as a barrier to decrease the speed of temperature changes in the highly volatile conditions of space launch and travel. This only makes up for 10% as the thermal system on the payload should be most responsible for this role. This resulted in the evaluation seen in Table 8

Table 8. Structure trade study evaluation

Normalized Value	Carbon fiber T700	Aluminum Alloy 7075	Titanium alloy Ti6Al7Nb
Tensile Strength 25% (High)	1	0	.0993
Elastic Modulus 35% (High)	1	0	.3623
Thermal Conductivity 10% (Low)	.8958	0	1
Density 30% (Low)	1	0.5092	0
Score	0.98658	0.15276	0.25163

The next phase of the materials systems was design and stress testing. The hydrazine tank is itself made of titanium Ti-6Al-4V to be best compatible with the fuel and fit standard practices. The CAD can be seen in figure 6 as well as the multiview layout of the payload when in its folded form in figure 7.

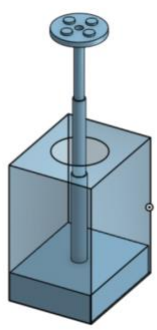

Figure 6. CAD design

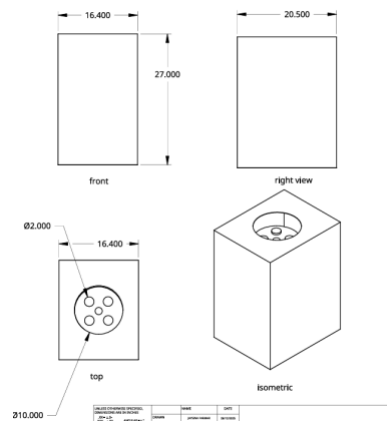

Figure 7 Payload layout

The structure shows that it is capable of fitting in the size requirements of the X-Class Venus bus. Additionally, to comply with standards the tank is wrapped with beta cloth. This flame retardant material increases the safety in a volatile environment. The most extreme loads that this design is expected to undergo are in the launch phase where we were able to get the data for lateral acceleration from the Minotaur I launch manual [25] seen in figure 8.

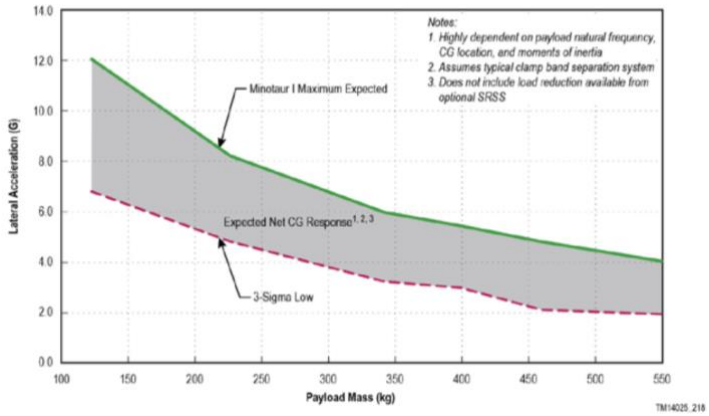

Figure 8. Lateral acceleration for Minotaur I rocket

Using this data the team was able to input similar conditions into the CAD program to show how the payload would react under load. Figure 9 shows the displacement magnitude, while figure 10 shows the Von Mises stress. This stress combines all expected loads into one profile.

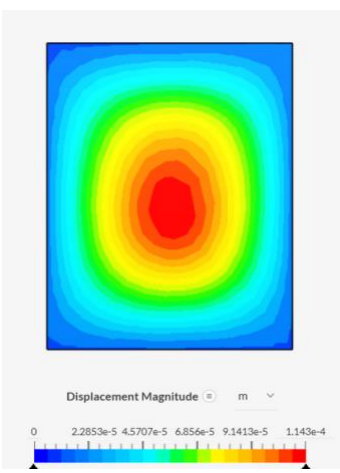

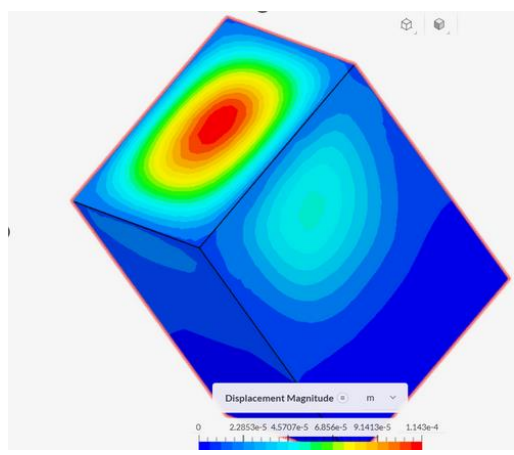

Figure 9. Displacement stress

Figure 10 Von Mises Stress

From this analysis we find that the payload will undergo an estimated force of 4.7kN resulting in a max displacement of 0.1143mm and max von misses stress of 9.16Mpa. The strength of the chosen material resulted in a safety factor of 535 and the total deflection being 0.025mm. These tests give the team high confidence of surviving takeoff.

Communications and Ground Station

Communications sets the basis for all directions and data between ground and the payload. These will direct information about location of target as well as receiving updates, progress, and sustainment data from the payload. Communications will primarily be sent through

an X-band frequency and antenna on the Venus bus. To determine the windows of communication the expected orbit of 55 degrees was input into STK (systems tool kit) and displayed the path seen in figure 11.

Figure 11.STK orbit path

On the right side of figure 11 the path along the United States is shown. Ground stations along this path would have the longest interaction cross section with the mission while in orbit giving it the most amount of time to up and downlink data. By inputting those locations and their range into STK generated tables of the times and duration that these stations would be able to transfer data between them. Data from the first 12 passes of the Brewster ground station can be seen in Table 9.

Table 9. Brewster ground station access data

Access	Start Time (UTCG)	Stop Time (UTCG)	Duration (min)
1	28 Jul 2025 16:14:15.714	28 Jul 2025 16:27:42.427	13.445
2	28 Jul 2025 17:55:31.587	28 Jul 2025 18:08:53.122	13.359
3	28 Jul 2025 19:36:27.235	28 Jul 2025 19:49:58.458	13.520
4	28 Jul 2025 21:17:20.733	28 Jul 2025 21:29:37.006	12.271
5	28 Jul 2025 23:00:55.848	28 Jul 2025 23:04:42.197	3.772
6	29 Jul 2025 13:04:38.558	29 Jul 2025 13:16:41.849	12.055
7	29 Jul 2025 14:44:07.303	29 Jul 2025 14:57:37.763	13.508
8	29 Jul 2025 16:25:09.565	29 Jul 2025 16:38:31.849	13.371
9	29 Jul 2025 18:06:21.642	29 Jul 2025 18:19:47.304	13.428
10	29 Jul 2025 19:47:11.283	29 Jul 2025 20:00:35.239	13.399
11	29 Jul 2025 21:28:20.487	29 Jul 2025 21:39:23.827	11.056
12	30 Jul 2025 11:37:37.771	30 Jul 2025 11:45:29.305	7.859

This data shows a pattern that gave the team ability to get the maximum and minimum windows of interaction. Using this data and the information about the station's antenna collected from copper development association [28] the LINK budget for uplink and downlink could be created. This shows the tolerance of data that could be transferred and confirmed adequate data margin for the purpose of the Prometheus I mission and can be seen in Table 10 for uplink and 12 for downlink.

Table 10. Uplink budget

Freq.	f	Ghz	input	7.00
Xmtr Pwr	P	W.	input	1.0000
Xmtr Pwr	P	dbW	10 log(P)	0.00
Xmtr line loss	L_l	dB	input	-1.00
Xmtr Ant. Beamwidth	θ_t	deg	Eq. (13-19)	0.857
Peak Xmt. Ant. Gain	G_{pt}	dB	Eq. (13-20)	45.64
Xmt. Ant. Diam.	D_t	m	input	3.50
Xmt. Ant. Pointing Error	e_t	deg	input	0.10
Xmt. Ant. Pointing Loss	L_{pt}	dB	Eq. (13-21)	-0.16
Xmt Ant. Gain	G_t	dB	$G_{pt}+L_{pt}$	45.48
EIRP	EIRP	dB	$P+L_l+G_t$	44.48
Prop. Path Length	S	km	input	7.000E+02
Space Loss	L_s	dB	Eq. (13-23a)	-166.25
Prop. & Polariz. Loss	L_a	dB	Fig. 13-10	-0.10
Rcv. Ant. Diam.	D_r	m	input	0.10
Peak Rcv. Ant. Gain	G_{rp}	dB	Eq. (13-18a)	14.72
Rcv. Ant. Beamwidth	θ_r	deg	Eq. (13-19)	30.00
Rcv. Ant. Pointing Error	e_r	deg	input	1.00
Rcv. Ant. Pointing Loss	L_{pr}	dB	Eq. (13-21)	-0.01
Rcv. Ant. Gain	G_r	dB	$G_{rp}+L_{pr}$	14.70
System Noise Temp.	T_s	K	input (using Tal	135.00
Data Rate	R	bps	input	2430.00
Est. E_b/N_o (1)	E_b/N_o	dB	Eq. (13-13)	66.27
Bit Error Rate	BER	--	input	1.0E-05
Rqd. E_b/N_o (2)		dB	Fig. 13-9 (BPSK	4.50
Implementation Loss (3)		dB	input (standard	2.00
Margin		***dB***	***(1)-(2)+(3)***	***63.77***

Table 11. Downlink budget

Freq.	f	Ghz	input	7.00
Xmtr Pwr	P	W.	input	0.0100
Xmtr Pwr	P	dbW	10 log(P)	-20.00
Xmtr line loss	L_l	dB	input	-0.50
Xmtr Ant. Beamwidth	θ_t	deg	Eq. (13-19)	30.000
Peak Xmt. Ant. Gain	G_{pt}	dB	Eq. (13-20)	14.76
Xmt. Ant. Diam.	D_t	m	input	0.10
Xmt. Ant. Pointing Error	e_t	deg	input	1.00
Xmt. Ant. Pointing Loss	L_{pt}	dB	Eq. (13-21)	-0.01
Xmt Ant. Gain	G_t	dB	$G_{pt}+L_{pt}$	14.74
EIRP	EIRP	dB	$P+L_l+G_t$	-5.76
Prop. Path Length	S	km	input	7.000E+02
Space Loss	L_s	dB	Eq. (13-23a)	-166.25
Prop. & Polariz. Loss	L_a	dB	Fig. 13-10	-0.10
Rcv. Ant. Diam.	D_r	m	input	3.50
Peak Rcv. Ant. Gain	G_{rp}	dB	Eq. (13-18a)	45.60
Rcv. Ant. Beamwidth	θ_r	deg	Eq. (13-19)	0.86
Rcv. Ant. Pointing Error	e_r	deg	input	0.10
Rcv. Ant. Pointing Loss	L_{pr}	dB	Eq. (13-21)	-0.16
Rcv. Ant. Gain	G_r	dB	$G_{rp}+L_{pr}$	45.43
System Noise Temp.	T_s	K	input (using Tal	135.00
Data Rate	R	bps	input	2430.00
Est. E_b/N_o (1)	E_b/N_o	dB	Eq. (13-13)	46.77
Bit Error Rate	BER	--	input	1.0E-05
Rqd. E_b/N_o (2)		dB	Fig. 13-9 (BPSK	4.50
Implementation Loss (3)		dB	input (standard	2.00
Margin		***dB***	***(1)-(2)+(3)***	***44.27***

The highest data margin of the three evaluated stations was the Brewster ground station, making it the most effective choice.

Command and data handling

The Command and Data Handling (C&DH) subsystem for Prometheus I is responsible for interpreting ground commands, executing mission sequences, handling telemetry, and managing data from both onboard systems and the refueling payload. It enables semi-autonomous operation of the payload during periods when communication with the ground station is not possible and must runs on an independent clock from ground. This autonomy is supported by onboard logic and temporary data storage until the next downlink opportunity.

The four types of data handled by the system are housekeeping data, attitude data, payload/science data, and ground commands. These are generated and stored onboard based on their respective execution frequencies and bit sizes, as detailed in Table 12 [32].

Table 12. Daily Data Volume by Type

Data Type	Related Function (SMAD)		Execution Frequency (Hz)	Bits	Duration (s/day)	Total Volume (bits/day)	Volume (KB/day)
Housekeeping Data	Telemetry Processing		10.0	64	86,400	55,296,000	6750 KB
Altitude Data	Rate Gyro + Sun Sensor		10.0 + 1.0 = 11.0	64	86,400	60,544,000	7392 KB

Payload/Science Data	Simple Autonomy		1.0	64	86,400	5,529,600	675 KB
Commands	Command Processing		10.0	64	86,400	55,296,000	6750 KB

The total estimated daily data volume is approximately 21 MB. To ensure resilience in case of missed ground station passes or downlink delays, the system includes a storage buffer of at least two days. Therefore, the onboard non-volatile memory must support between 40 MB and 50 MB of storage capacity.

To meet the subsystem's processing demands, the estimated computational load was calculated based on instruction throughput, code space, and data usage. These estimates are shown in Table 13.

Table 13. C&DH Subsystem Processing and Memory Requirements

Function	Code (Kwords)		Data (Kwords)	Throughput (KIPS)	Frequency (Hz)
Telemetry Processing	1.0		2.5	3.0	10.0
Command Processing	1.0		4.0	7.0	10.0
Simple Autonomy	2.0		1.0	1.0	1.0
Sun Sensor (Attitude)	0.5		0.1	1.0	1.0

The total processing requirement for the C&DH subsystem was calculated to be 12 KIPS, or thousand instructions per second. This was obtained by summing the individual throughput needs of the four core functions:

$$Total\ Throughput = 3\ (telemetry) + 7\ (command) + 1\ (autonomy) + 1\ (attitude) = 12\ KIPS \quad 3$$

Memory requirements were estimated using instruction word sizes, with each word assumed to be 2 bytes. The code memory was calculated as:

$$Code\ Memory = (1.0 + 1.0 + 2.0 + 0.5) Kwords \times 2 \frac{bytes}{word} = 4.5\ Kwords \times 2 = 9\ KB \quad 4$$

The data memory was similarly estimated:

$$Data\ Memory = (2.5 + 4.0 + 1.0 + 0.1)Kwords \times 2\frac{bytes}{word}$$
$$= 7.6\ Kwords \times 2 = 15\ KB \qquad 5$$

To ensure sufficient margin for robustness and future updates, both code and data memory were rounded up to 32 kilobytes each. This results in a total onboard memory requirement of 64 kilobytes for the selected flight computer.

To support these requirements, a trade study was performed comparing three candidate flight computers: the CubeSat Kit FM430, the Nanomind A3200 System, and the Raspberry Pi CM4 [29-31]. Each was assessed based on five key metrics: processing capability, memory capacity, power usage, radiation tolerance, and spaceflight heritage. This evaluation is summarized in Table 14.

Table 14. Flight Computer Trade Study

Criteria	Weight (%)	Goal	CubeSat Kit FM430	Nanomind(A3200)	Raspberry Pi CM4
Flash Memory (KB)	10	Maximize	60	512	8192
Normalized			0.0000	0.0556	1.0000
Weighted Score			0.0000	0.0056	0.1000
RAM (KB)	30	Maximize	10	32,768	1,048,576
Normalized			0.0000	0.0312	1.0000
Weighted Score			0.0000	0.0094	0.3000
Non-volatile Storage (MB)	30	Maximize	2048	128	8192
Normalized			0.2381	0.0000	1.0000

Weighted Score			0.0714	0.0000	0.3000
Processing (KIPS)	20	Maximize	7,400	100,000	1,500,000
Normalized			0.0000	0.0620	1.0000
Weighted Score			0.0000	0.0124	0.2000
Clock / Timer (RTC)	10	Maximize	1	1	0
Normalized			1.0000	1.0000	0.0000
Weighted Score			0.1000	0.1000	0.0000

Total FOM	100	0.1714	0.1274	0.9000

The NanomindA3200 system was ultimately selected as the most appropriate option. While the Raspberry Pi CM4 offered high-end performance but it doesn't have onboard RTC. The FM430 was space-qualified but underpowered for the required instruction throughput. The NanomindA3200 provided the right balance of performance, robustness, and heritage, meeting all mission requirements and had minimal power consumption of 2.5W.

Due to the event-based nature of the mission, data is not downlinked continuously. Instead, information is collected during key events such as refueling operations and stored until a suitable ground station pass becomes available. Based on expected coverage from the Brewster ground station, the mission expects 4–5 downlink opportunities, making this strategy both viable and efficient.

GNC/ Attitude

The guidance navigation controls (GNC) and attitude systems allow for the payload or orient itself near the target satellite and put it in a position for the PQC to be effective. The expectation of this system is to fit the predicted alignment window which is ±2 mm relative position and ±1° relative attitude at contact. The IDSS [33] and ECSS [34] both sets standards for each phase of docking that must be adhered to. The first of these is the approach phase which is considered from 10km to 1km the payload must be operating at a relative speed of less than

0.1 m/s to its target . At this point the GNC system will be using GPS and an internal measuring unit (IMU) As the payload gets withing 1km of each other the GPS and IMU system constraints are tightened where the uncertainty must not be outside of 1cm and 1 degree with the attitude sensors updating 5 times every second. This permits the payload to enter the capture and refuel phase where the ±2 mm relative position and ±1° relative attitude standard is met. During transfer anything outside of these tolerances are required to trigger an automatic shutoff.

To do this the payload will take advantage of couple of critical systems that are apart of GNC/Attitude. The first of which are the navigation sensors which is comprised of the GPS and internal measuring unit (IMU). These give relative location to the satellite and communicate with the other systems to make sure the payload is going in the right direction. The second are attitude sensors which track the orientation of the spacecraft in three-dimensional space. This can include gyroscopes to set normal and star trackers which take pictures of the surrounding sky and use reference images to accurately determine position [35]. Then actuators are the systems that physically create the force that make the adjustments. This consists of reaction wheel for stabilization and jitter suppression under 0.5 degrees. It will also use monoprop thrusters for translative movement.

These systems are sold and used as a single suite. Multiple suites are sold to cater to the different needs of different missions. To determine the best suite for this mission the trade study in Table 15 was used.

Table 1515. GNC/Atittude trade study

Equipment and Sensors	Weight	Full Precision Suite	Simplified Suite	Balanced Hybrid Suite
Accuracy	0.35	3 (best)	1 (fails tolerance)	2 (meets tolerance)
Mass and Power	0.25	1 (heaviest)	3 (lightest)	2 (moderate weight)
Cost and Integration Complexity	0.15	1 (costly)	3 (cheapest)	2 (moderate)
Autonomy and Reliability	0.25	2 (complex with multiple failing points)	2 (needs more ground control)	3 (redundancy, robust autonomy)

The full precision was evaluated at a score of 1.95, the simplified at a score of 2.05, and the hybrid at a score of 2.25. It is important to note that the simplified suite is entirely disqualified for not meeting the tolerance requirements of the mission. The trade study shows that the best choice is the hybrid suite and will be used for the mission because it meets all requirements without adding extra mass or power.

Thermal

The thermal subsystem provides environmental control for the PQC payload while and the BCT X-Sat Venus bus. It must keep critical hardware such as the hydrazine tank, magnetic soft capture ring, electronics, and sensors within their operating limits during all mission phases [36-37]. Secondly it must interface to the bus thermal interface and harness them to use for heater power. Each of the following systems have required operating limits that the thermal system must keep inside that range.

Key thermal requirements [38-40]:

- Maintain hydrazine tank within 7–49 °C
- Maintain valve interface between −7 and 55 ° C
- Maintain capture ring between −10 and 50 °C
- Provide temperature telemetry sampled ≥ 1 Hz, accuracy ≤ 0.5 °C for tank, valve, ring, and avionics.

Three architectures were compared using the decision-matrix method to compare thermal systems that use passively only, a hybrid passive and bus heaters, and a dedicated mini loop. The passive consists of MLI coatings, thermal straps and radiator couplings. Adding the bus heaters adds the systems from the X-Sat Venus Bus, and the mini loop adds a heat pump working with a dedicated heat controller. Criteria and weights are as follows: mass 0.20, power 0.20, reliability 0.30, integration complexity 0.20, cost 0.10. Scoring (0–1) was normalized and weighted resulting in scores of 0.88 for passive, 0.84 when the bus heaters are added and 0.605 for the active mini loop.

Although the passive has the best score the system did not meet the base level requirements and therefore the hybrid option is the best option to guarantee that all systems maintain above the minimum required temperatures. The hybrid suite will consist of MLI coating on non -radiating surfaces, heat baffling, and conductive thermal straps that bring heat from systems that naturally produce heat to the Venus buses interface points. The bus will provide some active components such as power for line heaters on the hydrazine tank, electronics, and the PQC interface. These will self-regulate using thermostat sensors which trigger reactions to direct heat to areas of need.

Because of the hybrid model some of the systems will require power. The power needed to keep steady temperature will also change based on position in the orbit cycle. To make sure the systems always have the needed power the team estimated power usage maximums during eclipse where it is the coldest as well as the payload has the least access to power. To monitor the thermal conditions of the payload thermistors will be placed at each of the critical points in the payload that are linked with the Nanomind A3200 data handling system and monitored at ≥ 1 Hz with sensor accuracy ≤ 0.5 C.

Propulsion subsystem

The propulsion subsystem enables Prometheus I to reach the desired orbit, rendezvous, station keep, and retreat on command. It must deliver promptly available thrust with predictable response during terminal operations. Purely electric options, would stretch burns from minutes into many hours or days and would be constrained to sunlight with continuous heater and power demands because of our limited Venus bus electrical limits of a single solar array at 222W and a 10.2 Ah battery [41][42][43]. That operational burden conflicts with tight approach windows and energy intensive activity in eclipse Must be avoided. Chemical propulsion remains the practical baseline because it provides immediate thrust with no to minimal electrical draw limited to valves, controls, and small heaters [44].

Four propellants were evaluated:

• Green monopropellant (LMP-103S). Flight proven AND based monopropellant with ~230–235 s Isp, lower handling hazards than hydrazine, and strong density impulse attractive for integration and safety [45][49].

• Bipropellant (MMH/NTO), ~4 N cluster. Higher Isp (~300–330 s) and fast burns but with added toxicity, dual-tank plumbing, and programmatic complexity [46].

• Green monopropellant ACS for terminal ops. Very high Isp (~1500 s) but extremely low thrust; practical only for slow phasing in sunlight, with chemical still needed for terminal approach [41][47].

• Cold gas (N_2), ~0.3 N. Simple and safe, but low Isp (~65–85 s) causes large propellant mass and long maneuver times [48][49].

Table 1616. Propulsion decision matrix

Criterion	Weight	Goal	Green Monoprop LMP-103S	Biprop MMH/NTO	Green ACS	Cold Gas N_2
Prop Mass for Δv [kg]	0.3	Min	10.088	7.463	4.291	33.934
Normalized Value			*0.8044*	*0.893*	*1*	*0*
Time to Execute Δv [hr]	0.2	Min	6.25	1.562	140.958	20.833
Normalized Value			*0.9664*	*1*	*0*	*0.8618*
Peak Power [W]	0.1	Min	80	50	200	10
Normalized Value			*0.6316*	*0.7895*	*0*	*1*
TRL (0–1)	0.1	Max	0.9	0.95	0.85	1
Normalized Value			*0.3333*	*0.6667*	*0*	*1*
Safety/Toxicity	0.1	Min	0.2	0.8	0.2	0
Normalized Value			*0.75*	*0*	*0.75*	*1*
Complexity (1-3)	0.1	Min	2	3	3	1
Normalized Value			*0.5*	*0*	*0*	*1*
Integration Fit (0–1)	0.05	Max	0.9	0.8	0.9	1
Normalized Value			*0.5*	*0*	*0.5*	*1*
Tankage Fraction (dry/prop)	0.05	Min	0.15	0.25	0.25	0.5
Normalized Value			*1*	*0.7143*	*0.7143*	*0*
Totals:	**1**		**0.73109**	**0.649235**	**0.435715**	**0.62236**

This led to the selection of green monopropellant (LMP-103S), 1 N thruster cluster. This option best balances responsiveness, safety, and integration burden. It executes commanded maneuvers in practical hours (not days), avoids the toxicity and plumbing complexity of Bipropellant, and carries lower power and operational coupling than an EP-centric solution. Its flight heritage and density-impulse advantage keep tank volumes and structural accommodations modest, simplifying bus integration and thermal control. In short, C1 delivers timely terminal thrust with acceptable mass and risk, which is exactly what a servicing mission needs to get reliably close enough to connect.

Not selected

- Bipropellant: excellent Isp and short burn times, but the added toxicity/complexity is not justified by our operational needs and program risk posture.
- Green ACS: outstanding propellant efficiency, yet multi-day burns and continuous power demands make it a poor primary actuator for terminal ops; viable only as a supplemental phasing aid.
- Nitrogen gas: simplicity and high TRL are attractive, but propellant mass and maneuver duration are prohibitive at the required performance level.

Power Subsystem

The power subsystem provides generation, storage, and regulated distribution of energy to the spacecraft bus and payload. For the Blue Canyon Technologies (BCT) X-SAT Venus Class Bus, the primary source is a deployable solar wing and the secondary source is a rechargeable Li-ion battery. BCT marketing materials list one-wing configurations at 222 W [50], while the X-SAT Venus Class datasheet cites onboard energy storage of 10.2 Ah [50]. This mission uses a 28 VDC main bus consistent with small spacecraft practice [50].

STK analysis showed an orbital period of 1 h 37 m 20 s with an eclipse duration of 34.411 min. Accordingly, the illumination interval is the remainder of the orbit. These geometry terms set the duty cycles for sunlight and eclipse and drive array sizing during illumination and battery sizing for eclipse as presented in the lecture [46].
Givens:

$$P_{array} = 222\,W \;\; \& \; Battery_{cap} = 10.2\,Ah[1] \qquad V_{MainBus} = \; 28\,VDC\;[50]$$

$$T = 1.622222\,h \quad T_e = 0.573517\,h \qquad T_i\; 1.048706\,h. \; -Table\;16$$

$$Load\ in\ sunlight\ P_i = 35.65\,W\ \&\ Load\ in\ eclipse\ P_e = \; 138.7\,W - \; Table\;17$$

Realistic Efficiency Model and Rationale

The day path efficiency to loads uses representative space qualified DC-DC converter and EPS values: $\eta_{MPPT} = 0.95$ and $\eta_{PDU} = 0.97$ from space grade converter datasheets [50], a conservative harness efficiency $\eta_{harness} \approx 0.98$, and Li-ion charge/discharge energy efficiencies $\eta_{chg} = \eta_{dis} = 0.95$ supported by NASA literature [50]. Thus, the composite daylight path is

$X_i = \; \eta_{MPPT} \cdot \eta_{harness} \cdot \eta_{PDU} = \; 0.903$, and the eclipse path including charge and discharge is $X_e \; = \; \eta_{MPPT} \cdot \eta_{harness} \cdot \eta_{chg} \cdot \eta_{dis} \cdot \eta_{PDU} = \; 0.815$. Solar-array area at EOL requires the EOL specific power p_{EOL}, which depends on cell technology, packaging factor, temperature and incidence angle [53][51]. Battery capacity from a target DOD requires a DOD limit, number of parallel strings N, and a chosen transmission efficiency $\eta_{xmission}$ (the lecture suggests 0.90) [52]. However, other data is not available online, no similar structure or missions.

1) Solar-array power during illumination

Equation: $P_{SA} \; = \dfrac{\frac{P_e T_e}{X_e} + \frac{P_i T_i}{X_i}}{T_i}$

$$Subtituite\ givens\ and\ Assumption\ efficiencies\ P_{SA} = \; 132.5\,W$$

2) Energy per orbit

Eclipse energy at loads:

$$E_{ecl} = \; P_e \; \cdot \; T_e \; = \; 138.7 \; \times \; 0.573517 \; = \; 79.55\,Wh$$

Battery energy delivered:

$$E_{bat,out} \; = \; \frac{E_{ecl}}{(\eta_{dis} \; \cdot \; \eta_{PDU})} = \; \frac{79.55}{(0.95\,.0.97)} = \; 86.32\,Wh$$

Energy required to charge back into the battery:

$$E_{bat,chg} = \frac{E_{bat,out}}{\eta_{chg}} = \frac{86.32}{0.95} = 90.87\ Wh$$

Array energy devoted to recharging during sun:

$$E_{array\ to\ bat} = \frac{E_{bat,chg}}{(\eta_{MPPT} \cdot \eta_{harness})} = \frac{90.87}{(0.95\ .\ 0.98)} = 97.60\ Wh$$

Sun load energy referred to array:

$$E_{sun\ load\ @array}, = (\frac{P_i}{X_i}) \cdot T_i = (\frac{35.65}{0.903}) \cdot 1.048706 = 41.40\ Wh$$

Array energy produced during sun:

$$E_{SA} = P_{SA} \cdot T_i = 222 \times 1.048706 = 232.81\ Wh$$

Per orbit energy margin in sunlight:

$$E_{margin} = E_{SA} - (E_{array} + E_{sun\ load\ @\ array}) = 232.81 - (97.60 + 41.40) = 93.81\ Wh$$

3) Battery capacity & DOD

$$E_{batt} = 10.2\ Ah \times 28\ V = 285.6\ Wh$$

$$DOD_{BOL} = \frac{E_{bat,out}}{E_{batt}} = \frac{86.32}{285.6} = 30.2\%$$

Planned EOL (80% capacity assumption) and DOD (EOL):

$$E_{batt,EOL} = 0.80 \times 285.6 = 228.5\ Wh$$

$$DOD_{EOL} = \frac{E_{bat,out}}{E_{batt,EOL}} = \frac{86.32}{228.5} = 37.8\%$$

$$C_{req} = \frac{P_e\ T_e}{V_{bus}\ N\ DOD\ \eta_{xmission}}$$

$$C_{req} = 8.35\ Ah$$

4) Charge power in sunlight

Average battery level charge power:

$$P_{chgbat} = \frac{E_{bat,chg}}{T_i} = \frac{90.87}{1.048706} = 86.65\ W$$

Array power to provide that:

$$P_{chg}@array = \frac{P_{chg@bat}}{\eta_{MPPT} \cdot \eta_{harness}} = 86.65 / (0.95 \cdot 0.98) = 93.07\ W$$

Equation (1) shows that the solar array must supply 132.5 W during illumination, and the installed 222 W wing exceeds this by about 90 W, so the array can both run the bus and recharge the battery in sun without stress. Equation (2) indicates a per orbit surplus of 93.8 Wh after covering sunlit loads and fully replacing eclipse energy. Practically, that surplus can accommodate additional sun only activity .Equation (3) shows that, with the efficiency assumptions used, the battery capacity needed to meet the eclipse draw is about 8.35 Ah, which is below the 10.2 Ah installed on the Venus- X-Sat class bus host. Finally, Equation (4) confirms that the battery fully recharges within each sunlit period: the array produces enough energy in illumination to restore the eclipse removal and still leave margin of 93.07 W, so state of charge returns to the required level every orbit.

Table 17. STK eclipse data

Satellite-PromI: Eclipse Times

Start Time (UTCG)	Stop Time (UTCG)	Duration (min)	Obstruction	Start Pass Number	Stop Pass Number	Current
12 Aug 2025 16:00:00.000	12 Aug 2025 16:07:42.854	7.714	Earth	1	1	Umbra
12 Aug 2025 16:07:42.854	12 Aug 2025 16:07:51.923	0.151	Earth	1	1	Penumbr
12 Aug 2025 17:09:52.705	12 Aug 2025 17:10:01.862	0.153	Earth	1	1	Penumbr
12 Aug 2025 17:10:01.862	12 Aug 2025 17:44:26.510	34.411	Earth	1	2	Umbra
12 Aug 2025 17:44:26.510	12 Aug 2025 17:44:35.562	0.151	Earth	2	2	Penumbr
12 Aug 2025 18:46:35.216	12 Aug 2025 18:46:44.357	0.152	Earth	2	2	Penumbr
12 Aug 2025 18:46:44.357	12 Aug 2025 19:21:10.144	34.430	Earth	2	3	Umbra
12 Aug 2025 19:21:10.144	12 Aug 2025 19:21:19.183	0.151	Earth	3	3	Penumbr
12 Aug 2025 20:23:17.717	12 Aug 2025 20:23:26.843	0.152	Earth	3	3	Penumbr
12 Aug 2025 20:23:26.843	12 Aug 2025 20:57:53.753	34.448	Earth	3	4	Umbra
12 Aug 2025 20:57:53.753	12 Aug 2025 20:58:02.778	0.150	Earth	4	4	Penumbr
12 Aug 2025 22:00:00.208	12 Aug 2025 22:00:09.320	0.152	Earth	4	4	Penumbr
12 Aug 2025 22:00:09.320	12 Aug 2025 22:34:37.345	34.467	Earth	4	5	Umbra
12 Aug 2025 22:34:37.345	12 Aug 2025 22:34:46.355	0.150	Earth	5	5	Penumbr
12 Aug 2025 23:36:42.688	12 Aug 2025 23:36:51.786	0.152	Earth	5	5	Penumbr

Table 1818. Power energy balance

Subsystem	% of average EPS	Rationale
Communications	10%	Idle TT&C; schedule high-rate downlinks in sunlight.
C&DH	3%	OBC, data handling, interfaces.
GNC	7%	Wheels idle + sensors
Thermal	25%	Line/tank heaters dominate in eclipse.
Structure & Mechanical (Refueling arm)	40%	Sensors/controls to transfer propellent to client.

Losses	5%	Conversion + heat.
Margin	10%	Errors and spikes.
Total	100%	

Power Budget

To estimate the power budget, we modeled three operating states for the payload: idle in sunlight, idle in eclipse, and refueling. The analysis showed a power shortfall if refueling is attempted during eclipse once heater duty and conversion losses are included, so we schedule all refueling only in sunlight to remove most thermal loads and align the transfer demand with array generation. Using the allocation in Table 19, we reserve ten percent of average EPS for communications, three percent for command and data handling, seven percent for guidance and navigation, twenty five percent for thermal control, forty percent for structure and mechanisms, five percent for losses, and ten percent for margin. Applying these allocations, and using power consumption data from similar missions for the subsystems resulted in the power profile seen in Table 19 which yields approximately 35.65 watts in idle sunlight, about 138.7 watts in idle eclipse where heaters dominate, and about 202.44 watts during refueling [54]. In the refueling case, the principal contributors are the arm at 79.89 watts [55][56] and the pump at 38.3 watts [57][58], with guidance and navigation at 22.55 watts [59][60] and command and data handling at 0.9 watts while communications is held at zero [61]. Concentrating refueling in sunlight maintains a positive energy balance, preserves thermal margins on the tank and seals without excessive heater duty, and keeps the total within bus capability [54][62].

Table 1919. Power budget

Subsystem	Sun (W)	Eclipse (W)	Refueling (W)
Communications	12.2	12.2	0
Bus C&DH	0.9	0.9	0.9
GNC	22.55	22.5	22.55
Thermal	0	43.2	0
Power	0	0	0
Propulsion	0	0	15
Structure & Mechanical (Arm)	0	0	79.89
Fluid Transfer (Pump)	0	0	38.3
Payload Thermal	0	59.9	59.9
Payload C&DH	0	0	0.9
Total	35.65	138.7	217.44

Mass Budget

To estimate mass budget, the team employed bottoms up current best estimate with error margins and explicit growth reserves, as mass tend to increase as designs mature and that projects must plan for both expected growth and unknown unknowns through contingency and margin. Structural and mechanism items therefore carry a ten percent margin, propellant is accounted for without margin, and a fixed allowance is taken for small payload subsystems as payload subsystems are made up almost entirely of small chips. Team-design components such as arm, propellent tank, PQC their masses were calculated $Mass = Density . Volume$, refer to the structure subsystem for dimensions and materials density. Under this approach, the payload current best estimate is 40.396 kg and the allocated payload mass after margins is 41.3856 kg as presented in Table 20. This approach sustains payload margin while keeping the integrated mass within the Venus X-Sat Class bus envelope and weight constraint, and it provides room for a disciplined baseline that will be capable of withstanding expected growth as mechanical design and vendor selections finalize.

Table 2020. Mass budget

Segment	**Item**	**Mass (kg)**	**Margin**	**Allocated (kg)**
Payload	Outer Structure Carbon Fiber 700	23,29	N/A	23.29
Payload	Hydrazine propellant	30	N/A	30
Payload	Tank	5.295	10%	5.8245
Payload	Arm structure	4.022	10%	4.4242
Payload	Prometheus Quick Connect	0.579	10%	0.6369
Payload	Propellant Pump	3	10%	3.3
Payload	Small subsystems margin (payload C&DH, sensors, valves, harness)	0.5	N/A	0.5
Total	Payload and its subsystems	66.686	N/A	67.6756

VII.Risk Mitigation

Prometheus I risk management is concentrated on the five operations and threats that loom over mission reliability. Through the use of a possibility x impact risk mitigation matrix, autonomy faults, docking failure, contact damage, eclipse power deficit, and orbital debris were chosen as the primary risks. Table 21 lists the separate mitigations to address those risks: manual take over and hard emergency stop for autonomy faults, speed limited step and check approach for docking, compliant soft bumper and rounded edges to reduce contact damage during docking, sunlight-only refueling rule to avoid eclipse power deficit, and continuous screening with always

on sensors to eradicate debris crashing accidents. These controls worked to transfer all of the risks from the red to green region in Table 22. It shows the expected movement in the matrix after these controls, with likelihood reduced for autonomy, docking, eclipse power, and debris, and consequence reduced for contact damage. This system explicitly connects risk reduction to design features and operations rules, and provides clear verification.

Table 2121. Risk Mitigation Matrix

Risk	Mitigation
1) Autonomous failure	Add manual control and an emergency stop. If comms or software freeze for 5 seconds, auto-halt and back away to a safe pose.
2) Docking failure	Cap approach speed at 1 cm/s and move in short steps with a pause to check alignment. If latch fails twice, back out and retry later using a manual input
3) Damage during docking	Put a soft bumper ring around the end effector and round all edges.
4) Power not enough during eclipse	Refuel only in sunlight
5) Hit debris	Update GNC and C&DH subsystem with commands to make the GNC and sensors to be alert and always on

Table 2222. Risk Matrix

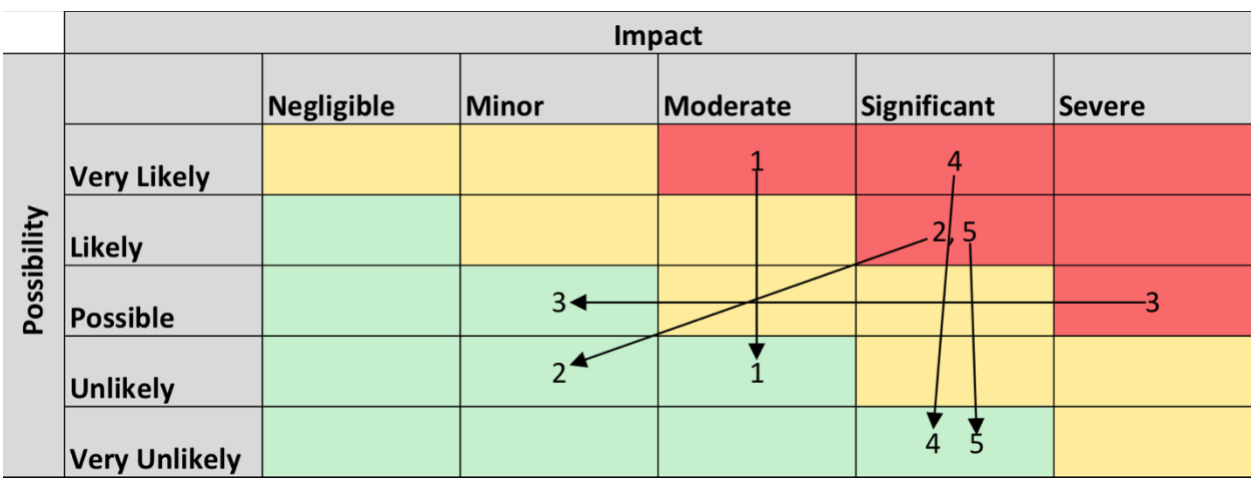

References

[1] Blue Canyon Technologies, "X-Sat Venus-Class SmallSat Platform Datasheet," 2025. [Online]. Available: https://bluecanyontech.com/wp-content/uploads/2025/01/X-Sat-Venus-Datasheet.pdf

[2] NASA, "On-Orbit Satellite Servicing Study: Project Report," Oct. 2010. [Online]. Available: https://www.nasa.gov/wp-content/uploads/2023/10/nasa-satellite-servicing-project-report-0511.pdf

[3] Orbit Fab, "RAFTI User Guide," DOC-00012 Rev A, Oct. 28, 2022. [Online]. Available: https://www.orbitfab.com/wp-content/uploads/DOC-00012-A_RAFTI_User_Guide.pdf

[4] U.S. Electrodynamics, Inc. (USEI), "Brewster Teleport," n.d. [Online]. Available: https://usei-teleport.com/brewster-teleport/

[5] NASA, "Update on Status of NASA's OSAM-1 Project," press release, Washington, DC, USA, Mar. 1, 2024. [Online]. Available: https://www.nasa.gov/missions/update-on-status-of-nasas-osam-1-project

[6] J. Steinhauser, "NASA to discontinue $2 billion satellite-servicing project on higher costs, schedule delays," Reuters, 1 Mar 2024. [Online]. Available: https://www.reuters.com/technology/space/nasa-discontinue-2-billion-satellite-servicing-project-higher-costs-schedule-2024-03-01/

[7] eoPortal, "IMS-1 (Indian Microsatellite-1)," 2025. [Online]. Available: https://www.eoportal.org/satellite-missions/ims-1

[8] NASA, "Robotic Refueling Mission (RRM): Overview," Dec 2024. [Online]. Available: https://www.nasa.gov/nexis/robotic-refueling-mission-3/

[9] D. Klingler, "Astronauts practice refueling spacecraft in orbit," Wired, 22 Mar 2012. [Online]. Available: https://www.wired.com/2012/03/spacecraft-refueling-iss/

[10]NASA, "On-orbit Servicing, Assembly and Manufacturing 1 (OSAM-1)," 2024. [Online]. Available: https://www.nasa.gov/mission/on-orbit-servicing-assembly-and-manufacturing-1/

[11] Northrop Grumman, "SpaceLogistics – Mission Extension Vehicle (MEV) Satellite Services," 2023. [Online]. Available: https://www.northropgrumman.com/space/space-logistics-services

[12]] National Aeronautics and Space Administration, "Lesson 915: Propellant Management for Geosynchronous Satellite," NASA Lessons Learned Information System, 2000. [Online]. Available: https://llis.nasa.gov/lesson/915

[13] Northrop Grumman, "SpaceLogistics – Mission Extension Vehicle (MEV) Satellite Services," 2023. [Online]. Available: https://www.northropgrumman.com/space/space-logistics-services

[14] Orbit Fab, RAFTI™ User Guide, Low-Pressure Version, DOC-00012-A, 2023. Available: https://www.orbitfab.com/wp-content/uploads/DOC-00012-A_RAFTI_User_Guide.pdf

[15] R. Welle et al., "The SUMO/FREND project: technology development for autonomous grapple of geosynchronous satellites," NRL Tech. Rep., 2006. Available: https://www.researchgate.net/publication/289481786

[16] NASA Goddard Space Flight Center, OSAM-1 Servicing Tool Trade Study, abstract released 2019. Available: https://ntrs.nasa.gov/api/citations/20190029370/downloads/OSAM1_Tool_Trade.pdf

[17] VACCO Industries, Fill and Drain Valve Series 800 Datasheet, 2023. Available: https://www.vacco.com/wp-content/uploads/Series800_FDV.pdf

[18] NASA, SPHERES Ground Support Package (GSP) User Guide (SPHERES-GSP1), June 2015. [Online]. Available: https://www.nasa.gov/wp-content/uploads/2015/06/spheres-gsp1.pdf

[19] NASA, Synchronized Position Hold, Engage, Reorient, Experimental Satellites (SPHERES) Fact Sheet, May 7, 2015. [Online]. Available: https://www.nasa.gov/wp-content/uploads/2017/12/spheres_fact_sheet-508-7may2015.pdf

[20] J. W. Hartwig, "A detailed historical review of propellant management devices for low gravity propellant acquisition," presented at the AIAA/SAE/ASEE Joint Propulsion Conference, Salt Lake City, UT, Jul. 25–27, 2016. [Online]. Available: https://ntrs.nasa.gov/api/citations/20170000667/downloads/20170000667.pdf

[21] "Deorbit Systems," *NASA SmallSat Institute: State-of-the-Art of Small Spacecraft Technology*, accessed Aug. 10, 2025. [Online]. Available: https://www.nasa.gov/smallsat-institute/sst-soa/deorbit-systems/

[22] "Table 26-7, Orbits Performance (mT)," *SME-SMAD: Space Mission Engineering – The New SMAD*, accessed Aug. 8, 2025. [Online]. Available: http://www.sme-smad.com/items/Table%2026-7.htm

[23] "Falcon 9," *SpaceX*, accessed Aug. 8, 2025. [Online]. Available: https://www.spacex.com/vehicles/falcon-9

[24] *Delta II Payload Planners Guide*, United Launch Alliance, Dec. 2006. [Online]. Available: https://www.ulalaunch.com/docs/default-source/rockets/deltaiipayloadplannersguide2007.pdf

[25] Northrop Grumman, “Minotaur I User’s Guide,” Rev. D, Minotaur I launch system, Release 3.3 Sept. 2020. [Online]. Available: https://www.northropgrumman.com/wp-content/uploads/Minotaur-User-Guide-2.pdf. [Accessed: Aug. 6, 2025].

[26] AZoM, "AZo Materials – The A to Z of Materials," [Online]. Available: https://www.azom.com. [Accessed: Aug. 5, 2025].

[27]M. F. Ashby, “Young’s Modulus and Specific Stiffness,” Cambridge University RMaterials Project [Online] Available: http://www-materials.eng.cam.ac.uk/mpsite/properties/non-IE/stiffness.html. [Accessed: Aug. 6, 2025].

[28] “All-Copper Grounding Network Ensures Reliability at Satellite Communications Station,” *Copper.org*, accessed Aug. 10, 2025. [Online]. Available: https://www.copper.org/applications/electrical/pq/casestudy/satellite_grounding_A6069.php

[29] Raspberry Pi Foundation, “Raspberry Pi Compute Module 4 (CM4) Product Brief,” 2021. [Online]. Available: https://www.raspberrypi.com/products/compute-module-4/?variant=raspberry-pi-cm4001000

[30] GomSpace, “NanoMind A3200 - Onboard Computer for CubeSats,” Datasheet, 2020. [Online]. Available: https://gomspace.com/shop/subsystems/command-and-data-handling/nanomind-a3200.aspx

[31] Pumpkin Inc., “CubeSat Kit FM430 Flight Module,” Product Manual, 2018. [Online]. Available: http://www.ee.nmt.edu/~anders/courses/ee521s12/DS_CSK_FM430_710-00252-C.pdf

[32] Wertz, J. R., Everett, D. F., & Puschell, J. J., “Space Mission Engineering: The New SMAD,” Microcosm Press, 2011. [Online]. Available: https://psu.instructure.com/courses/2387576/modules/items/43519157

[33] “International Docking System Standard (IDSS),” International Docking Standard, accessed Aug. 13, 2025. [Online]. Available: https://www.internationaldockingstandard.com/

[34] “ECSS-E-ST-60-10C (Rev. 1): Control Performance,” European Cooperation for Space Standardization (ECSS), Mar. 1, 2017, accessed Aug. 13, 2025. [Online]. Available: https://ecss.nl/standard/ecss-e-st-60-10c-rev-1-control-performance-1-march-2017/

[35] M. J. Lichter, “Star tracker accuracy improvement and optimization for attitude measurement in three-axis,” presented at the Advanced Maui Optical and Space Surveillance Technologies Conference (AMOS), Maui, HI, Sept. 17–20, 2019. [Online]. Available: https://ntrs.nasa.gov/api/citations/20200000353/downloads/20200000353.pdf

[36] Centers for Disease Control and Prevention and NIOSH, “Hydrazine — NIOSH Pocket Guide to Chemical Hazards,” accessed 2025. [Online]. Available: https://www.cdc.gov/niosh/npg/

[37] VACCO Industries, “1/4″ High Pressure Gas Fill & Drain Valve V1E10430-01 Datasheet,” accessed 2025. [Online]. Available: https://www.vacco.com/images/uploads/pdfs/fd_high_pressure.pdf

[38] C&R Technologies, “Thermal Desktop / SINDA User Guides,” accessed 2025. [Online]. Available: https://www.crtech.com/

[39] D. G. Gilmore, Ed., *Spacecraft Thermal Control Handbook: Fundamental Technologies*, 2nd ed. El Segundo, CA, USA: Aerospace Press, 2002.

[40] NASA, “Passive Thermal Control Engineering Guidebook (Revision 4.0),” NASA Technical Reports Server, accessed 2025. [Online]. Available: https://ntrs.nasa.gov/api/citations/20230013900/downloads/NASA%20Thermal%20Control%20Engineering%20Guidebook%20v4.pdf?attachment=true

[41] D. M. Goebel, I. Katz, and I. G. Mikellides, “Fundamentals of Electric Propulsion, Second Edition,” JPL, 2024. [Online]. Available: https://descanso.jpl.nasa.gov/SciTechBook/series4/Electric_Propulsion_2nd_edition.pdf

[42] Blue Canyon Technologies, “Solar Arrays — ESPA-Class Microsatellite (222–444 W),” n.d. [Online]. Available: https://www.bluecanyontech.com/components/solar-arrays/

[43] Blue Canyon Technologies, “X-Sat Venus Class — Datasheet,” 2021. [Online]. Available: https://satcatalog.s3.amazonaws.com/components/1237/SatCatalog_-Blue_Canyon_Technologies-X-Sat_Venus_Class-Datasheet.pdf

[44] Bradford Space (ECAPS), “1 N HPGP Thruster — Datasheet,” n.d. [Online]. Available: https://satcatalog.s3.amazonaws.com/components/860/SatCatalog-Bradford_Space-1N_HPGP-_Datasheet.pdf

[45] ECAPS (Bradford Space), “Green propellant LMP-103S,” n.d. [Online]. Available: https://www.ecaps.se/rocket-fuel-1

[46] S. Miller, “Performance Optimization of Storable Bipropellant Engines for Spacecraft,” NASA/TM-2007-214808, 2007. [Online]. Available: https://ntrs.nasa.gov/api/citations/20070031975/downloads/20070031975.pdf

[47] Rafael Advanced Defense Systems, “Space Propulsion Catalog 2024,” 2024. [Online]. Available: https://www.rafael.co.il/wp-content/uploads/2024/05/RAFAEL-SPACE-CATALOG-2024_compressed.pdf

[48] Moog, “Cold Gas Thrusters — Datasheet,” 2021. [Online]. Available: https://www.moog.com/content/dam/moog/literature/sdg/space/propulsion/moog-coldgasthrusters-datasheet.pdf

[49] W. DeGroot, “Chemical Microthruster Options,” NASA, 1996. [Online]. Available: https://ntrs.nasa.gov/api/citations/19970001472/downloads/19970001472.pdf

[50] Power_Lego_Summer lecture slides, course handout, 2025.

[51] SynQor, “PQ48120HGA12 — 150 W Isolated DC/DC Converter (Datasheet),” Rev. HGA12, 2019–2020. [Online]. Available: https://www.synqor.com/document-download?document=PQ48120HGA12+Datasheet.pdf

[52] GomSpace, “NanoPower P31u — Electrical Power System (Datasheet DS 1009525 32),” Sep. 1, 2023. [Online]. Available: https://gomspace.com/UserFiles/Subsystems/datasheet/gs-ds-nanopower-p31u-32_%281%29.pdf

[53] NASA, “Energy Storage Technologies (D-30268),” 2004. [Online]. Available: https://solarsystem.nasa.gov/system/downloadable_items/162_D-30268_A._-Energy_Storage_Technologies_2004_1-_cleared_version1.pdf

[54] NASA Small Spacecraft Systems Virtual Institute (S3VI), “3.0 Power — State-of-the-Art of Small Spacecraft Technology,” 2025. [Online]. Available: https://www.nasa.gov/smallsat-institute/sst-soa/power

[55] G. Hirzinger et al., “The DLR Lightweight Robot—Design and Control Concepts for Robots in Human Environments,” (DLR LWR): whole-arm power <150 W in normal operation, showing your ~80 W arm figure is within literature range. [Online]. Available: https://doi.org/10.1109/IROS.2001.976276

[56] A. Wedler et al., “DLR’s Dynamic Actuator Modules for Robotic Space Applications,” ESMATS. [Online]. Available: https://esmats.eu/amspapers/pastpapers/pdfs/2015/wedler.pdf

[57] Orbit Fab, “RAFTI User Guide (DOC-00012-A),” interface datasheet indicating pumped/pressurized transfer compatibility for refueling architectures. [Online]. Available: https://www.orbitfab.space/rafti

[58] Cole-Parmer / Micropump®, “GA-Series OEM Brushless DC Drive Gear Pump,” datasheet (20–30 VDC, ~40 W class), representative of the ~38.3 W pump budget you used. [Online]. Available: https://www.coleparmer.com/micropump

[59] D. Hegel (Blue Canyon Technologies), “Nano Star Tracker (NST) Overview,” Cal Poly presentation: nominal star tracker power ≈0.75 W (≤1 W peak). [Online]. Available: https://digitalcommons.calpoly.edu/aerosp/

[60] Blue Canyon Technologies, “Reaction Wheels” datasheet (Rev. 1/2025): RWp015/RWp050/RWp100 show <1 W at full momentum; 5.5–9 W peak—supports low-single-digit average GNC actuation power within a ~22.55 W GNC budget. [Online]. Available: https://bluecanyontech.com/wp-content/uploads/2025/01/RW-Datasheet.pdf

[61] GomSpace, “NanoMind A3200 OBC,” product spec (typical OBC electrical: ~0.17–0.9 W), matching your 0.9 W C&DH figure with comms off. [Online]. Available: https://gomspace.com/shop/subsystems/onboard-computers/nanomind-a3200.aspx

[62] SynQor, “NQ40x40QGx30 Non-Isolated DC-DC Converter,” datasheet (up to ~95% efficiency at rated load), supporting your EPS conversion-loss assumption when checking positive energy balance in sunlight. [Online]. Available: https://www.synqor.com/nq40x40qgx30