Installation Manual and Operating Instructions

TRUE BLUE POWER

TB270 SERIES

ADVANCED LITHIUM-ION BATTERY

Manual Number

Revision 6 • March 26, 2026

FOREWORD

This manual provides information intended for use by persons who, in accordance with current regulatory requirements, are qualified to install this equipment. If further information is required, please send inquiries per the contact information below.

We welcome your comments concerning this manual. Although every effort has been made to keep it free of errors, some may occur. When reporting a specific problem, please describe it briefly and include the manual part number, the paragraph/figure/table number and the page number. Send your comments to:

True Blue Power
c/o Mid-Continent Instrument Co., Inc.
9400 E. 34th St. N.
Wichita, KS 67226 USA

Phone 316-630-0101
Email: tbp@mcico.com

Or, visit us on the web at:
www.truebluepowerusa.com

SCAN QR CODE

Download the current version of this installation manual using your smartphone or tablet.

© Copyright 2023
Mid-Continent Instrument Co., Inc.

TABLE OF CONTENTS

SECTION 1 GENERAL DESCRIPTION 5

1.1 INTRODUCTION 5
1.2 PHYSICAL ATTRIBUTES 5
1.3 UNIT ARCHITECTURE 6
1.4 TECHNICAL SPECIFICATIONS 7
1.5 IMPORTANT SAFETY INFORMATION 11

SECTION 2 PRE-INSTALLATION CONSIDERATIONS 13

2.1 COOLING 13
2.2 EQUIPMENT LOCATION 13
2.3 ROUTING OF CABLES 13
2.4 LIMITATIONS 14
2.5 MODIFICATION 14

SECTION 3 INSTALLATION 15

3.1 GENERAL 15
3.2 PRE-INSTALLATION INSPECTION 15
3.3 PARTS 15
3.4 INSTALLATION 17

SECTION 4 OPERATION 29

4.1 DESCRIPTION 29
4.2 CONSTRUCTION AND THEORY OF OPERATION 29
4.3 OPERATIONAL MODES 32
4.4 BATTERY COMMUNICATION 40
4.5 PERFORMANCE 48

SECTION 5 CONFORMANCE 50

5.1 DISPATCH VERIFICATION AND IN-FLIGHT MONITORING 50
5.2 INSTRUCTIONS FOR CONTINUED AIRWORTHINESS 50
5.3 CONTROL MODE 51
5.4 OPTIONAL SERVICE 56
5.5 COMPONENT SERVICE 58
5.6 STORAGE INFORMATION 59
5.7 END OF LIFE 60
5.8 DISPOSAL 60
5.9 TB271 DO-311A COMPLIANCE QUALIFICATION FORM 61
5.10 TB272 DO-311A COMPLIANCE QUALIFICATION FORM 62
5.11 TB273 DO-311A COMPLIANCE QUALIFICATION FORM 63
5.12 DO-160 ENVIRONMENTAL QUALIFICATION FORM 64

LIST OF TABLES AND FIGURES

Table 1.1 Electrical Attributes....7
Table 1.2 Physical Attributes....7
Table 1.3 Qualifications....7
Table 3.1 Included Parts....15
Table 3.2 Available Parts....16
Table 3.3 Wire Sizes and Type....17
Table 3.4 18-pin Comm Connector Pinout....20
Table 3.5 26-pin Comm Connector Pinout....20
Table 3.6 Power Connector Pinout....21
Table 4.1 Battery Protections....39
Table 4.2 Discrete Output Definitions....42
Table 4.3 ARINC 429 Label Definition....44
Table 4.4 ARINC 429 Label Format....45
Table 4.5 State of Charge Indication....46
Table 5.1 Service Light Status....52

Figure 1.1 TB271-1 (2.5Ah) Outline Drawing....8
Figure 1.2 TB272-1 (5.0Ah) Outline Drawing....9
Figure 1.3 TB273-2 (7.5Ah) Outline Drawing....10
Figure 2.1 Nameplate and MOD Status Example....14
Figure 3.1 TB271-1 and TB272-1 Connection Features....18
Figure 3.2 Connection Features....19
Figure 3.3 18-pin Comm Connector....20
Figure 3.4 26-pin Comm Connector....20
Figure 3.5 Power Connector....21
Figure 3.6 TB27X Wiring Diagram(-1 Units)....21
Figure 3.7 TB27X Wiring Diagram (-2 Units)....22
Figure 3.8 Hold-Down Mounting Features....23
Figure 3.9 Hold-Down Mounting Features....24
Figure 3.10 Hold-Down Mounting Features....25
Figure 3.11 Hold-Down Kit Parts....25
Figure 4.1 Operational Modes State Diagram (-1 Units)....34
Figure 4.2 Operational Modes State Diagram (-2 Units)....35
Figure 4.3 100 Ω RTD Resistance vs. Temperature Figure....40
Figure 4.4 100 Ω RTD Resistance vs. Temperature....41
Figure 4.5 On-Board Status Indicator....47
Figure 4.6 Battery Heating Performance....49
Figure 5.1 USB Service Port (-1 Units Only)....51
Figure 5.2 On Board Status Indicator & USB Service Port (-2 Units Only)....51

REVISION HISTORY

Rev	Date	Detail	Approved
1	08/02/2023	Preliminary specification draft.	BAW
2	08/29/2023	Updates to prelim version.	BAW
3	2/21/2024	Updated sleep mode voltage value.	WVC
4	08/28/2024	Updated Power Connector wire gauge size and Power Connector Jumper Pins.	WVC
5	02/11/2025	Updated transmit times for 271, 337 in Table 4.4	BAW
6	03/26/2026	Added TB273 Information, details regarding -1 and -2 units	WVC

SECTION 1 GENERAL DESCRIPTION

1.1 INTRODUCTION

The TB270 series Advanced Lithium-ion Batteries, part numbers 6430271-( ), 6430272-( ) and 6430273-( ) are designed to deliver high voltage, and high current capability for advanced aerospace loads in both start-up and emergency backup situations. The TB270 batteries are sophisticated energy storage and power systems that utilize state-of-the-art Nanophosphate® lithium-ion battery cell technology to optimize performance, safety, life and weight when compared to traditional or competing aircraft batteries. The design of the batteries include detailed focus on key electrical, mechanical, and software elements that combine to provide exceptional performance and safety that meets and exceeds the latest regulatory and industry standards. The TB270 series of batteries (TB271, TB272 and TB273) are complete battery solutions providing significant value and benefit to an aircraft designer and mission operations.

Key features of the TB270 series high voltage batteries include real-time state of charge and capacity reporting, programmable battery parameters configurable to individual installations, and maintenance-free operation with on-condition end of life. Multiple safety protections, continuous data monitoring, and an on-board status indicator also add value, reliability, and reduced direct operational costs for the life of the product.

The TB270 series Advanced Lithium-ion Batteries require professional use and minimal service to deliver maximum performance and value as designed. This manual contains information related to the specifications, installation, operation, storage, scheduled service and other related topics associated with the proper care and use of this product.

1.2 PHYSICAL ATTRIBUTES

The TB270 batteries are a single, integrated component contained in a metal enclosure with multiple interface connections. There is a primary D38999 industry standard mil-spec power receptacle, an 18-pin or 26-pin circular communications connector, and a threaded grounding location. A USB service port and an integrated push-button status indicator with LED indicators are available for ground operations as well. The batteries are designed to be base-mounted in the aircraft using four corner brackets and a horizontal crossbar. The 1.25- or 1.50-inch diameter vent ports are located on the front of the unit for an exhaust connection that provides safe management of any released emissions.

1.3 UNIT ARCHITECTURE

The unit is comprised of two primary building blocks:

- Battery cell modules with on-board monitoring
- Battery Management System (BMS) with control, protections, and communication functions

Each battery sub-module consists of forty (40) cells arranged in series and then connected to another sub-module for a total of eighty (80) cells per module. The TB271 is a single module battery rated at 2.5 amp-hours (Ah), the TB272 has two modules in parallel rated at 5.0 Ah, lastly the TB273 has three modules in parallel rated at 7.5 Ah. The cells are electrically connected within the sub-modules using welded bus bars. Each sub-module contains multiple temperature monitors and multiple heaters that improve cold weather performance. Each sub-module and whole module are finally connected through a network of high-current bus bars that provide combined power to the main connector and thus the aircraft.

The Battery Management System (BMS) is a microprocessor-based system that monitors individual signals provided by each module, manages battery operation and reports status information to the aircraft. It also manages heater functionality, stores operating parameters, contains an event log and provides interface capability.

Additional components in the unit include independent Resistance Temperature Detectors (RTDs) that produce analog electrical signals accessible through the 18-pin connector for redundant temperature monitoring.

1.4 TECHNICAL SPECIFICATIONS

Electrical Attributes		TB271	TB272	TB273
Power Input	270-288 volts DC, Nominal	25 amps, peak	50 amps, peak	100 amps, peak
Power Output	264 volts DC, 100% SOC	120 amps	240 amps	240 amps
Battery Capacity (Beginning of Life, 23°C)		2.5 amp-hours	5.0 amp-hours	7.5 amp-hours

Table 1.1
Electrical Attributes

Physical Attributes	TB271	TB272	TB273
Weight	20.7 lbs [9.4 kg]	38.7 lbs [17.6 kg]	60.0 lbs [27.2 kg]
Dimensions at base	11.0 x 13.2 in [280 x 337 mm]		
Height	3.3 in [84 mm]	6.3 in [160 mm]	9.3 in [236 mm]
Power Receptacle Communications Connector USB Service Data Port	MIL-DTL-38999, Series 3; 2-pin power, 4-pin signal MIL-DTL-5015, 18-pin circular (-1 units) MIL-DTL-38999, 26-pin circular (-2 units) USB 2.0, Type-A port (-1 units) USB 2.0 functionality via 26-pin circular (-2 units)		
Mounting	Base mounted, with corner brackets, crossbar with tie rods. See Section 3.4.2		

Table 1.2
Physical Attributes

Qualifications (PENDING)	
Certification	FAA TSO-C179b, Class A-4B
Performance Qualification	RTCA/DO-311A Minimum Operational Performance Standard for Rechargeable Lithium Batteries and Battery Systems (See Sections 5.9 – 5.11)
Environmental Qualification	RTCA/DO-160G (See Section 5.12)
Software Qualification	RTCA/DO-178C, Design Assurance Level (DAL) A
Mil-Standard Qualification (inquire for details)	MIL-STD-810H MIL-STD-461G

Table 1.3
Qualifications

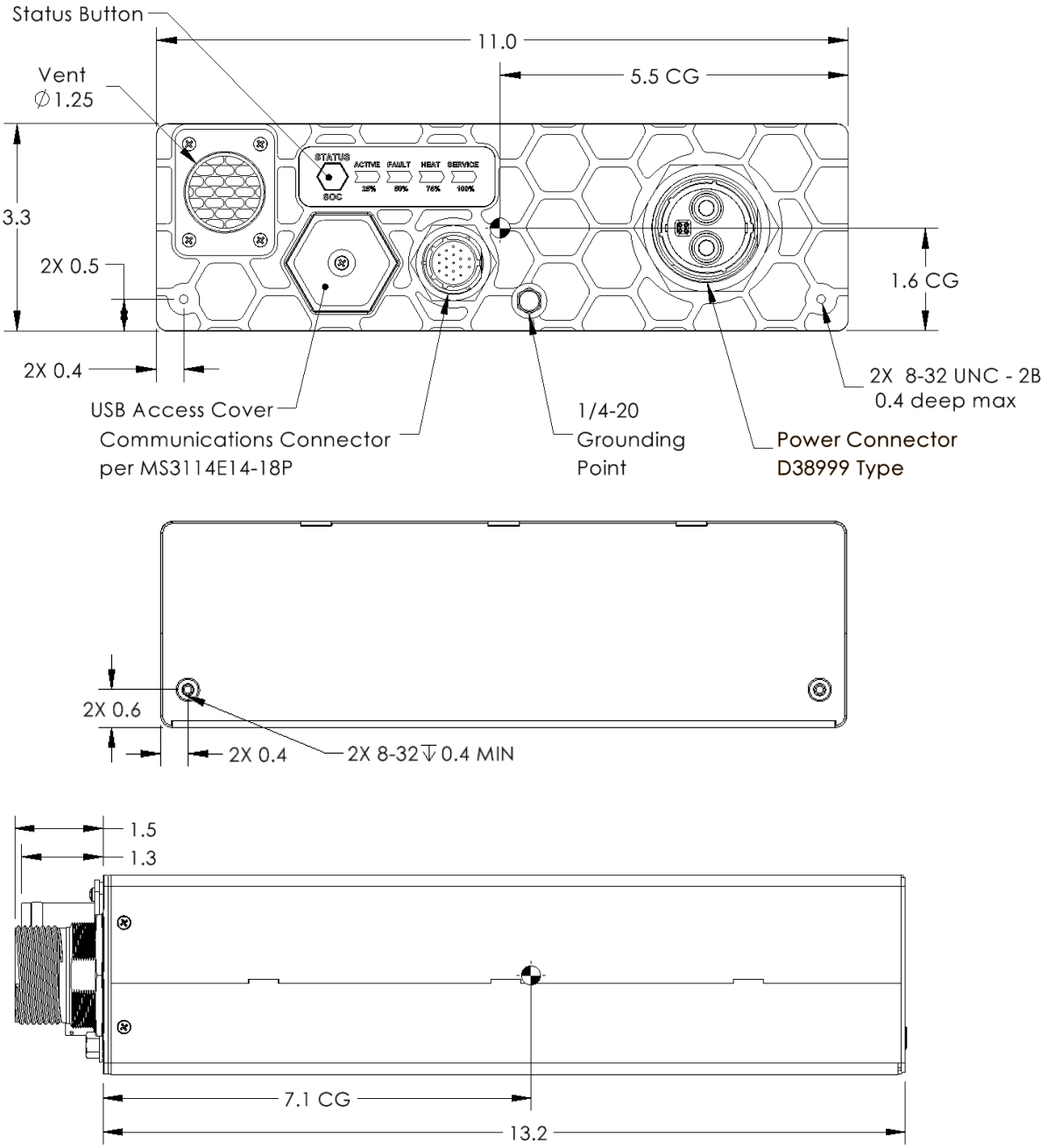

Figure 1.1
TB271-1 (2.5Ah) Outline Drawing
(Front, Rear, Side)

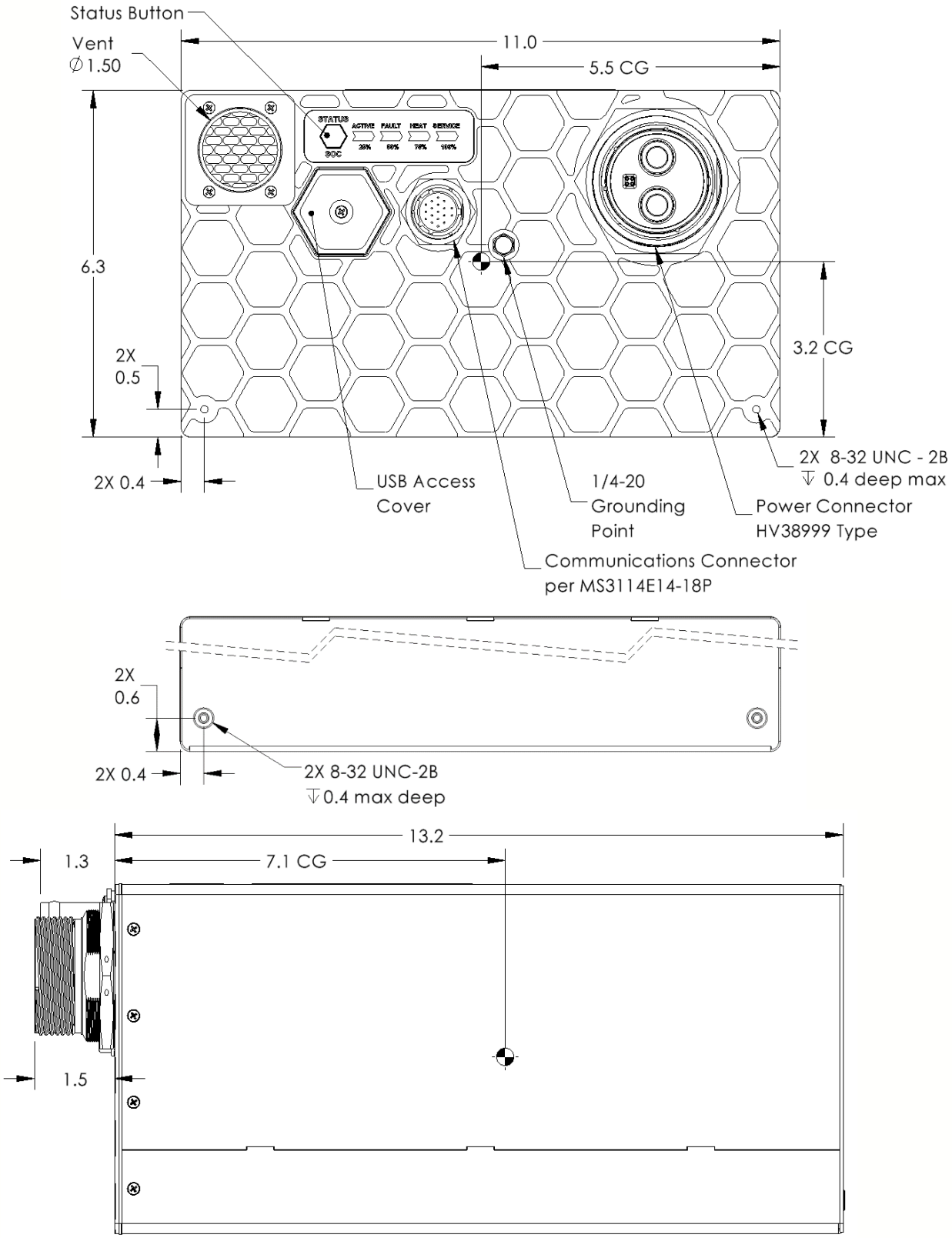

Figure 1.2
TB272-1 (5.0Ah) Outline Drawing
(Front, Rear, Side)

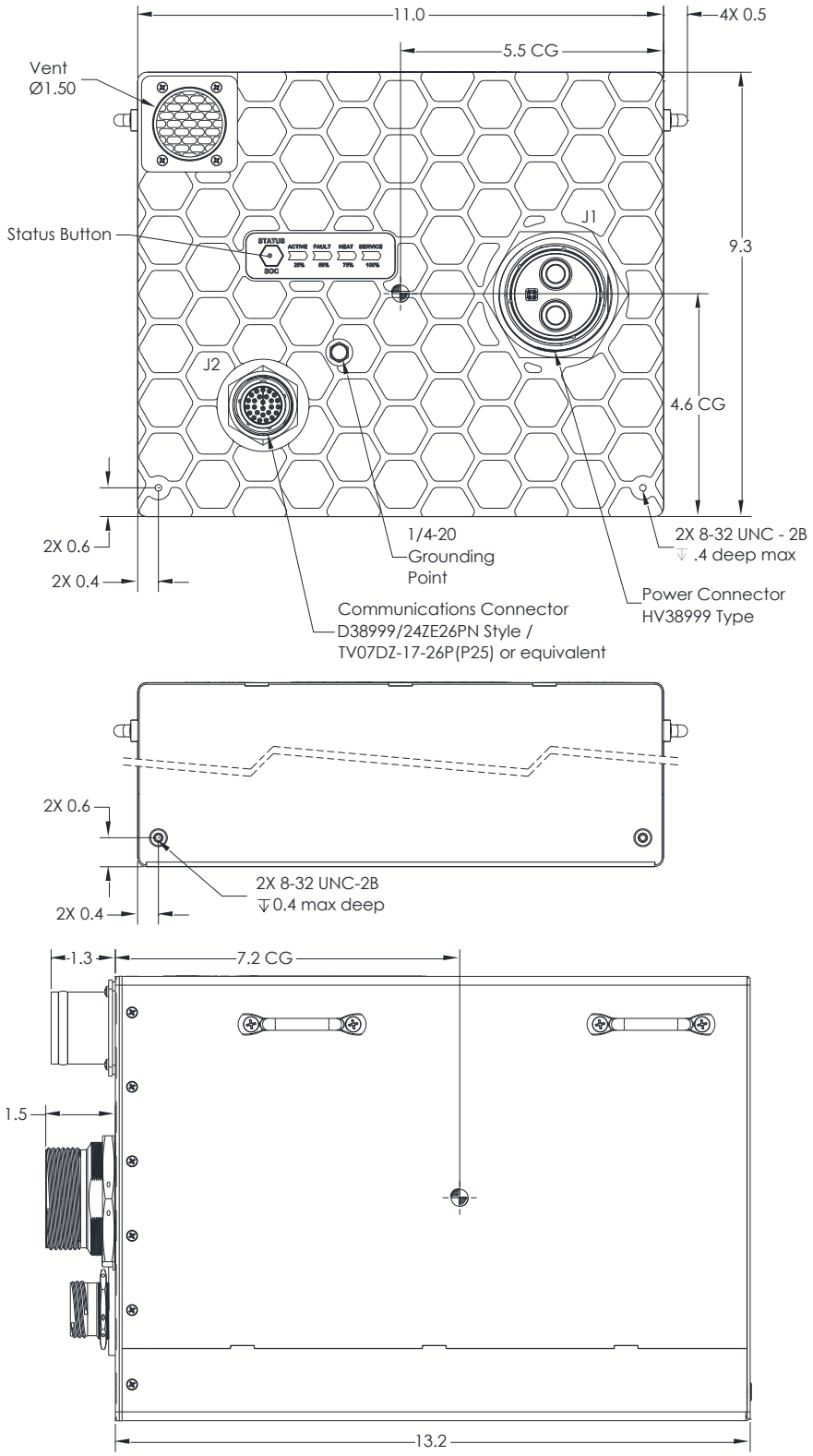

Figure 1.3
TB273-2 (7.5Ah) Outline Drawing
(Front, Rear, Side)

1.5 IMPORTANT SAFETY INFORMATION

Read this safety information BEFORE maintaining or servicing the battery.

1.5.1 Symbol Definition

This section describes the precautions necessary for safe operations. The following safety symbols have been placed throughout the guide.

WARNING

Warnings identify conditions or practices that could result in personal injury.

CAUTION

Cautions identify conditions or practices that could result in damage to the equipment.

1.5.2 Handling Precautions

WARNING

The battery pack's energy is high enough to sustain an ARC flash. Always wear safety glasses, fire retardant smocks, and use insulated tools when servicing the battery.

- Remove metal items such as rings, bracelets, and watches when working with battery packs. A battery could produce a short circuit current high enough to weld jewelry to metal and cause a severe burn.
- Always use appropriate Electrostatic Discharge (ESD) protection while working with the battery pack.
- All connections for battery pack testing must include appropriate short-circuit protection.
- The battery pack service area shall be properly ventilated and egress paths shall be unobstructed.
- Specialized breathing filters are not required under normal use.
- Always use electrically insulated tools.
- Never smoke or allow a spark or flame near the battery pack.
- Use caution to reduce the risk of dropping a metal tool on the battery. Dropping a tool could spark or short circuit the battery pack.
- Turn all accessories off before removing the ground terminal.
- Use appropriate lifting devices or equipment for handling batteries; use battery handles where provided.

1.5.3 Additional Precautions

The following design and operation factors are required for safe use.

CAUTION

- It is not acceptable to combine or use any battery cells or modules other than those approved by True Blue Power within this battery pack.
- There are no limitations in storing or using this battery in the vicinity of other battery chemistries. This battery does not emit or absorb any gas during storage, transportation or during normal operating conditions.
- Batteries must not be installed with the output terminals reversed. A reversed battery could be charged by other batteries in the circuit during discharge; or discharged by the charging system during charge.
- Battery terminals should be covered with non-conductive protective devices to avoid any possibility of shorting during handling, shipping or storage. NEVER connect the two terminals of the battery together with a direct electrical connection.
- The TB270 batteries are high voltage batteries and should be handled with caution. Once pins D & E on the power connector are shorted, the high voltage receptacles can provide high currents at ~ 270 Volts.

1.5.4 Shipping

PENDING CERTIFICATION

True Blue Power lithium-ion cells and batteries are designed to comply with all applicable shipping regulations as prescribed by industry and regulatory standards. This includes compliance with the UN recommendations on the Transport of Dangerous Goods, IATA Dangerous Goods Regulations, applicable U.S. DOT regulations for the safe transport of lithium-ion batteries, and the International Maritime Dangerous Goods Code. In accordance with IATA and per UN 3480, PI 965, Section 1A and 1B, when shipped by air, the True Blue Power Advanced Lithium-ion Battery will be shipped with a state of charge (SOC) not to exceed 30% of rated capacity. This battery is classified as a Class 9 Dangerous Goods. If the battery requires shipment, please refer to Section 5.4.5 or contact the manufacturer for additional instructions on proper procedures.

CAUTION

NOTE: The unit is shipped with approximately 30% state-of-charge (SOC). Upon receipt the battery shall be fully charged using the procedures listed in this manual (prior to storage and again prior to installation/use).

Upon receipt the battery shall be fully charged. Batteries that are stored thereafter shall be fully recharged at a minimum every six (6) months, following the procedure set forth in Section 5.4.2. For more detailed storage instructions refer to Section 5.6.

SECTION 2 PRE-INSTALLATION CONSIDERATIONS

2.1 COOLING

No internal or external cooling of the unit is required. The unit is designed to operate over a wide temperature range and includes internal thermal monitoring and protection circuits. See Section 4 for more details.

2.2 EQUIPMENT LOCATION

The True Blue Power Advanced Lithium-ion Battery is designed for mounting flexibility, allowing for installation with no requirement for temperature or pressure control. Although not required, optimum performance and life can be achieved by mounting the battery in a temperature-controlled section of the aircraft. In addition to altitude and temperature tolerance, the unit is designed to withstand high levels of condensing humidity. However, installation locations where the unit could be subject to standing or direct water exposure should be avoided. The unit should be mounted in the upright position.

Failure mode, effects, and criticality analysis of the battery has shown that the potential for the release of toxic or flammable gases as a result of any potential condition is extremely improbable. However, for additional risk mitigation, the unit is designed with a vent which should be connected and diverted overboard in the event of such an occurrence. Details for vent installation are provided in Section 3. For additional precaution, installation near potential sources of ignition should be avoided.

Consideration should be given to how the status and reporting functions of the battery will be displayed within the aircraft. At a minimum, critical parameters determined at the time of certification should be available to the pilot and/or crew. Additionally, existing aircraft systems which are designed to work with traditional batteries may need alteration in order to accommodate the slight change in voltage output of this lithium-ion battery and the communication capabilities available.

2.3 ROUTING OF CABLES

The power terminal wires associated with the unit are heavy gauge wire and carry significant power. Be aware of routing cables near other electronics or with other wire bundles that may be susceptible to high energy flow.

Avoid sharp bends in both the power cables and the signal cabling and be cautious of routing near aircraft control cables. Also avoid proximity and contact with aircraft structures, avionics equipment, or other obstructions that could chafe wires during flight and cause undesirable effects. Cables should not run adjacent to heaters, engine exhausts, or other heat sources. The signal cable bundle wires are recommended to be no smaller than 24 gauge.

2.4 LIMITATIONS

The TB270 series of batteries operate at temperatures up to 70°C. If, however, internal cell temperatures exceed 72°C, charging is disabled until cell temperatures fall below 62°C.

2.5 MODIFICATION

This product has a nameplate that identifies the manufacturer, part number, description, certification(s) and technical specifications of the unit. It also includes the “MOD” or modification number representing notable changes in the hardware design of the unit.

Modification (MOD) 0 is the initial release of the product and is identified on the nameplate by the lack of marking on the MOD numbers 1 through 9 (i.e. 1-9 are visible). All subsequent modifications are identified on the nameplate by the marking/blacking out of that particular MOD number (i.e. for MOD 1, the number 1 is not visible and 2-9 are visible - see Figure 2.1 for examples). MODs do not have to be sequentially inclusive and may be applied independent of each other.

For additional details regarding specific changes associated with each MOD status refer to the published Service Bulletins for the product at www.truebluepowerusa.com.

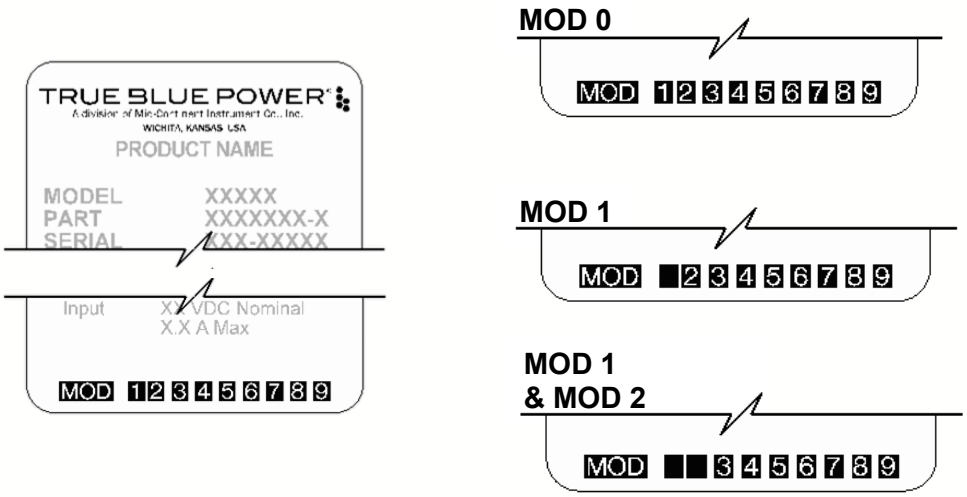

Figure 2.1
Nameplate and MOD Status Example

SECTION 3 INSTALLATION

3.1 GENERAL

This section contains mounting, electrical connections and other information required for installation. These instructions represent a typical installation and are not specific to any aircraft.

3.2 PRE-INSTALLATION INSPECTION

Unpacking: Carefully remove the battery from the shipping container. The shipping container and packing are designed specifically for the transit of lithium batteries and approved by international transportation agencies. These materials should be retained for use should the unit require future shipment.

Inspect for Damage: Inspect the shipping container and unit for any signs of damage sustained in transit. If necessary, return the unit to the factory using the original shipping container and packing materials. File any claim for damages with the carrier.

CAUTION

Note: The unit is shipped at approximately 30% state of charge (SOC).
Upon receipt, the battery shall be fully charged using the procedures listed in this manual (prior to storage and again prior to installation/use).

3.3 PARTS

3.3.1 Included Parts

	TB271	TB272	TB273
TB270 Advanced Lithium-ion Battery	6430271-( )	6430272-( )	6430273-( )
Installation and Operation Manual	9020539		

Table 3.1
Included Parts

3.3.2 Available Parts

	TB271	TB272	TB273-1	TB273-2
Connector Kit (power, comm)	9020505-1	9020505-2	9020505-2	9020505-3
Vent Kit (48” vent hose, clamps)	9019322-1	9018043		
Mounting Kit (corner brackets (x4), silicone pad, hold down bar)	9020462-1			
USB Access Cover Replacement	9015282-1			N/A
Dust Caps	SEC-26 (power); SEP-16 (comm)	SEP-36 (power); SEP-16 (comm)		SEP-36 (power); SEC-19 (comm)
	SEC-20 (vent)	SEC-26 (vent)		

Table 3.2
Available Parts

3.3.3 Installer Supplied Parts

A. Wires
B. Appropriate hold-down hardware (not included with mounting kit)

3.4 INSTALLATION

WARNING

DO NOT SHORT TERMINALS AT ANY TIME!

Extreme care and caution should be applied when handling and connecting to the unit. Danger of short circuit and subsequent arc flash, electrical burns or equipment damage can occur if not handled properly.

Install the battery in the aircraft in accordance with the aircraft manufacturer's instructions and the following sections. If connecting batteries in parallel contact manufacturer for guidelines on parallel operation.

3.4.1 Harness Preparation

Prepare aircraft wiring with mating connectors in accordance with the proper Wire Sizes and Type (**Error! Reference source not found.**), Connection Features (Figure 3.1) and Pin Identification Diagrams (Figures 3.3 and 3.4).

Proper grounding requires connecting the ground lug on the chassis to the aircraft frame. In addition, connect the ground lug to the 18-pin or 26-pin data communication connector backshell along with the cable shield and any signal shields.

Use of PTFE, ETFE, TFE, Teflon or Tefzel insulated wire is recommended for aircraft use. Recommended wire sizes and types are identified in Table 3.1 below.

Wire Sizes and Type						
Wire Gauge	Wire Type	Connector	Pins	TB271	TB272	TB273
4 AWG *	Stranded Copper	Power	A-B (+/-)	X		
0 AWG *	Stranded Copper	Power	A-B (+/-)		X	X
18-24 AWG	Stranded Copper	Power	D & E**	X	X	X
18-24 AWG	Stranded Copper	Comm (18-pin and 26-pin)	A-U / A-Z & a-c	X	X	X

*Note: Wire gauge size for power connections is dependent on the particular aircraft installation, taking into consideration cable length, load profile, etc.

**Note: Pins D & E on Power Connector must be strapped for battery operation.

Table 3.3
Wire Sizes and Type

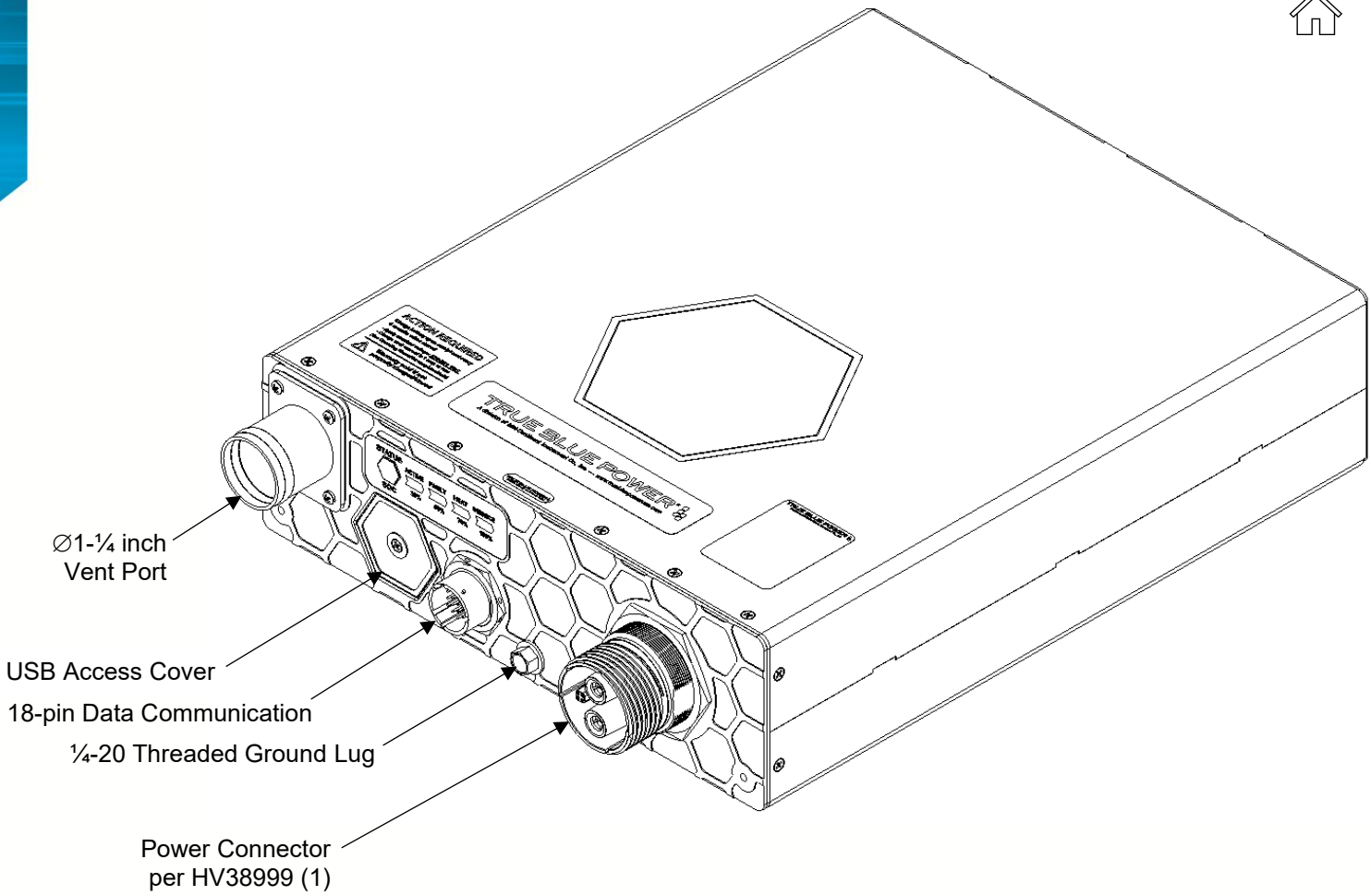

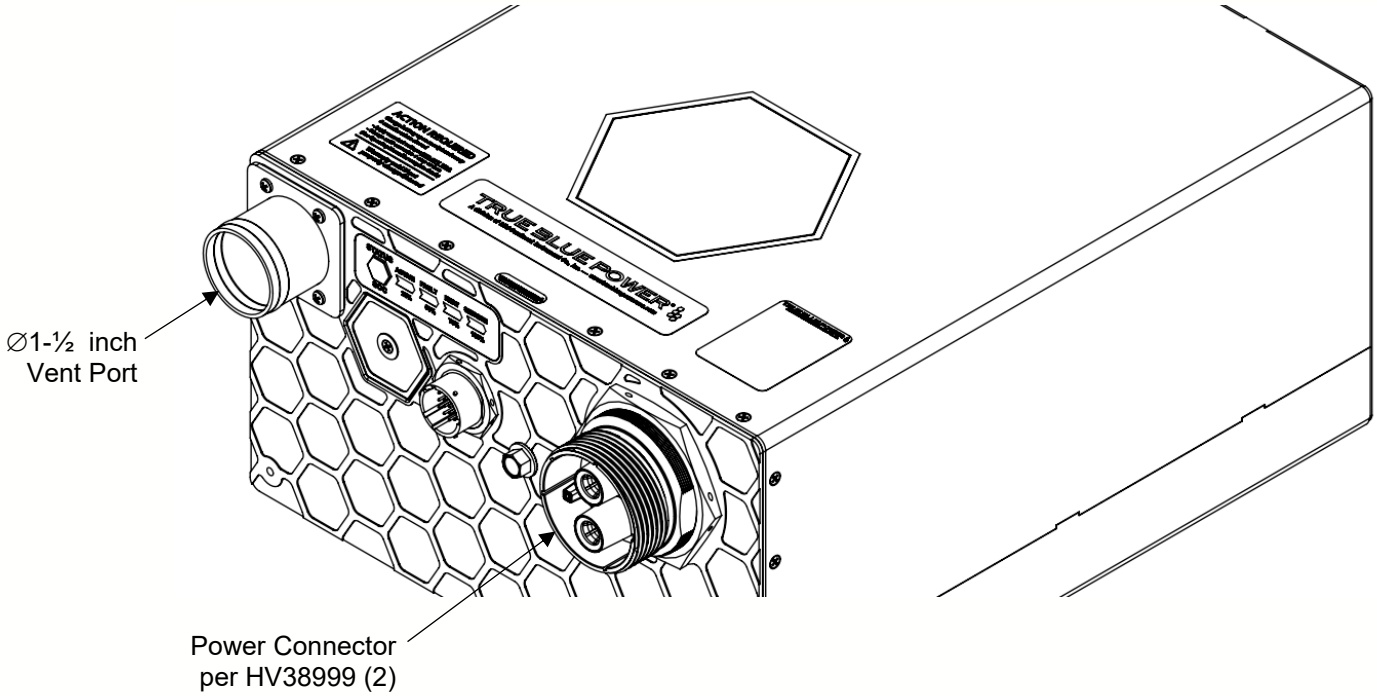

Figure 3.1
TB271-1 and TB272-1 Connection Features
TB271-1 and TB272-1 shown

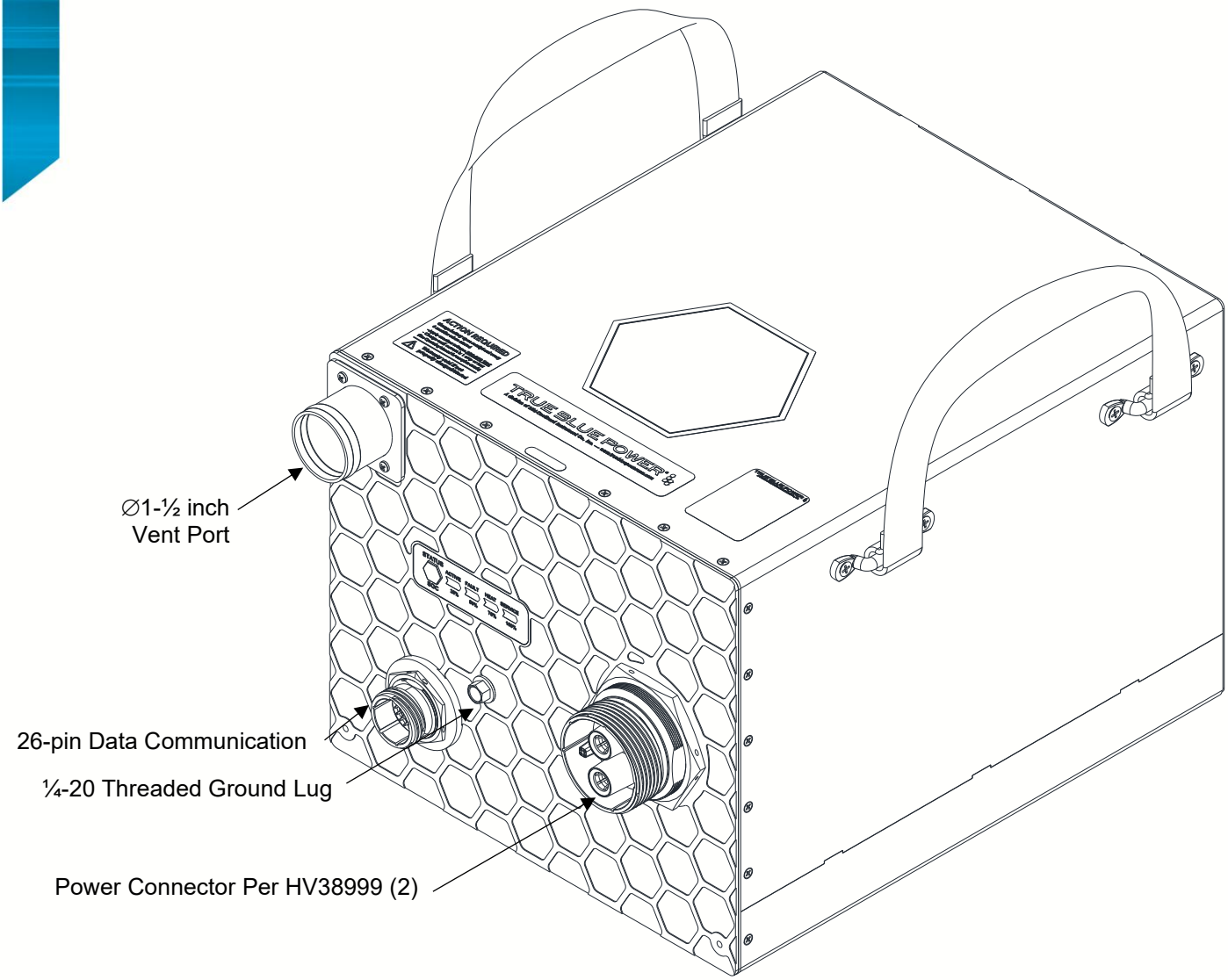

Figure 3.2
Connection Features
TB273-2 shown

Communication Connector (18-pin)	
Pin	**Description**
A	Analog SOC
B	Battery Disable Input
C	Heater Disable Input
D	RTD-1A
E	RTD-1B
F	RTD-2A
G	RTD-2B
H	ARINC 429 (A)
J	Service Discrete
K	Fault Discrete
L	Heating Discrete
M	Minimum SOC Discrete
N	Analog Ground
P	Charge Limit
R	Spare
S	ARINC Shield
T	Engine Start Discrete
U	ARINC 429 (B)

Table 3.4
18-pin Comm Connector Pinout

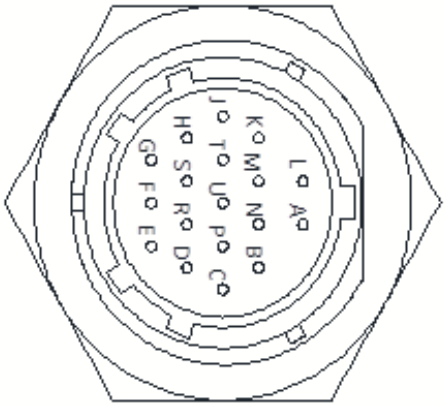

Figure 3.3
18-pin Comm Connector

Communication Connector (26-pin)	
Pin	**Description**
A	D-, USB Data
B	D+, USB Data
C	Service Discrete
D	Fault Discrete
E	Battery Active Mode Discrete Output
F	Battery Enable Discrete Input
G	Battery On (28V) Discrete Output
H	Heating (28V) Discrete Output
J	Spare
K	RTD-2B
L	RTD-2A
M	RTD-1B
N	RTD-1A
P	Strapping / ID Pin 1
R	ARINC 429 (A)
S	ARINC 429 (B)
T	USB Power
U	Spare
V	Charge Limit
W	Heater Enable Discrete Input
X	Spare
Y	RTD-3B
Z	RTD-3A
a	Strapping / ID Pin 2
b	ARINC Shield
c	Discrete Return

Table 3.5
26-pin Comm Connector Pinout

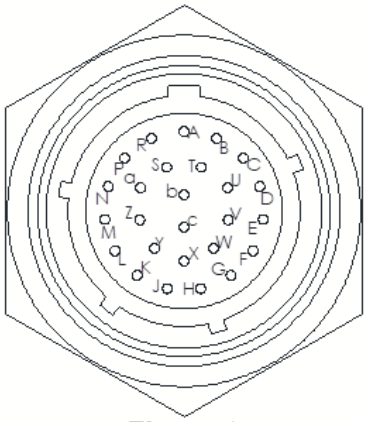

Figure 3.4
26-pin Comm Connector

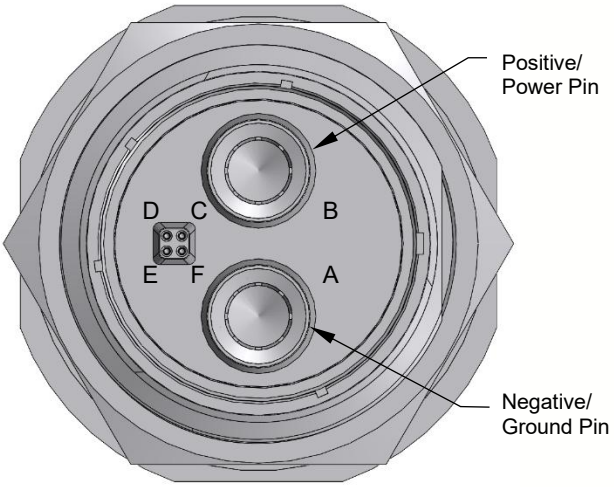

Figure 3.5
Power Connector

Power Receptacle (4-pin)	
Pin	**Description**
A (–)	**– VDC (negative)**
B (+)	**+ VDC (positive)**
C	**Reserved**
D	**Jumper**
E	**Jumper**
F	**Reserved**

Table 3.6 Power Connector Pinout

3.4.2 Wiring Diagrams (Communications Connections)

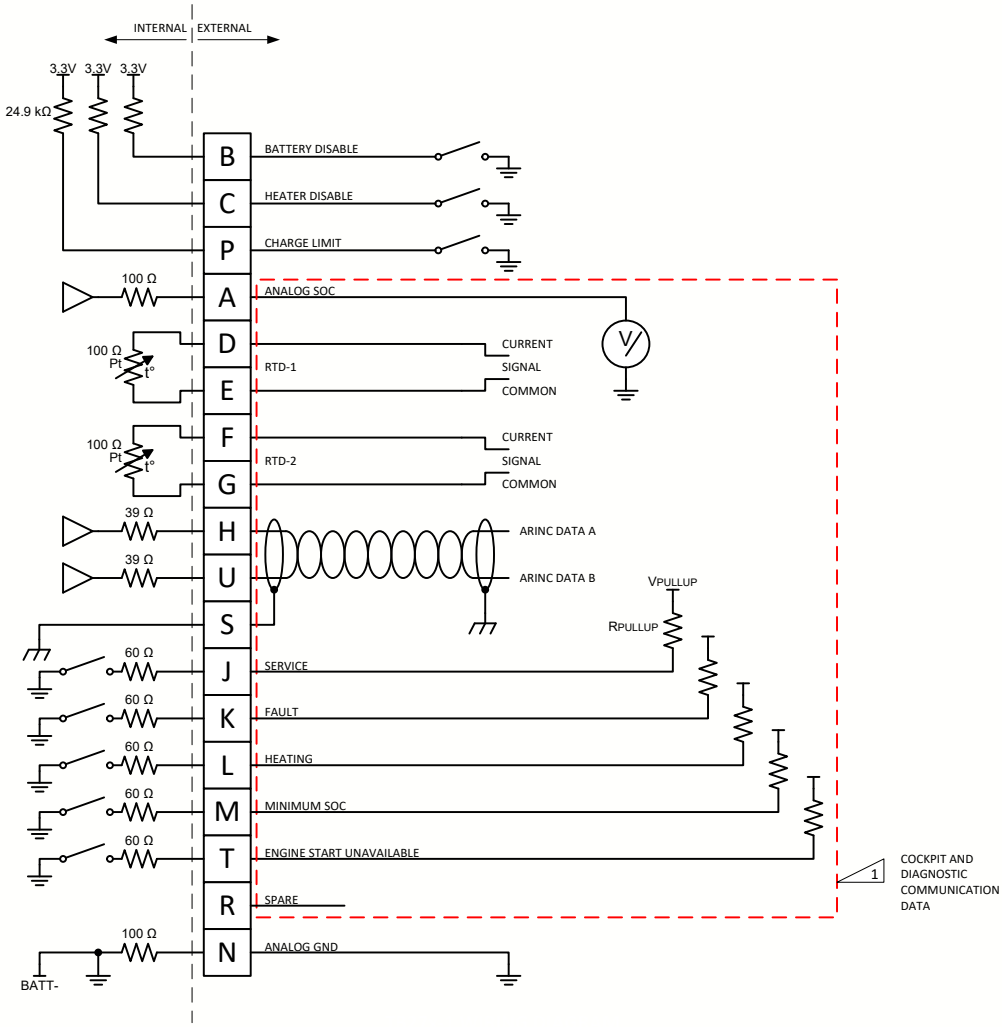

Figure 3.6
TB27X Wiring Diagram(-1 Units)

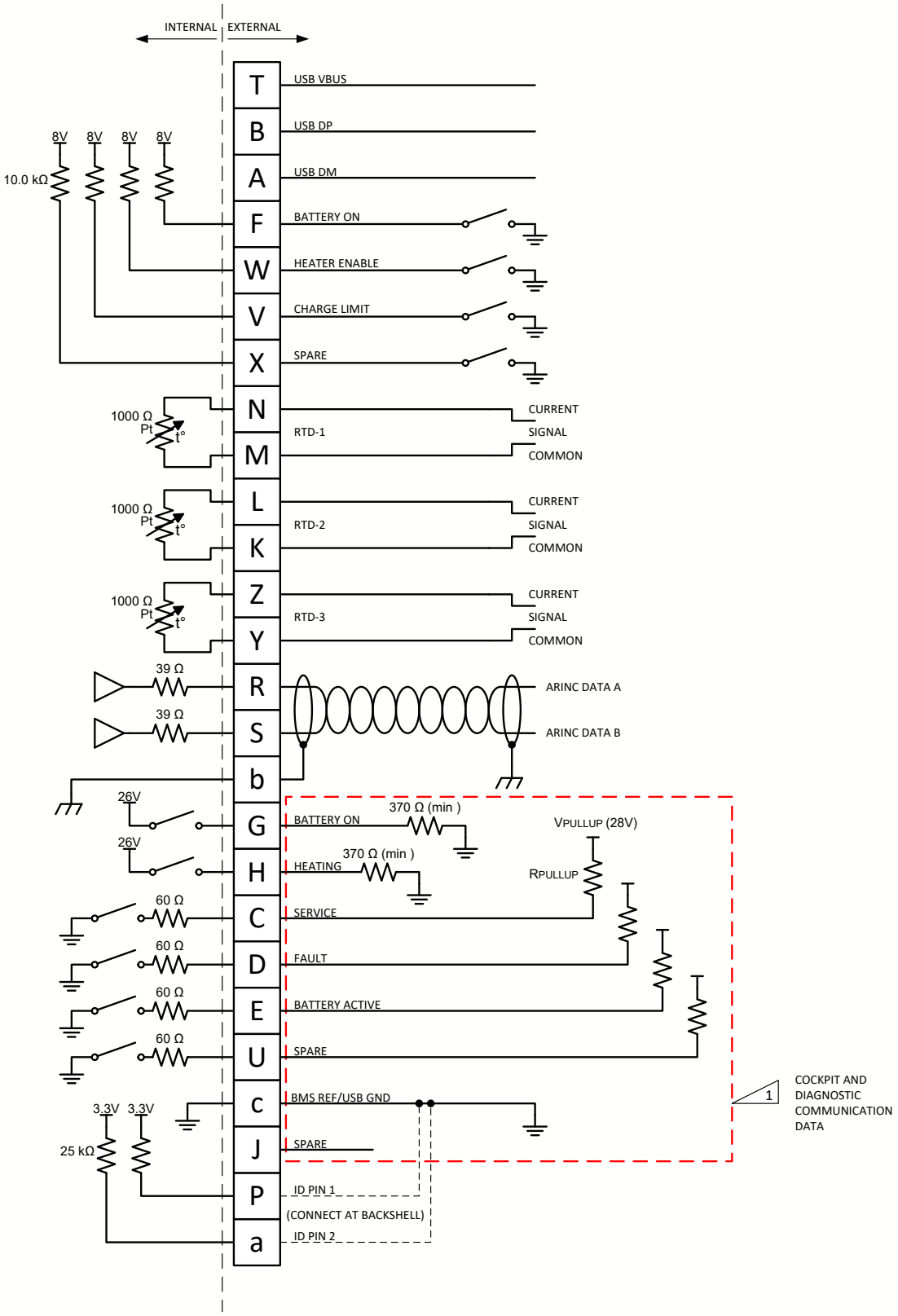

Figure 3.7
TB27X Wiring Diagram (-2 Units)

3.4.3 Securing the Unit

The battery is designed to be base-mounted in the aircraft using four corner brackets and sitting atop a 0.060” silicone pad. A “U” shaped hold down bracket is situated left to right in the middle of the battery to retain the battery in the vertical axis. The hold down bracket is secured to the aircraft structure, typically with a threaded rod secured into a clevis fork or similar bracket mounted to a base structure. See Figures 3.7, 3.8 and 3.9 for additional details. The bolt for grounding lug is to be torqued to 35 in-lbs (3.9Nm).

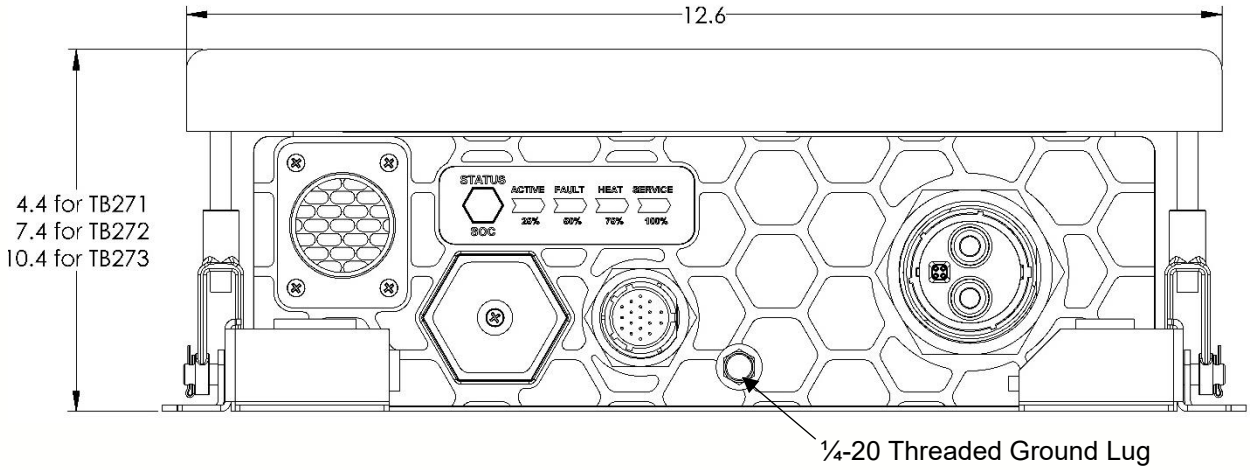

Figure 3.8
Hold-Down Mounting Features
(Front View)

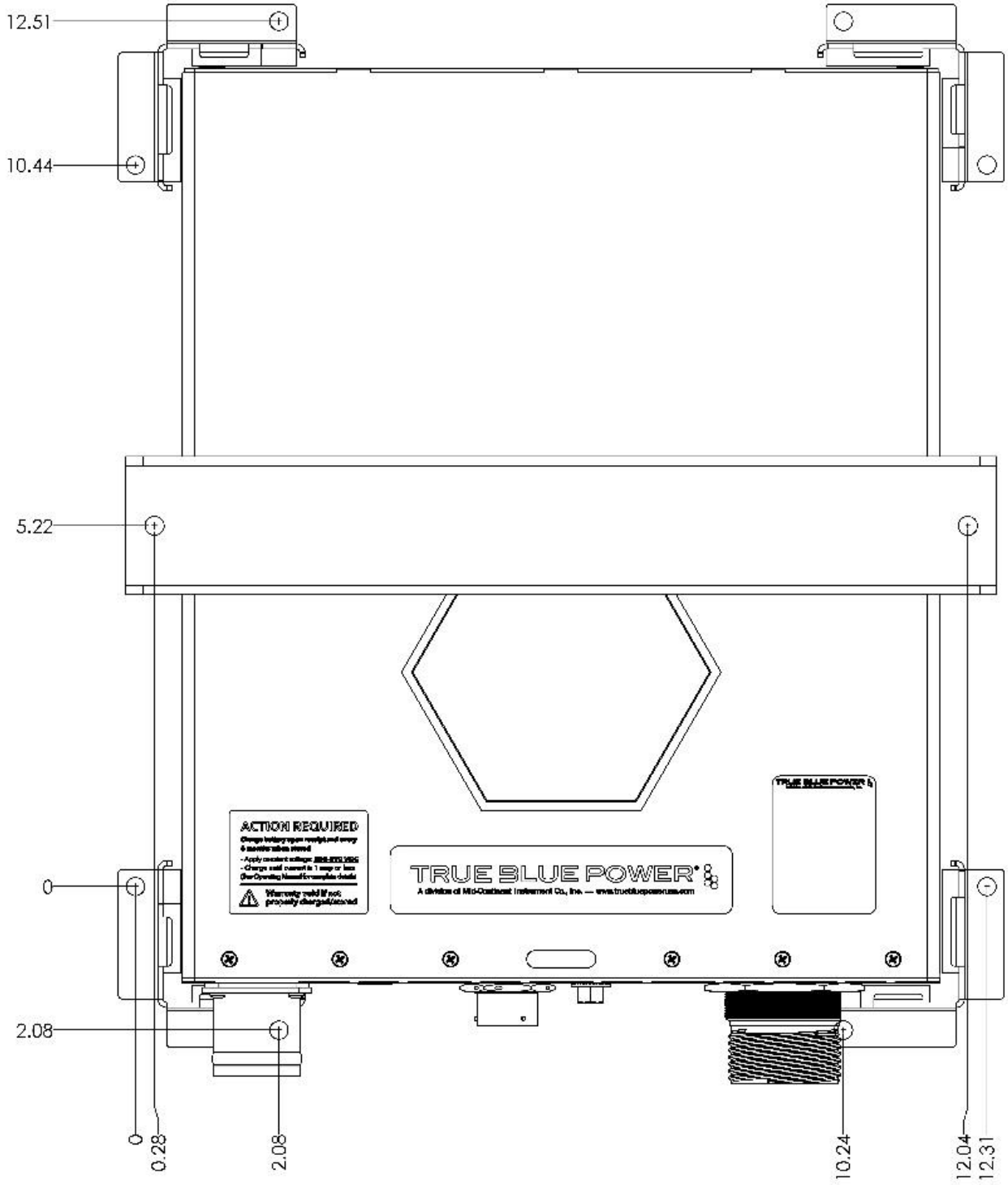

Figure 3.9
Hold-Down Mounting Features
(Top View)

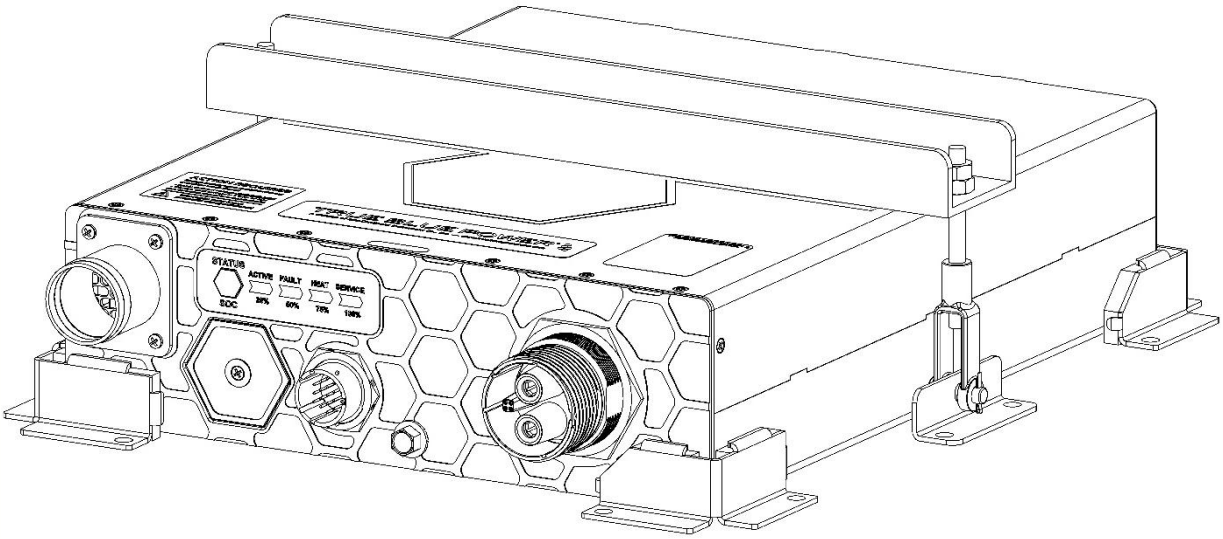

Figure 3.10
Hold-Down Mounting Features
(Isometric View)

The mounting kit (refer to Figure 3.10 below) includes four corner brackets with silicone pads (1) , a 1/16” compression pad that is installed on the bottom of the battery (2) with adhesive (3) and the “U” channel bracket with adhesive and silicone pad (4,5,6) with holes to fit a ¼” threaded bolt. The additional hardware attaching the “U” channel to a hold-down mounting provision are not included (e.g. threaded rod, locking nut, clevis fork/pin, “L” shaped base mounting bracket) as each installation has specific spacing requirements and hardware to complete battery mounting.

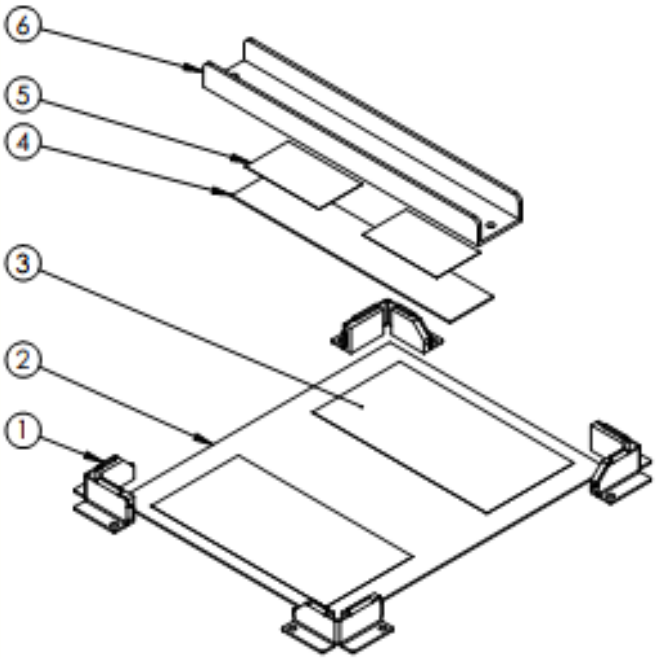

Figure 3.11
Hold-Down Kit Parts

3.4.4 Vent Installation

It is recommended that the battery be operated with the vent tube in place when installed in the aircraft. The vent port is either 1.25 inches (TB271) or 1.50 inches (TB272 and TB273) in diameter. The vent tube includes a rolled hose bead to prevent disengagement of an attached vent tube. See Figures 1.1 thru 1.3.

A Vent Kit is available that includes a high temperature vent hose and hose attachment hardware (see Section 3.3.2). Contact True Blue Power for potential alternatives. The vent tube should be properly and securely attached to an aircraft exit point which would allow any gaseous emissions to be vented overboard. The battery produces no emissions during normal operation. Emissions will only be present in the event of an internal cell failure. Be sure to locate the vent where emitted gases would not be directed toward any of the aircraft's air intake points.

3.4.5 Custom Programmable Parameters

The True Blue Power Advanced Lithium-ion Battery is designed with software control that provides the ability to configure it with custom parameters that are specific to the aircraft. This can only be done while the battery is not in flight and is in Control Mode (see 4.3.2).

Custom configuration parameters are loaded onto the unit using a standard USB 2.0 compatible flash drive (see Section 5.3.2). A fixed file format and file name with valid data parameters is required to be loaded onto the battery. Invalid file formats or data will be rejected and not allowed to load. Contact True Blue Power to coordinate parameter and file creation for your application.

The following parameters are available for configurable customization:

- Charge Current Limit

Setting the charge current limit restricts the maximum current that the battery is allowed to consume from the aircraft electrical bus. Because of the very low internal impedance of the battery, it can provide extremely fast charging and discharging at high current. For some aircraft that have limited electrical power available, or to manage power consumption at a known amount, a current limit may be desired.

Two Charge Current Limits are available to be programmed that provides flexibility to switch between a lower and higher charge current limit when commanded using a discrete input from the aircraft.

Setting the Charge Current Limit parameter(s) is not required. This parameter is set to zero (disabled) as the initial factory default. Disabling the Charge Current Limit(s) allows the battery to take up to its maximum charge current and charge as quickly as possible.

- End of Life

Setting an End of Life capacity provides an ARINC and discrete signal to indicate when the battery is approaching, or at End of Life and in need of replacement. This is based on a comparison of the programmed value with the battery's real-time capacity measurement. End of Life capacity is determined in accordance with the specific aircraft requirements at time of the battery installation certification. This is typically the minimum capacity required to provide power to critical aircraft systems for a particular period of time in the case of primary power generation loss.

The End of Life parameter can be set between 50-90% of the battery's original capacity in increments of 0.1 Ah. The End of Life capacity parameter and indication is not required. This parameter is set to zero (disabled) as the initial factory default.

- Minimum State of Charge (SOC)

Setting a Minimum SOC value provides an ARINC and discrete signal that validates the state of charge against the aircraft's specific required minimum for emergency operations. This is typically used to verify that the battery has been charged sufficiently prior to dispatch to support an emergency mission profile.

The Minimum SOC parameter can be set between 10-100% state of charge in increments of 1%. A Minimum SOC parameter and indication is not required. This parameter is set to zero (disabled) as the initial factory default.

- Engine Start

Setting the Engine Start parameter provides an ARINC and discrete signal that indicates that the required amount of energy and power, given the existing environmental conditions and state of the battery, is available to complete a full engine start. This indication is useful to avoid a potential 'hot start' with a turbine engine due to the battery depleting or exceeding its current limit before completing the start sequence.
There are two parameters available to define the Engine Start threshold. Coordinate with True Blue Power to determine the proper values based on specific engine start characteristics.

- The first Engine Start parameter is Start Energy required. If the battery has less energy than the programmed value, the Engine Start indication will activate (ARINC and discrete). Setting this parameter to 0 Wh bypasses evaluating the energy for an engine start.
- The second Engine Start parameter is Engine Start Peak Current required. If the temperature of the battery is too cold to reach the programmed peak current value, the engine start indication will activate (ARINC and discrete). Setting this parameter to 0 Amps bypasses evaluating the maximum current required for an engine start.

The Engine Start parameters are not required to be programmed. This parameter is set to zero (disabled) as the initial factory default.

3.4.6 Event Log

The True Blue Power Advanced Lithium-ion Battery is designed with software features providing downloadable event logging capability which captures fault and failure events as well as high current discharges typically occurring during engine starts. The event log can capture a minimum of 9,500 time stamped events available for downloading to a USB 2.0 compatible flash drive. If the number of events exceeds the maximum number of events, then older events are overwritten. Downloading events can only be done while the battery is not in flight and is in Control Mode (see Section 4.3.2).

To download the event log onto a USB flash drive, follow instructions in Section 5.3.4. Contact True Blue Power for further details with respect to the event log.

SECTION 4 OPERATION

4.1 DESCRIPTION

The True Blue Power TB270 series Advanced Lithium-ion Batteries are designed to supply power for starting an aircraft engine and providing emergency backup power to aircraft systems in the event of primary power generation loss. It utilizes rechargeable Nanophosphate lithium-ion cells in a parallel and series configuration to provide the specified voltage, power and total energy capacity. The unit supplies power through a connector with positive and negative power terminals and provides battery status and communication through an 18-pin circular connector (-1 units) or a 26-pin connector (-2 units).

4.2 CONSTRUCTION AND THEORY OF OPERATION

4.2.1 Cells

The TB270 Advanced Lithium-ion Battery consists of individual cylindrical lithium-ion cells connected together electrically to produce the total output voltage and current. Lithium-ion battery cells have a very high energy density, producing more capacity than comparable battery types in a significantly lighter package. The cells in the TB270 are a high-performance Nanophosphate chemistry that is a proprietary form of lithium iron phosphate ($LiFePO_4$). The lithium iron phosphate chemistry provides safety enhancements over alternative lithium technologies by producing a cell that is more abuse tolerant to external conditions like over-charge or short circuit. It has a very low self-discharge rate, high cycle life, and is more stable with significantly less-energetic failure modes. The Nanophosphate advantage enhances typical lithium iron phosphate chemistries by providing exceptional power and energy. The combination of these characteristics makes it an excellent choice for use in aircraft applications where high power, less weight, and enhanced safety are of utmost importance.

At a full, rested charge, each cell supplies approximately 3.3 VDC and can (for a short period) provide up to 120 amps of current and 2.5 amp-hours of energy, or capacity.

4.2.2 Battery Modules

The TB270 family of batteries is comprised of one through three identical battery modules (TB271, TB272 and TB273, respectively), which in turn each contain two sub-modules. In each sub-module, forty (40) individual cells are connected in series, along with two heaters, a circuit board, and structural mounting plates to safeguard the cells against an aircraft environment. Two sub-modules are then connected together in series, for a total of eighty (80) cells per module. When connected as described above, each module is rated to provide 120A of peak power and a capacity of 2.5 amp-hours at a nominal 264VDC. When additional modules are connected in parallel (TB272 and TB273), the battery provides a maximum 240A of peak power, 5.0Ah of capacity (TB272) and 7.5Ah of capacity (TB273).
The two circuit boards per sub-module connect to the cells to monitor voltage and contain multiple temperature sensors. These signals are then reported to the Control board for balancing, protections, status and health.

4.2.2.1 Control Board

There is one Control board per module. The Control board contains the logic to collect cell parameters and balance the cells at top of charge. It then reports the monitored parameters to the Battery Management System (BMS). It also receives decisions back from the BMS and sends information to the Switch board to enable, limit, or disable charging and discharging. The control board also provides module status and health to the BMS.

4.2.2.2 Switch Board

There is one Switch board per module. The Switch board incorporates high-power transistors used to enable and disable charging or discharging of the unit. This allows for the unit to take action based on its own monitoring and protections to prevent damage to the cells. The Switch board also contains the current limiting functionality. This important feature allows the battery to control the amount of current it will accept from aircraft. Although the very low internal impedance of lithium-ion cells produces benefits of fast charging and high power, it also can accept as much or more than many aircraft power generation systems can supply. The current limiting feature prevents the unit from utilizing the full available power of the aircraft so that other key systems can remain active. The Switch board also includes the unit's ability to measure current flow of the battery as a protective input.

4.2.3 Battery Management System (BMS)

There is a single BMS board per battery that manages the power control and external data interface of the unit. Using cell and battery conditions passed to it by the Control board, the BMS microcontroller and software provide instructions back to the Control board, and through it, the Switch boards, to control the battery. The software logic monitors the battery functions and provides protections for conditions such as short circuit, over-temperature, over-discharge and others. It also controls the internal heaters. The BMS generates battery status and data that is provided to the aircraft through the 18-pin (all -1 units) or the 26-pin (all -2 units) communication connector for cockpit monitoring. Data is provided in serial (ARINC 429), discrete, and analog formats. The BMS provides the logic that operates the built-in/on-board visual status indicator on the outside of the case and stores the internal data log for diagnostics as well.

The software is not yet qualified to RTCA/DO-178C, Design Assurance Level A (DAL A). The battery contains no airborne electronic hardware, known as AEH or complex hardware.

4.2.4 Resistance Temperature Detectors

There are two, 100Ω Resistance Temperature Detectors (RTDs) in the -1 units that supply direct analog resistance through four pins on the 18-pin connector for temperature monitoring independent of the software function. The -2 units include up to three 1000Ω RTDs (1 per module) that supply direct analog resistance through 6 pins on the 26-pin connector. Refer to Tables 3.2 and 3.2 for those connector pin locations. See Section 4.4.1 for additional details.

4.2.5 Case and Hardware

The mechanical construction plays a key role in the design to specifically support optimal functionality, mitigate and contain any potential failure, and withstand the expected aircraft environment. Material selections, component design, assembly processes and test all contribute to the performance and safety of the product.

Nickel bus bars are used to connect the individual cells within the modules. Larger bus bars then connect each sub-module to each other and to the main connector to deliver the battery power. Thermal and electrical insulating materials are used to support the cells within the modules and to isolate all internal surfaces from the metal case. The Switch board for each module uses an aluminum heat sink that connects to the case for thermal management, particularly during charge current limiting and high discharges. A threaded connection is provided for convenience to ground the battery to the airframe. A nylon handle is used for ease of transport and handling on the TB273 units.

The case is constructed to address the unique needs of lithium technology. In particular, it is designed to contain and direct emitted gases overboard, maintain a safe external temperature and pressure, constrain any debris or flame and ultimately to prevent any effect on its surroundings in the aircraft, even during a worst-case failure scenario.

4.2.6 Visual Status Indicator

The batteries have built-in/on-board status indicator incorporated into the front face of the battery. This can be used to quickly and visually determine the battery's status and state of charge either on the aircraft or off, during storage or service. The status indicator will identify any of the following states: ACTIVE, FAULT, HEAT, and/or SERVICE. It can also be used to assess the state of charge. More details can be found in Sections 4.3 and 4.4.

4.2.7 Data Exchange Access

The front face of the -1 versions of the TB270 batteries have a sealed hexagonal access cover below the main power connector, secured with a single screw. When removing the cover, it reveals access to a USB Type-A port, a recessed service button, and a service light. These can be used in Control Mode to update the battery software, configure its customizable parameters, validate the custom parameters and download the event log. The -2 versions of the TB270 batteries do not have the USB Type-A port directly on the unit; the required USB data and power connection pins are present within the 26-pin communications connector. A cable can be constructed to include a USB Type-A receptacle (refer to Table 3.3 and Figure 3.6). Additional details regarding data exchange access can be found in Section 5.3.

4.3 OPERATIONAL MODES

The battery has three basic modes of operation: Sleep Mode, Control Mode, and Active Mode. These modes, and associated functionality, are explained below. If the mating Power Connector is not installed and pins D and E are not shorted (connected) together, the battery will be off; no power is provided to the BMS for operation without this connection.

4.3.1 Sleep Mode

Sleep Mode is used to disable the power output of the battery and reduce internal energy consumption to preserve resting state of charge. When the battery is in Sleep Mode, the battery is not charging or discharging, the internal battery heaters are inactive, all active communications are disabled, and internal energy consumption is reduced by 90% with respect to Active Mode.

4.3.1.1 Sleep Mode for -1 Units

The battery is capable of monitoring the terminals for an external load or charge and the external control discrete inputs (battery disable and heater disable) while in Sleep Mode.

The battery will enter Sleep Mode when the BATTERY DISABLE control discrete is engaged (closed), when the battery is inactive or when the STATUS/SOC button is held for 3 seconds.
The battery is inactive when all of the following conditions are true:

- Internal battery voltage is less than 275 VDC (unless STATUS/SOC button is held for 3 seconds while in Active Mode)
- Five minutes after:
  - No charge or discharge (<400mA)
  - No protections actively being applied
  - Pre-heat cycle is off

4.3.1.2 Sleep Mode for -2 Units

The battery will remain in Sleep Mode unless the BATTERY ON discrete input is grounded (refer to Figure 3.6). Once the BATTERY ON discrete input is opened, it will revert to Sleep Mode, disabling charge and discharge capability

4.3.2 Control Mode

Control Mode is reserved exclusively for the following interactions with the battery:

- Battery Software Update
- Installing Custom Programmable Parameters
- Downloading Custom Programmable Parameters
- Downloading Event Log

Control Mode is not available or accessible in flight. In order to enter Control Mode, the battery must not be charging or discharging.

Additional information regarding the customization of the configuration parameters can be found within Section 3.4.5. Information regarding software updates, custom programmable parameters and event log can be found in Section 5.3.

4.3.2.1 Control Mode for -1 Units

For -1 units, to enter control mode, the service button must be pressed, and a valid USB flash drive must be present in the USB port (see Figure 5.1 in Section 5.3).

4.3.2.2 Control Mode for -2 Units

For -2 units to enter control mode, the battery must be in Sleep Mode, meaning the BATTERY ON discrete input must be open. A cable connected to the 26-pin communications connector, with specific connections (pins T (VBUS), A (USB DM), B (USB DP) and c (Ground) can be made to support a USB Type A receptacle to accept a valid USB flash drive. The USB flash drive must be present in the USB Type A receptacle and the Status Button must be pressed and held for 3-5 seconds until the Active LED flashes white to enter control mode.

4.3.3 Active Mode

In Active Mode, the battery is fully functional and available to provide power barring no protections are being enforced and the battery is operating properly. In Active Mode, the battery continuously monitors all cells and battery conditions to manage operation and mitigate exceedances as needed through its various protection methods. Data and status are available through the communication connector and the heater is available in cold conditions while in Active Mode. Each major function available during Active Mode is described in further detail below.

The following figure and table summarize the transitional conditions between the Sleep Mode, Active Mode, and Control Mode.

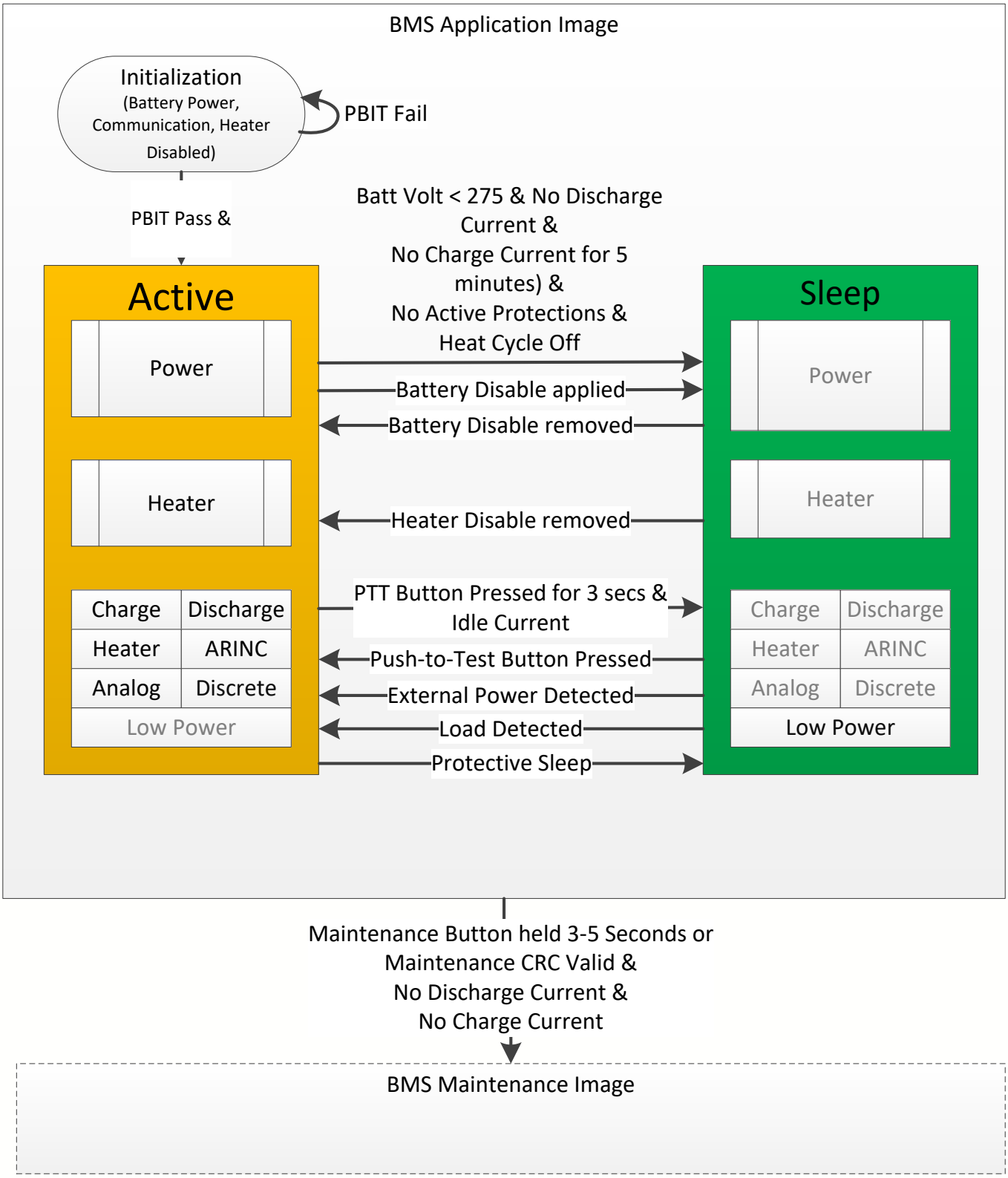

Figure 4.1
Operational Modes State Diagram (-1 Units)

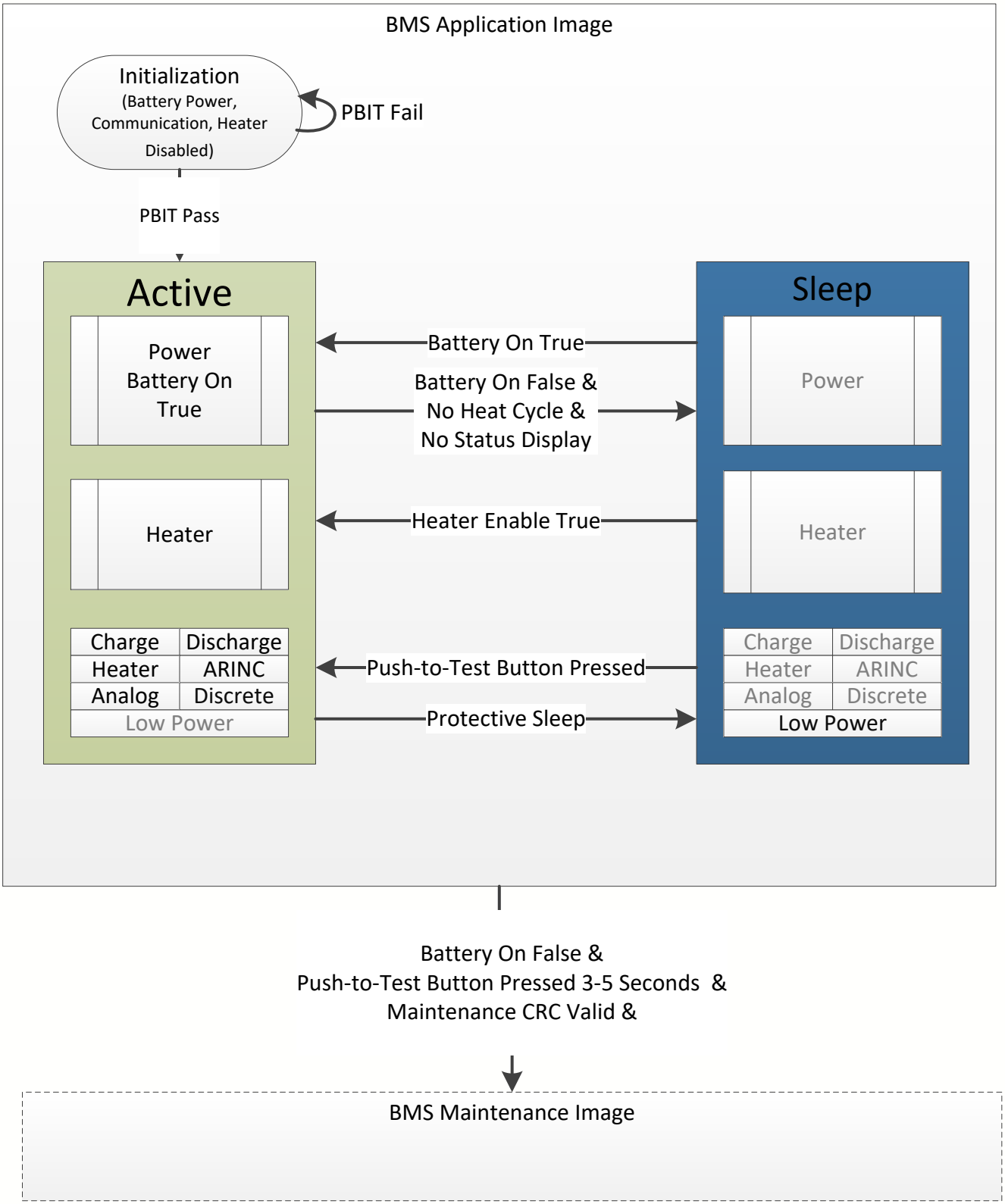

Figure 4.2
Operational Modes State Diagram (-2 Units)

4.3.3.1 Engine Start

The TB270 batteries can provide a maximum current of either 120A (TB271) or 240A (TB272 and TB273) for the purpose of aircraft APU starts, engine starts or similar loads. This level of current can be provided for as many as 15 seconds, at which point the current must fall below 70A (TB271), 140A (TB272) or 210A (TB273) until the battery reaches its over-temperature protection limit, or end of discharge, which occurs first. The low internal impedance of the Nanophosphate lithium-ion chemistry allows extremely high current delivery while maintaining higher voltage than traditional battery types. This equates to a higher total power delivery, producing quicker, stronger starts, lower engine temperatures, more start attempts when needed, and a higher remaining battery capacity following engine start. The higher voltage also means better power quality to supporting systems during an engine start.

4.3.3.2 Providing Aircraft Power

When the aircraft's power generation systems are offline or fail, the unit will provide immediate power to the equipment/loads on the associated power bus. As the unit's capacity is used, the voltage will begin to drop until the unit is fully depleted. A fully charged unit will initially provide approximately 264VDC. Depending on the load, the battery will provide an average of approximately 255 volts for the duration of discharge. See Section 4.5. for more details on available capacity.

In order to avoid depleting the unit's power and ensure availability for the next flight, be sure to turn off all aircraft systems, lights and accessories after a flight. The -1 batteries can also be turned off using the BATTERY DISABLE input, whereas the -2 batteries require opening the BATTERY ON discrete input. If the unit is depleted, see Section 5.4.2 for charging instructions.

4.3.3.3 Maintaining Charge

After engine start, the unit recharges and maintains charge by accepting power from the aircraft power generation system. The battery can be customized to set the charge current limit such that the battery will only draw a pre-determined maximum amount of current from the aircraft bus. The time required to replenish the capacity of the battery is a function of the depth of initial discharge and the value of the current limit. See Section 3.4.5 for more details on the configurable current limit feature.

At maximum charge current, a fully depleted battery can be recharged to 95% SOC in less than 15 minutes. In typical applications, the unit is likely to be fully recharged from the aircraft power generation system within several minutes following an engine start.

4.3.3.4 Heating

The battery is designed to support an engine start from as low as -5°C (23°F), depending upon the engine start profile, without pre-heat required. Below this temperature, the performance of the unit begins to decrease in current and energy delivery as the electrolyte in the cells begins to thicken and the internal impedance increases to retard ion flow. To address this, each 2.5Ah module contains 4 independent heaters which are powered by the cells themselves, even at very low temperatures. If the battery is active, energy can be provided by external sources (e.g. ground power) to heat the battery without relying on the discharging energy from the battery itself. In all cases during heating, the battery will activate heaters when the battery temperature is sensed below 0°C and will stop heating when the internal battery temperature is above 5°C. When the heaters are active, they consume approximately 180W each for a total of 720W per module.

Heating for -1 Units:
Heaters are available at all times when the battery is both in Active Mode and when the BATTERY DISABLE and HEATER DISABLE signals are off/inactive. The heaters will automatically turn on and off as needed until the battery enters Sleep Mode or the HEATER DISABLE signal is engaged. When the heaters are active, they consume approximately 180W each for a total of 720W per module.

Heating for -2 Units:
Heaters are available at all times when the battery is in Active Mode. The -2 battery operates differently from -1 units. If the battery is not on (BATTERY ON discrete input not enabled), the battery will enter Pre-Heat Cycle (see below Section 4.3.3.5 for more details) when the HEATER ENABLE pin is toggled (seeing a transition from closed to open). In that case when the battery enters Pre-Heat Cycle, it will heat the battery as needed. As the BATTERY ON input is not engaged, the battery will only self-heat and will not accept a charge nor provide a discharge during the Pre-Heat Cycle. If, during the Pre-Heat Cycle the HEATER ENABLE pin is toggled, it resets the Pre-Heat Cycle timer. If/when the battery is turned on (BATTERY ON discrete input), the Pre-Heat Cycle is discontinued; the heater will heat when required whenever the Battery is On/Active. The heaters will automatically turn on and off as needed until the battery enters Sleep Mode by disengaging the BATTERY ON discrete input.

4.3.3.5 Pre-Heat Cycle

The battery has the ability to pre-heat at temperatures down to -40°C (-40°F) utilizing the internal, self-powered heaters, bringing the battery up to full operational capability. Pre-heat time will vary depending on temperature but can be fully warmed in 15 minutes or less after turning the heaters on. (See Section 4.5 for more details on pre-heat times and energy use). The Pre-Heat Cycle will heat the battery as needed for one hour.

The battery transitions to Active Mode and the ACTIVE green LED on the Status Indicator blinks once every three seconds when in the Pre-Heat Cycle .

Pre-Heat Cycle for -1 Units:
The Pre-Heat Cycle can be initiated in one of two ways:
(BATTERY DISABLE signal, if installed, must not be engaged/closed)

- From Sleep Mode press the STATUS/SOC button.
- Toggle the HEATER DISABLE signal from open > closed > open.

The Pre-Heat Cycle will continue to maintain the battery temperature for one hour, and then enter Sleep or Active Mode (per 4.3.1, 4.3.3), unless one of the following occurs:

- Press and hold the STATUS/SOC button for 3 seconds.
  Battery will immediately transition to Sleep Mode if the battery is not charging or discharging.
- Close/ground the HEATER DISABLE signal (if installed).
  If the Pre-Heat Cycle has been active for less than 5 minutes, the HEAT yellow LED will be on until the battery enters Sleep Mode (4.3.1).
  If the Pre-Heat Cycle has been active for more than 5 minutes, it will immediately transition to Sleep Mode.
- Close/ground the BATTERY DISABLE signal (if installed)
  Battery will immediately transition to Sleep Mode.

Pre-Heat Cycle for -2 Units:
The Pre-Heat Cycle can be initiated when the battery is not in Active Mode (meaning BATTERY ON discrete input is open):

- Toggle the HEATER ENABLE input from open > closed > open. The Pre-Heat Cycle is initiated upon the input transition from closed to open.

The Pre-Heat Cycle will continue to maintain the battery temperature for one hour, and then enter Sleep mode (see Section 4.3.1), unless one of the following occurs:

- If the HEATER ENABLE input is toggled again, it will reset the heater timer (for one hour)
- If the BATTERY ON discrete input is closed, the Pre-Heat Cycle will be discontinued. However, whenever the battery is on (Active Mode) the heater will turn on whenever needed. Once the BATTERY ON discrete input is open, the battery will transition to sleep mode.

4.3.3.6 Battery Protections

The TB270 series Advanced Lithium-ion Battery has built-in protections for conditions that may exceed specified operating limits as listed below. Note that each module is independently controlled and may be enabled or disabled according to its own conditions. The TB271 contains one module, whereas the TB272 and TB273 contain 2 and 3 modules, respectively.

Protection	Module Parameter(s)	Action	Module Recovery
Under Voltage (low current)	If discharge current < 4C rate and battery voltage < 160VDC or any cell voltage < 1.8VDC (e.g. TB271 current < 10A ; TB272 current < 20A)	Discharging disabled	Voltage > 200VDC and all cell voltages > 2.5VDC (Charging limited to 0.2A per module until conditions are met)
Under Voltage (high current)	If discharge current > 4C and battery voltage < 120VDC or any cell voltage < 1.0VDC	Discharging disabled	Voltage > 200VDC and Cell voltage > 2.5VDC (Charging limited to 1A/Module until conditions are met)
Over Discharge	Any cell voltage < 1.2VDC and current < 100mA for 10 seconds	Module is disabled	Factory Service
Over Voltage	Module voltage > 306VDC, or any cell voltage > 3.8 VDC	Charging disabled	Voltage < 292 VDC and all cell voltages < 3.6 VDC
Over Current	Battery discharges > 70A per module for more than 15 seconds	Discharging disabled	External Load removed or charging current detected
Short Circuit	Battery detects current > 120A for > 5ms (TB271) or current > 240A for > 5ms (TB272/TB273)	Discharging disabled	External Load removed or charging current detected
Over Temperature (Discharging)	Any cell temperature > 95°C or Discharge control circuitry >130°C	Discharging disabled	All cell temperatures < 80°C and Discharge control circuitry < 90°C
Over Temperature (Charging)	Any cell temperature > 72°C or Charge control circuitry >130°C	Charging disabled	All cell temperatures < 62°C and Charge control circuitry < 90°C
Cell Over Temperature Fail	Any cell temperature > 110°C	Module is disabled	Factory Service
Module Charge Required	One or more modules have charged/discharged 12.5Ah or more without being fully recharged	Battery SOC may not be accurate	Fully Charge Battery

Table 4.1
Battery Protections

4.4 BATTERY COMMUNICATION

When in Active Mode, the Advanced Lithium-ion Battery presents multiple status indications and data to the aircraft for display and monitoring on appropriate systems. These are supplied as either serial, discrete, or analog signals. The various outputs and their definition are supplied in Sections 4.4.1 through 4.4.3. Locations and descriptions of each pin of the (-1 battery) 18-pin communications connector are listed in Table 3.2 and Figure 3.2. Similarly, for each pin of the (-2 battery) 26-pin communications connector are listed in Table 3.3 and Figure 3.3.

The battery also provides an on-board status indicator that can be used on- or off-aircraft to determine current health and state of charge; see Section 4.4.4.

4.4.1 Analog Communication Signals

The battery provides two pieces of data via analog outputs. These are temperature data from the dual, independent RTDs (Resistance Temperature Detector) and analog state of charge. The analog state of charge is only available on -1 units.

4.4.1.1 RTDs for -1 Units

For the TB271-1 unit, only one RTD is present (pins F & G). For TB272-1 and TB273-1, two RTDs are present. Each RTD has a resistance of 100 ohms at 0°C. Resistance (ohms) for all temperatures (T, in degrees Celsius) can be calculated using the following formula(s):

(per specification) Resistance = $100 \times [1 + (0.00390833 \times T) + (-0.00000057753 \times T^2)]$
(linear approximation) Resistance = $(0.385 \times T) + 100$
(temp from resistance) Temperature = $(R - 100) / 0.385$

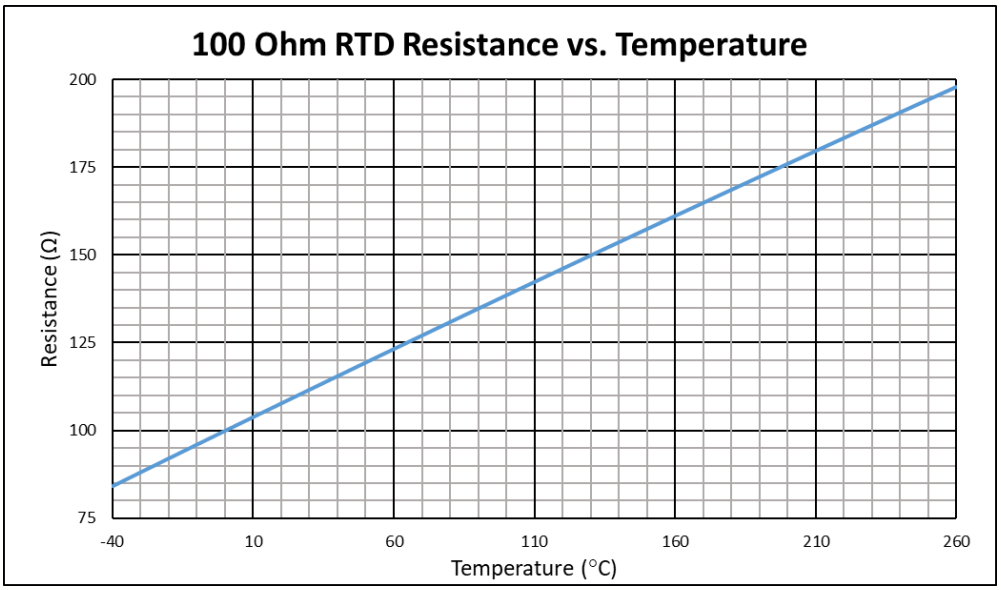

Figure 4.3
100 Ω RTD Resistance vs. Temperature Figure

4.4.1.2 RTDs for -2 Units

For the TB272-2 unit, two RTDs are present (pins K, L, M, N). For TB273-2 batteries three RTDs are present. Each RTD has a resistance of 1000 ohms at 0°C. Resistance (ohms) for all temperatures (T, in degrees Celsius) can be calculated using the following formula(s):

(per specification) Resistance = 1000 x [1 + (0.00390833 x T) + (-0.00000057753 x T^2)]
(linear approximation) Resistance = (3.85 x T) + 1000
(temp from resistance) Temperature = (R – 1000) / 3.85

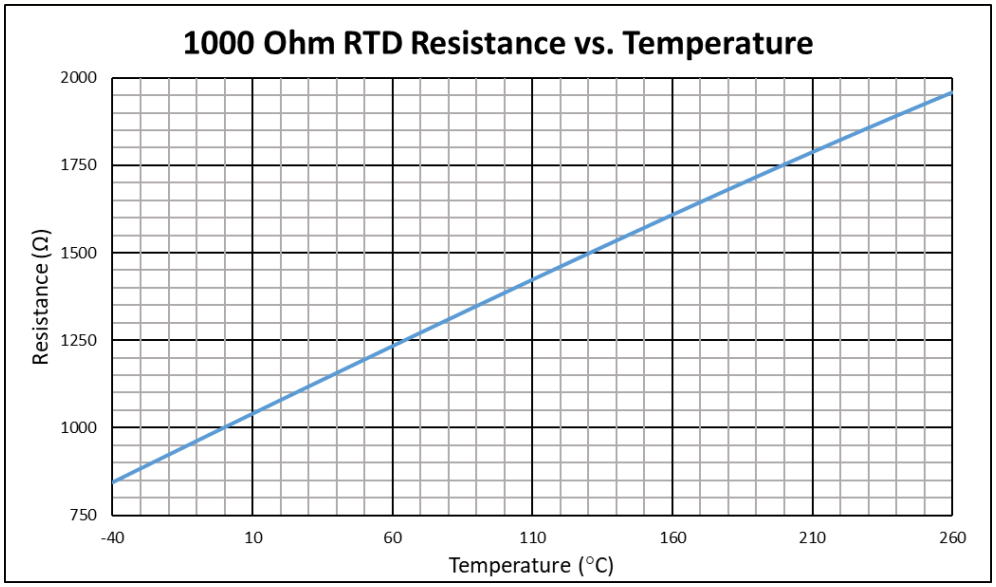

Figure 4.4
100 Ω RTD Resistance vs. Temperature

The battery also provides the state of charge as an analog output (only on -1 units). The state of charge of the battery is represented from 0 to 100% as 0 to 5VDC. This signal can be used to drive either a digital or mechanical indication of the state of charge in lieu of the serial communication signals if preferred. The voltage reference is between Pin A ('Analog SOC') and Pin N ('Analog Ground') of the 18-pin communications connector.

4.4.2 Discrete Communication Signals

Discrete signals are available to provide both basic battery status and simplified indication of battery readiness specific to the aircraft's requirements. In some cases, where serial data cannot be integrated with the aircraft's avionics or other messaging systems, the discrete battery status signals can be used to meet minimum regulatory annunciation requirements for lithium batteries.

Each discrete output is normally open and provides an active low/ground when the condition is true as described below. The circuit consists of a MOSFET connected to the battery negative (ground) with a series resistance of 60Ω. Each pin is current limited to 50mA.

Discrete Communication Signals	
Heating	Active when the Heater is providing heat. For -1 it is Active GND/Open and for -2 it is Active 28V/Open.
Fault	Active when the battery has an internal fault. Internal faults may be temporary and may result in partial or fully degraded functionality. Faults may clear with time or upon next usage. Verify battery health and availability by cross-checking other parameters (voltage, state of charge, etc.). Active GND/Open for both -1 and -2.
Service	Active when the battery has a permanent fault. Service faults may result in partial or fully degraded function. Verify battery health and availability by cross-checking other parameters (voltage, capacity, state of charge, etc.). Battery should be submitted for service in accordance with the aircraft's flight manual supplement. Active GND/Open for both -1 and -2.
Minimum SOC (-1 units only)	Active when the battery has determined that its state of charge is BELOW the value programmed according to the aircraft's customizable configuration parameters.
Engine Start (-1 units only)	Active when the battery has determined that its available energy is NOT sufficient to fully complete an engine start. The requirements to complete an engine start must be programmed according to the aircraft's customizable configuration parameters.
Battery On (-2 units only)	Active when the battery is turned on via the Battery On discrete input. Active 28V/Open
Battery Active (-2 units only)	Active when the battery is turned on via the Battery On discrete input. Active Ground/Open

Table 4.2
Discrete Output Definitions

4.4.3 Discrete Input Signals

There are several discrete inputs as described below. All are normally open and are required to be grounded to activate the function described

- Battery Disable (-1 only): This input, when grounded, manually and fully disables the battery, including power and communication.
- Heater Disable (-1 only): This input, when grounded, manually disables the heaters from operating.
- Charge Current Limit: This input, when grounded, switches charge current limiting from Setpoint 1 to Setpoint 2.
- Battery On (-2 only): This input, when grounded, transitions the battery from sleep to active mode.
- Heater Enable (-2 only): This input, when transitioning from grounded to open starts heat cycle.

4.4.4 Serial Communication Signals

The battery generates a sophisticated array of situational status and data available for real-time reporting and awareness. This is provided to the aircraft in the form of serial data using the ARINC 429 protocol. Below is the definition of the data the battery provides. Contact the manufacturer to receive additional details associated with the format of the data provided for each label.

ARINC 429 Parameter Descriptions		
Label	**Parameter Name**	**Definition**
271	Battery Discrete Outputs	Provides equivalent serial representation of the previously defined Discrete Communication Signals described in 4.4.2.
340	DC Current	Amperage being supplied (discharge (+)) or accepted (charging (-)).
337	DC Voltage	Voltage at the battery terminals.
342	Battery Temp	Internal temperature of the battery (°C).
343	Deliverable Energy	Amount of energy the battery can currently deliver at a 1C rate. Deliverable Energy is defined as State of Charge (%) x Current Maximum Capacity. • Example: A TB272 has aged, and its current maximum capacity is 4.8Ah, instead of its original beginning-of-life 5Ah. If its current State of Charge is 80%, then: Deliverable Energy = 80% x 4.8Ah = 3.84Ah.
344	Capacity	Current maximum capacity of the battery. This is the real-time tracking of the battery's capacity that decreases over time with age and use.
345	State of Charge	Total amount of charge the battery has, in relation to its capacity (%).
346	Life Remaining	Percent of capacity left before the battery's capacity reaches the programmed End of Life. • Example: A TB272 has been programmed for End of Life of 3.5Ah for a given aircraft. The current capacity, due to aging, is now 4Ah, then: Life Remaining = (4Ah – 3.5Ah) / (5Ah – 3.50Ah) = 0.5 /1.5 = 30%.
350	Software Version	Loaded software version presented as X.Y.Z (Example: 1.0.1).
351	Operational Status	Provides three discrete states: Charging, Charge Limiting, Discharging.
352	Fault Status	Provides discrete indication of any active faults (see next page).
377	Equipment ID	ARINC defined equipment identifier: 0B3.

Table 4.3
ARINC 429 Label Definition

ARINC 429 Label Format Definition								
Label	Parameter Name	Data Type	Range	Units	Sig Bits	Resolution	Transmit Interval (ms)	
							Min	Max
271	Battery Discrete Outputs	DISCRETE	-	-	-	-	250	500
337	DC Voltage	BNR	512	V	18	0.001953	50	100
340	DC Current	BNR	± 4096	A	18	0.015625	50	100
342	Battery Temperature	BNR	± 512	C	12	0.125	1000	2000
343	Deliverable Energy	BNR	512	Ah	13	0.0625	1000	2000
344	Capacity	BNR	512	Ah	13	0.0625	1000	2000
345	State of Charge	BNR	128	%	11	0.0625	1000	2000
346	Estimated Life Remaining	BNR	128	%	11	0.0625	1000	2000
350	Software Version	DISCRETE	X.Y.Z	-	-	-	1000	2000
351	Operational Status	DISCRETE	-	-	-	-	500	1000
352	Fault Status	DISCRETE	-	-	-	-	500	1000
377	Equipment ID	DISCRETE	-	-	-	-	1000	2000

Table 4.4
ARINC 429 Label Format

Fault Status Indications for ARINC Label 352:

- Invalid Configuration
- Stack Over Voltage
- Cell Over Voltage
- Charge Cell Over-temp (Disable Charging)
- Over Current
- Short Circuit
- Cell Under Voltage
- Stack Under Voltage
- Discharge Cell Over-temp (Disable Discharging)
- FET Over-temp
- Continuous BIT Fault
- Continuous BIT Failure
- End of Life
- Over-Discharge
- Heater Fault
- Heater Fail
- Module Charge Required
- Cell Imbalance Fail
- Cell Over Temperature Fail
- Communication Fault
- EEPROM Configuration Fault

4.4.5 On-board Status Indicator

The on-board Status Indicator can provide on-demand health status and state of charge. It can also be used to manually transition the battery from Sleep Mode to Active Mode by pressing the STATUS button. This can be used to check status, state of charge, or to initiate the heaters to pre-heat the battery (if the battery is cold).

When the battery is in Active Mode, status is continuously displayed. Status is listed as one or more of four states as listed below. For each state, a lighted chevron will appear under the associated label on the Status Indicator. Note that the gray chevrons in Figure 4.3 are not visible (black) on the Status Indicator until a lighted annunciator segment is active.

- Active — Solid Green indicator: Battery is Active.
  (-1 only): Flashing Green indicator: Battery is in Pre-Heat Cycle.
- Fault — Solid Yellow indicator: Battery has an internal fault. A fault is also communicated through both the discrete fault signal and via ARINC. See Section 4.4.3 for further description.
- Heat — Flashing White indicator: Battery heaters are currently heating.
  Solid Yellow indicator: Heater is disabled.
- Service — Solid Red indicator: Battery has a permanent fault. A service fault is also communicated through both the discrete service signal and via ARINC. See Section 4.4.3 for further description.

The Status Indicator can also provide on-demand state of charge. By temporarily pressing the STATUS/SOC button, the chevrons will quickly cycle in blue, indicating a change to state of charge indication. The Status Indicator will display nine different state of charge ranges for approximately six seconds as described below in Table 4.5. See 4.4.4.1 for additional functions of the STATUS/SOC button.

State of Charge	Indicator 1 "25%"	Indicator 2 "50%"	Indicator 3 "75%"	Indicator 4 "100%"
0 - 10 %	Flash Yellow	Off	Off	Off
10 - 15 %	Dim Green	Off	Off	Off
15 - 25 %	Solid Green	Off	Off	Off
25 - 40 %	Solid Green	Dim Green	Off	Off
40 - 50 %	Solid Green	Solid Green	Off	Off
50 - 65 %	Solid Green	Solid Green	Dim Green	Off
65 - 75 %	Solid Green	Solid Green	Solid Green	Off
75 - 90 %	Solid Green	Solid Green	Solid Green	Dim Green
90 - 100 %	Solid Green	Solid Green	Solid Green	Solid Green

Table 4.5
State of Charge Indication

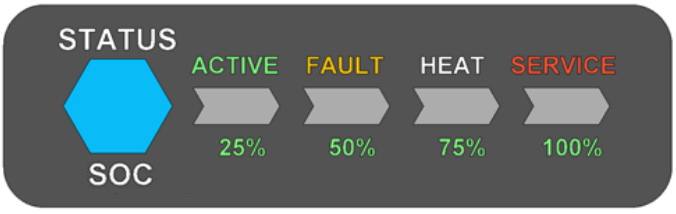

Figure 4.5
On-Board Status Indicator

4.4.5.1 STATUS/SOC Button For -1 Units

Pressing the STATUS/SOC Button serves several purposes.

- From Active or Sleep Mode:
  - Cycles the chevrons in blue, followed by the state of charge (SOC) indication, followed by continuous display of the Status indication.
  - Initiates a self-test of all battery discrete outputs which are set to active for 10 seconds.
  - If the battery has reached the end of discharge and under-voltage protection is activated, pushing the status button will clear the under-voltage fault (if battery voltages meet under voltage recovery limits as indicated in Table 4.1) and allow further discharge
- From Sleep Mode (in addition to above):
  - Places the battery into Pre-Heat Cycle.
- From Active Mode, when pressing and holding for three seconds:
  - Transitions to Sleep Mode
    - If the battery is charging or discharging, it will blink the ACTIVE green LED and then remain Active (not enter Sleep Mode).

4.4.5.2 STATUS/SOC Button For -2 Units

Pressing the STATUS/SOC Button serves several purposes.

- From Active Mode:
  - Cycles the chevrons in blue, followed by the state of charge (SOC) indication, followed by continuous display of the Status indication.
  - Initiates a self-test of all battery discrete outputs which are set to active for 10 seconds.
  - If the battery has reached the end of discharge and under-voltage protection is activated, pushing the status button will clear the under-voltage fault (if battery voltages meet under voltage recovery limits as indicated in Table 4.1) and allow further discharge
- From Sleep Mode
  - Press and hold the STATUS/SOC Button for 3-5 seconds until the ACTIVE LED blinks white will transition the battery to control mode (see Section 5.3).

4.5 PERFORMANCE

4.5.1 Capacity

Capacity is the measurement of the energy stored in the battery and most often is used to determine the length of time a particular electrical load can be operated. A standard measure of rechargeable battery capacity is the current-over-time performance (measured in amp-hours) called the “C” rate.

The C-rate is a function of the size of the load in relation to the capability of the battery. A 1C rate corresponds to a constant current load (in amps) which the battery can supply for one hour. The TB270 has a 1C rating of either 2.5Ah or 5.0Ah and thus can supply 2.5A or 5.0A for one hour. Note that many typical lead-acid batteries, and some lithium systems as well, are defined at a 1/20th (0.05) or 1/5th (0.2) C-rate. This is defined as the constant load that can be applied over 20 or 5 hours, respectively. For example, a lead-acid battery rated at 5Ah at a 0.2 C-rate can deliver 1A for 5 hours (5A x 1 hours = 5Ah). However, that same system typically does not perform linearly at higher C-rates. For instance, the same 5A lead-acid battery rated at 0.2C may typically only support a 5A load for 45 minutes, not a full hour, resulting in a true 1C capacity of only 3.75Ah. The capacity for these types of batteries is generally defined by a logarithmic function of load versus time. So, when doubling the load, a lead-acid battery will last less than half the time.

One of the significant advantages of lithium-ion technology is its constant capacity versus load. As the load on the battery increases, its capacity maintains its rating proportionately. As an example, if the standard 1C load of 5A is doubled to the 2C load of 10A, the discharge duration is proportionally cut in half to 30 minutes. Doubling the load again to 20A would deplete the battery in 15 minutes.

4.5.2 Temperature Performance

The TB270 series incorporates cell technology that performs well over temperature extremes. It can support an engine start from as low as -5°C (23°F), depending upon the engine start profile. Cold temperature performance is extended to as low as -40°C (-40°F) when using the internally powered heater and allowing the appropriate pre-heat time. This feature prevents the necessity to remove the unit from the aircraft when stored at extremely low temperatures overnight or for longer periods of time. The battery also exhibits excellent high temperature performance, rated for operation as high as 70°C (158°F). The data in Figure 4.4 demonstrates expected pre-heat duration based on the battery transitioning from Sleep to Active starting at several different cold temperatures.

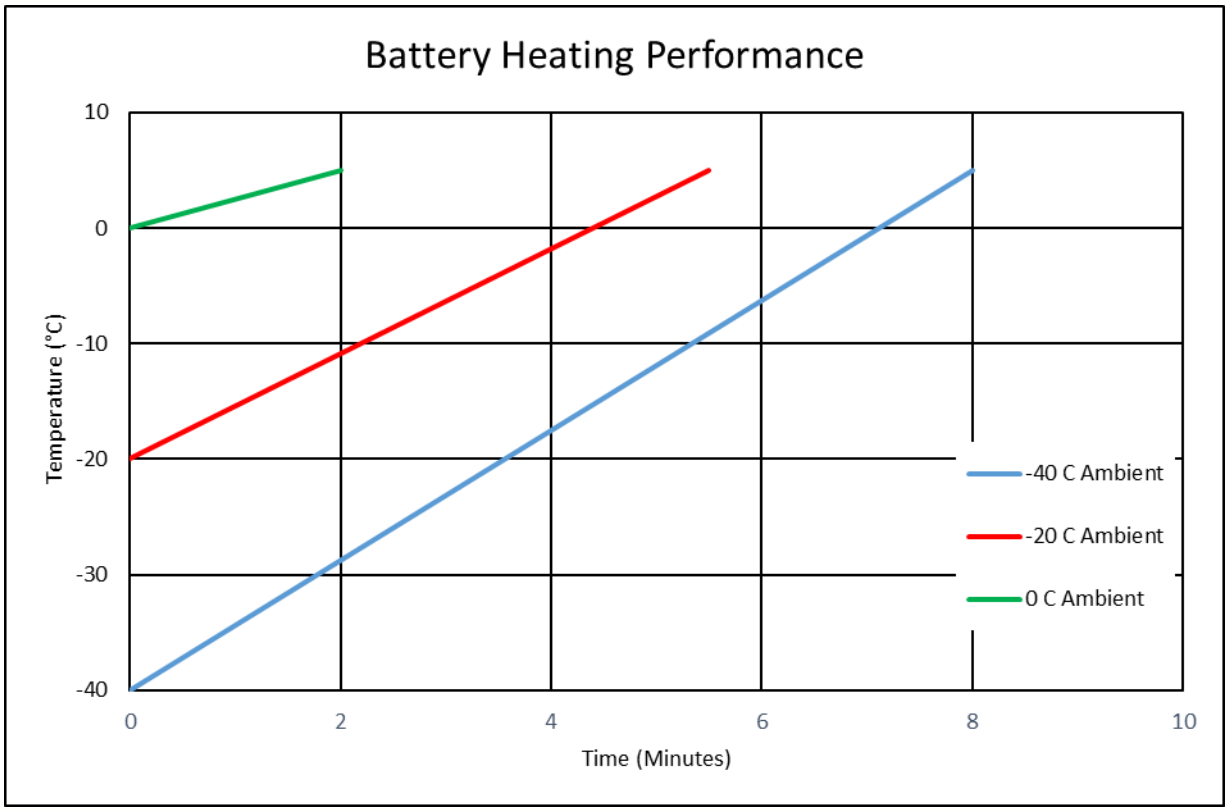

Figure 4.6
Battery Heating Performance

SECTION 5 CONFORMANCE

5.1 DISPATCH VERIFICATION AND IN-FLIGHT MONITORING

The main ship battery typically serves two primary purposes: engine start and emergency backup power.

- Engine Start: In order to attempt an engine start, the user should verify that the FAULT signal is not active. It is also recommended that the battery be fully pre-heated (HEATING signal not active) for an engine start. If used, the pre-programmed Engine Start indicator (-1 units only) can also be used to verify that the battery is ready to start an engine.
- Dispatch for Emergency Backup Power: If the aircraft has a minimum backup power requirement for loss of aircraft electrical generation in emergency operation, the user may need to verify battery capacity prior to flight. This can be done in various ways, possibly including an SOC verification or verifying the Minimum Capacity indicator. Check with the aircraft operating requirements for specific procedures. Once battery capacity is verified as sufficient, the battery is ready for dispatch.

During flight, the battery is capable of providing a number of status indications and health monitoring information to the cockpit or crew through its communication outputs (see Section 4.4).

- In-Flight Monitoring: Typically, all annunciations from the unit should be inactive during flight. However, the HEATING signal may be observed depending on the temperature of the unit and does not represent a hazard or loss of function. An indication of the FAULT signal or independent monitoring of the RTD sensors could require action or degraded function. Consult your aircraft flight manual for details.

5.2 INSTRUCTIONS FOR CONTINUED AIRWORTHINESS

No periodic scheduled maintenance is necessary for continued airworthiness of the TB270 series Advanced Lithium-ion Batteries. If the battery is stored for more than six (6) months, refer to Section 5.4.2 for charging instructions. If the unit fails to perform to specifications, the unit must be removed and serviced by True Blue Power or their authorized designee.

True Blue Power will have, on occasion, the need to update the software of the TB270 series Advanced Lithium-ion Batteries to improve and/or enhance functionality or performance.

With the TB270 Battery's easy field-upgrade option, the unit does not have to be returned to the factory, and in most cases, may not have to be removed from its installation.

Software updates are typically communicated to the public via Service Bulletins issued by True Blue Power and can be found on the product website www.truebluepowerusa.com. Refer to Section 5.3 for updating the TB270 series Advanced Lithium-ion Battery software.

5.3 CONTROL MODE

For control mode operations (e.g. software updates, custom programmable parameters and event log) refer below to Figures 5.1, 5.2 and Table 5.1.

5.3.1 For -1 Units

To enter Control Mode for -1 units, the battery must be idle (no charge or discharge current) and the battery cannot have any active protections. Press and hold the Service Button until the Service Light blinks white (3-5 seconds).

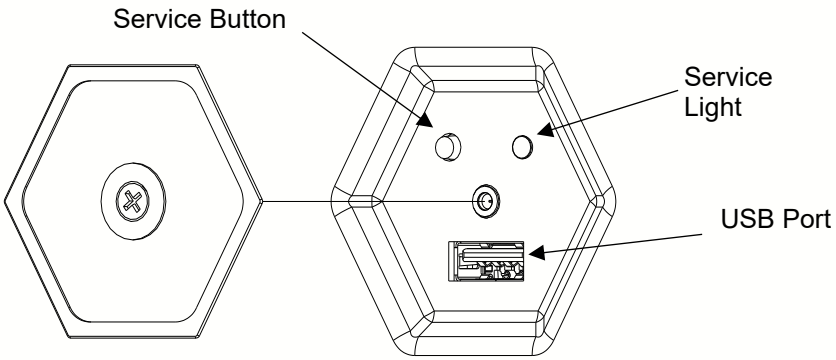

Figure 5.1
USB Service Port (-1 Units Only)

5.3.2 For -2 Units

To enter Control Mode for -2 units, the BATTERY ON discrete input must be OPEN. Press and hold the Status/SOC button until the SERVICE LED (blinks white (3-5 seconds). If the battery is heating, that will be interrupted to enter Control Mode. Connect the USB 2.0 drive to a cable made from the 26-pin circular connector connected to a USB Type-A receptacle.

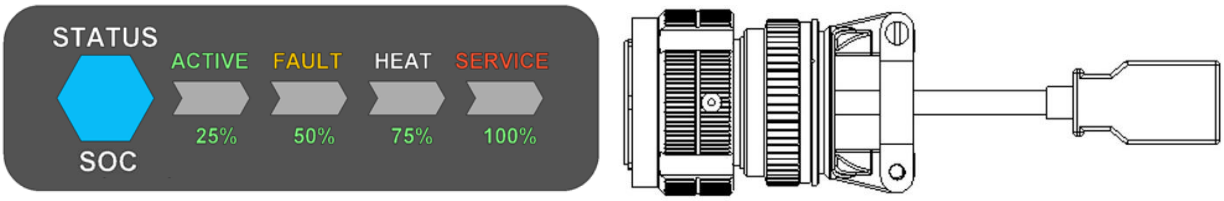

Figure 5.2
On Board Status Indicator & USB Service Port (-2 Units Only)

Update Status	For -1: Service Light Status	For -2: Status/SOC SERVICE Status
Idle (waiting for 3-5 seconds to transition to control mode)	Solid White	Solid White
Ready to transition to control mode (upon releasing button)	Blinking White	Blinking White
USB Drive Detected	Slow Blinking Yellow	Slow Blinking Yellow
Service Button press sequence to exit control mode without installing USB drive	Blue > Blinking Blue	Blue > Blinking Blue
Operation In Progress	Fast Blinking Yellow	Fast Blinking Yellow
Operation Successful	Solid Green	Solid Green
Operation Error	Solid Red	Solid Red

Table 5.1
Service Light Status

5.3.3 Software Update

A. Download the approved software update file from https://www.truebluepowerusa.com/software-updates/ to the root directory of a standard FAT formatted USB 2.0 compatible flash drive, ensuring the filename is exactly update.muf. It is recommended that this is the only file (update.muf) loaded onto the flash drive.

B. Remove the USB access cover (-1 units only). For -2 units, connect 26-pin external communications cable configured with a USB Type A receptacle .

C. Insert the configured USB flash drive into the USB Type-A port.

D. For -1 Units: With the battery idle (no charge or discharge current, no active protections), transition to control mode by pressing and holding the blue service button (located above and to the left of the USB port) until the service light (located above and to the right of the USB port) changes from solid white to blinking white (approximately 3 seconds) and releasing before the flashing white stops (5 seconds).

E. For -2 Units: The BATTERY ON discrete input must be open. Transition to control mode by pressing and holding the Status/SOC button until the SERVICE LED (It is the right-most LED on the battery Status Indicator) changes from solid white to blinking white (approximately 3 seconds) and releasing before the flashing white stops (5 seconds).

F. While the battery is reading from or writing to the USB flash drive the service light will blink yellow when installing the software update.
G. Once the software update is completed the service light will be solid green (if software update completed successfully) or be solid red (if software update did not complete successfully).
H. Remove the USB flash drive and the battery will reboot into flight mode with updated software.
I. Replace the USB access cover securely (-1 only). For -2 units, remove the 26-pin MIL Circular with the USB Type A Receptacle and replace with the properly configured 26-pin MIL Circular connector used on the aircraft.

5.3.4 Load Custom Programmable Parameters

A. Download the installer configuration file to the root directory of a standard FAT formatted USB 2.0 compatible flash drive, ensuring the filename is exactly *installer.cfg.* It is recommended that this is the only file (*installer.cfg*) loaded onto the flash drive. Contact True Blue Power to coordinate parameter and file creation for your application.

B. Remove the USB access cover (-1 units only). For -2 units, connect 26-pin external communications cable configured with a USB Type A receptacle.

C. Insert the configured USB flash drive into the USB Type-A port.

D. For -1 Units: With the battery idle (no charge or discharge current, no active protections), transition to control mode by pressing and holding the blue service button (located above and to the left of the USB port) until the service light (located above and to the right of the USB port) changes from solid white to blinking white (approximately 3 seconds) and releasing before the flashing white stops (5 seconds).

E. For -2 Units: The BATTERY ON discrete input must be open. Transition to control mode by pressing and holding the Status/SOC button until the SERVICE LED (It is the right-most LED on the battery Status Indicator) changes from solid white to blinking white (approximately 3 seconds) and releasing before the flashing white stops (5 seconds).

F. While the battery is reading from or writing to the USB flash drive the service light will blink yellow when installing the custom programmable parameters.

G. Once the custom programmable parameters update is completed the service light will be solid green (if custom programmable parameters update completed successfully) or be solid red (if custom programmable parameters update did not complete successfully).

H. Remove the USB flash drive and the battery will reboot into flight mode with updated custom programmable parameters.

I. Replace the USB access cover securely (-1 only). For -2 units, remove the 26-pin MIL Circular with the USB Type A Receptacle and replace with the properly configured 26-pin MIL Circular connector used on the aircraft.

5.3.5 Verify Custom Programmable Parameters and Software Version

A. To verify custom programmable parameters or the currently loaded software version, place an empty text file named *getcfg.cmd* onto the root directory of a standard FAT formatted USB 2.0 compatible flash drive. It is recommended that this is the only file (*getcfg.cmd*) loaded onto the flash drive. Contact True Blue Power if you have questions regarding creation of the *getcfg.cmd* file.

B. Remove the USB access cover (-1 units only). For -2 units, connect 26-pin external communications cable configured with a USB Type A receptacle.

C. Insert the configured USB flash drive into the USB Type-A port.

D. For -1 Units: With the battery idle (no charge or discharge current, no active protections), transition to control mode by pressing and holding the blue service button (located above and to the left of the USB port) until the service light (located above and to the right of the USB port) changes from solid white to blinking white (approximately 3 seconds) and releasing before the flashing white stops (5 seconds).

E. For -2 Units: The BATTERY ON discrete input must be open. Transition to control mode by pressing and holding the Status/SOC button until the SERVICE LED (It is the right-most LED on the battery Status Indicator) changes from solid white to blinking white (approximately 3 seconds) and releasing before the flashing white stops (5 seconds).

F. While the battery is reading from or writing to the USB flash drive the service light will blink yellow when the battery is downloading the custom programmable parameters onto the USB flash drive.

G. Once the custom programmable parameter update is completed the service light will be solid green (if custom programmable parameters download completed successfully) or be solid red (if custom programmable parameters download did not complete successfully).

H. The USB flash drive will now have a file named *installer.txt* that can be viewed with any text editor. In addition to validating the custom programmable parameters, the *installer.txt* file also provides a timestamp when the *installer.txt* file was created and also displays the battery software version. Note: If the USB flash drive contains both the *installer.cfg* and *getcfg.cmd* files in the root directory, the custom programmable parameters will be installed first and then the *getcfg.cmd* file will generate the *installer.txt* file in this sequence.

I. Remove the USB flash drive and the battery will reboot into flight mode.

J. Replace the USB access cover securely (-1 only). For -2 units, remove the 26-pin MIL Circular with the USB Type A Receptacle and replace with the properly configured 26-pin MIL Circular connector used on the aircraft.

5.3.6 Download Event Log

A. To download the battery event log place an empty text file named *getlog.cmd* onto the root directory of a standard FAT formatted USB 2.0 compatible flash drive. It is recommended that this is the only file (*getlog.cmd*) loaded onto the flash drive. Contact True Blue Power if you have questions regarding creation of the *getlog.cmd* file.

B. Remove the USB access cover (-1 units only). For -2 units, connect 26-pin external communications cable configured with a USB Type A receptacle.

C. Insert the configured USB flash drive into the USB Type-A port.

D. For -1 Units: With the battery idle (no charge or discharge current, no active protections), transition to control mode by pressing and holding the blue service button (located above and to the left of the USB port) until the service light (located above and to the right of the USB port) changes from solid white to blinking white (approximately 3 seconds) and releasing before the flashing white stops (5 seconds).

E. For -2 Units: The BATTERY ON discrete input must be open. Transition to control mode by pressing and holding the Status/SOC button until the SERVICE LED (It is the right-most LED on the battery Status Indicator) changes from solid white to blinking white (approximately 3 seconds) and releasing before the flashing white stops (5 seconds).

F. While the battery is reading from or writing to the USB flash drive the service light will blink yellow when the battery is downloading the event log onto the USB flash drive. A full event log (approximately 9,500 entries) may take up to 8 minutes to download to the USB flash drive.

G. Once the event log is downloaded the service light will be solid green (if event log download completed successfully) or be solid red (if event log download did not complete successfully).

H. The USB flash drive will now have a file named *eventlog.csv* that can be imported into a spreadsheet for viewing and further analysis.

I. Remove the USB flash drive and the battery will reboot into flight mode.

J. Replace the USB access cover securely (-1 only). For -2 units, remove the 26-pin MIL Circular with the USB Type A Receptacle and replace with the properly configured 26-pin MIL Circular connector used on the aircraft.

5.4 OPTIONAL SERVICE

The True Blue Power Advanced Lithium-ion Battery is a maintenance-free product. No scheduled maintenance is required once installed. The procedures described in this section are included for verification of battery performance only on an as-needed, or on-condition, basis. Note, however, that the battery MUST be recharged every six (6) months when not in use.

⚠ WARNING ⚠

EXTREME care and caution should be applied when handling the unit. Danger of short circuit, electrical burns or equipment damage can occur if not handled properly. Be EXTREMELY cautious to avoid shorting terminals, dropping metal objects, hardware or tools on top of or down into the battery. REMOVE ALL JEWELRY before working with the battery.

5.4.1 Visual Inspection

A. Verify that proper communication is available to the cockpit to validate the battery is transmitting data appropriately. To perform this, turn on the avionics master and deactivate the battery disable (if installed). Verify battery operating parameters are displayed appropriately according to the aircraft installation (voltage, SOC, capacity, CAS messages, etc.).

B. Visually inspect the power terminals and Communication connector to make sure they are secure. Inspect the vent connection and make sure the vent hose/tube is secure. Verify that none of the connections are loose and there are no signs of damage, wear or corrosion.

C. Remove the unit from the aircraft. Visually inspect the exterior of the battery casing for signs of damage or wear. Verify that the lid is secure and not loose. Verify that no damage has occurred which would prevent the battery from maintaining its air-tight seal. Inspect the battery area of the aircraft for any signs of improper installation or unusual wear.

D. Some wear is expected due to normal use (for instance: scratches on the bottom of the battery or near the hold-down points). However, if there are any anomalous or concerning visual indicators, the unit should be evaluated and tested for repair or replacement by an authorized repair facility.

5.4.2 Charging

Recommended Chargers / Operation:

1. Benchtop Power Supply: 0-300VDC Range

In order to charge the unit off-aircraft, follow the steps listed below:

1. Set the power supply to a constant voltage of ~288VDC.
2. Limit the maximum current of the power supply to 1C or less (2.5A, 5.0A or 7.5A).
3. Charge the battery until the charge current tapers to less than 0.2A (TB271), 0.4A (TB272) or 0.6A (TB273).

5.4.3 Capacity Check

Most aircraft are certified to use the battery's reserve energy to maintain critical systems in the event of a main power generation loss for a minimum period of time. The required minimum capacity will vary by application. Verify requirements associated with your aircraft.

The battery is designed to dynamically compute its capacity at all times throughout its life. As the battery ages, the accuracy of its reported capacity can change due to a variety of factors associated with its use, environmental conditions, and the characteristics of the cells. Using the procedures in this section, the battery's reported capacity can be recalibrated or verified. This procedure is recommended for improved performance and accuracy but does not represent required maintenance nor is it required for continued airworthiness by the manufacturer. However, consult your aircraft's maintenance procedures for specific requirements.

5.4.3.1 Self-Learning Capacity Calibration

Using the procedure below, the battery can re-calibrate its capacity measurement to improve its accuracy for ongoing use.

A. Ensure that the unit is charged per Section 5.4.2.

B. Apply a constant current load of 1C (2.5A, 5.0A or 7.5A) to discharge the battery pack. (Capacity check should be conducted at 23°C ±3°C (68-79°F) for best results.)

C. When the battery is nearly depleted, it will turn off its power output and stop discharging.

D. Charge the battery again per Section 5.4.2. The battery's reported capacity will be reset to the actual measured value.

5.4.3.2 Manual Capacity Check

If there is any reason to suspect the accuracy of the reported capacity, a manually measured capacity check can be performed.

A. Ensure that the unit is charged per Section 5.4.2.

B. Apply a constant current load of 1C (2.5A, 5.0A or 7.5A) to discharge the battery pack. (Capacity check should be conducted at 23°C ±3°C (68-79°F) for best results.)

C. Monitor the time (in minutes and seconds) from initially applying the constant current load in Step B until the unit the battery is nearly depleted and turns off the power output/stops discharging.

D. Calculate the capacity in amp-hours (Ah):
   - Discharge time (in hours) = discharge minutes / 60
   - Capacity (Ah) = (amps) x (hours) = (X amps) x (Discharge time)

5.4.4 Return to Service

A. Recharge the unit per Section 5.4.2.

B. Measure and verify that the voltage on the unit's power terminals is greater than 264 VDC. A unit should never be returned to service if the voltage is less than this value after charging.

C. Re-install the unit in the aircraft, including securing it via proper hold-downs, mating the electrical connections, and verifying proper vent attachment.

D. Record service action in aircraft log book.

5.4.5 Preparing Battery for Shipment

In accordance with IATA and per UN 3480, PI 965, Sections 1A and 1B, when shipped by air, the True Blue Power Advanced Lithium-ion Battery must be shipped with a state of charge (SOC) not to exceed 30% of rated capacity.

A. To prepare the battery for shipment, refer to the Advanced Lithium-ion Battery Support Guide (located at www.truebluepowerusa.com), which includes a Shipping Preparation guide.

5.5 COMPONENT SERVICE

The cells, electronics, and other components that comprise the TB270 series Advanced Lithium-ion Battery are not user serviceable or replaceable items. Therefore, data is not available from the manufacturer to conduct field service. If the product requires service, please contact the manufacturer.

5.6 STORAGE INFORMATION

In normal use, the battery utilizes the aircraft power to maintain the proper charge voltage and sustain the battery cells at peak capacity. Although the cells have an extremely low relative self-discharge rate, all batteries will slowly self-discharge if left unused for extended periods. In addition, self-discharge rates are directly related to the storage temperature. Higher storage temperatures will result in faster self-discharge rates.

Rechargeable lithium-ion batteries must be stored in a dry, well-ventilated area. They must not be kept in the same area as highly flammable materials. The unit can be stored in the same area as other battery chemistries. The battery does not emit or absorb any gas during storage, transportation, or during normal operating conditions.

CAUTION

NOTE: The unit is shipped with approximately 30% state-of-charge (SOC). Upon receipt the battery shall be fully charged using the procedures listed in this manual (prior to storage and again prior to installation/use).

CAUTION

STORED BATTERIES MUST BE FULLY RECHARGED AT A MINIMUM EVERY 6 MONTHS.

SHELF-LIFE: Batteries stored for an extended period of time must be occasionally recharged. Follow the procedure set forth in Section 5.4.2 for charging. If the storage time is unknown, a battery should be recharged prior to reaching 10% state of charge according to the indicator on the front of the battery.

CAUTION

If a battery is allowed to self-discharge after it has been depleted (i.e if it is not recharged within 7 days), the cells can be damaged. If the battery becomes over-discharged due to this condition, it will protect itself by preventing subsequent charging. The battery must then be returned to the factory for assessment.

STORAGE TEMPERATURE: Exposure to temperatures above 30°C (86°F) for sustained periods of time is possible but may increase the self-discharge rate or result in some permanent loss of capacity. Storage temperatures above 50ºC (122°F) are to be avoided.

5.7 END OF LIFE

Estimated life for the True Blue Power Advanced Lithium-ion Battery is expected to exceed six (6) years. The unit has reliably demonstrated over 20,000+ simulated engine starts and subsequent charge cycles. The cells themselves are designed for a useful life of up to ten (10) calendar years.

The following conditions will help maintain or extend the life and performance of your product:

- Avoid significant exposure to elevated temperatures (above 30°C/86°F) during operation or storage
- Avoid extended periods (greater than 7 days) after a full discharge
- Avoid extended periods of storage (greater than 6 months) without recharge

End of life is represented by the inability of the unit to meet the minimum capacity requirement of the aircraft either as programmed and self-determined by the battery, or upon verification of manual capacity check and verified against aircraft requirements. In the event that the unit exhibits failure, insufficient capacity or expired life, contact True Blue Power for repair, exchange or replacement. Visit www.truebluepowerusa.com for more information.

5.8 DISPOSAL

NOTE: All lithium-ion batteries are classified by the United States government as non-hazardous waste and are safe for disposal as normal municipal waste. However, these batteries do contain recyclable materials and recycling options available in your local area should be considered when disposing of this product. Dispose of in accordance with local and federal laws and regulations.
Do not incinerate.

5.9 TB271 DO-311A COMPLIANCE QUALIFICATION FORM

MODEL NUMBER: TB271 **PART NUMBER:** 6430271-( )
DESCRIPTION: Advanced Li-Ion Main Ship Battery **CERTIFICATION:** FAA TSO-179b
MANUFACTURER: True Blue Power, a division of Mid-Continent Instrument Co., Inc.
ADDRESS: 9400 E. 34th St. North, Wichita, KS 67226, USA
SPECIFICATION: Test Specification (TS) XXX Test Data Sheet (TDS) XXX
STANDARD: RTCA DO-311A, Rev A, dated 12/19/2017

SECTION		SUB	TITLE	RESULT	SUMMARY
1		1.4	Battery Categories	Comply	Energy Category 4: >200Wh Venting Category B: designed vent Architecture Category: Standalone
2		2.1	General Requirements	Comply	RTCA/DO-178C, DAL A Rated Capacity: 2.5 Ah
		2.2	Equipment Requirements	Comply	Met by passing tests in 2.4.4
		2.3	Environmental Conditions	Pass	Required sections of RTCA/DO-160 complete; see EQF
	2.4.4 Performance Tests	2.4.4.1	Physical Examination	Pass	See IM for physical specifications
		2.4.4.2	Acceptance Test Procedure	Pass	ATP per MPS identified above
		2.4.4.3	Insulation Resistance	Pass	Contacts/case electrically connected
		2.4.4.4	Handle Strength	N/A	(no handles)
		2.4.4.5	Capacity Test	Pass	2.5 Ah minimum
		2.4.4.6	Capacity Test at Low/High Temp	Pass	XXAh @ -40°C; XXAh @ 70°C
		2.4.4.7	Constant Voltage Discharge	Pass	I_{PP} = TBDA, I_{PR} = TBDA @ 18.5V
		2.4.4.8	Charge Acceptance	Pass	TBDAh @ -40°C; TBDAh @ 23°C
		2.4.4.9	Charge Retention	Pass	90% @ 23°C; 80% @ 50°C
		2.4.4.10	Cycle Test	Pass	Retained 99% capacity @ 100 cycles
		2.4.4.11	Rapid Discharge Test	Pass	I_{MAX} = TBDA @ 70°C
		2.4.4.12	Short Circuit with Protection	Pass	Max current = TBDA; S/C cutoff @ TBDms
		2.4.4.13	Overdischarge Test	Pass	Protective circuitry prevented charging after overdischarge
		2.4.4.14	Overcharge Test	Pass	Overcharge protection activated at TBDV
	2.4.5 Safety Tests	2.4.5.1	Short Circuit Test of a Cell	Pass	No release of fragments, flames or emissions
		2.4.5.2	Short Circuit Test of a Battery without Protection	Pass	No release of fragments, flames or emissions
		2.4.5.3	Overdischarge without Protection	Pass	Emission of gas, smoke and electrolyte exited vent port
		2.4.5.4	Single Cell Thermal Runaway Containment Test	N/A	
		2.4.5.5	Battery Thermal Runaway Containment Test	Pass	All cells achieved thermal runaway; Maximum case temp = TBD°C
		2.4.5.6	Explosion Containment	Pass	No ruptures in case; no emissions observed
		2.4.5.7	Drop Impact	N/A	

REMARKS:
- Compliance includes all of Section 1 and Section 2, unless noted.
- Sub-paragraphs without specific criteria of note are not listed.

5.10 TB272 DO-311A COMPLIANCE QUALIFICATION FORM

MODEL NUMBER: TB272 **PART NUMBER:** 6430272-( )
DESCRIPTION: Advanced Li-Ion Main Ship Battery **CERTIFICATION:** FAA TSO-179b
MANUFACTURER: True Blue Power, a division of Mid-Continent Instrument Co., Inc.
ADDRESS: 9400 E. 34th St. North, Wichita, KS 67226, USA
SPECIFICATION: Test Specification (TS) XXX Test Data Sheet (TDS) XXX
STANDARD: RTCA DO-311A, Rev A, dated 12/19/2017

SECTION	SUB	TITLE	RESULT	SUMMARY
1	1.4	Battery Categories	Comply	Energy Category 4: >200Wh Venting Category B: designed vent Architecture Category: Standalone
2	2.1	General Requirements	Comply	RTCA/DO-178C, DAL A Rated Capacity: 2.5Ah
	2.2	Equipment Requirements	Comply	Met by passing tests in 2.4.4
	2.3	Environmental Conditions	Pass	Required sections of RTCA/DO-160 complete; see EQF
2.4.4 Performance Tests	2.4.4.1	Physical Examination	Pass	See IM for physical specifications
	2.4.4.2	Acceptance Test Procedure	Pass	ATP per MPS identified above
	2.4.4.3	Insulation Resistance	Pass	Contacts/case electrically connected
	2.4.4.4	Handle Strength	N/A	(no handles)
	2.4.4.5	Capacity Test	Pass	5.0 Ah minimum
	2.4.4.6	Capacity Test at Low/High Temp	Pass	XXAh @ -40°C; XXAh @ 70°C
	2.4.4.7	Constant Voltage Discharge	Pass	I_{PP} = TBDA, I_{PR} = TBDA @ 18.5V
	2.4.4.8	Charge Acceptance	Pass	TBDAh @ -40°C; TBDAh @ 23°C
	2.4.4.9	Charge Retention	Pass	90% @ 23°C; 80% @ 50°C
	2.4.4.10	Cycle Test	Pass	Retained 99% capacity @ 100 cycles
	2.4.4.11	Rapid Discharge Test	Pass	I_{MAX} = TBDA @ 70°C
	2.4.4.12	Short Circuit with Protection	Pass	Max current = TBDA; S/C cutoff @ TBDms
	2.4.4.13	Overdischarge Test	Pass	Protective circuitry prevented charging after overdischarge
	2.4.4.14	Overcharge Test	Pass	Overcharge protection activated at TBDV
2.4.5 Safety Tests	2.4.5.1	Short Circuit Test of a Cell	Pass	No release of fragments, flames or emissions
	2.4.5.2	Short Circuit Test of a Battery without Protection	Pass	No release of fragments, flames or emissions
	2.4.5.3	Overdischarge without Protection	Pass	Emission of gas, smoke and electrolyte exited vent port
	2.4.5.4	Single Cell Thermal Runaway Containment Test	N/A	
	2.4.5.5	Battery Thermal Runaway Containment Test	Pass	All cells achieved thermal runaway; Maximum case temp = TBD°C
	2.4.5.6	Explosion Containment	Pass	No ruptures in case; no emissions observed
	2.4.5.7	Drop Impact	N/A	

REMARKS:
- Compliance includes all of Section 1 and Section 2, unless noted.
- Sub-paragraphs without specific criteria of note are not listed.

5.11 TB273 DO-311A COMPLIANCE QUALIFICATION FORM

MODEL NUMBER: TB273 **PART NUMBER:** 6430273-( )
DESCRIPTION: Advanced Li-Ion Main Ship Battery **CERTIFICATION:** FAA TSO-179b
MANUFACTURER: True Blue Power, a division of Mid-Continent Instrument Co., Inc.
ADDRESS: 9400 E. 34th St. North, Wichita, KS 67226, USA
SPECIFICATION: Test Specification (TS) XXX Test Data Sheet (TDS) XXX
STANDARD: RTCA DO-311A, Rev A, dated 12/19/2017

SECTION		SUB	TITLE	RESULT	SUMMARY
1		1.4	Battery Categories	Comply	Energy Category 4: >200Wh Venting Category B: designed vent Architecture Category: Standalone
2		2.1	General Requirements	Comply	RTCA/DO-178C, DAL A Rated Capacity: 2.5Ah
		2.2	Equipment Requirements	Comply	Met by passing tests in 2.4.4
		2.3	Environmental Conditions	Pass	Required sections of RTCA/DO-160 complete; see EQF
	2.4.4 Performance Tests	2.4.4.1	Physical Examination	Pass	See IM for physical specifications
		2.4.4.2	Acceptance Test Procedure	Pass	ATP per MPS identified above
		2.4.4.3	Insulation Resistance	Pass	Contacts/case electrically connected
		2.4.4.4	Handle Strength	N/A	(no handles)
		2.4.4.5	Capacity Test	Pass	7.5 Ah minimum
		2.4.4.6	Capacity Test at Low/High Temp	Pass	XXAh @ -40°C; XXAh @ 70°C
		2.4.4.7	Constant Voltage Discharge	Pass	I_{PP} = TBDA, I_{PR} = TBDA @ 18.5V
		2.4.4.8	Charge Acceptance	Pass	TBDAh @ -40°C; TBDAh @ 23°C
		2.4.4.9	Charge Retention	Pass	90% @ 23°C; 80% @ 50°C
		2.4.4.10	Cycle Test	Pass	Retained 99% capacity @ 100 cycles
		2.4.4.11	Rapid Discharge Test	Pass	I_{MAX} = TBDA @ 70°C
		2.4.4.12	Short Circuit with Protection	Pass	Max current = TBDA; S/C cutoff @ TBDms
		2.4.4.13	Overdischarge Test	Pass	Protective circuitry prevented charging after overdischarge
		2.4.4.14	Overcharge Test	Pass	Overcharge protection activated at TBDV
	2.4.5 Safety Tests	2.4.5.1	Short Circuit Test of a Cell	Pass	No release of fragments, flames or emissions
		2.4.5.2	Short Circuit Test of a Battery without Protection	Pass	No release of fragments, flames or emissions
		2.4.5.3	Overdischarge without Protection	Pass	Emission of gas, smoke and electrolyte exited vent port
		2.4.5.4	Single Cell Thermal Runaway Containment Test	N/A	
		2.4.5.5	Battery Thermal Runaway Containment Test	Pass	All cells achieved thermal runaway; Maximum case temp = TBD°C
		2.4.5.6	Explosion Containment	Pass	No ruptures in case; no emissions observed
		2.4.5.7	Drop Impact	N/A	

REMARKS:
- Compliance includes all of Section 1 and Section 2, unless noted.
- Sub-paragraphs without specific criteria of note are not listed.

5.12 DO-160 ENVIRONMENTAL QUALIFICATION FORM

MODEL NUMBER: TB271, TB272, TB273 **PART NUMBER:** 643027X-( )
DESCRIPTION: Advanced Li-Ion Main Ship Battery **CERTIFICATION:** FAA TSO-179b
MANUFACTURER: True Blue Power, a division of Mid-Continent Instrument Co., Inc.
ADDRESS: 9400 E. 34th St. North, Wichita, KS 67226, USA.
SPECIFICATION: Test Specification (TS) XXX Test Data Sheet (TDS) XXX
STANDARD: RTCA DO-160, Rev G, dated 12/08/2010

CONDITIONS	SECTION	DESCRIPTION OF TEST
Temperature and Altitude	4	Category C4
Temperature Variation	5	Category S2
Humidity	6	Category B
Operational Shock and Crash Safety	7	Category B
Vibration	8	Fixed Wing: Category R; Curves C & C1 Rotorcraft: Category U; Curve G
Explosion	9	Category H
Waterproofness	10	Category W
Fluids	11	Category F
Sand and Dust	12	Category S
Fungus	13	Category F
Salt Fog	14	Category S
Magnetic Effect	15	Category A
Power Input	16	Category B(RX)
Voltage Spike	17	Category A
Audio Frequency Conducted Susceptibility	18	Category Z
Induced Signal Susceptibility	19	Category ZC
Radio Frequency Susceptibility	20	Category Y (conducted) Category G (radiated)
Emission of Radio Freq Energy	21	Category ML
Lightning Induced Transient Susceptibility	22	Category B3 (pin injection) Category K3L3 (cable bundle)
Lightning Direct Effects	23	Category X
Icing	24	Category X
ESD	25	Category A
Fire, Flammability	26	Category X

REMARKS:
Section 4: Category C4 with excursions as declared by the manufacturer:

- 4.5.1: Ground Survival Low Temp -55°C
- 4.5.1: Short-Time & Operating Low Temp -40°C
- 4.6.1: Altitude +55,000 feet
- 4.5.3: Ground Survival High Temp +85°C
- 4.5.4: Short-Time & Operating High Temp +70°C
- 4.6.2: Decompression +8,000 feet

Section 13: Category F met by analysis.