Christof Teuscher

ECE 410/510: Hardware for AI and ML, Spring 2026

Codefest #2: Roofline and final project M1

Portland State University
Department of Electrical and Computer Engineering (ECE)
www.teuscher-lab.com
teuscher@pdx.edu

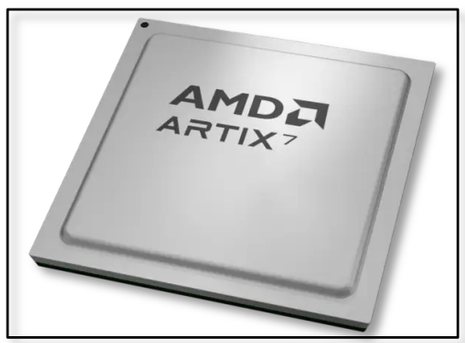

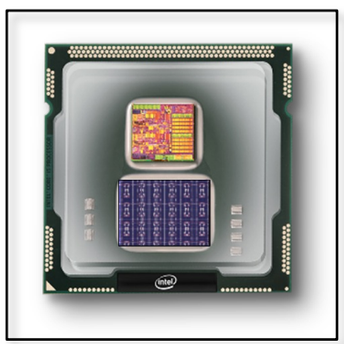

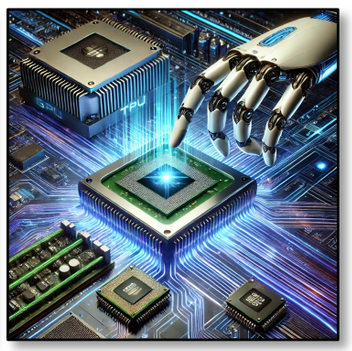

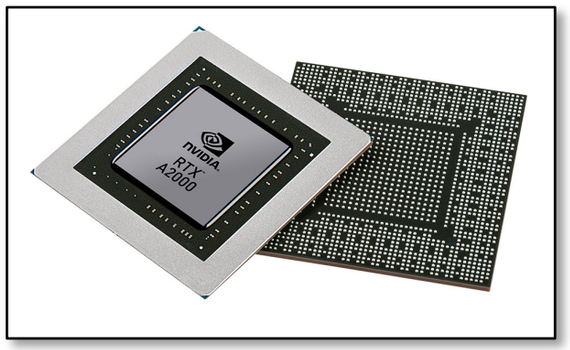

teuscher Lab
teuscher-lab.com

Portland State
UNIVERSITY

Codefest #1

- Good job!
- Justify your thinking and your solutions!
- Solutions posted once everyone has earned a “Satisfactory.”
- On Canvas:
  - Complete = Satisfactory (S)
  - Incomplete = Not yet satisfactory (NY)
  - “Revision tokes” grade item tells you how man tokens you have

Project vision

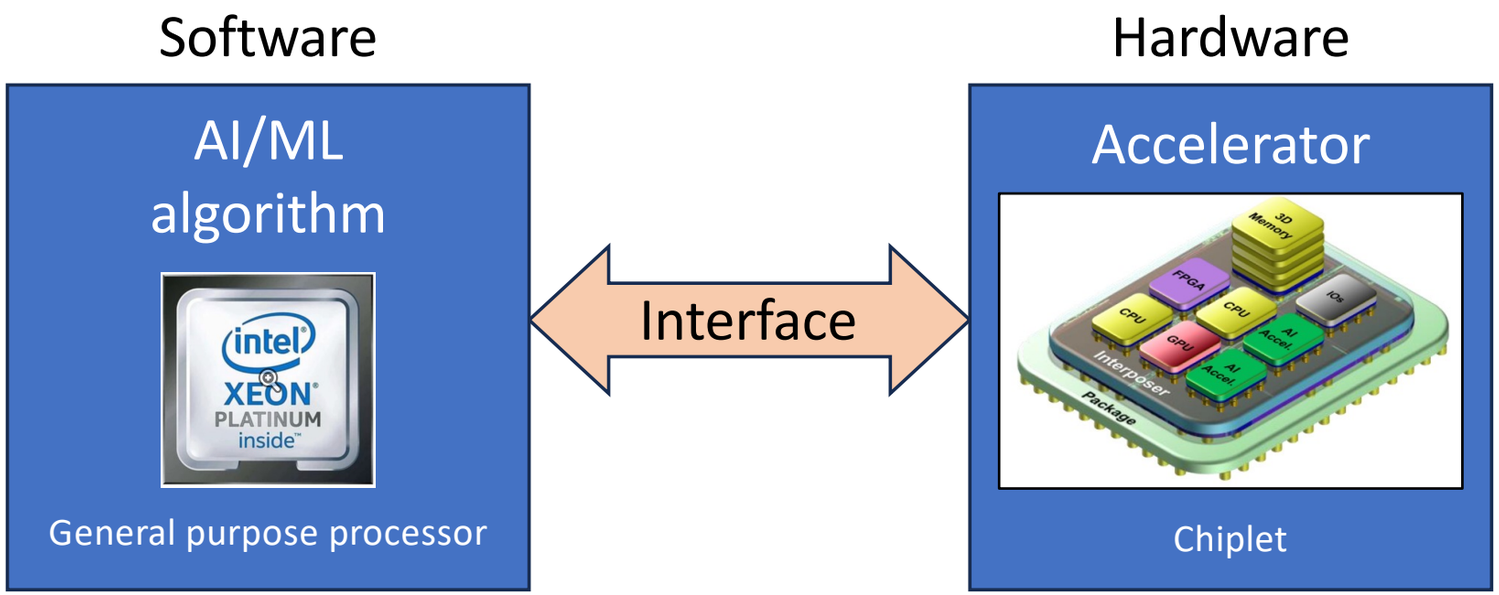

Design, test, and benchmark a co-processor chiplet that accelerates parts of some AI/ML code. Start with a blank slate for your design.

[Alternative]: design a stand-alone chiplet.

Compute stack

Start with the algorithm

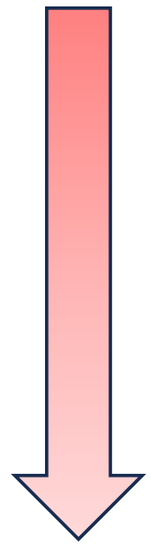

...

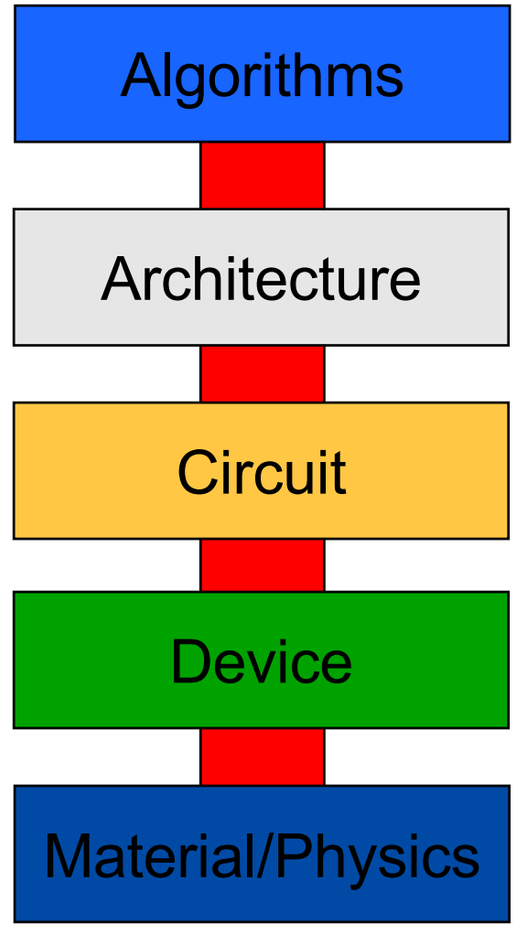

What is a chiplet?

- A chiplet is a **small, specialized piece of silicon that can be combined with other chiplets to form a complete integrated circuit (IC) or system-on-chip (SoC).**
- Instead of manufacturing one large monolithic chip, the chiplet approach breaks down complex processor designs into smaller functional blocks that can be manufactured separately and then integrated together using advanced packaging technologies.
- Chiplets are connected using **high-speed, short-range communication interfaces** that enable them to work together as if they were on a single piece of silicon.
- This **modular approach** has been widely adopted by companies like AMD, Intel, and TSMC to create more efficient and powerful processors while overcoming the limitations of traditional monolithic chip design

What is a chiplet?

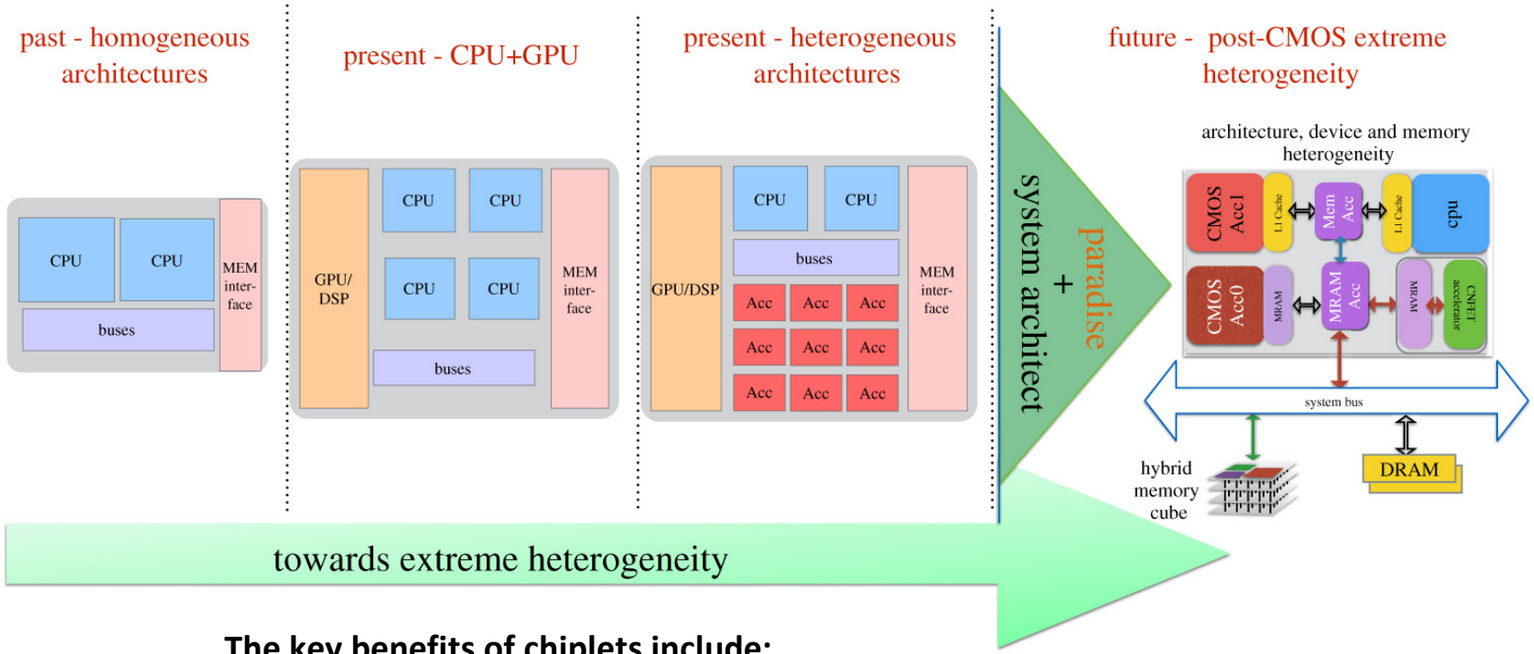

The key benefits of chiplets include:

- Improved manufacturing yields, as smaller dies have fewer defects
- Better scalability for different performance and power requirements
- The ability to mix and match process technologies optimized for specific functions
- Reduced costs by reusing proven IP blocks across different products

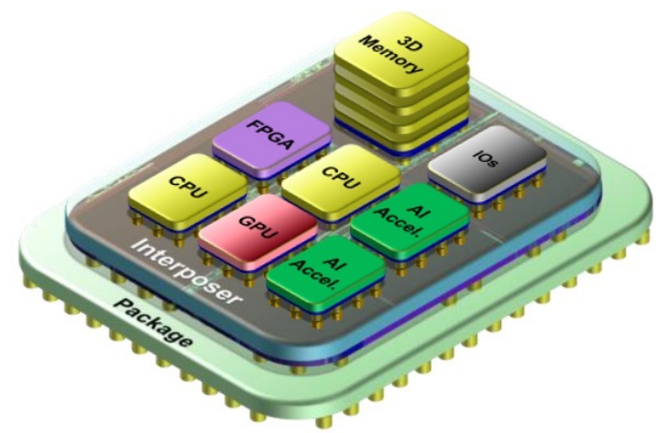

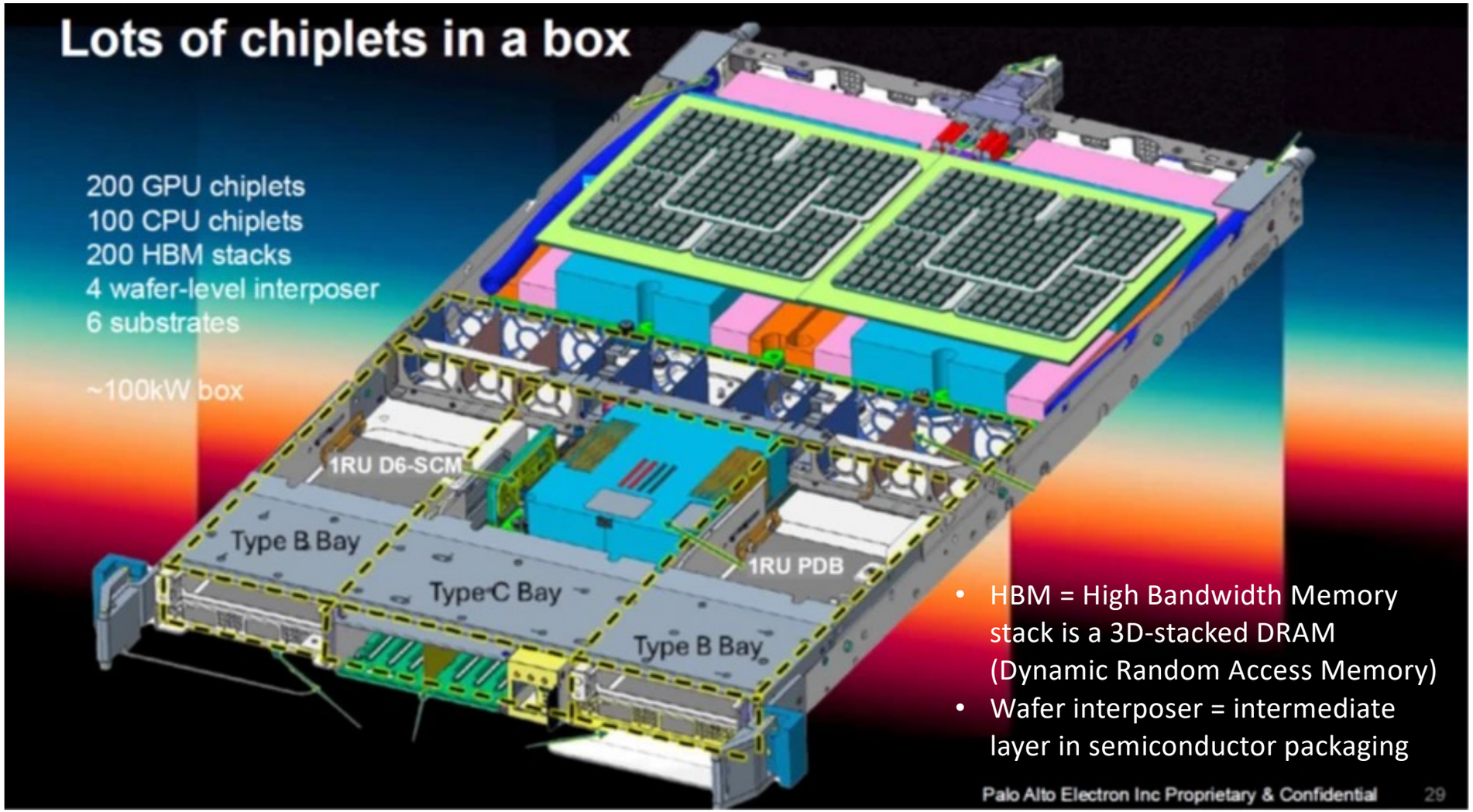

- HBM = High Bandwidth Memory stack is a 3D-stacked DRAM (Dynamic Random Access Memory)
- Wafer interposer = intermediate layer in semiconductor packaging

https://semiengineering.com/chiplets-where-are-we-today

Communication interfaces

Interface	Complexity	Typical bandwidth	Notes
SPI	Low	Up to ~50 Mbit/s	Good for low-throughput edge inference. Simple to implement and verify. Appropriate if your kernel runs on an MCU-class host.
I²C	Low	Up to ~3.4 Mbit/s	Very low bandwidth; only suitable if your accelerator processes tiny models or sensor data. Requires strong justification.
AXI4-Lite	Medium	Varies by bus width	ARM AMBA standard; widely used in FPGA SoC designs. Good choice for control-plane traffic and register maps. Pair with AXI4 Stream for data.
AXI4 Stream	Medium	High (configurable)	Unidirectional streaming; natural fit for inference pipelines with continuous data flow. Pairs well with AXI4-Lite control.
PCIe (Gen3/4)	High	~1–16 GB/s per lane	Appropriate for data-center inference accelerators. Requires a PCIe endpoint controller IP; implementation complexity is significant. Suitable for 510-level students.
UCIe (chiplet)	High	Up to ~100 GB/s	Universal Chiplet Interconnect Express. Appropriate for multi-die designs. Primarily an architectural study at this scale.

How to pick a project

Dos

- Pick something exciting, at the forefront of technology
- Pick something that challenges you
- Something that will impress a hiring manager
- Failure should be an option
- Something new that you want to learn
- Start with a blank slate, but it's OK to draw inspiration from existing architectures.

Dont's

- No relying on current accelerators, e.g., GPUs
- No traditional CPUs.
- No cache algorithms, no branch predictors, etc.!
- No teamwork allowed. You must have your own project. If several want to work on the same problem, you'd be competing with each other (in a friendly way!).

Example AI/ML applications

- **Computer Vision**
  - Image classification and object detection
  - Facial recognition (with privacy considerations)
  - Medical image analysis
  - Quality control in manufacturing
  - Autonomous vehicles and robotics
- **Natural Language Processing**
  - Machine translation
  - Sentiment analysis
  - Text summarization
  - Chatbots and virtual assistants
  - Information extraction from documents
- **Recommendation Systems**
  - E-commerce product recommendations
  - Content recommendations (streaming services, news)
  - Advertisement targeting
  - Social media feed curation
- **Predictive Analytics**
  - Financial forecasting and risk assessment
  - Predictive maintenance for equipment
  - Supply chain optimization
  - Healthcare outcome prediction
  - Customer churn prediction
- **Anomaly Detection**
  - Fraud detection in finance
  - Network security monitoring
  - Manufacturing defect detection
  - Health monitoring systems
- **Time Series Analysis**
  - Stock market prediction
  - Energy load forecasting
  - Weather forecasting
  - Sales forecasting
- **Reinforcement Learning**
  - Game playing agents
  - Robotics control
  - Resource management optimization
  - Autonomous systems
- **Speech Recognition and Synthesis**
  - Voice assistants
  - Transcription services
  - Accessibility tools
  - Voice-based authentication
- **Generative AI**
  - Text generation (creative writing, code, content)
  - Image, video, and audio generation
  - Design assistance (architecture, fashion, graphics)
  - Synthetic data generation

Examples codes

Three “pure” Python codes of typical ML algorithms:

- **Convolutional neural network with backpropagation training**
- **A Q-learning reinforcement algorithm**
- **A transformer**

The codes are “pure,” i.e., they do not rely on Python ML libraries, such as PyTorch or Tensorflow. That means the codes are easy to analyze and profile.

Codes: `https://github.com/christofteuscher/hw4ai-sp26/tree/main/ml_algorithm_sample_codes`

Want to do something more exotic?

- Quantum accelerator
- Optical reservoir computer
- Mem-element neuromorphic chip
- Spintronics
- Superconducting Josephson-Junctions
- …

Talk to me before you embark on a mission impossible…

Christof Teuscher • teuscher@pdx.edu

How to model/reason about your accelerator

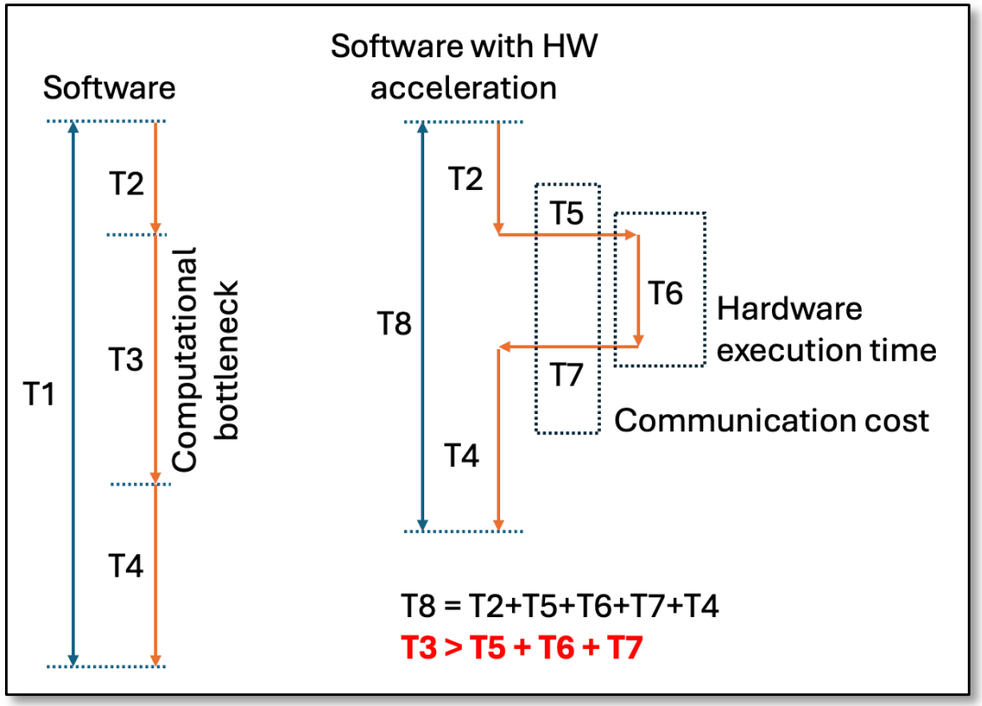

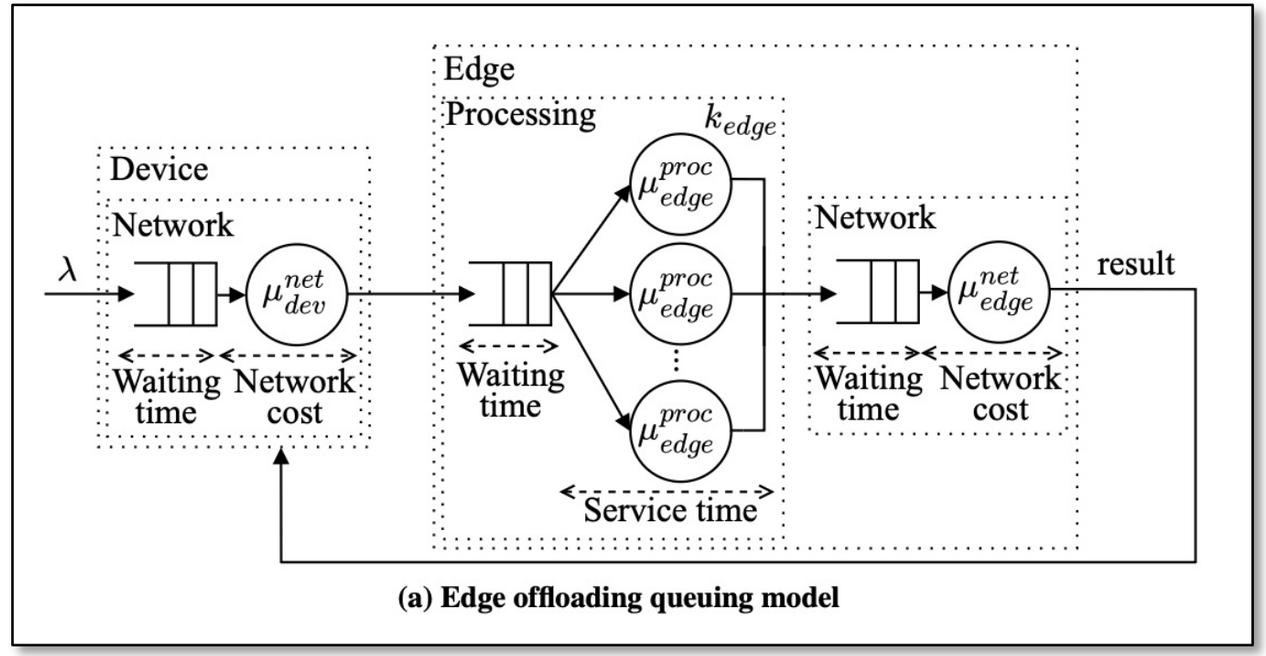

(a) Edge offloading queuing model

Ask your LLM to code an interactive evaluation tool!

Ng, Nathan, David Irwin, Ananthram Swami, Don Towsley, and Prashant Shenoy. "**To Offload or Not To Offload: Model-driven Comparison of Edge-native and On-device Processing In the Era of Accelerators**." arXiv preprint arXiv:2504.15162 (2025).

teuscher Lab
teuscher-lab.com

Portland State UNIVERSITY

Iterative, rapid prototyping codesign process

https://www.pacific-research.com/iterative-product-development

How to draw a roofline

1. Get P_{peak} and B_{peak}.
2. Calculate ridge point.
3. The compute ceiling is a horizontal line at P_{peak}.
4. The bandwidth ceiling is a line with slope 1 on a log-log plot.
5. Choose axis ranges, e.g., 0.1 to 1,000 FLOP/B (on log scale)
6. Place kernels.

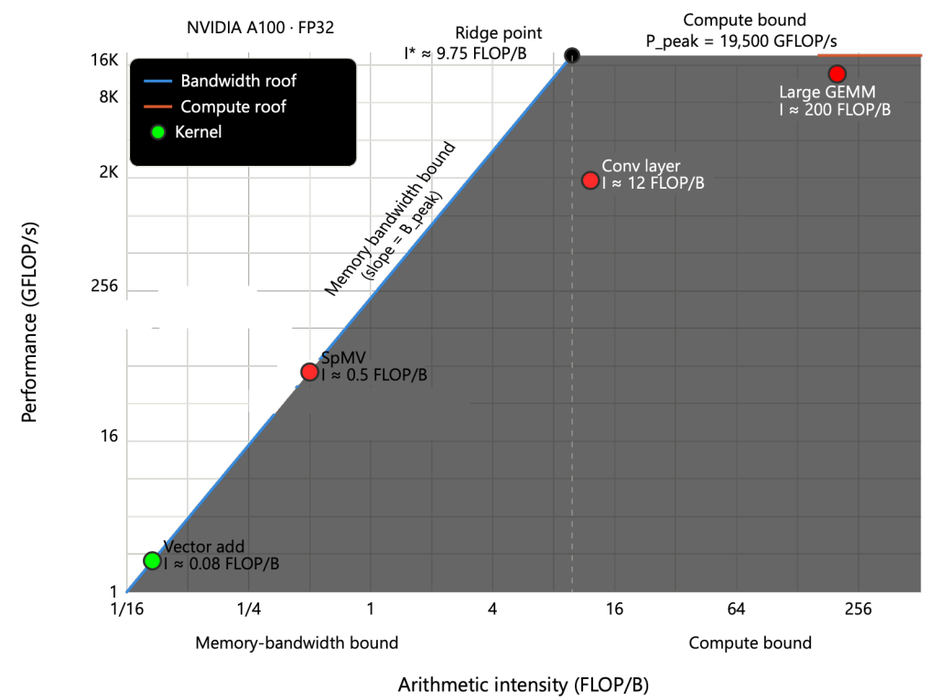

Have our LLM write an interactive tool!

Heilmeier questions

1. **What are you trying to do**? Articulate your objectives using absolutely no jargon.
2. **How is it done today**, and what are the limits of current practice?
3. **What is new in your approach** and why do you think it will be successful?
4. Who cares? If you are successful, what difference will it make?
5. What are the risks?
6. How much will it cost?
7. How long will it take?
8. What are the mid-term and final “exams” to check for success?

https://www.darpa.mil/about/heilmeier-catechism

What do engineers do if they can't get an exact number?

- Make an estimate.
- Back-of-the-envelope calculation.
- Create 3 scenarios, e.g., best case, worst cast, most likely case