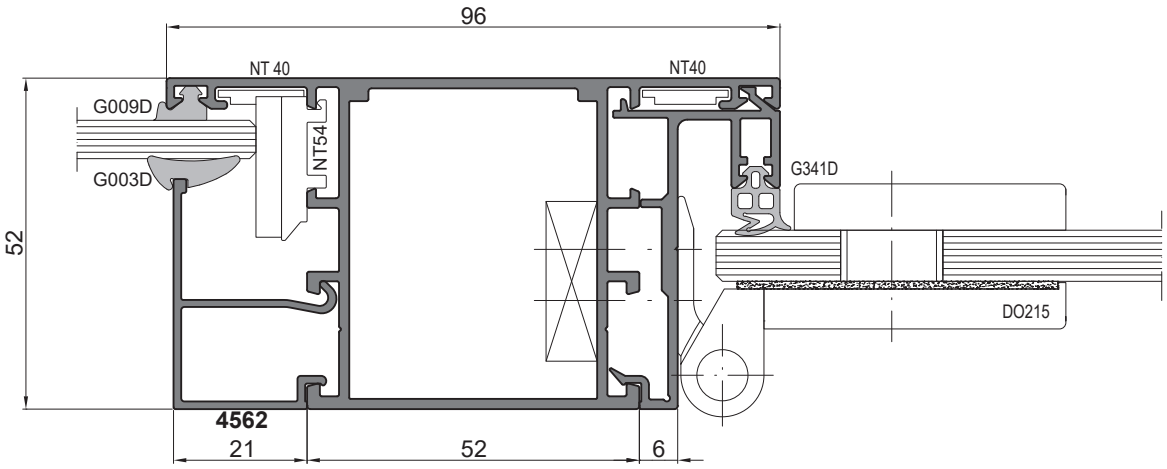
96
NT 40
NT40
G009D
NT54
G003D
G341D
52
DO215
4562
21
52
6