Abstract-

This paper presents a comprehensive study on the Field-Oriented Control (FOC) of Brushless DC (BLDC) motors utilizing the DRV8323RS motor driver. BLDC motors offer several advantages over traditional brushed DC motors, including higher efficiency, longer lifespan, and smoother operation. FOC is a sophisticated control technique that optimizes the performance of BLDC motors by decoupling the torque and flux components, allowing for precise control of motor speed and torque.The DRV8323RS is a three-phase gate driver with integrated protection features, making it an ideal choice for driving BLDC motors in various applications. This research focuses on the implementation and performance evaluation of FOC using the DRV8323RS motor driver. The paper begins with an overview of BLDC motor principles, FOC theory, and the features of the DRV8323RS motor driver. The methodology section outlines the hardware setup, including the motor, driver, microcontroller, and other peripheral components. The software development process for FOC implementation is detailed, covering algorithms for rotor position estimation, current control, and speed regulation. Experimental results are presented to validate the effectiveness of FOC control using the DRV8323RS driver. Performance metrics such as speed response, torque ripple, and efficiency are evaluated under various operating conditions and compared with traditional control methods. Additionally, the paper discusses practical considerations and challenges encountered during the implementation, including parameter tuning, sensor selection, and system integration. Recommendations for optimizing FOC performance and future research directions are also provided.In conclusion, this research demonstrates the feasibility and benefits of employing FOC with the DRV8323RS motor driver for precise and efficient control of BLDC motors. The findings contribute to the advancement of motor control techniques and have implications for a wide range of industrial and automotive applications.

INDEX

Sr No	Title	Page No.
1	Introduction	7
2	Literature Review	8
3	System Description	9
4	Methodology	10-14
5	Software Implementation	15
6	Experiments and Results	16.17
7	Conclusion	18
8	Future Scope	19

LIST OF FIGURES

Fig.	*Caption*	*Page No.*
1	STM32F405	10
2	Pinout of DRV8323RS	11
3	MOSFETS Diagram	12
4	Schematic of PCB	13,14
5	FOC control Loop	15
6	Features and board Images	16,17

1. Introduction

The advent of Brushless DC (BLDC) motors has revolutionized various industries due to their inherent advantages such as higher efficiency, greater reliability, and lower maintenance requirements compared to traditional brushed DC motors. These motors find extensive applications in fields ranging from industrial automation to automotive propulsion systems. However, to fully harness the potential of BLDC motors, advanced control techniques are essential. Among these techniques, Field-Oriented Control (FOC) stands out for its ability to achieve precise speed and torque control, leading to enhanced performance and efficiency.

This paper focuses on the implementation and evaluation of FOC for BLDC motor control using the DRV8323RS motor driver. The DRV8323RS, a three-phase gate driver with integrated protection features, offers a robust solution for driving BLDC motors, making it an ideal choice for a wide range of applications.

The motivation behind this research stems from the increasing demand for efficient and precise motor control systems in various industries. By utilizing FOC in conjunction with the DRV8323RS motor driver, this study aims to address the need for optimized BLDC motor control solutions that can meet the evolving requirements of modern applications. The introduction section provides an overview of the key concepts and components involved in BLDC motor control. It starts by discussing the fundamental principles of BLDC motor operation, highlighting the differences between BLDC and brushed DC motors, and elucidating the advantages of BLDC motors. Subsequently, it introduces the concept of FOC and explains its significance in improving the performance of BLDC motors by decoupling the control of torque and flux.

Furthermore, the introduction outlines the features and capabilities of the DRV8323RS motor driver, emphasizing its role in facilitating the implementation of FOC control for BLDC motors. The integrated protection mechanisms of the DRV8323RS, such as overcurrent and overtemperature protection, ensure the safe and reliable operation of the motor system.

In summary, the introduction sets the stage for the subsequent sections of the paper by providing a comprehensive overview of the research objectives, the significance of FOC in BLDC motor control, and the suitability of the DRV8323RS motor driver for implementing FOC. The following sections will delve deeper into the methodology, experimental results, and discussions, culminating in conclusions and future research directions.

2. Literature Review

[1]The FOC algorithm has been implemented on a BLDC motor using the low-cost STM32F103C8T6 microcontroller. The STM32F103C8T6 microcontroller is able to calculate all algorithms and process data. In order to validate the FOC algorithm system and assess the performance of the STM32F103C8T6 microcontroller, a 350-watt BLDC motor on an electric bicycle was tested and compared with a Universal controller. The test has been conducted that the FOC controller was superior to the Universal controller in saving power. The required current is less in a steady state or in a peak state. So that the battery used will last longer. This is due to the use of the Space Vector Pulse Width Modulation (SVPWM) method, which increases the efficiency of 3-phase voltage generation on BLDC motor. In testing, it was also proven that FOC can rotate BLDC motor at low speeds and reduce torque ripple.

[2]The paper designs a high power brushless DC motor (BLDC) closed-loop control system, mainly including design of FOC drive circuit, H bridge drive circuit, Control of rotation direction for motor and speed detection circuit. In order to improve the performance of motor running, one adopts PID algorithm, through the tuning of parameters, the control exhibits very good performance. Experiments show that both hardware and software control algorithms are reliable, stable. The running performance of the system is robust before or after adding load. It describe the principles behind field orientated control method for brushless direct current motors using an absolute position sensor and to implement a working field orientated algorithm base motor controller using a microcontroller and complementing hardware. The work consists of text, pictures and tables describing the theoretical background, implementation and system verification.

[3] In this paper, the comparative performance analysis of Field oriented control (FOC) of Permanent magnet brushless DC (PMBLDC) motor using sinusoidal pulse width modulation (SPWM) and space vector pulse width modulation (SVPWM) techniques is presented. The primary focus of using field oriented control for motor is to control the motor parameters in d-q axes along with sinusoidal and space vector modulated pulses for voltage source inverter driving the BLDC motor. This vector control method improves the system performance along with high efficiency and low torque ripple thus making it suitable for finding applications in high performance variable frequency drives. The sensor less approach for rotor position sense provides an advantage of cost reduction with ease of implementation using digital signal controllers (DSCs) and microprocessors. The analysis of the system is realized using MATLAB/SIMULINK program. The simulation results show that the SVPWM based system has superior performance compared to SPWM system.

[4] Field Oriented Control (FOC) is a widely employed motor control methodology for Brushless DC (BLDC) motors. FOC requires an accurate measure of the rotor angular position for proper operation. Depending on how this rotor position is obtained, FOC can be implemented in either sensored mode or sensorless mode. Typically, sensored FOC employs position sensors to measure rotor angular position, whereas sensorless FOC estimates the rotor position using state observers based on currents, voltages and back electro motive forces (BEMF). This paper presents the first stage of a research aimed to identify an optimum observer type for a sensorless FOC, and it focuses in particular on the implementation of a Luenberger BEMF observer (LBO) based sensorless FOC system. Based on the mathematical formulation of the problem, the LBO was constructed to be a timevarying system, which introduced additional complexities when implementing the system in MATLAB. All simulations were carried out in the MATLAB Simulink environment according to predefined test criteria. The simulation results of the sensored FOC show accurate tracking of the reference speed and smooth transition dynamics, whereas the sensorless FOC simulations also indicate similar performance to the sensored case in general. However, a steady state speed ripple was noticed in the sensorless mode compared to sensored mode, along with increased settling times

3. System Description-

Entire system consists of custom BLDC motor driver PCB having DRV8323RS as and motor driver IC and stm32f405 microcontroller. The system is designed for 50w power rating. PCB is suitable for 80kv capacity BLDC motor. The control technique used for motion control is field orientation control. FOC operates on the principle of transforming the three-phase stator currents and voltages from the stationary reference frame (abc) to a rotating reference frame (dq), aligned with the rotor flux. This transformation simplifies the control problem by decoupling the torque-producing (d-axis) and magnetizing (q-axis) components. FOC system has 2 control loops – current loop and speed control loop. Current loop regulates the stator currents (Id, Iq) to track the desired reference values. Proportional-Integral (PI) controllers are typically used to maintain precise current control. Adjusts the reference values for Id and Iq to achieve the desired speed or torque command. The speed loop often includes a PI or Proportional-Integral-Derivative (PID) controller.

4. Methodology-

4.1 Schematic of PCB-

i. STM32F405-

STM32F405 is an ARM Cortex-M4 microcontroller from the STM32 family of devices by STMicroelectronics. It has a 32-bit ARM Cortex-M4 core running at up to 168 MHz, 1 MB of Flash memory, 192 KB of RAM, and various peripherals such as USB, Ethernet, and CAN.

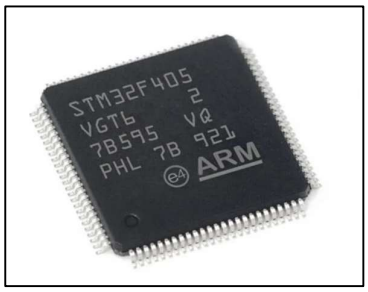

Fig No.1 – STM32F405

Performance Parameters-

- 32-bit ARM Cortex-M4 core with FPU;
- Operating frequency up to 168 MHz;
- 1.25 DMIPS/MHz (Dhrystone 2.1) performance;
- Up to 1 MB Flash, 192KB RAM;
- Operating voltage range of 2.0V – 3.6V;
- 216MHz maximum CPU frequency;
- 64 ~ 144 pinout: 4 x 4.2 mm;
- 96-bit unique ID;
- 12-bit ADC with 16 channels;
- 17 timers including 32-bit with PWM;
- 96 line general purpose I/O pins;
- 1.25 DMIPS/MHz performance;
- 8/16/32-bit external bus interface;
- x I2C, 3 x SPI, 6 x USART, 2 x CAN, USB 2.0 FS OTG;
- Debug support: JTAG and SWD interface with 4-wire JTAG.

ii. DRV8323RS-

The DRV832x family of devices is an integrated gate driver for three-phase applications. The devices provide three half-bridge gate drivers, each capable of driving high-side and low-side N-channel power MOSFETs. The DRV832x generates the correct gate drive voltages using an integrated charge pump for the high-side MOSFETs and a linear regulator for the low-side MOSFETs. The Smart Gate Drive architecture supports peak gate drive currents up to 1-A source and 2-A. The DRV832x can operate from a single power supply and supports a wide input supply range of 6 to 60 V for the gate driver and 4 to 60 V for the optional buck regulator.

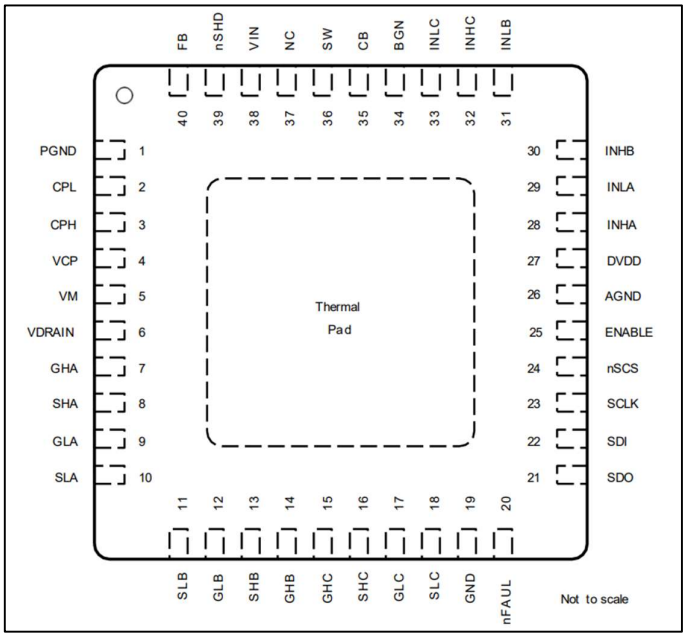

Fig No.2 – Pinout of DRV8323RS

iii. CSD18510Q5B N- Channel MOSFET-

40-V, 0.79-mΩ, SON 5-mm × 6-mm NexFET power MOSFET has been designed to minimize losses in power conversion applications.

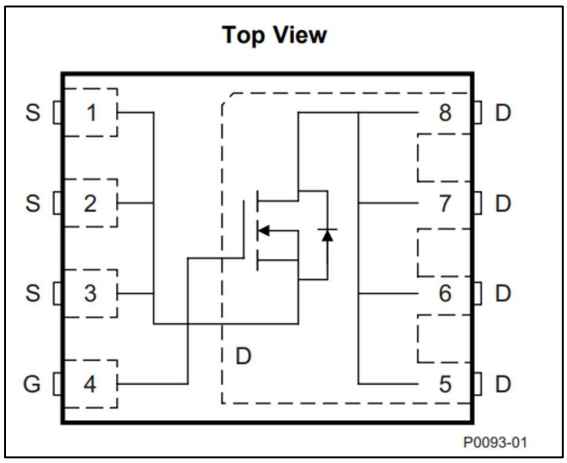

Fig No.- 3 MOSFET Top View

4.2- Schematic of PCB-

1.Microcontroller side PCB-

Figure Number 4 represents the schematic of microcontroller circuit of PCB. It consists of

- Capacitor bank for filtration of signal.
- 2 Low Dropout Regulators providing 3.3v and 5v respectively.
- 16Mhz crystal oscillator for clock generation.
- Different types of GPIO ports

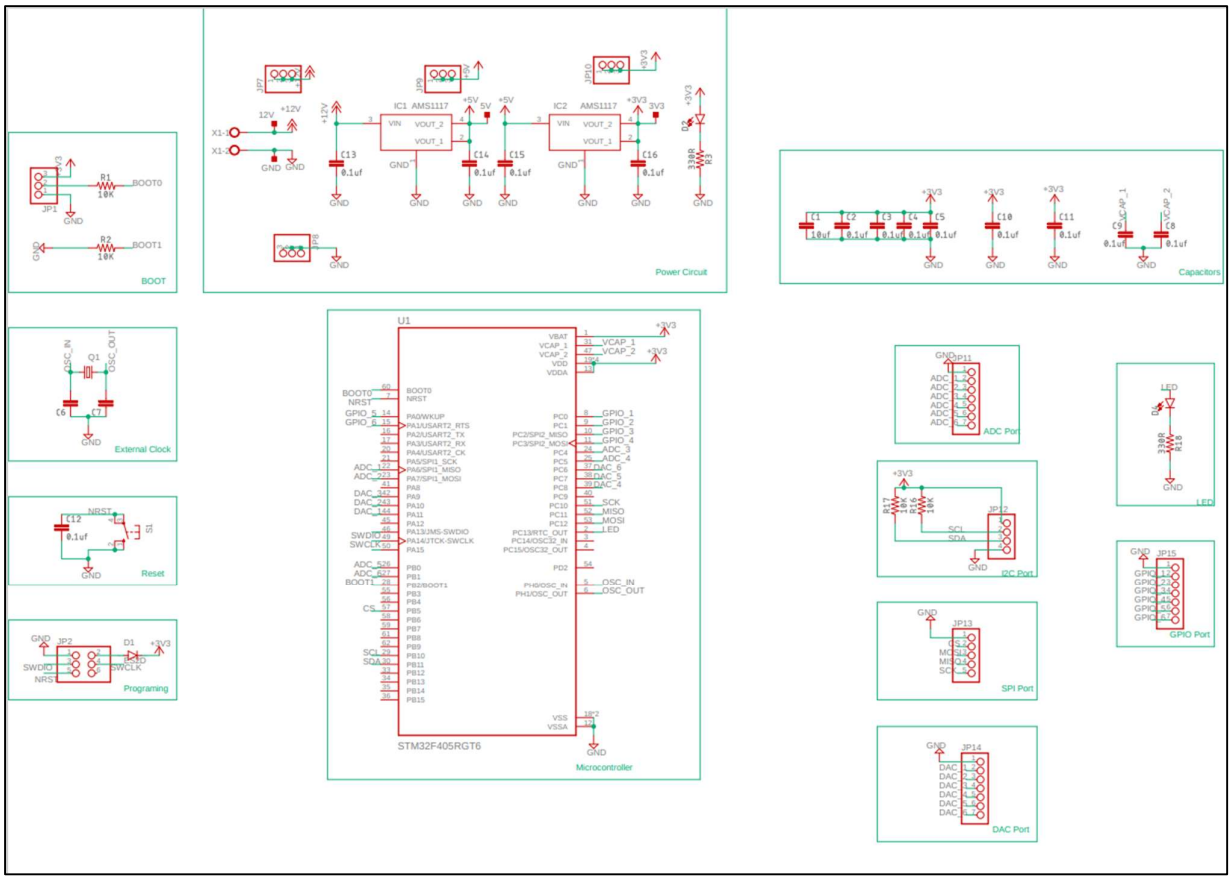

Fig. 4 – Microcontroller schematic

II. Motor driver circuit-

This schematic consists of-

1. Bulk Capacitors for power distribution
2. 6 channel MOSFET drive
3. DRV8323RS motor driver IC
4. Internal current sensor for current sensing of each phase
5. Voltage divider network for checking voltage across each phase

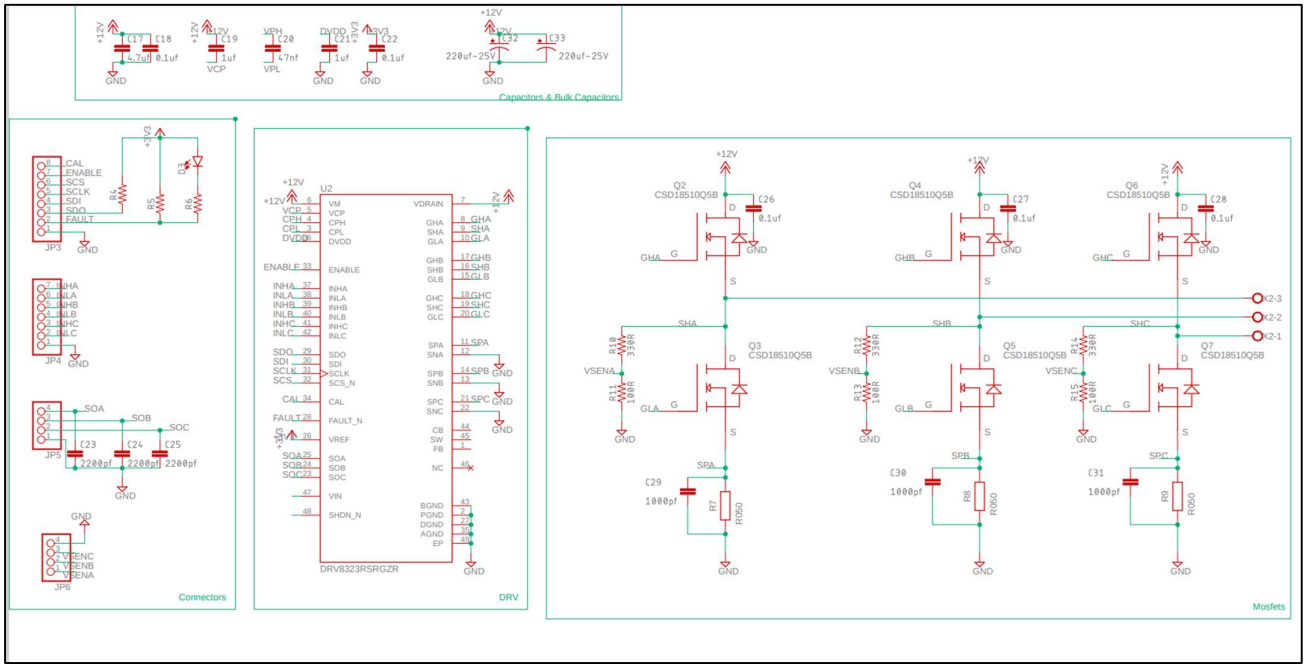

Fig No.5- Motor driver schematic

5. Software Implementation-

Existing Motor Control/Driving Techniques:

1. Trapezoidal control: Also known as 6-step control, this is the simplest algorithm .For each of the 6 commutation steps, a current path is formed between a pair of windings, leaving the third winding disconnected. This method generates high torque ripple, leading to vibration, noise, and poorer performance compared to other algorithms.
2. Sinusoidal control: Also known as voltage-over- frequency commutation, sinusoidal control overcomes many of the issues involved with trapezoidal control by supplying smoothly (sinusoidal) varying current to the 3 windings, thus reducing the torque ripple and offering a smooth rotation. However, these time-varying currents are controlled using basic PI regulators, which lead to poor performance at higher speeds.
3. Field Oriented Control (FOC): Also known as vector control, FOC provides better efficiency at higher speeds than sinusoidal control. It also guarantees optimized efficiency even during transient operation by perfectly maintaining the stator and rotor fluxes FOC also gives better performance on dynamic load changes when compared to all other techniques. Field Oriented Control is one of the methods used in variable frequency drives or variable speed drives to control the torque (and thus the speed) of three-phase AC electric motors by controlling the current .With FOC, the torque and the flux can be controlled independently .FOC provides faster dynamic response than is required for applications like washing machines. There is no torque ripple and smoother, accurate motor control can be achieved at low and high speeds using FOC. The torque of an induction motor is at a maximum when the stator and the rotor magnetic fields are orthogonal to each other. In FOC, the stator currents are measured and adjusted so that the angle between the rotor and stator flux is 90 degrees to achieve the maximum torque.

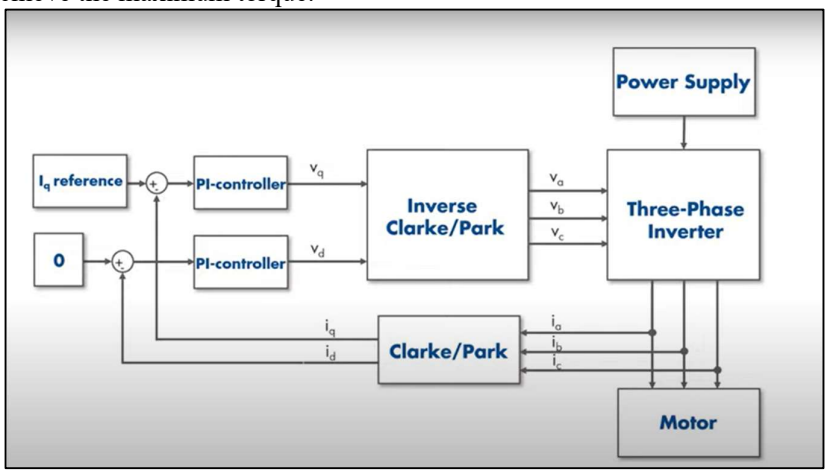

Fig No.6- FOC control loop

The steps involved in sensored FOC are as follows:

Step 1: Two of the three stator phase currents are measured and the third current is determined using Kirchoff''s current relation, Ia + Ib + Ic = 0 Where Ia, Ib, and Ic are phase currents

Step 2:The three phase currents are converted into a 2-axis coordinate system from the 3-axis system of the stator, using a Clarke transformation, Where Ia and ß are the stator currents transformed to the 2- axis coordinate system.

Step 3: The components along the 2-axis of the stator currents are time varying in nature and to track them using traditional PIs is complex. Rather, the stationary reference is rotated based on the rotor position (which is determined with the help of sensors or from back EMF) to a rotary reference where the components along the axis remain constant and traditional PI controllers can be used to counter any error. This rotation is done using a Park transformation, Where Id and Iq are the in-phase and quadrature phase stator currents from the rotor perspective

Step 4: Once the vectors have become time invariant, we can compare the corresponding axis vectors with the reference and use a PI controller (see equation below) for each axis to determine the error correction signal. The Id reference controls the rotor magnetizing flux. The Iq reference controls the torque output of the motor

Step 5: The corresponding outputs of the PI controllers are then passed through an inverse Park and Clarke transformation to convert them back to the 3-phase stator reference.

Step 6: With the 3-phase reference signals generated, the PWM is modulated using Space Vector Modulation.

6.Experimentation and Results-

1. PCB Layout-

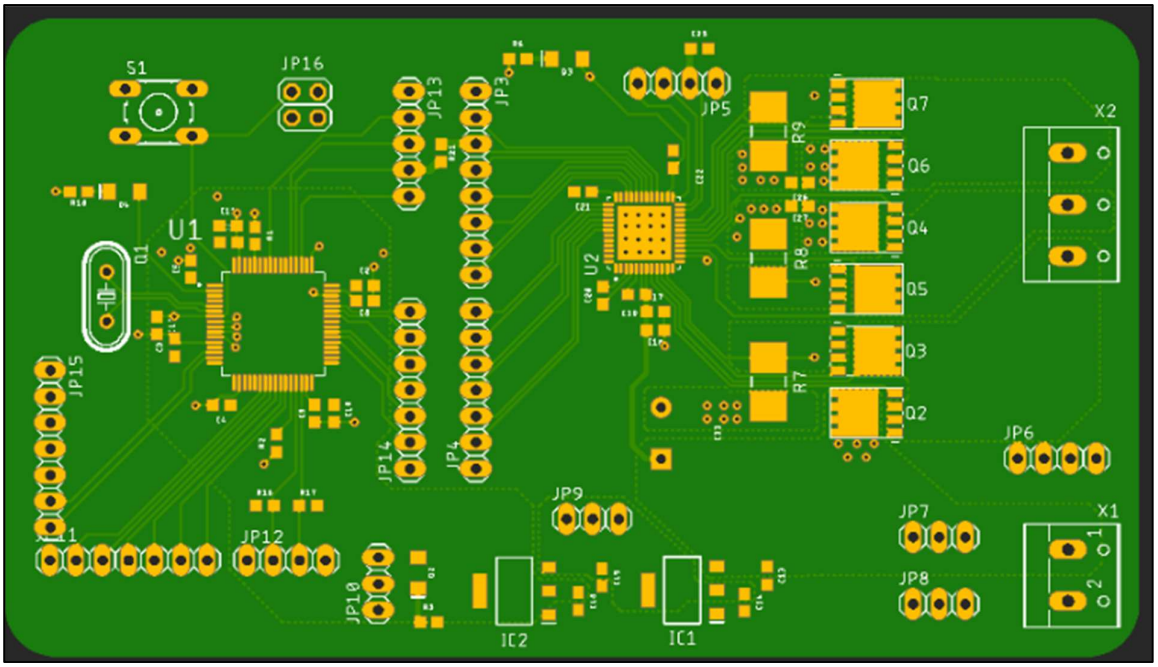

Fig No.7 -Top side of PCB

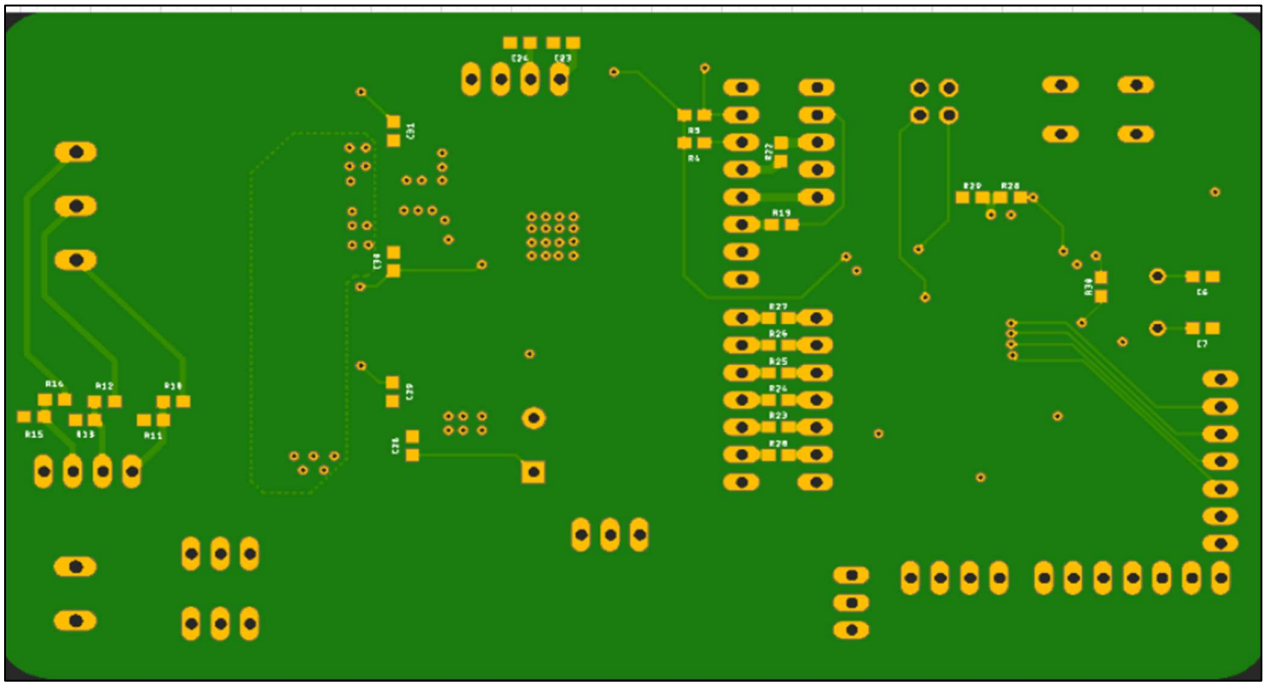

Fig No.8- Bottom side of PCB

2. Connection Diagram-

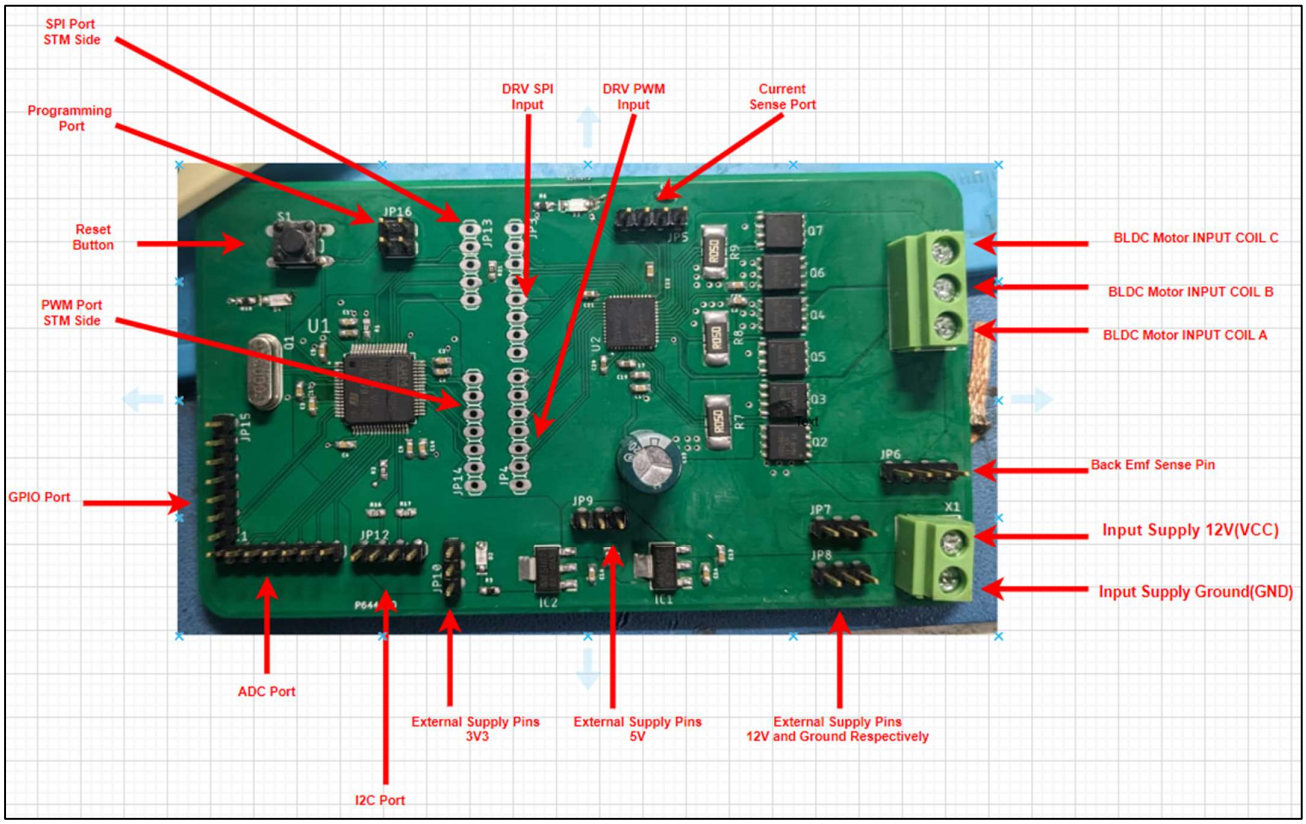

Fig No. 9 – Connection port diagram

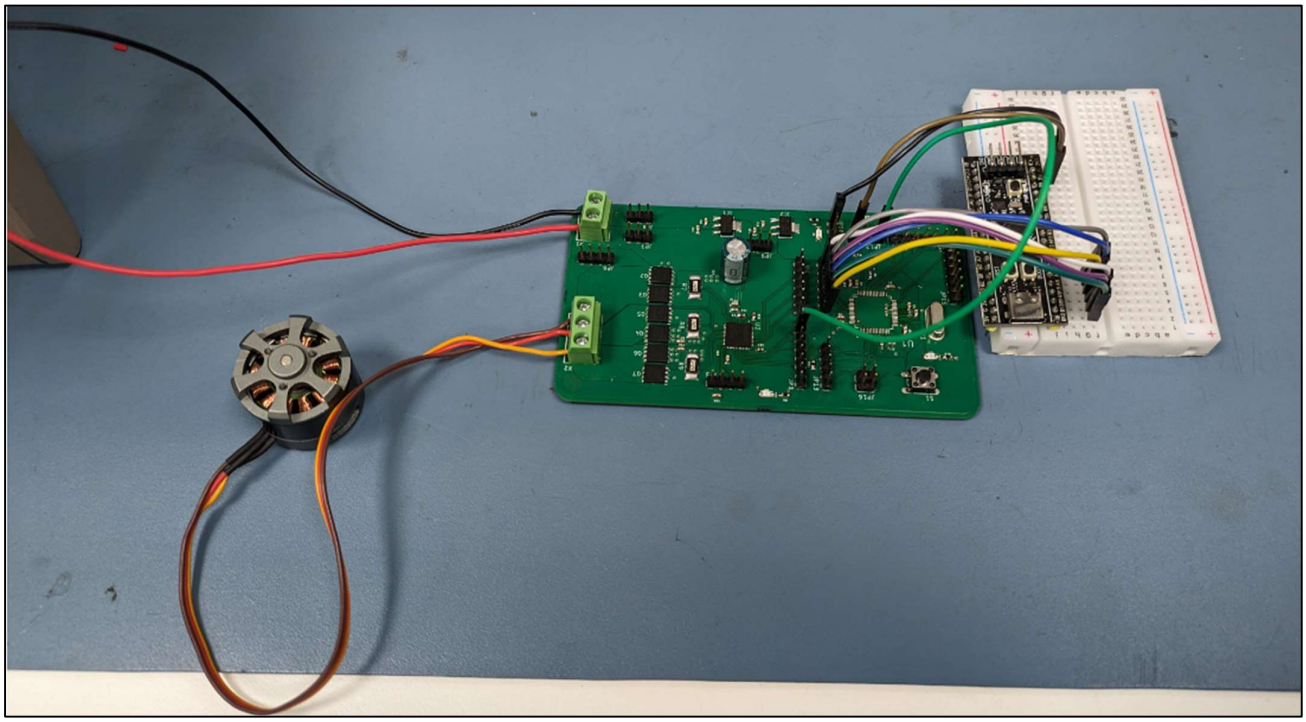

Fig No. 10 – Testing of Motor

6. Conclusion

In this Project, we have Disign & Developped BLDC motor driver specifically for Field-Oriented Control (FOC). Through a combination of innovative hardware design and advanced control algorithms, our driver offers several significant advantages over existing solutions in terms of efficiency, performance, flexibility and cost effectiveness.

Our experimental results demonstrate that the proposed BLDC motor driver achieves superior speed and torque control accuracy, reduce torque ripple, even under varying load conditions. The implementation of FOC allows for smooth and precise operation across a wide range of speeds, enabling applications that demand high responsiveness and reliability.

Furthermore, the modular architecture of our driver facilitates easy integration into diverse systems and platforms, making it adaptable to various industrial and commercial applications. The scalability and robustness of our design lay a solid foundation for future developments and enhancements in BLDC motor control technology.

In conclusion, our Project contributes to the advancement of BLDC motor control by introducing a state-of-the-art driver solution tailored for FOC. The performance and versatility of our driver hold great promise for improving the efficiency and effectiveness of electric propulsion systems in numerous fields, including automotive, aerospace, robotics, and renewable energy.

Looking ahead, we envision further refinements and optimizations to enhance the capabilities and applicability of our BLDC motor driver, paving the way for even greater innovation and impact in the realm of electric motor control.

7. Future Scope

1.Torque Ripple Reduction:Despite achieving notable reductions in torque ripple, further refinement of our control algorithms and hardware design could lead to even more significant improvements. Investigating advanced control strategies, such as predictive algorithms or adaptive tuning techniques, may help mitigate torque ripple to an even greater extent.

2.Integration of Advanced Sensors: Currently We're Using Current Sense sensor and magnetic encode. Incorporating additional sensors, such as strain gauges or vibration sensors, into our motor driver system could enable real-time monitoring of motor performance and health. By leveraging this additional data, we can develop more robust fault detection and predictive maintenance algorithms, enhancing the reliability and longevity of BLDC motor-driven systems.

3.Adaptive Control Strategies: Exploring adaptive control strategies that can dynamically adjust control parameters based on changing operating conditions could further optimize motor performance. Adaptive algorithms capable of adapting to variations in load, temperature, and other environmental factors could enhance efficiency and responsiveness across a broader range of operating conditions.

4.Hardware Optimization: Continued advancements in power electronics and semiconductor technologies offer opportunities for further optimization of the hardware components in our motor driver. Exploring novel materials, packaging techniques, and circuit topologies could lead to improvements in power density, thermal management, and overall system efficiency.

5.Application-Specific Implementations: Tailoring our motor driver design to specific application domains, such as robotics, aerospace, or renewable energy systems, could unlock new opportunities for innovation and impact. Customizing control algorithms, communication interfaces, and form factors to meet the unique requirements of each application could result in more specialized and efficient solutions.

6.Integration with Emerging Technologies:As emerging technologies such as Internet of Things (IoT) and artificial intelligence continue to evolve, exploring synergies between these technologies and BLDC motor control could yield novel solutions with enhanced functionality and intelligence. Integrating our motor driver with IoT platforms for remote monitoring and control or incorporating machine learning algorithms for predictive optimization are promising areas for future exploration.

In summary, the future scope of our Project encompasses a broad range of opportunities for further innovation and advancement in BLDC motor control. By continuing to push the boundaries of technology and exploring new frontiers, we can further enhance the performance, efficiency, and reliability of BLDC motor-driven systems, driving progress towards a more sustainable and interconnected future

8. References

[1] Field Oriented Control Implementation on BLDC Motor Controller with PI and SVPWM using STM32F103C8T6 Sweety Kumari, balasaheb Annasaheb Kardile and Khizar Ahmed Pathan

[2] Design of FOC Brushless DC (BLDC) Motor Controller 1Rohita Lokhande, Prof. Priyanka Dukre, IJSDR ,2020

[3] Comparative analysis of Field oriented control of BLDC motor using SPWM and SVPWM techniques Meghana N Gujjar , Pradeep Kumar , IEEE 2017

[4] Design of a Sensorless Field Oriented Control Drive for Brushless DC Motors, University of Manchester, 2022

[5] A Novel Space Vector PWM Technique for Field Oriented Control of BLDC Motor Drive ,Vinoth Kumar, S. Muruganand, IEEE 2018

[6] Implementation of FOC for BLDC motor using DSP TMS320F28027 Harpreet Kaur, Gurpreet Singh, Pushpinder Singh, IEEE,2020

[7] Performance comparison of PI and Fuzzy logic controllers for BLDC motor drive using FOC technique Manoj Kumar Patel, Sanjeev Gupta, Rajesh Meshram, IEEE 2021

[8] Design and Implementation of FOC for BLDC Motor Drive with Low-Cost Microcontroller Ashish J. Kothari, Sunil R. Chaudhari, IJRCT 2018