```
report_utilization -hierarchical
Copyright 1986-2022 Xilinx, Inc. All Rights Reserved. Copyright 2022-2025 Advanced Micro Devices, Inc. All Rights Reserved.
------------------------------------------------------------------------------------------------------------------------------
| Tool Version : Vivado v.2025.2 (win64) Build 6299465 Fri Nov 14 19:35:11 GMT 2025
| Date         : Sat Apr 11 16:09:30 2026
| Host         : AIPL000325 running 64-bit major release  (build 9200)
| Command      : report_utilization -hierarchical
| Design       : Pipelined_Top
| Device       : xc7a35ticsg324-1L
| Speed File   : -1L
| Design State : Synthesized
------------------------------------------------------------------------------------------------------------------------------

Utilization Design Information

Table of Contents
-----------------
1. Utilization by Hierarchy

1. Utilization by Hierarchy
---------------------------

+-------------------+-----------------+------------+------------+---------+------+-----+--------+--------+------------+
|      Instance     |      Module     | Total LUTs | Logic LUTs | LUTRAMs | SRLs | FFs | RAMB36 | RAMB18 | DSP Blocks |
+-------------------+-----------------+------------+------------+---------+------+-----+--------+--------+------------+
| Pipelined_Top     |           (top) |        896 |        816 |      80 |    0 | 508 |      0 |      0 |          0 |
|   (Pipelined_Top) |           (top) |          0 |          0 |       0 |    0 |   0 |      0 |      0 |          0 |
|   core            |  Pipelined_Core |        852 |        804 |      48 |    0 | 508 |      0 |      0 |          0 |
|     ex_mem        | EX_MEM_Pipeline |          3 |          3 |       0 |    0 | 105 |      0 |      0 |          0 |
|     id_ex         |  ID_EX_Pipeline |        700 |        700 |       0 |    0 | 173 |      0 |      0 |          0 |
|     if_id         |  IF_ID_Pipeline |         32 |         32 |       0 |    0 |  94 |      0 |      0 |          0 |
|     mem_wb        | MEM_WB_Pipeline |         35 |         35 |       0 |    0 | 104 |      0 |      0 |          0 |
+-------------------+-----------------+------------+------------+---------+------+-----+--------+--------+------------+
```

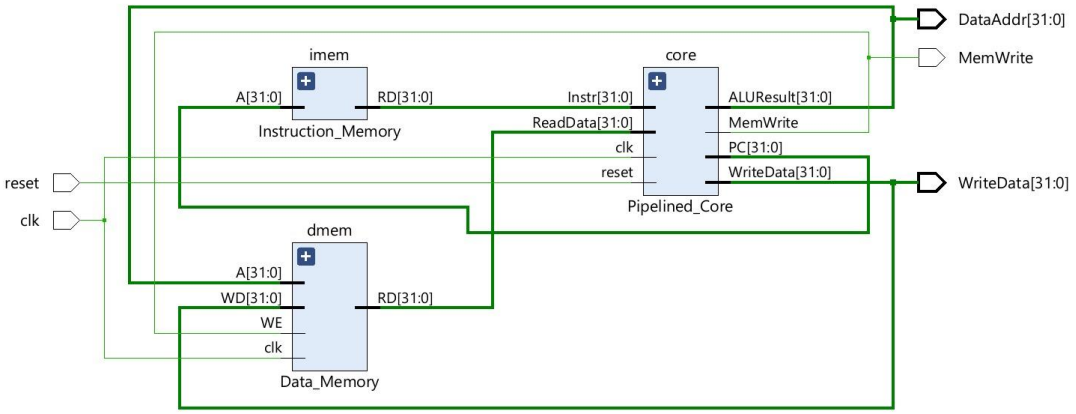

Resource	Estimation	Available	Utilization...
LUT	896	20800	4.31
LUTRAM	80	9600	0.83
FF	508	41600	1.22
IO	67	210	31.90
BUFG	1	32	3.13