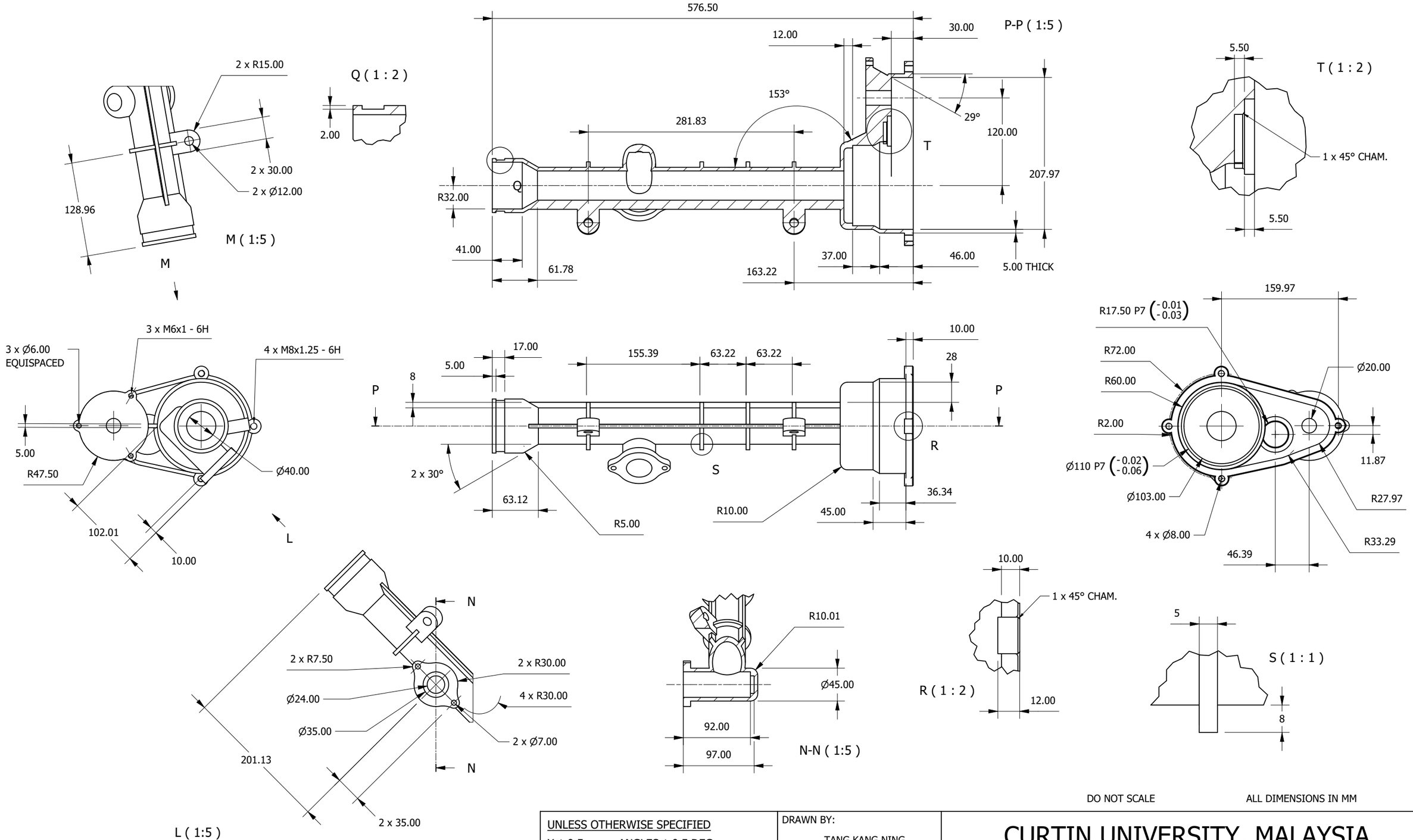

DO NOT SCALE

ALL DIMENSIONS IN MM

UNLESS OTHERWISE SPECIFIED

X ± 0.5 ANGLES ± 0.5 DEG

X.X ± 0.3

X.XX ± 0.1

X.XXX ± 0.05

SURFACE ROUGHNESS Ra1.6μm

SHARP EDGES AND CORNERS R0.3 mm OR 0.3 mm x 45 DEG

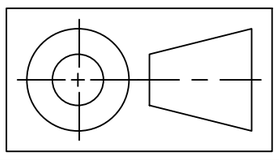

DRAWN BY:	TANG KANG NING
DATE:	18/10/2020
CHECKED BY:	
APPROVED BY:	

CURTIN UNIVERSITY, MALAYSIA

REMARKS:

10/20

PART NUMBER:	DESCRIPTION:
MCEN4000:S1	STEERING RACK GEARBOX (BODY)
SCALE: 1:5	MATERIAL: CAST ALUMINIUM, 518

A3