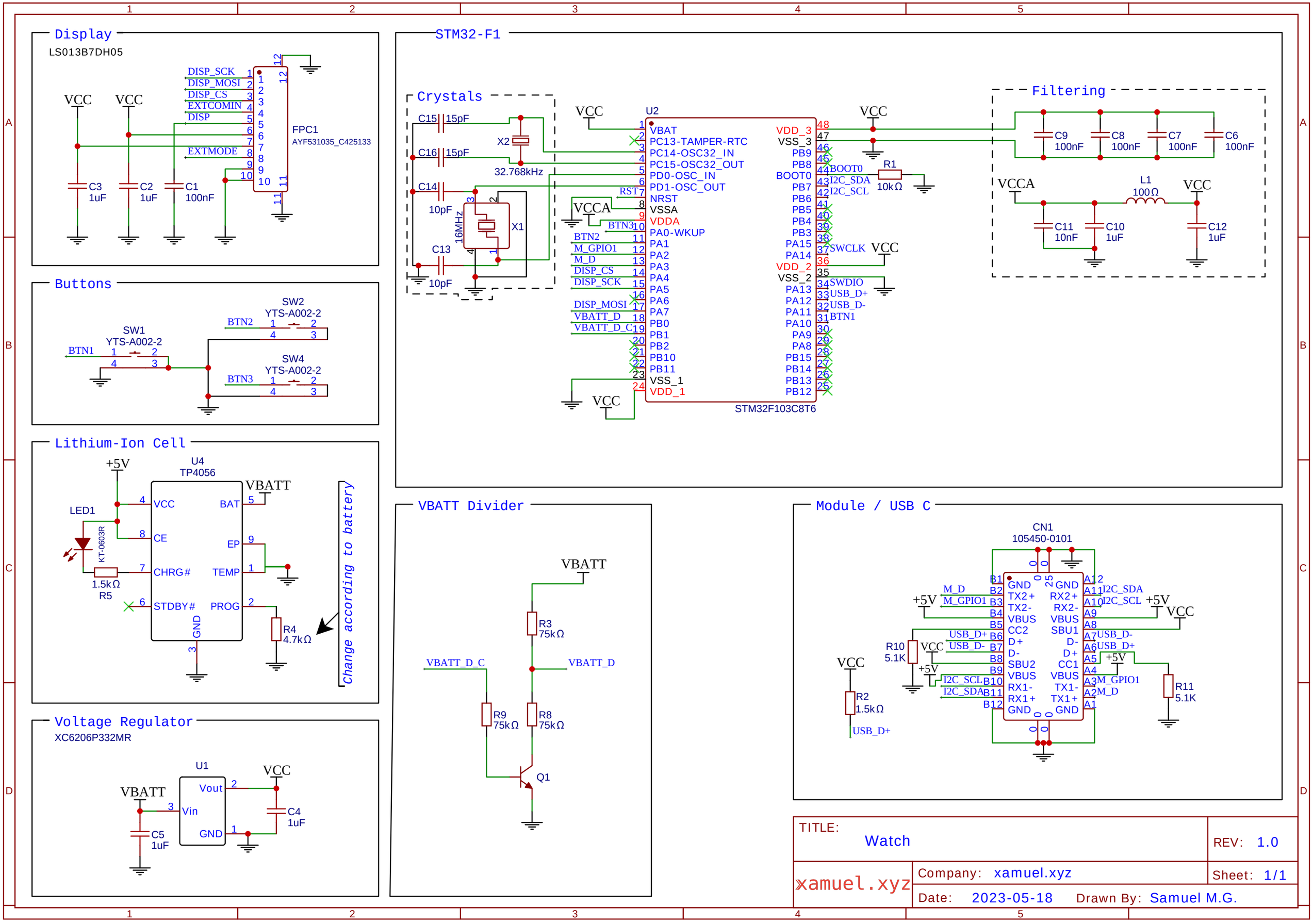
Display
LS013B7DH05
DISP_SCK
DISP_MOSI
DISP_CS
EXTCOMIN
DISP
EXTMODE
VCC
VCC
FPC1
AYF531035_C425133
C3 1uF
C2 1uF
C1 100nF
Buttons
SW1 YTS-A002-2
SW2 YTS-A002-2
SW4 YTS-A002-2
BTN1
BTN2
BTN3
Lithium-Ion Cell
+5V
U4 TP4056
VBATT
LED1
KT-0603R
1.5kΩ R5
VCC
CE
CHRG#
STDBY#
GND
BAT
EP
TEMP
PROG
R4 4.7kΩ
Change according to battery
Voltage Regulator
XC6206P332MR
U1
VBATT
Vout
Vin
GND
VCC
C5 1uF
C4 1uF
STM32-F1
Crystals
C15 15pF
C16 15pF
C14 10pF
C13 10pF
X2
32.768kHz
X1
16MHz
U2
VCC
VCCA
VBAT
PC13-TAMPER-RTC
PC14-OSC32_IN
PC15-OSC32_OUT
PD0-OSC_IN
PD1-OSC_OUT
NRST
VSSA
VDDA
PA0-WKUP
PA1
PA2
PA3
PA4
PA5
PA6
PA7
PB0
PB1
PB2
PB10
PB11
VSS_1
VDD_1
VDD_3
VSS_3
PB9
PB8
BOOT0
PB7
PB6
PB5
PB4
PB3
PA15
PA14
VDD_2
VSS_2
PA13
PA12
PA11
PA10
PA9
PA8
PB15
PB14
PB13
PB12
BOOT0
I2C_SDA
I2C_SCL
R1 10kΩ
SWCLK
SWDIO
USB_D+
USB_D-
BTN1
BTN2
M_GPIO1
M_D
DISP_CS
DISP_SCK
DISP_MOSI
VBATT_D
VBATT_D_C
STM32F103C8T6
Filtering
C9 100nF
C8 100nF
C7 100nF
C6 100nF
VCCA
L1 100Ω
C11 10nF
C10 1uF
C12 1uF
VBATT Divider
VBATT
R3 75kΩ
VBATT_D_C
VBATT_D
R9 75kΩ
R8 75kΩ
Q1
Module / USB C
CN1
105450-0101
GND
TX2+
TX2-
VBUS
CC2
D+
D-
SBU2
VBUS
RX1-
RX1+
GND
RX2+
RX2-
VBUS
SBU1
D-
D+
CC1
VBUS
TX1-
TX1+
GND
M_D
M_GPIO1
USB_D+
USB_D-
I2C_SCL
I2C_SDA
+5V
VCC
R10 5.1K
R11 5.1K
R2 1.5kΩ
USB_D+
TITLE:
Watch
REV: 1.0
xamuel.xyz
Company: xamuel.xyz
Sheet: 1/1
Date: 2023-05-18
Drawn By: Samuel M.G.