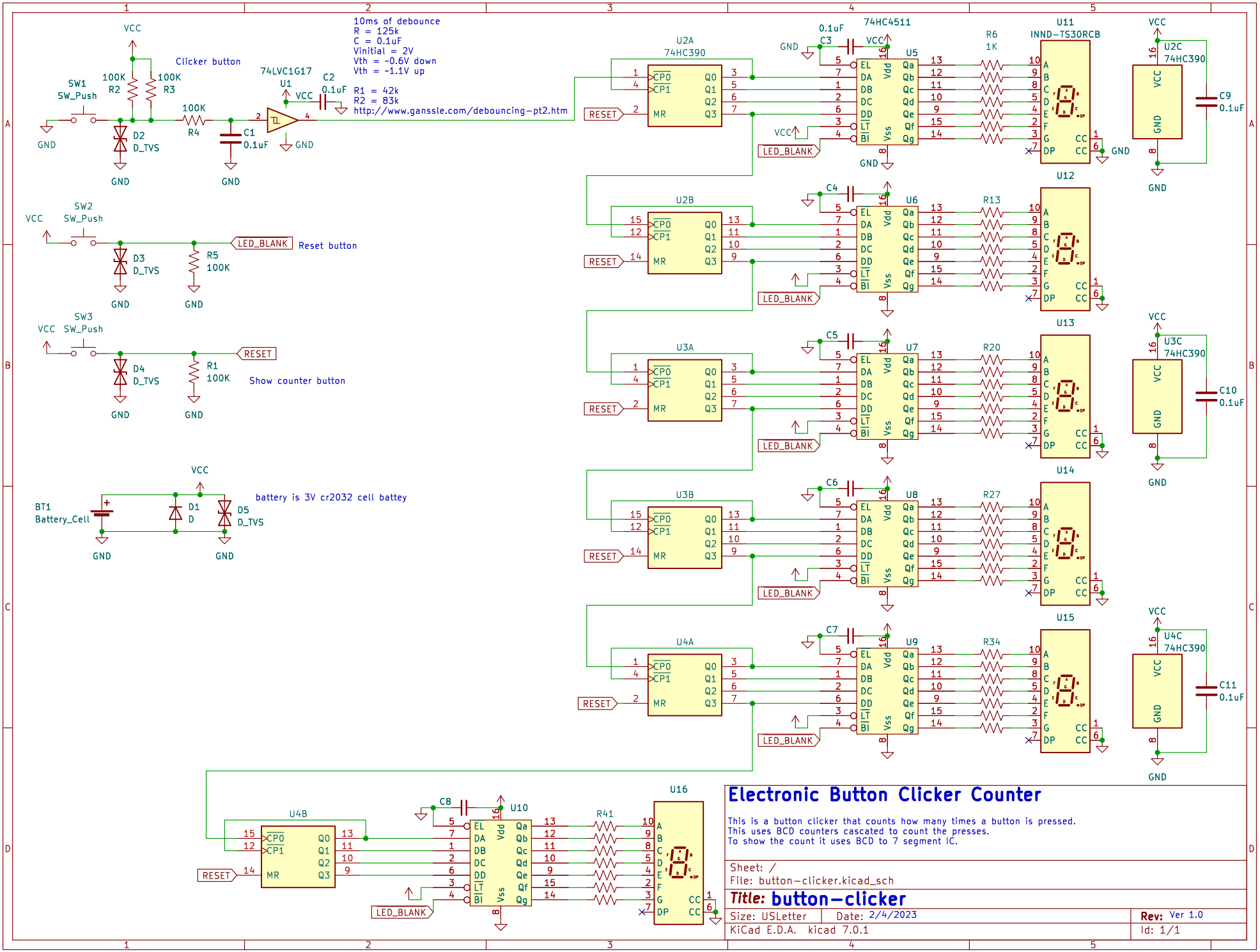
Clicker button
SW1
SW_Push
100K
R2
100K
R3
D2
D_TVS
100K
R4
C1
0.1uF
74LVC1G17
U1
C2
0.1uF
10ms of debounce
R = 125k
C = 0.1uF
Vinitial = 2V
Vth = ~0.6V down
Vth = ~1.1V up
R1 = 42k
R2 = 83k
http://www.ganssle.com/debouncing-pt2.htm
SW2
SW_Push
D3
D_TVS
R5
100K
LED_BLANK
Reset button
SW3
SW_Push
D4
D_TVS
R1
100K
RESET
Show counter button
BT1
Battery_Cell
D1
D
D5
D_TVS
battery is 3V cr2032 cell battey
U2A
74HC390
U2B
U3A
U3B
U4A
U4B
74HC4511
U5
U6
U7
U8
U9
U10
U11
INND-TS30RCB
U12
U13
U14
U15
U16
U2C
74HC390
U3C
74HC390
U4C
74HC390
C3
0.1uF
C4
C5
C6
C7
C8
C9
0.1uF
C10
0.1uF
C11
0.1uF
R6
1K
R13
R20
R27
R34
R41
Electronic Button Clicker Counter
This is a button clicker that counts how many times a button is pressed.
This uses BCD counters cascated to count the presses.
To show the count it uses BCD to 7 segment IC.
Sheet: /
File: button-clicker.kicad_sch
Title: button-clicker
Size: USLetter
Date: 2/4/2023
Rev: Ver 1.0
KiCad E.D.A. kicad 7.0.1
Id: 1/1