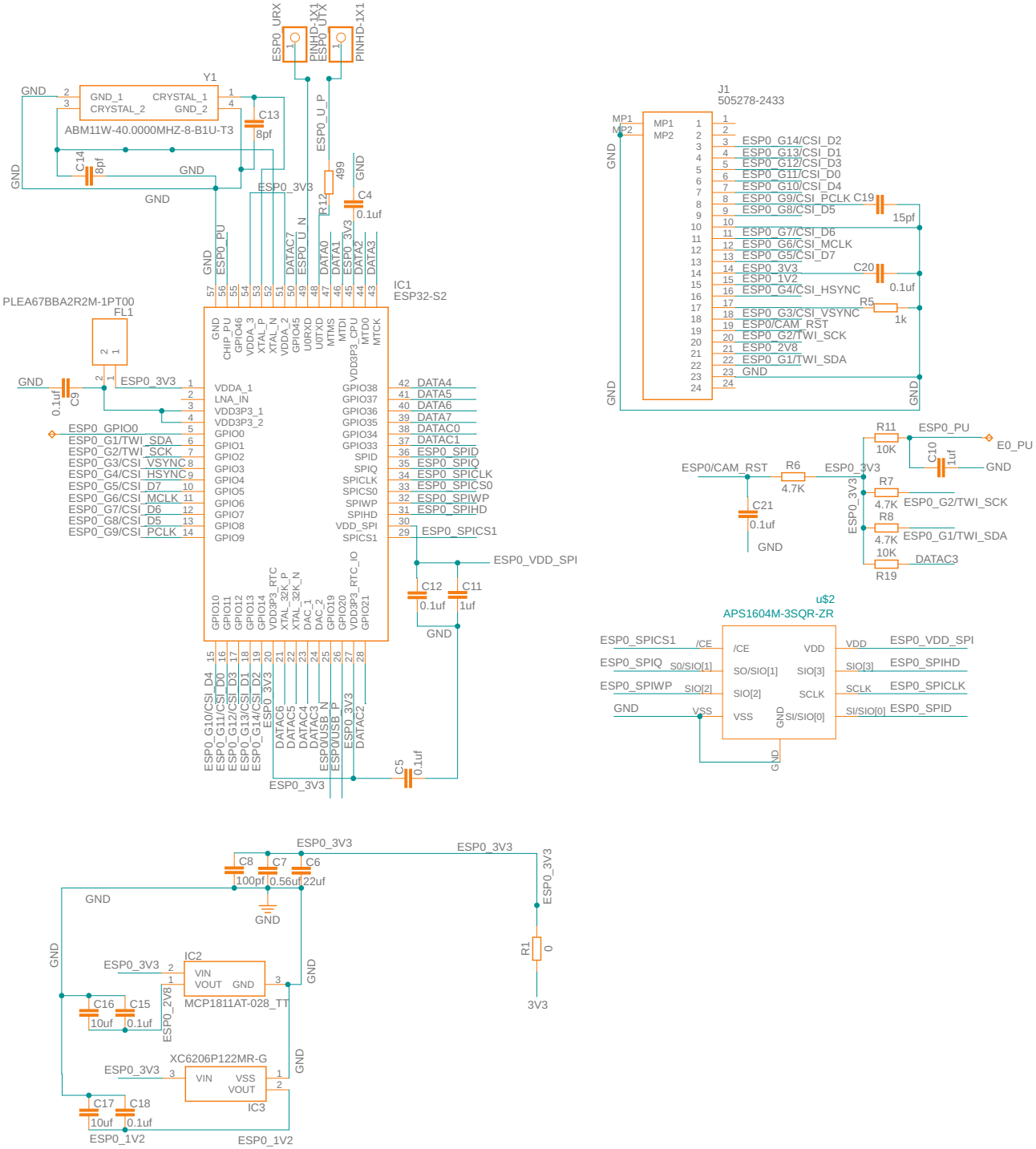
ESP0_URX
PINHD-1X1
ESP0_UTX
PINHD-1X1
Y1
GND
GND_1
CRYSTAL_1
CRYSTAL_2
GND_2
ABM11W-40.0000MHZ-8-B1U-T3
C13
8pf
C14
8pf
GND
ESP0_U_P
499
R12
C4
0.1uf
ESP0_3V3
ESP0_PU
DATAC7
ESP0_U_N
DATA0
DATA1
ESP0_3V3
DATA2
DATA3
IC1
ESP32-S2
PLEA67BBA2R2M-1PT00
FL1
C9
0.1uf
ESP0_GPIO0
ESP0_G1/TWI_SDA
ESP0_G2/TWI_SCK
ESP0_G3/CSI_VSYNC
ESP0_G4/CSI_HSYNC
ESP0_G5/CSI_D7
ESP0_G6/CSI_MCLK
ESP0_G7/CSI_D6
ESP0_G8/CSI_D5
ESP0_G9/CSI_PCLK
VDDA_1
LNA_IN
VDD3P3_1
VDD3P3_2
GPIO0
GPIO1
GPIO2
GPIO3
GPIO4
GPIO5
GPIO6
GPIO7
GPIO8
GPIO9
GPIO38
GPIO37
GPIO36
GPIO35
GPIO34
GPIO33
SPID
SPIQ
SPICLK
SPICS0
SPIWP
SPIHD
VDD_SPI
SPICS1
DATA4
DATA5
DATA6
DATA7
DATAC0
DATAC1
ESP0_SPID
ESP0_SPIQ
ESP0_SPICLK
ESP0_SPICS0
ESP0_SPIWP
ESP0_SPIHD
ESP0_SPICS1
ESP0_VDD_SPI
C12
0.1uf
C11
1uf
ESP0_G10/CSI_D4
ESP0_G11/CSI_D0
ESP0_G12/CSI_D3
ESP0_G13/CSI_D1
ESP0_G14/CSI_D2
ESP0_3V3
DATAC6
DATAC5
DATAC4
DATAC3
ESP0USB_N
ESP0USB_P
ESP0_3V3
DATAC2
C5
0.1uf
J1
505278-2433
MP1
MP2
ESP0_G14/CSI_D2
ESP0_G13/CSI_D1
ESP0_G12/CSI_D3
ESP0_G11/CSI_D0
ESP0_G10/CSI_D4
ESP0_G9/CSI_PCLK
ESP0_G8/CSI_D5
C19
15pf
ESP0_G7/CSI_D6
ESP0_G6/CSI_MCLK
ESP0_G5/CSI_D7
ESP0_3V3
C20
0.1uf
ESP0_1V2
ESP0_G4/CSI_HSYNC
R5
1k
ESP0_G3/CSI_VSYNC
ESP0/CAM_RST
ESP0_G2/TWI_SCK
ESP0_2V8
ESP0_G1/TWI_SDA
GND
R11
10K
ESP0_PU
E0_PU
C10
1uf
ESP0/CAM_RST
R6
4.7K
ESP0_3V3
C21
0.1uf
R7
4.7K
ESP0_G2/TWI_SCK
R8
4.7K
ESP0_G1/TWI_SDA
10K
DATAC3
R19
u$2
APS1604M-3SQR-ZR
ESP0_SPICS1
/CE
ESP0_SPIQ
S0/SIO[1]
ESP0_SPIWP
SIO[2]
GND
VSS
VDD
SIO[3]
SCLK
SI/SIO[0]
ESP0_VDD_SPI
ESP0_SPIHD
ESP0_SPICLK
ESP0_SPID
C8
100pf
C7
0.56uf
C6
22uf
IC2
VIN
VOUT
MCP1811AT-028_TT
C16
10uf
C15
0.1uf
XC6206P122MR-G
IC3
C17
10uf
C18
0.1uf
ESP0_1V2
R1
0
3V3

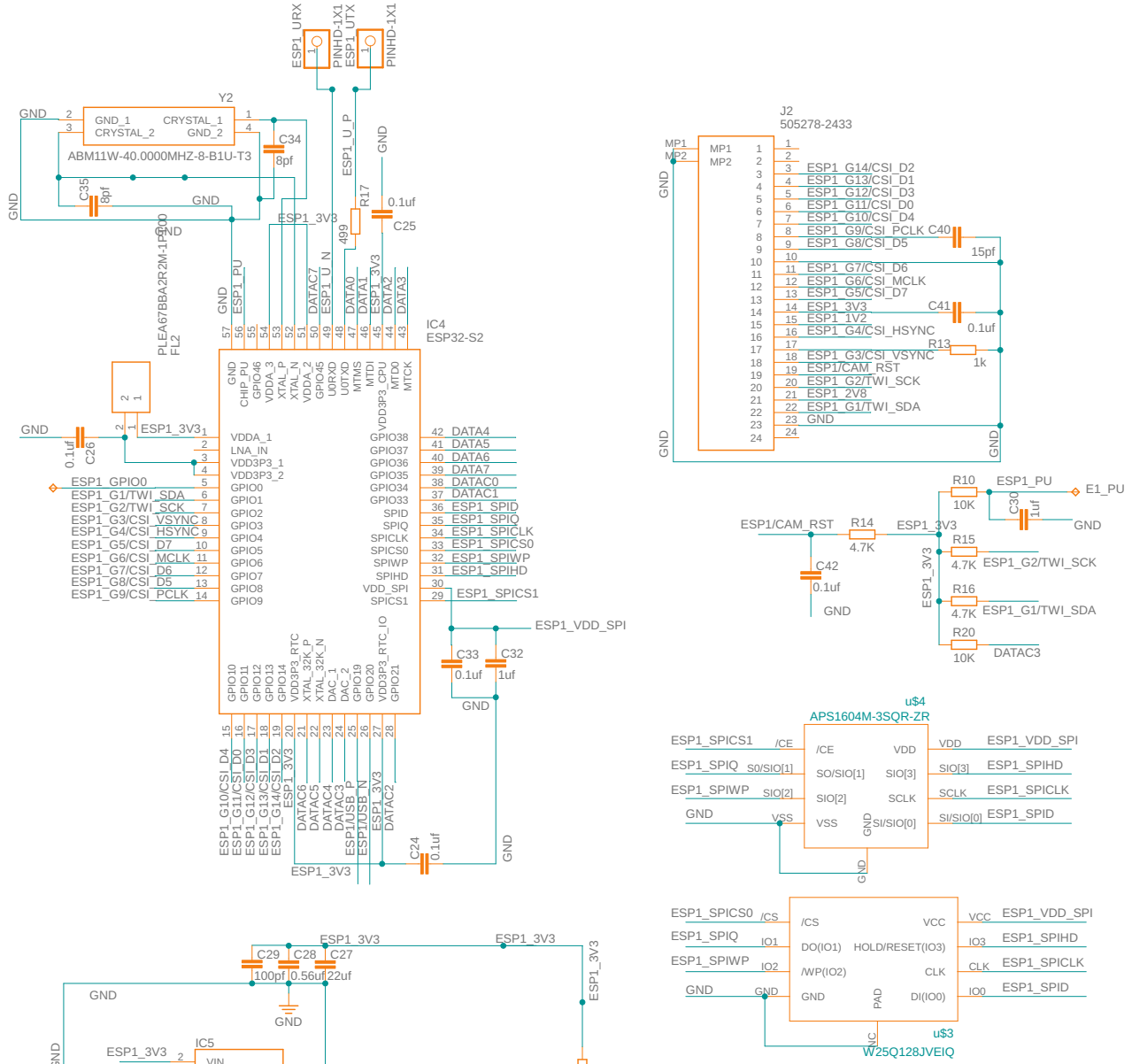
ESP1_URX
PINHD-1X1
ESP1_UTX
PINHD-1X1
Y2
GND_1
CRYSTAL_1
CRYSTAL_2
GND_2
ABM11W-40.0000MHZ-8-B1U-T3
C34
8pf
C35
8pf
GND
ESP1_U_P
ESP1_U_N
R17
499
0.1uf
C25
ESP1_3V3
PLEA67BBA2R2M-1P100
FL2
ESP1_PU
DATACZ
DATA0
DATA1
DATA2
DATA3
IC4
ESP32-S2
VDDA_1
LNA_IN
VDD3P3_1
VDD3P3_2
GPIO0
GPIO1
GPIO2
GPIO3
GPIO4
GPIO5
GPIO6
GPIO7
GPIO8
GPIO9
GPIO38
GPIO37
GPIO36
GPIO35
GPIO34
GPIO33
SPID
SPIQ
SPICLK
SPICS0
SPIWP
SPIHD
VDD_SPI
SPICS1
DATA4
DATA5
DATA6
DATA7
DATAC0
DATAC1
ESP1_SPID
ESP1_SPIQ
ESP1_SPICLK
ESP1_SPICS0
ESP1_SPIWP
ESP1_SPIHD
ESP1_SPICS1
ESP1_VDD_SPI
C33
0.1uf
C32
1uf
C24
0.1uf
ESP1_GPIO0
ESP1_G1/TWI_SDA
ESP1_G2/TWI_SCK
ESP1_G3/CSI_VSYNC
ESP1_G4/CSI_HSYNC
ESP1_G5/CSI_D7
ESP1_G6/CSI_MCLK
ESP1_G7/CSI_D6
ESP1_G8/CSI_D5
ESP1_G9/CSI_PCLK
ESP1_G10/CSI_D4
ESP1_G11/CSI_D0
ESP1_G12/CSI_D3
ESP1_G13/CSI_D1
ESP1_G14/CSI_D2
DATAC6
DATAC5
DATAC4
DATAC3
ESP1/USB_P
ESP1/USB_N
DATAC2
J2
505278-2433
MP1
MP2
ESP1_G14/CSI_D2
ESP1_G13/CSI_D1
ESP1_G12/CSI_D3
ESP1_G11/CSI_D0
ESP1_G10/CSI_D4
ESP1_G9/CSI_PCLK
ESP1_G8/CSI_D5
ESP1_G7/CSI_D6
ESP1_G6/CSI_MCLK
ESP1_G5/CSI_D7
ESP1_3V3
ESP1_1V2
ESP1_G4/CSI_HSYNC
ESP1/CAM_RST
ESP1_G3/CSI_VSYNC
ESP1_G2/TWI_SCK
ESP1_2V8
ESP1_G1/TWI_SDA
C40
15pf
C41
0.1uf
R13
1k
R10
10K
ESP1_PU
E1_PU
C30
1uf
R14
4.7K
R15
4.7K
R16
4.7K
R20
10K
DATAC3
C42
0.1uf
u$4
APS1604M-3SQR-ZR
/CE
SO/SIO[1]
SIO[2]
VSS
VDD
SIO[3]
SCLK
SI/SIO[0]
u$3
W25Q128JVEIQ
/CS
DO(IO1)
/WP(IO2)
GND
VCC
HOLD/RESET(IO3)
CLK
DI(IO0)
PAD
IC5
MCP1811AT-028_TT
VIN
VOUT
C29
100pf
C28
0.56uf
C27
22uf
C37
10uf
C36
0.1uf
XC6206P122MR-G
IC6
C38
10uf
C39
0.1uf
R2
0
3V3

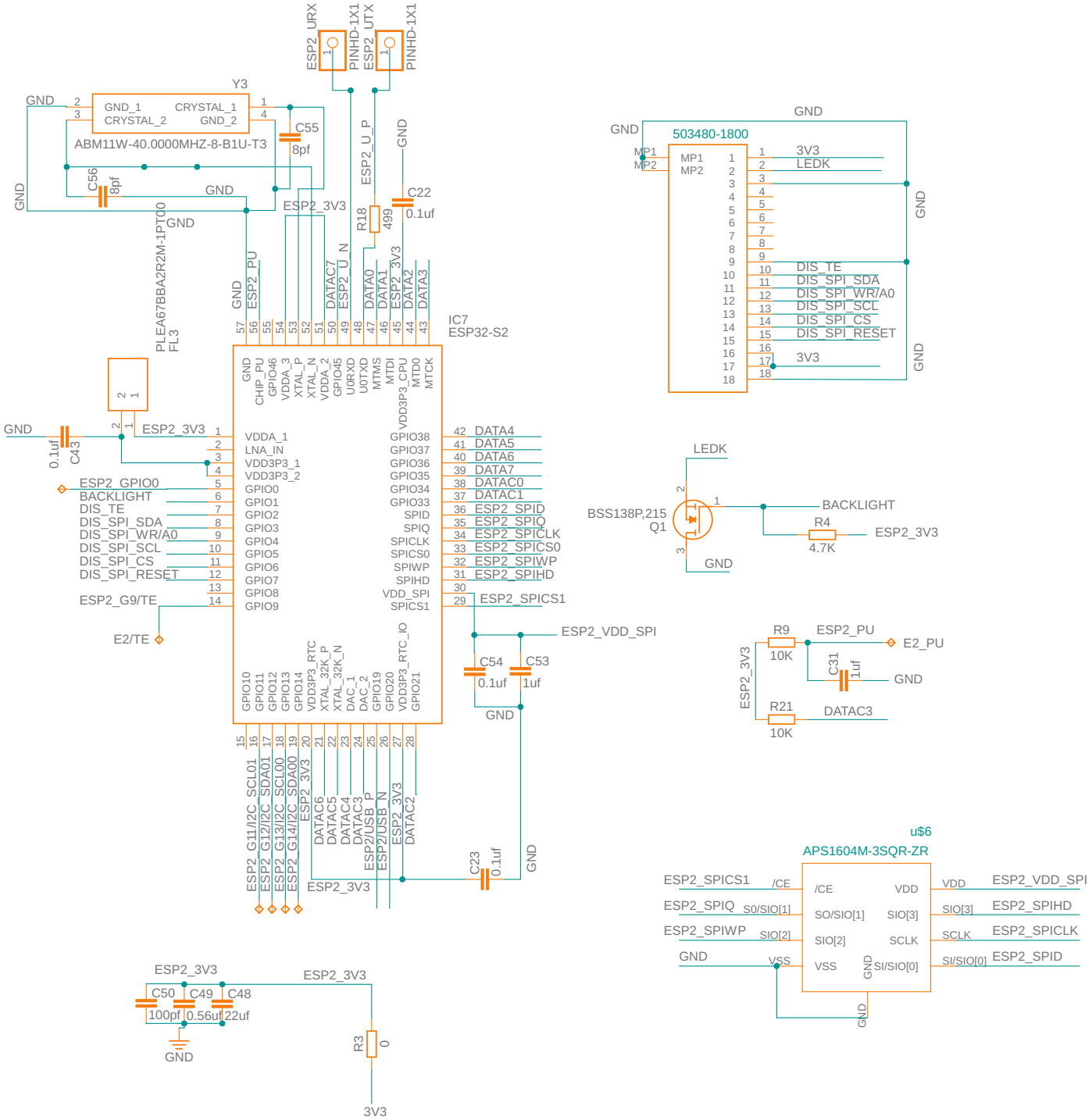
ESP2_URX
PINHD-1X1
ESP2_UTX
PINHD-1X1
Y3
GND_1
CRYSTAL_1
CRYSTAL_2
GND_2
ABM11W-40.0000MHZ-8-B1U-T3
C55
8pf
C56
8pf
GND
ESP2_3V3
ESP2_U_P
R18
499
C22
0.1uf
PLEA67BBA2R2M-1PT00
FL3
IC7
ESP32-S2
VDDA_1
LNA_IN
VDD3P3_1
VDD3P3_2
GPIO0
GPIO1
GPIO2
GPIO3
GPIO4
GPIO5
GPIO6
GPIO7
GPIO8
GPIO9
GPIO38
GPIO37
GPIO36
GPIO35
GPIO34
GPIO33
SPID
SPIQ
SPICLK
SPICS0
SPIWP
SPIHD
VDD_SPI
SPICS1
DATA4
DATA5
DATA6
DATA7
DATAC0
DATAC1
ESP2_SPID
ESP2_SPIQ
ESP2_SPICLK
ESP2_SPICS0
ESP2_SPIWP
ESP2_SPIHD
ESP2_SPICS1
ESP2_VDD_SPI
C54
0.1uf
C53
1uf
C23
0.1uf
ESP2_GPIO0
BACKLIGHT
DIS_TE
DIS_SPI_SDA
DIS_SPI_WR/A0
DIS_SPI_SCL
DIS_SPI_CS
DIS_SPI_RESET
ESP2_G9/TE
E2/TE
C43
0.1uf
ESP2_G11/I2C_SCL01
ESP2_G12/I2C_SDA01
ESP2_G13/I2C_SCL00
ESP2_G14/I2C_SDA00
DATAC6
DATAC5
DATAC4
DATAC3
ESP2/USB_P
ESP2/USB_N
DATAC2
503480-1800
MP1
MP2
3V3
LEDK
DIS_TE
DIS_SPI_SDA
DIS_SPI_WR/A0
DIS_SPI_SCL
DIS_SPI_CS
DIS_SPI_RESET
BSS138P,215
Q1
BACKLIGHT
R4
4.7K
R9
10K
ESP2_PU
E2_PU
C31
1uf
R21
10K
DATAC3
u$6
APS1604M-3SQR-ZR
/CE
SO/SIO[1]
SIO[2]
VSS
VDD
SIO[3]
SCLK
SI/SIO[0]
ESP2_SPICS1
ESP2_SPIQ
ESP2_SPIWP
ESP2_VDD_SPI
ESP2_SPIHD
ESP2_SPICLK
ESP2_SPID
C50
100pf
C49
0.56uf
C48
22uf
R3
0

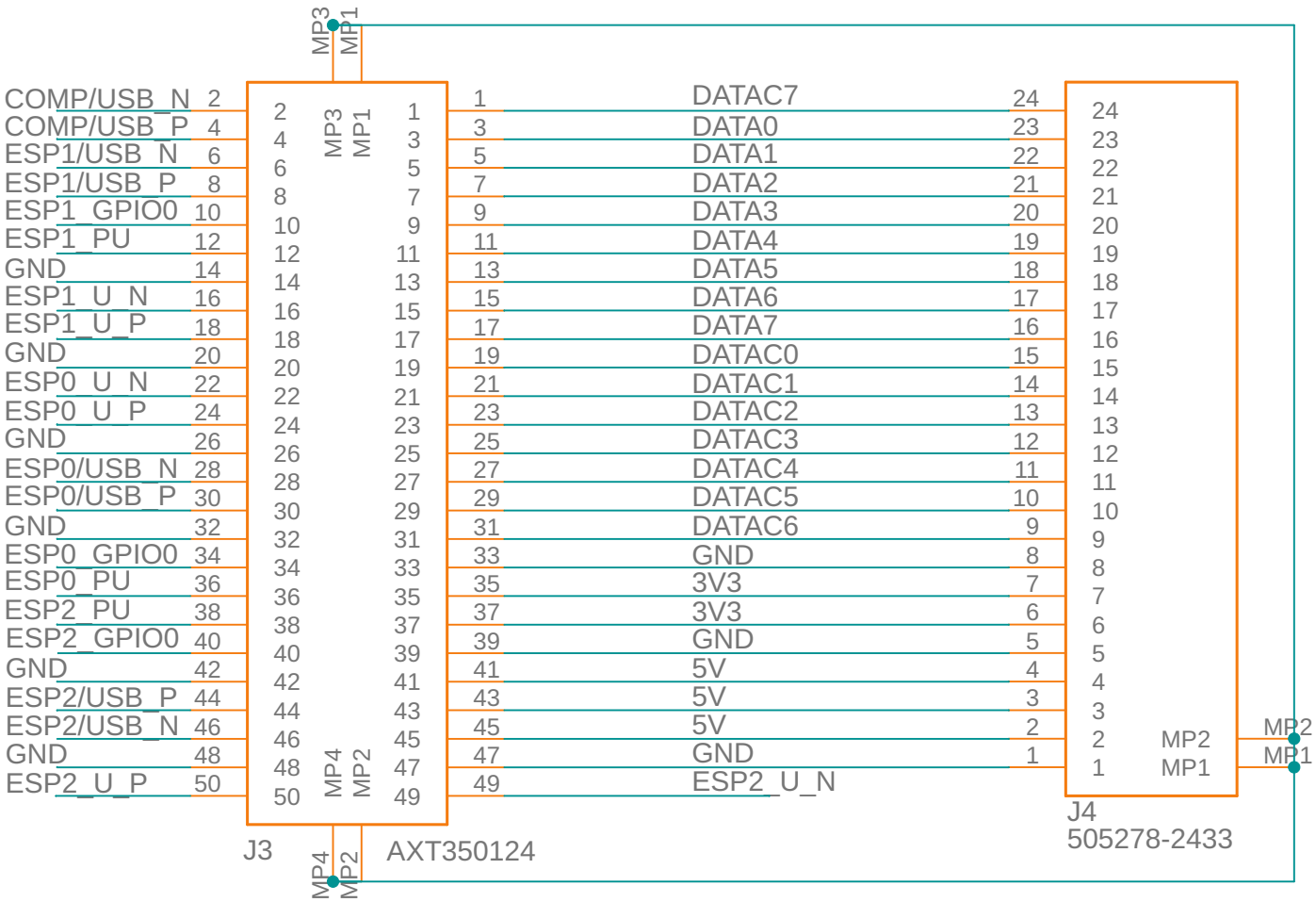
J3
AXT350124
COMP/USB_N 2
COMP/USB_P 4
ESP1/USB_N 6
ESP1/USB_P 8
ESP1_GPIO0 10
ESP1_PU 12
GND 14
ESP1_U_N 16
ESP1_U_P 18
GND 20
ESP0_U_N 22
ESP0_U_P 24
GND 26
ESP0/USB_N 28
ESP0/USB_P 30
GND 32
ESP0_GPIO0 34
ESP0_PU 36
ESP2_PU 38
ESP2_GPIO0 40
GND 42
ESP2/USB_P 44
ESP2/USB_N 46
GND 48
ESP2_U_P 50
MP3 MP1
MP4 MP2
1 DATAC7
3 DATA0
5 DATA1
7 DATA2
9 DATA3
11 DATA4
13 DATA5
15 DATA6
17 DATA7
19 DATAC0
21 DATAC1
23 DATAC2
25 DATAC3
27 DATAC4
29 DATAC5
31 DATAC6
33 GND
35 3V3
37 3V3
39 GND
41 5V
43 5V
45 5V
47 GND
49 ESP2_U_N
J4
505278-2433
MP2
MP1

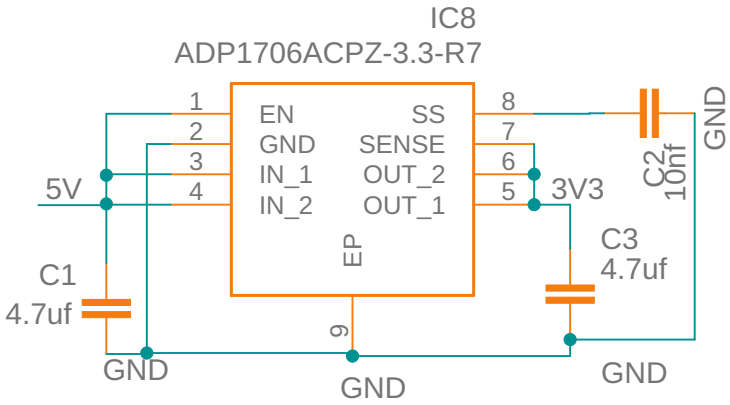
IC8
ADP1706ACPZ-3.3-R7
EN
GND
IN_1
IN_2
SS
SENSE
OUT_2
OUT_1
EP
5V
3V3
C1
4.7uf
C2
10nf
C3
4.7uf
GND

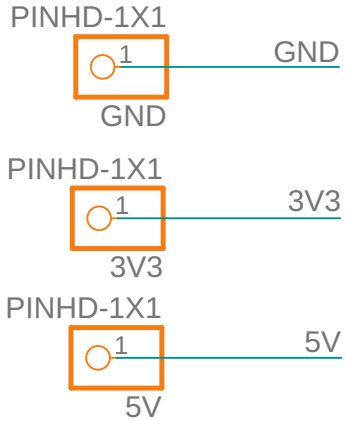
PINHD-1X1
GND
PINHD-1X1
3V3
PINHD-1X1
5V