Power Supply/Voltage Regulators

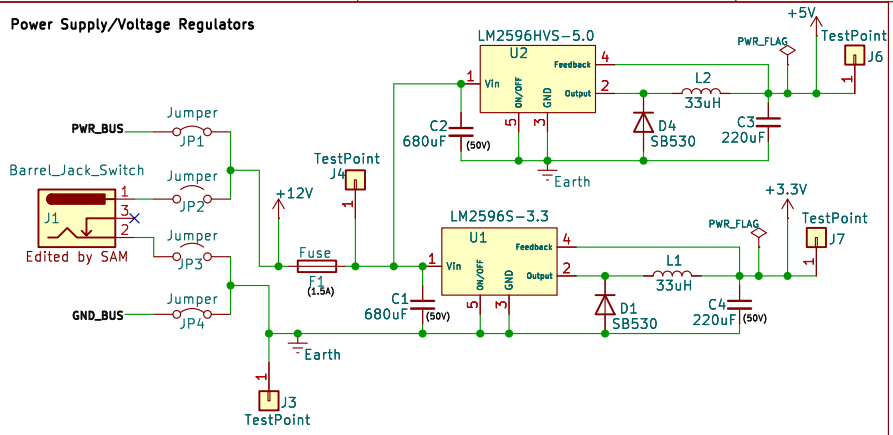

Team Ribbon Cable Connectors

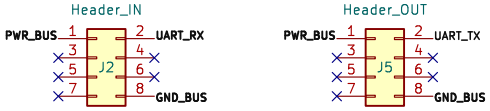

MPLAB Snap Programming/Debugging Tool

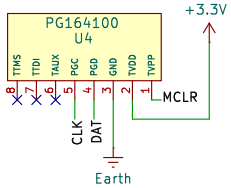

TF-Luna Single Point LiDAR Sensor

I2C Addresses

Default: 0x10
Write: 0x20
Read: 0x21

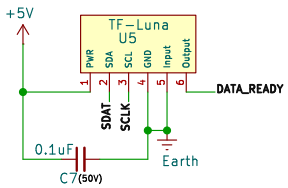

PIC18F47K42-E/PT Microcontroller

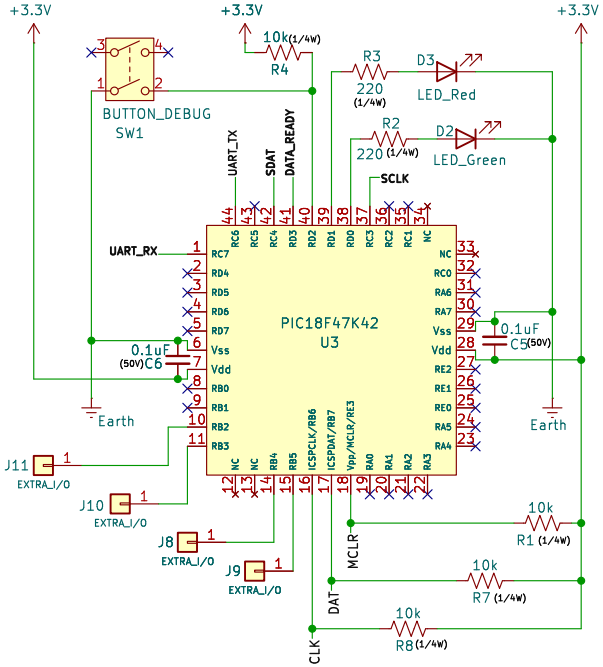

Team 201: Droat

Sheet: /
File: EGR314-IndividualSubsystemDesign-SAM.kicad_sch

Title: Single-Point LiDAR Distance Sensing Subsystem Design

Size: A4	Date: 2026-03-02	Rev: 4
KiCad E.D.A. 9.0.5		Id: 1/1