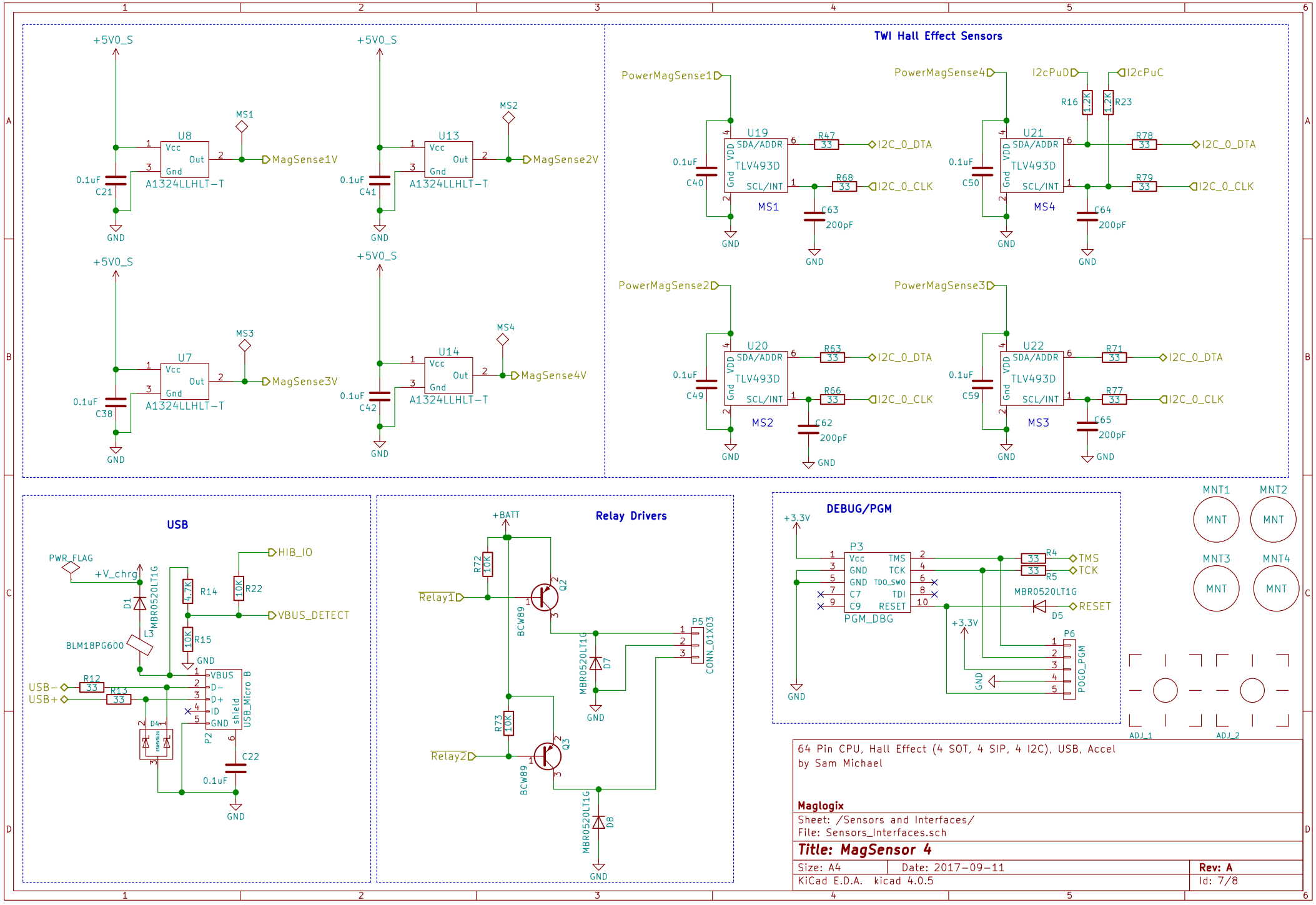
TWI Hall Effect Sensors
+5V0_S
U8
Vcc
Out
Gnd
A1324LLHLT-T
MS1
MagSense1V
0.1uF
C21
GND
U13
MS2
MagSense2V
C41
U7
MS3
MagSense3V
C38
U14
MS4
MagSense4V
C42
PowerMagSense1
U19
SDA/ADDR
TLV493D
SCL/INT
VDD
R47
33
I2C_0_DTA
R68
I2C_0_CLK
C40
C63
200pF
PowerMagSense4
U21
I2cPuD
I2cPuC
R16
1.2K
R23
R78
R79
C50
C64
PowerMagSense2
U20
R63
R66
C49
C62
PowerMagSense3
U22
R71
R77
C59
C65
USB
PWR_FLAG
+V_chrg
D1
MBR0520LT1G
L3
BLM18PG600
R14
4.7K
R22
10K
HIB_IO
VBUS_DETECT
R15
R12
R13
USB-
USB+
D4
ESD9B5.0ST5G
P2
VBUS
D-
D+
ID
shield
USB_Micro_B
C22
Relay Drivers
+BATT
R72
Relay1
Q2
BCW89
P5
CONN_01X03
D7
R73
Relay2
Q3
D8
DEBUG/PGM
+3.3V
P3
Vcc
GND
C7
C9
TMS
TCK
TDO_SWO
TDI
RESET
PGM_DBG
R4
R5
D5
P6
POGO_PGM
MNT1
MNT2
MNT3
MNT4
MNT
ADJ_1
ADJ_2
64 Pin CPU, Hall Effect (4 SOT, 4 SIP, 4 I2C), USB, Accel
by Sam Michael
Maglogix
Sheet: /Sensors and Interfaces/
File: Sensors_Interfaces.sch
Title: MagSensor 4
Size: A4
Date: 2017-09-11
Rev: A
KiCad E.D.A. kicad 4.0.5
Id: 7/8