Coordinate system defined as per CubeSat Design Specification Rev. 14.1 - origin at geometric centre of bus.

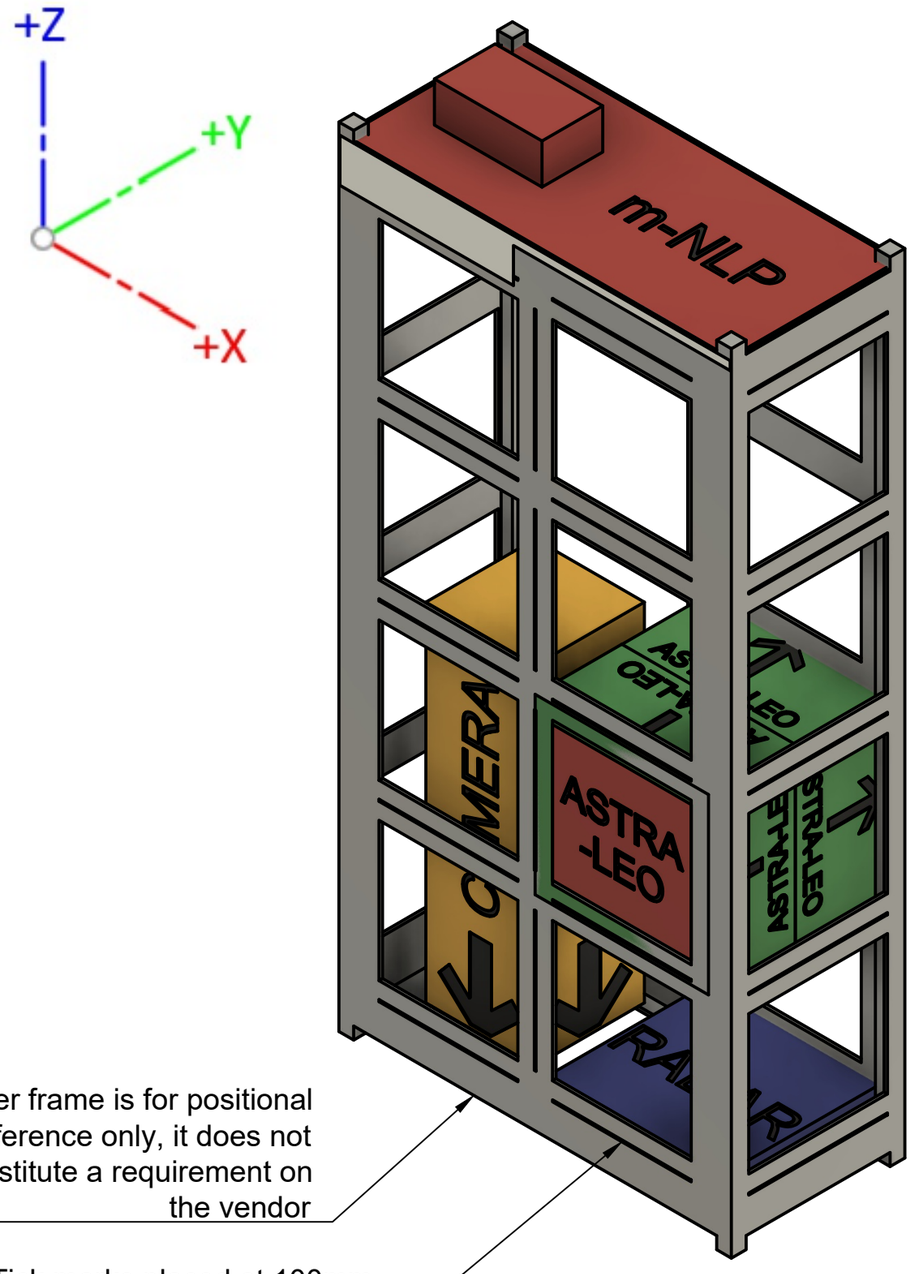

Outer frame is for positional reference only, it does not constitute a requirement on the vendor
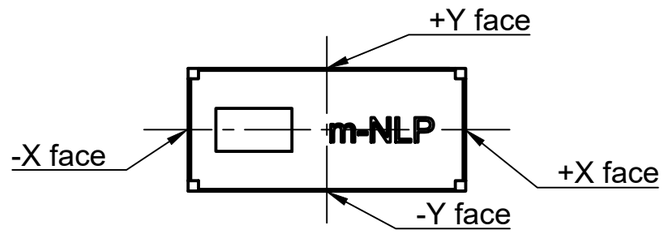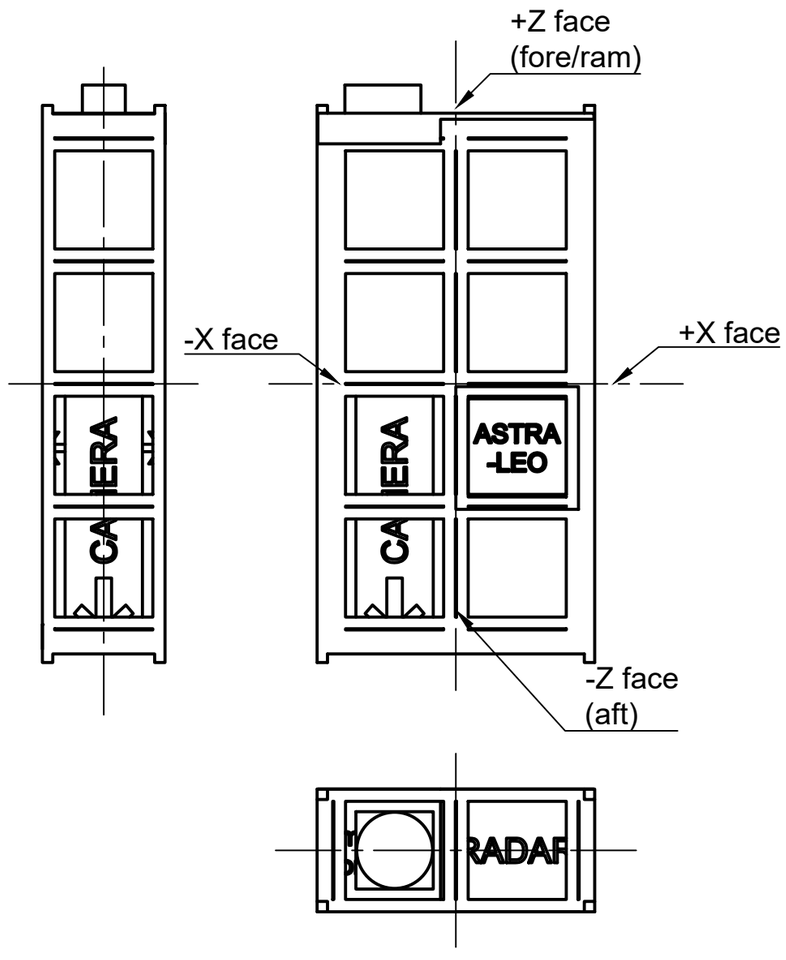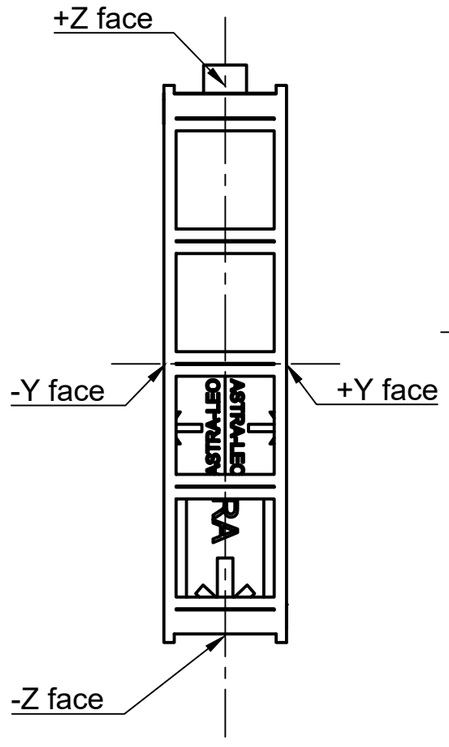
Tick marks placed at 100mm intervals to indicate 1U spacings