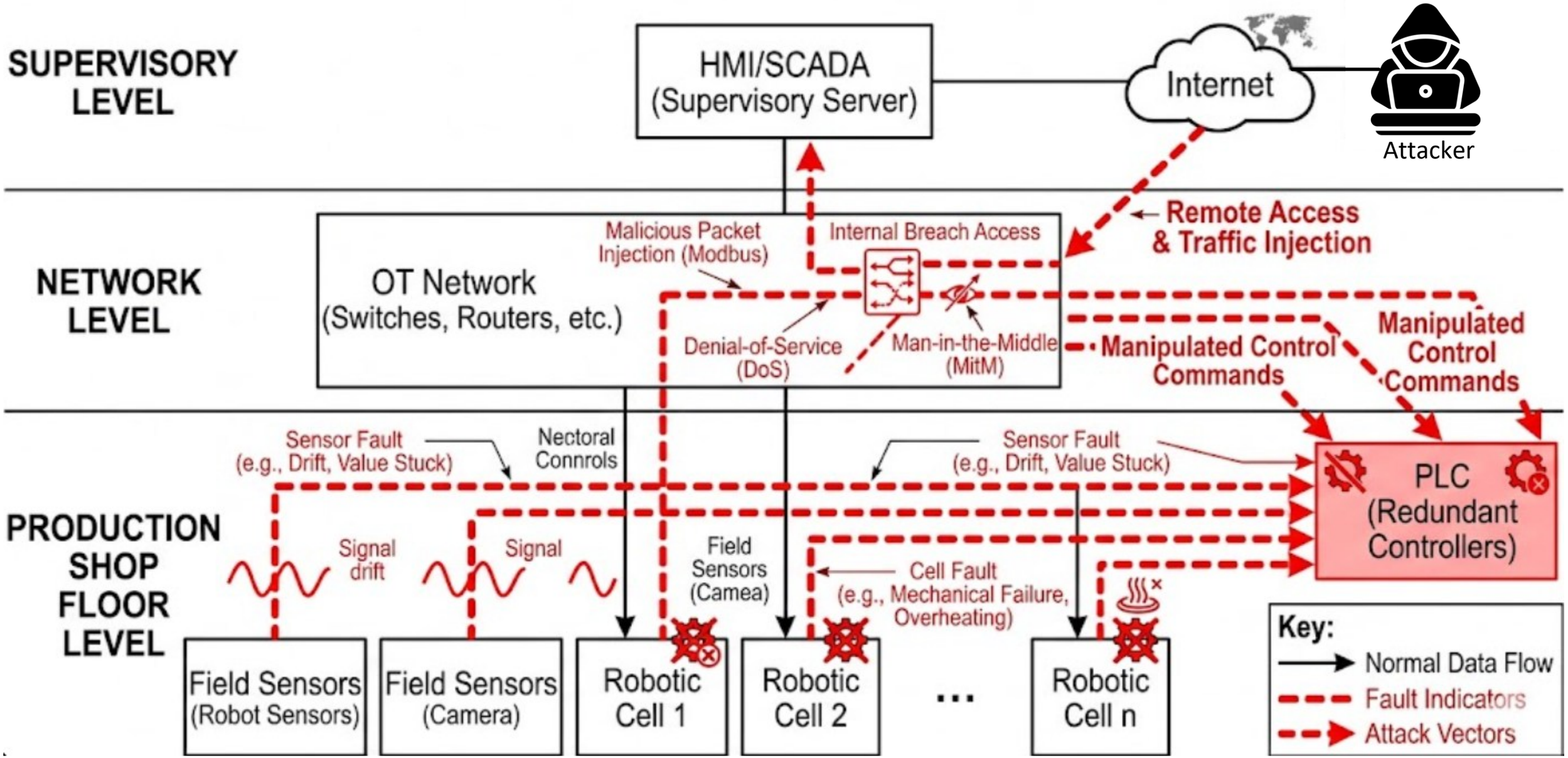
SUPERVISORY LEVEL
HMI/SCADA (Supervisory Server)
Internet
Attacker
NETWORK LEVEL
OT Network (Switches, Routers, etc.)
Malicious Packet Injection (Modbus)
Internal Breach Access
Remote Access & Traffic Injection
Denial-of-Service (DoS)
Man-in-the-Middle (MitM)
Manipulated Control Commands
Manipulated Control Commands
PRODUCTION SHOP FLOOR LEVEL
Sensor Fault (e.g., Drift, Value Stuck)
Nectoral Connrols
Sensor Fault (e.g., Drift, Value Stuck)
PLC (Redundant Controllers)
Signal drift
Signal
Field Sensors (Camea)
Cell Fault (e.g., Mechanical Failure, Overheating)
Field Sensors (Robot Sensors)
Field Sensors (Camera)
Robotic Cell 1
Robotic Cell 2
...
Robotic Cell n
Key:
Normal Data Flow
Fault Indicators
Attack Vectors