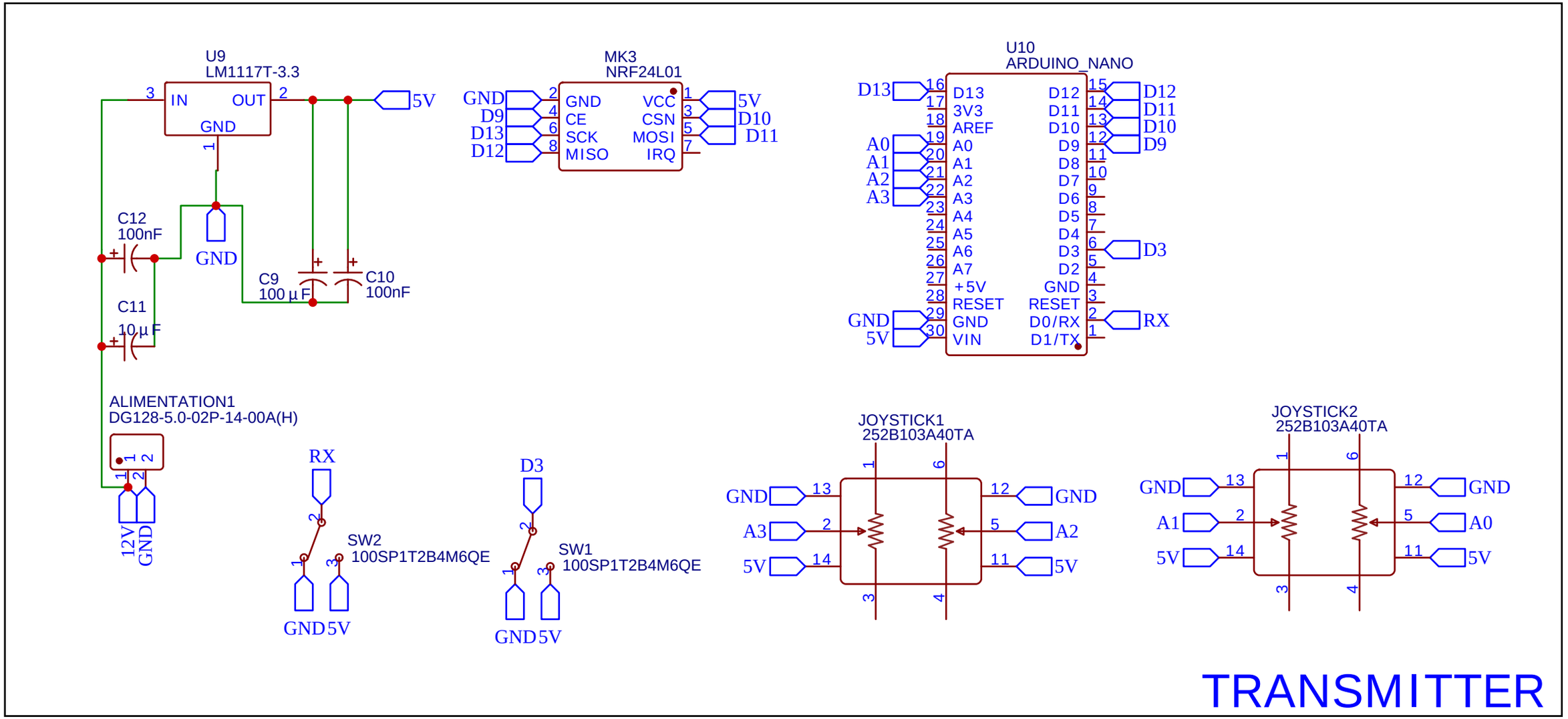

TITLE: Channel Radio Control Transmitter		REV: 1.0
EasyEDA	Company: INSAT	Sheet: 1/1
	Date: 2024-04-16 Drawn By: sami_bahlous	