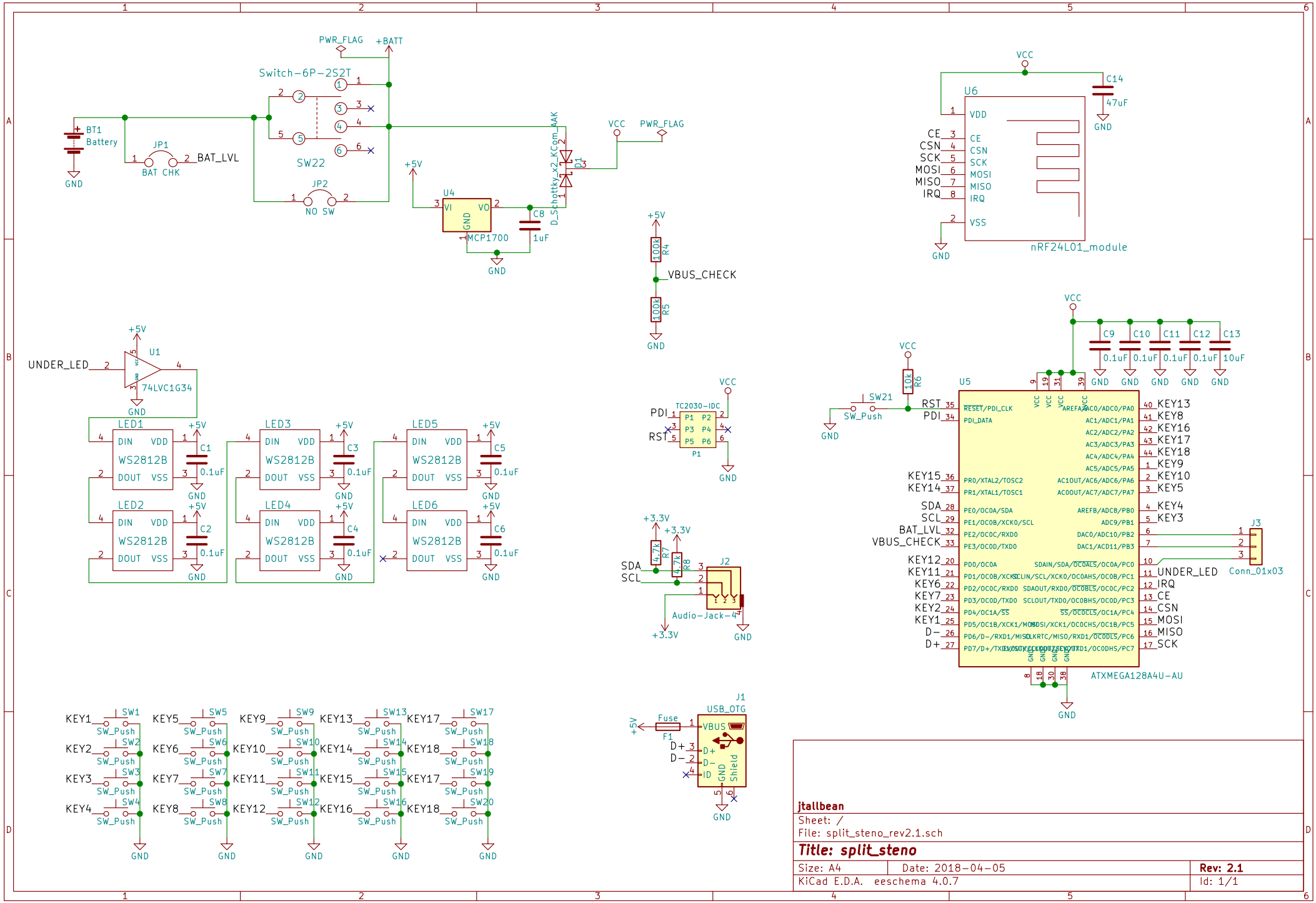

jtallbean

Sheet: /

File: split_steno_rev2.1.sch

Title: split_steno

Size: A4	Date: 2018-04-05	Rev: 2.1
KiCad E.D.A. eeschema 4.0.7		Id: 1/1