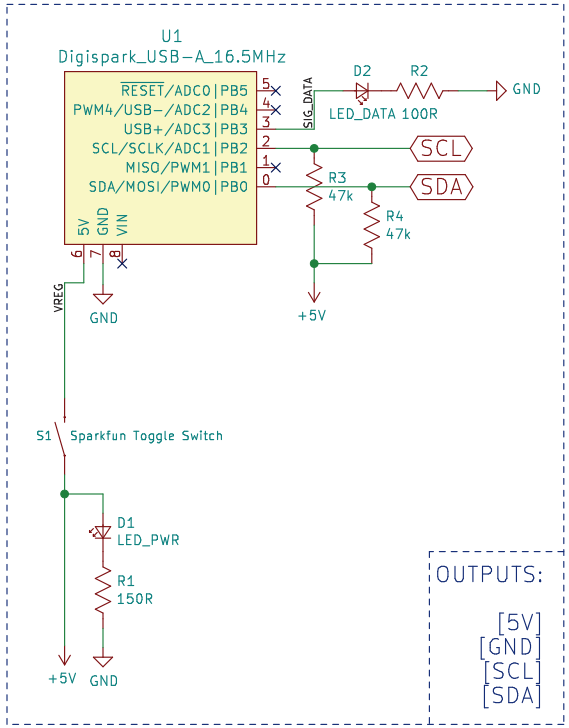

Control Unit

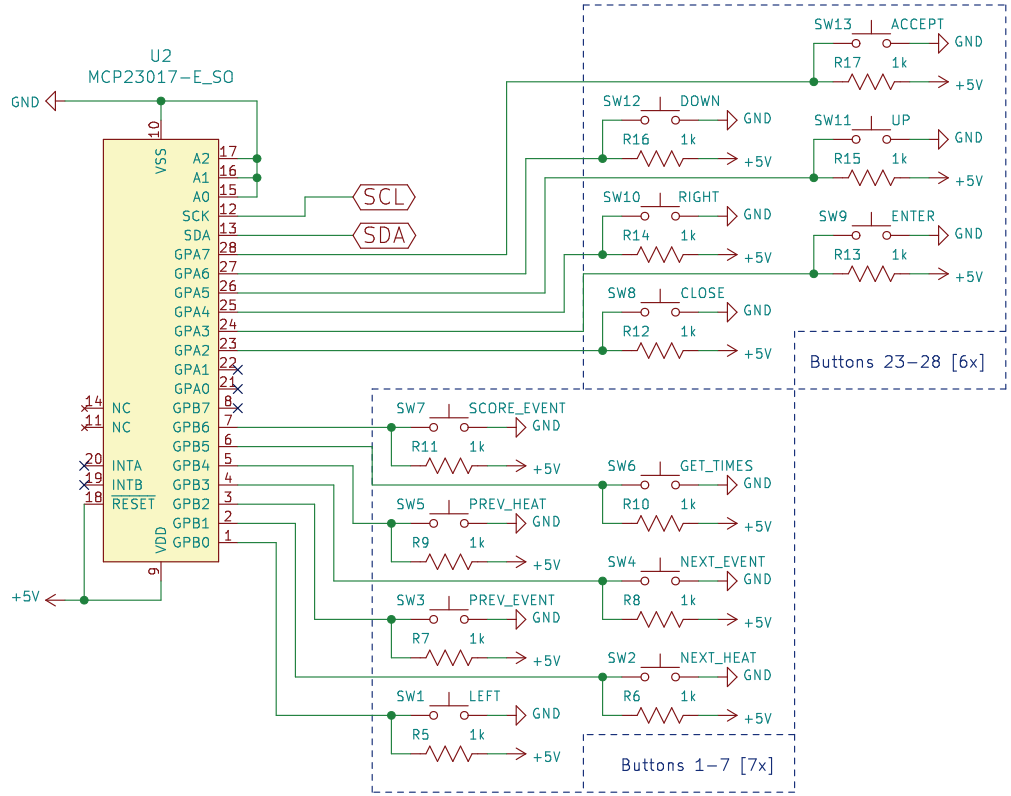

Keys Unit

Macro Keyboard
for HY-TEK Swim Meet Manager Software
Creative Commons Attribution 4.0 International License
https://github.com/sammdu/SwimMeet_Commander
Samm Du

SAMM DU.
sammdu.com

Sheet: /
File: SwimMeet_Controller_KiCAD.sch

Title: Swim Meet Commander

Size: USLetter	Date: 2019-12-31	**Rev: 2019-12-31**
KiCad E.D.A. kicad 5.1.5-52549c584ubuntu18.04.1		Id: 1/1