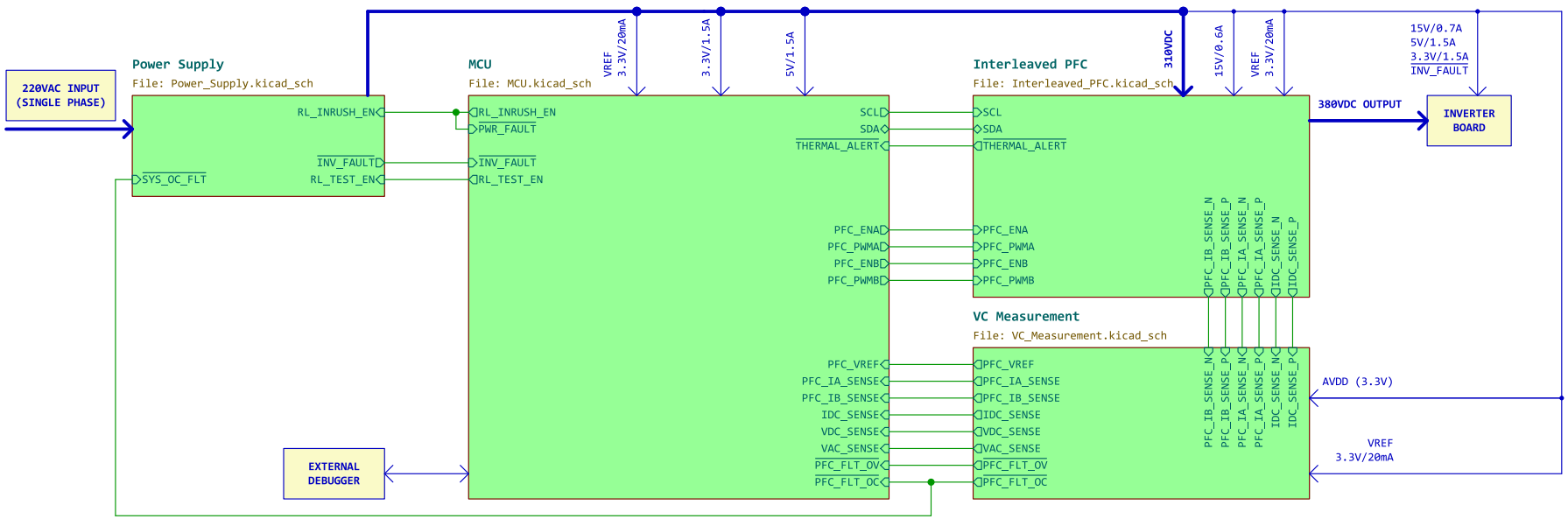

TON DUC THANG UNIVERSITY

Schematic Designed by ...
PCB Designed by ...
Approved by ...

Sheet: /
File: HW.ACIM-PSU.kicad_sch

Title: POWER SUPPLY UNIT

Size: A4	Date: 2023-10-14	**Rev: 0.0**
KiCad E.D.A. 8.0.2		Id: 1/5

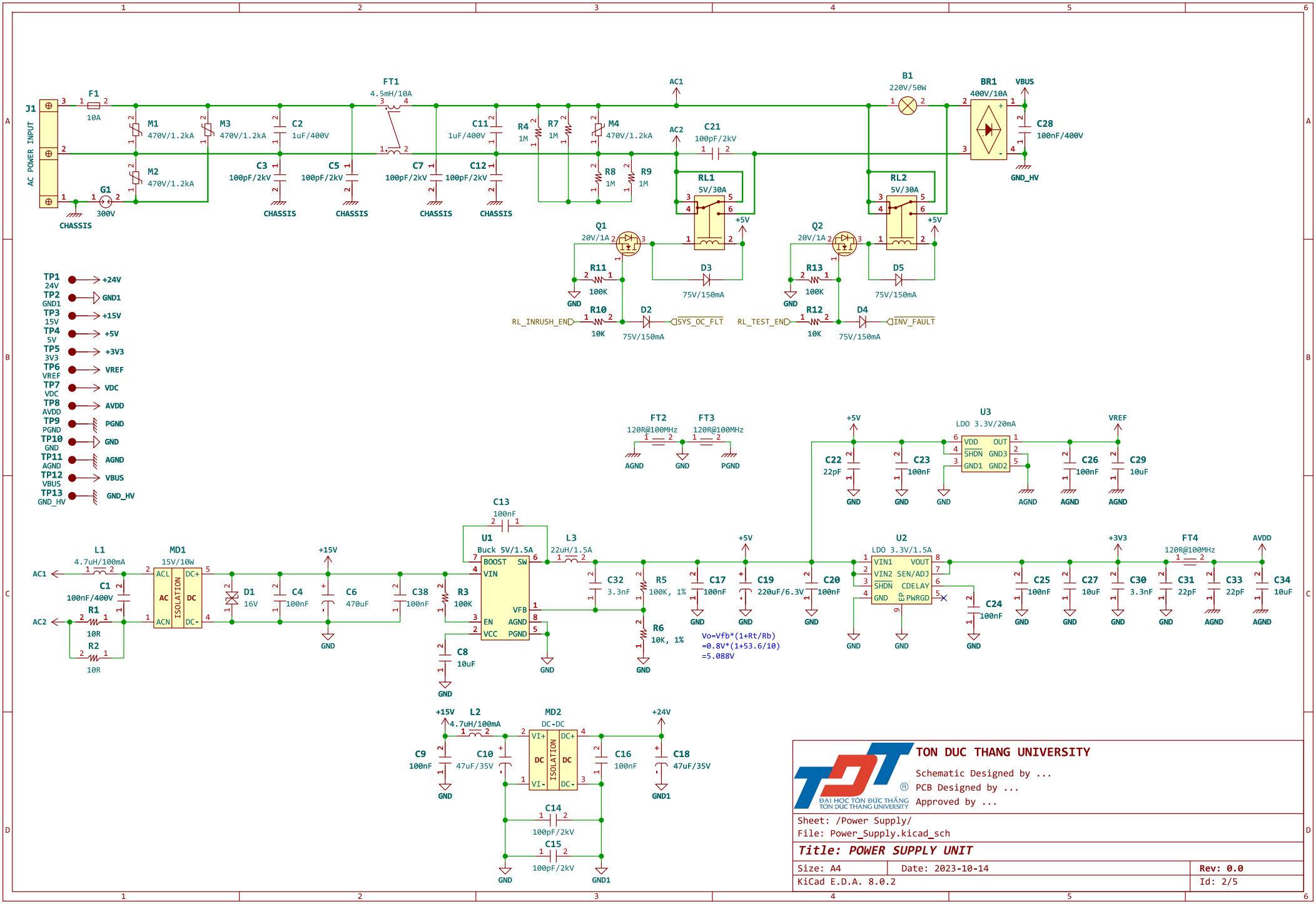

TON DUC THANG UNIVERSITY

Schematic Designed by ...
PCB Designed by ...
Approved by ...

Sheet: /Power Supply/
File: Power_Supply.kicad_sch

Title: POWER SUPPLY UNIT

Size: A4	Date: 2023-10-14	Rev: 0.0
KiCad E.D.A. 8.0.2		Id: 2/5

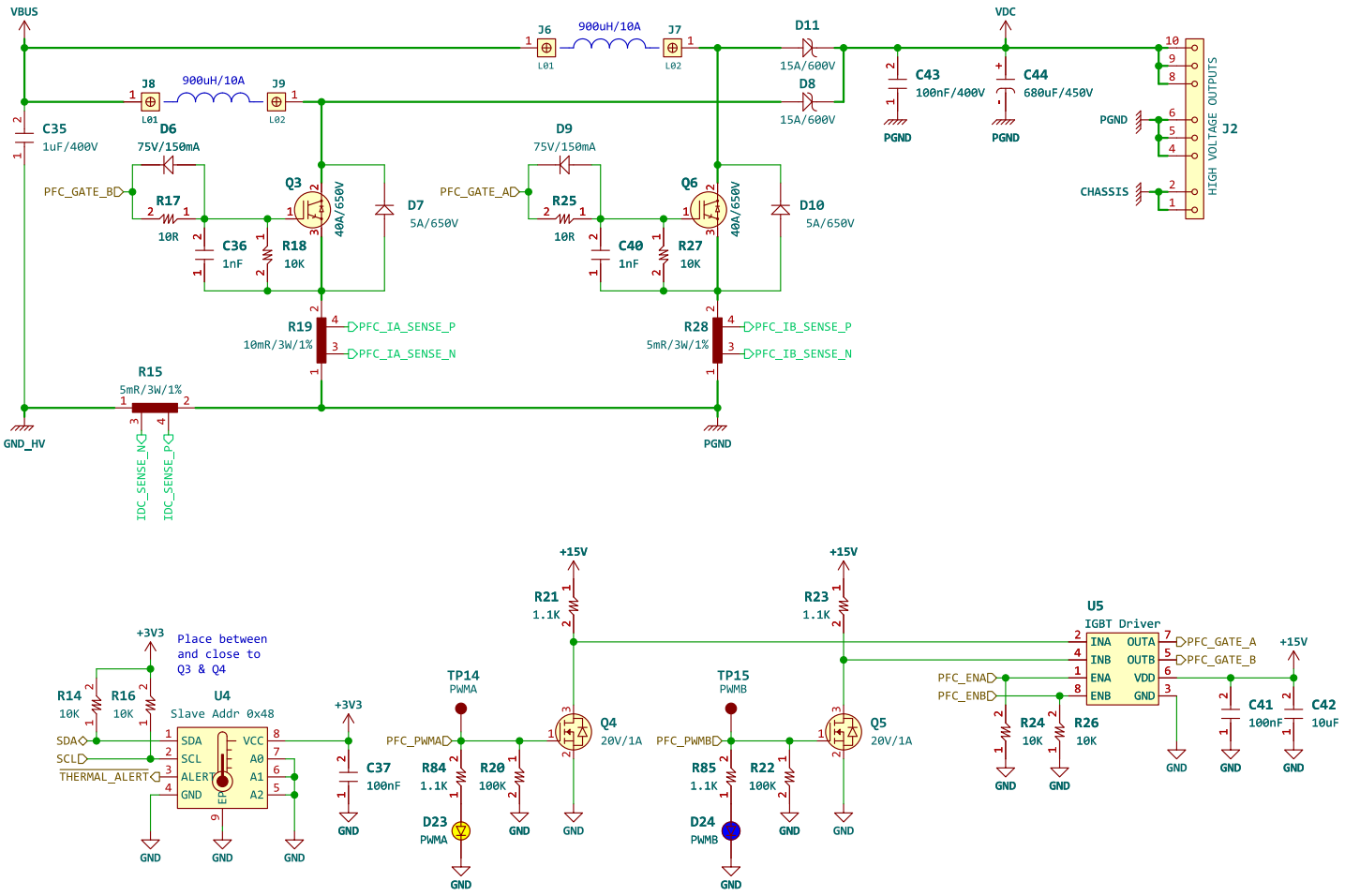

TON DUC THANG UNIVERSITY

Schematic Designed by ...
PCB Designed by ...
Approved by ...

Sheet: /Interleaved PFC/
File: Interleaved_PFC.kicad_sch

Title: POWER SUPPLY UNIT

Size: A4	Date: 2023-10-14	Rev: 0.0
KiCad E.D.A. 8.0.2		Id: 3/5

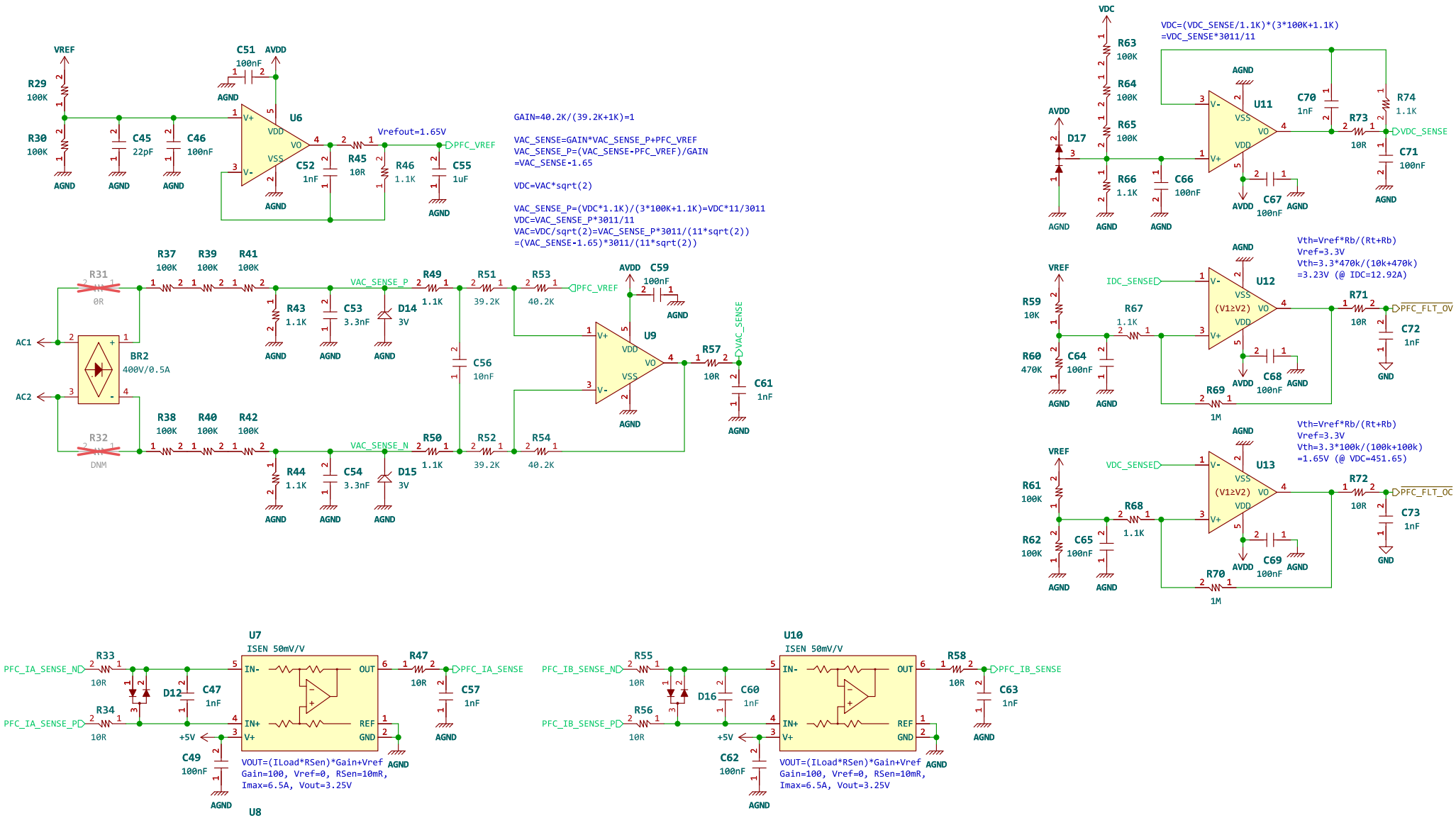

TON DUC THANG UNIVERSITY

Schematic Designed by ...
PCB Designed by ...
Approved by ...

Sheet: /VC Measurement/
File: VC_Measurement.kicad_sch

Title: POWER SUPPLY UNIT

Size: A4	Date: 2023-10-14	**Rev: 0.0**
KiCad E.D.A. 8.0.2		Id: 4/5

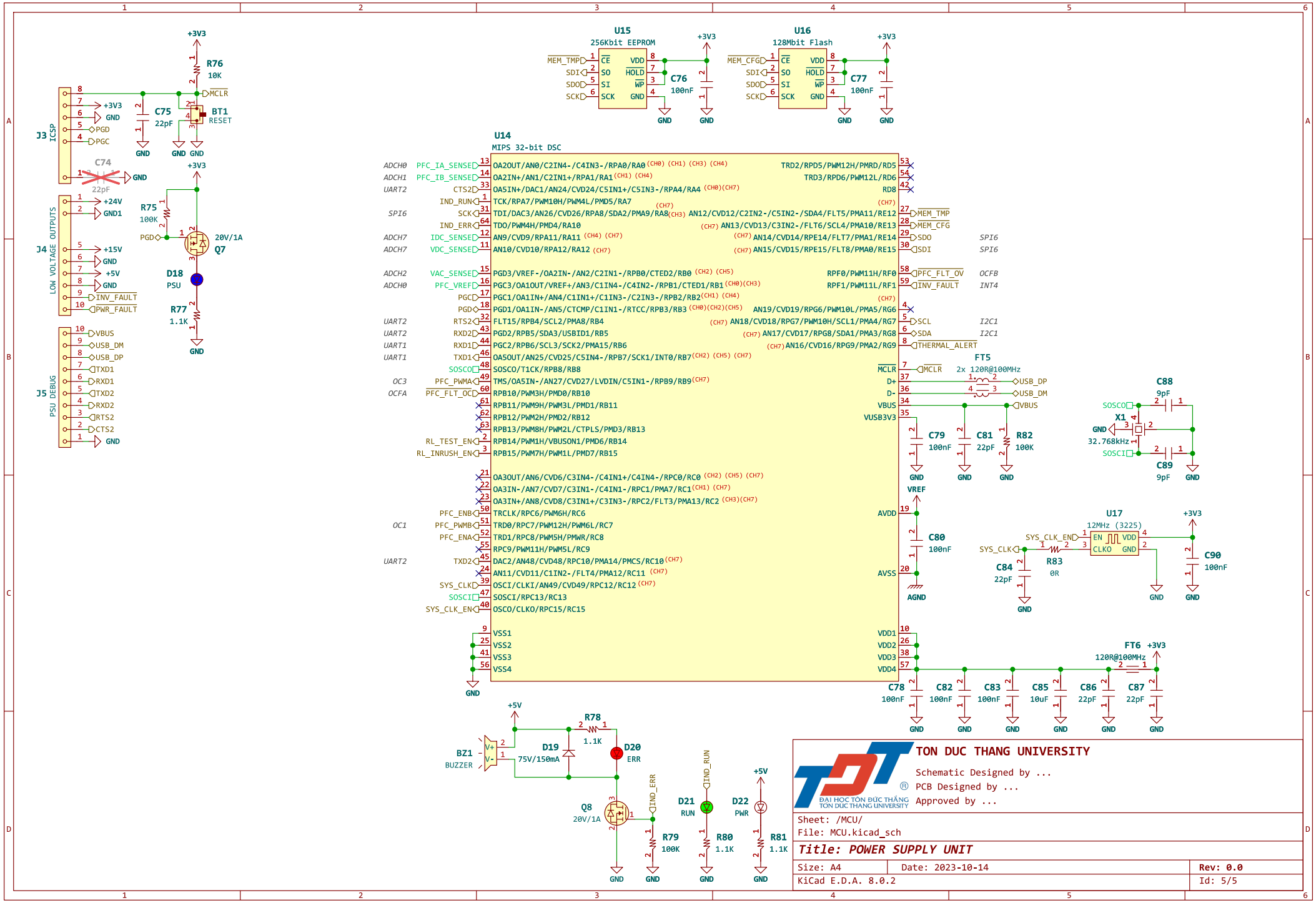
J3 ICSP
J4 LOW VOLTAGE OUTPUTS
J5 PSU DEBUG
R76 10K
C75 22pF
BT1 RESET
C74 22pF
R75 100K
Q7 20V/1A
D18 PSU
R77 1.1K
U15 256Kbit EEPROM
C76 100nF
U16 128Mbit Flash
C77 100nF
U14 MIPS 32-bit DSC
FT5 2x 120R@100MHz
C88 9pF
X1 32.768kHz
C89 9pF
U17 12MHz (3225)
R83 0R
C84 22pF
C90 100nF
FT6 120R@100MHz
C78 100nF
C82 100nF
C83 100nF
C85 10uF
C86 22pF
C87 22pF
C79 100nF
C81 22pF
R82 100K
C80 100nF
BZ1 BUZZER
R78 1.1K
D19 75V/150mA
D20 ERR
Q8 20V/1A
R79 100K
D21 RUN
R80 1.1K
D22 PWR
R81 1.1K
TON DUC THANG UNIVERSITY
Schematic Designed by ...
PCB Designed by ...
Approved by ...
Sheet: /MCU/
File: MCU.kicad_sch
Title: POWER SUPPLY UNIT
Size: A4
Date: 2023-10-14
Rev: 0.0
KiCad E.D.A. 8.0.2
Id: 5/5