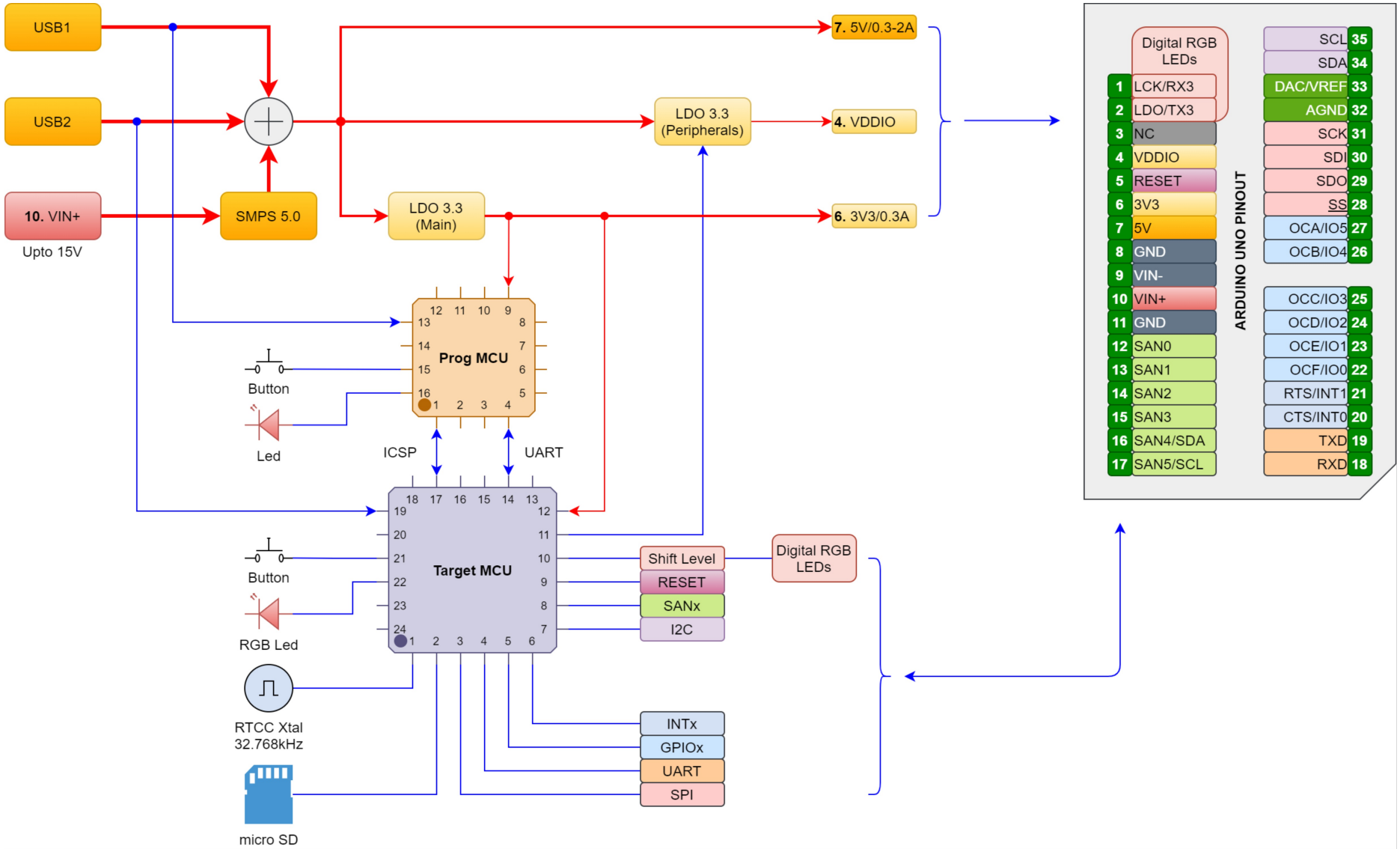

DESIGN TITLE: SAMM-Mx6-SD

Block Diagram

BY: SAMPI Dev Kit

REV: 1.0

DATE: Sun, 1.8.2021

PAGE: 1 of 4

TIME: 23:19:57

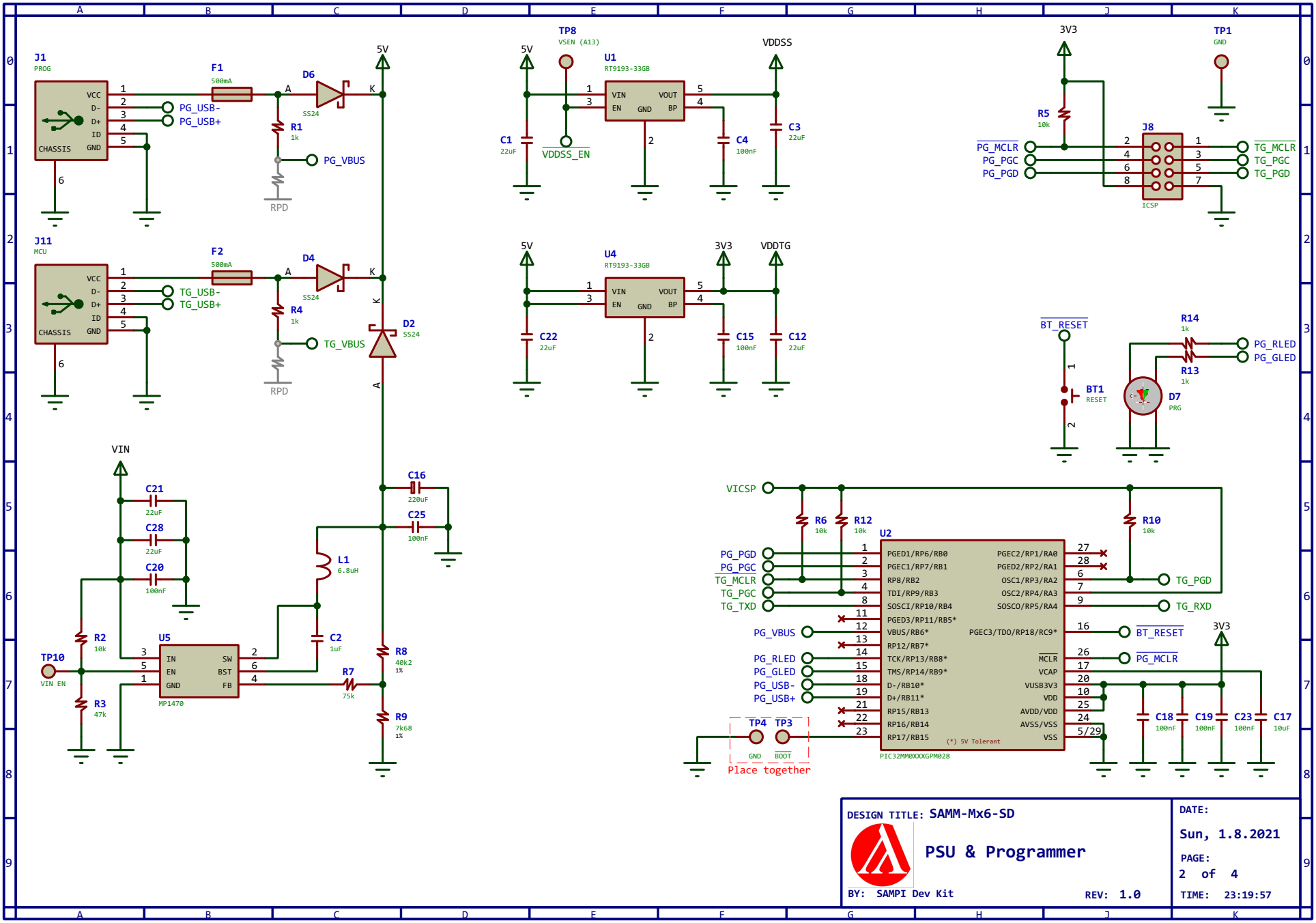
J1
PROG
VCC
D-
D+
ID
GND
CHASSIS
F1
500mA
D6
SS24
5V
PG_USB-
PG_USB+
R1
1k
PG_VBUS
RPD
J11
MCU
F2
500mA
D4
SS24
TG_USB-
TG_USB+
R4
1k
TG_VBUS
D2
SS24
TP8
VSEN (A13)
U1
RT9193-33GB
VIN
EN
GND
VOUT
BP
VDDSS
C1
22uF
VDDSS_EN
C4
100nF
C3
22uF
U4
RT9193-33GB
3V3
VDDTG
C22
22uF
C15
100nF
C12
22uF
3V3
TP1
GND
R5
10k
J8
ICSP
PG_MCLR
PG_PGC
PG_PGD
TG_MCLR
TG_PGC
TG_PGD
BT_RESET
BT1
RESET
R14
1k
R13
1k
D7
PRG
PG_RLED
PG_GLED
VIN
C21
22uF
C28
22uF
C20
100nF
C16
220uF
C25
100nF
L1
6.8uH
C2
1uF
R2
10k
R3
47k
TP10
VIN EN
U5
MP1470
IN
EN
GND
SW
BST
FB
R7
75k
R8
40k2
1%
R9
7k68
1%
VICSP
R6
10k
R12
10k
R10
10k
U2
PIC32MM0XXXGPM028
PGED1/RP6/RB0
PGEC1/RP7/RB1
RP8/RB2
TDI/RP9/RB3
SOSCI/RP10/RB4
PGED3/RP11/RB5*
VBUS/RB6*
RP12/RB7*
TCK/RP13/RB8*
TMS/RP14/RB9*
D-/RB10*
D+/RB11*
RP15/RB13
RP16/RB14
RP17/RB15
PGEC2/RP1/RA0
PGED2/RP2/RA1
OSC1/RP3/RA2
OSC2/RP4/RA3
SOSCO/RP5/RA4
PGEC3/TDO/RP18/RC9*
MCLR
VCAP
VUSB3V3
VDD
AVDD/VDD
AVSS/VSS
VSS
(*) 5V Tolerant
TG_TXD
TG_RXD
TP4
TP3
GND
BOOT
Place together
C18
100nF
C19
100nF
C23
100nF
C17
10uF
DESIGN TITLE: SAMM-Mx6-SD
PSU & Programmer
BY: SAMPI Dev Kit
REV: 1.0
DATE:
Sun, 1.8.2021
PAGE:
2 of 4
TIME: 23:19:57

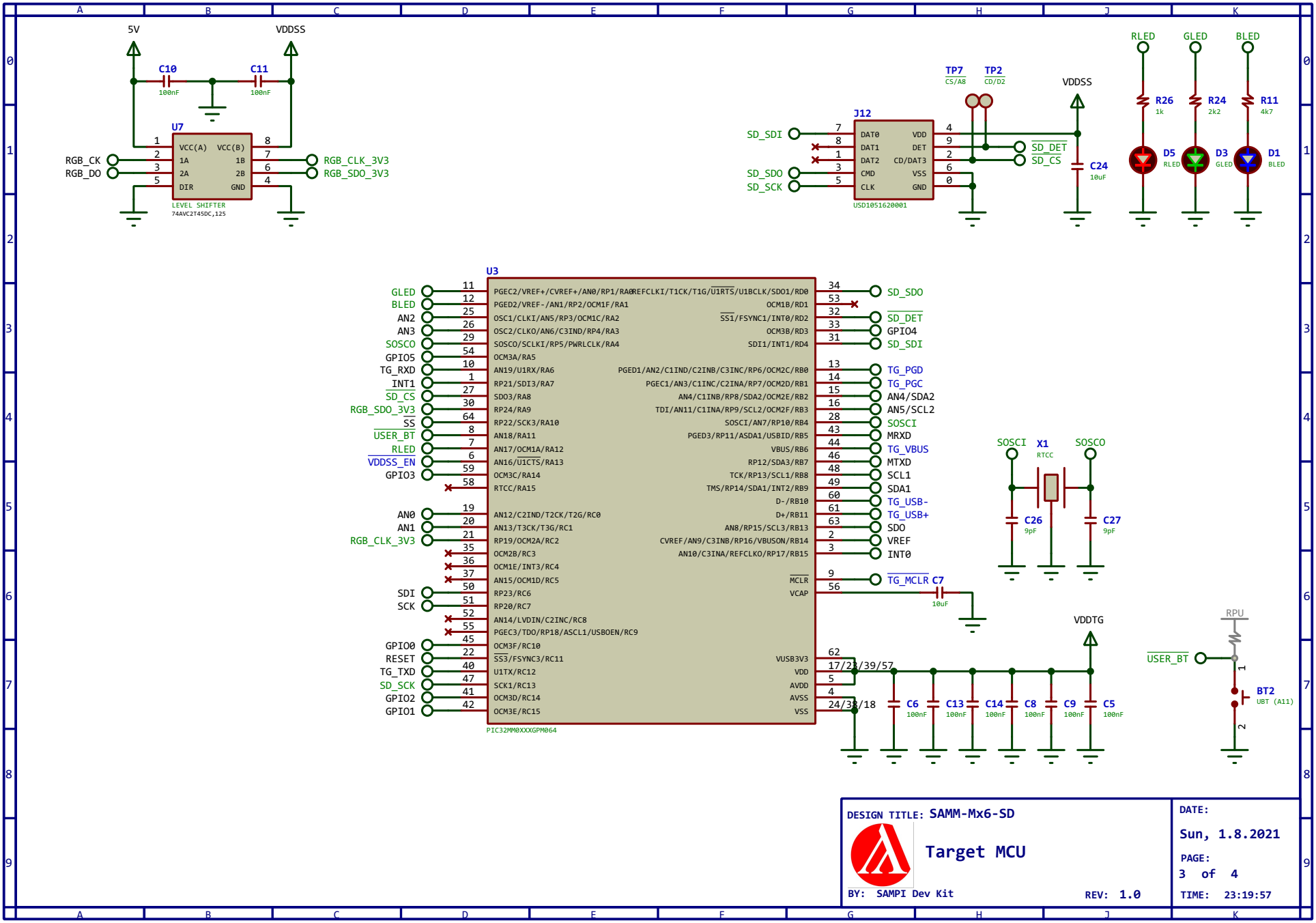

DESIGN TITLE: SAMM-Mx6-SD

Target MCU

BY: SAMPI Dev Kit

REV: 1.0

DATE: Sun, 1.8.2021

PAGE: 3 of 4

TIME: 23:19:57

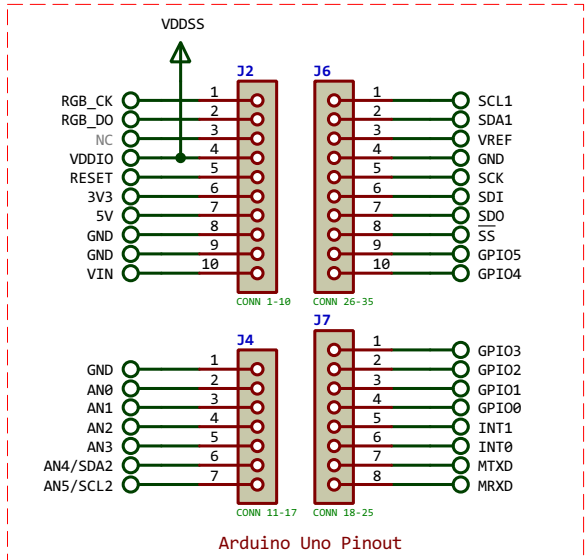

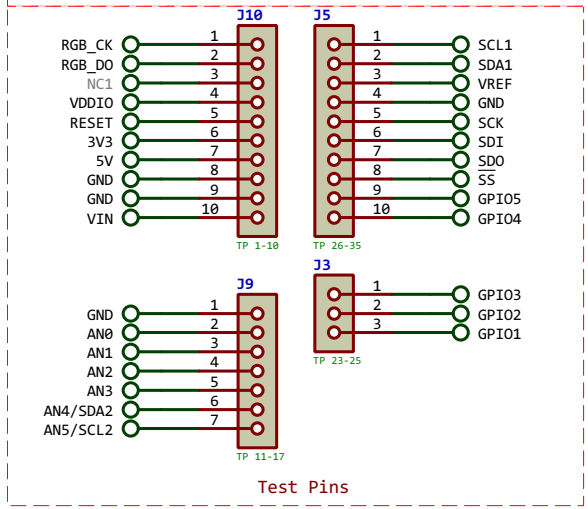

DESIGN TITLE: SAMM-Mx6-SD

Peripherals & Terminal

BY: SAMPI Dev Kit

REV: 1.0

DATE: Sun, 1.8.2021

PAGE: 4 of 4

TIME: 23:19:57