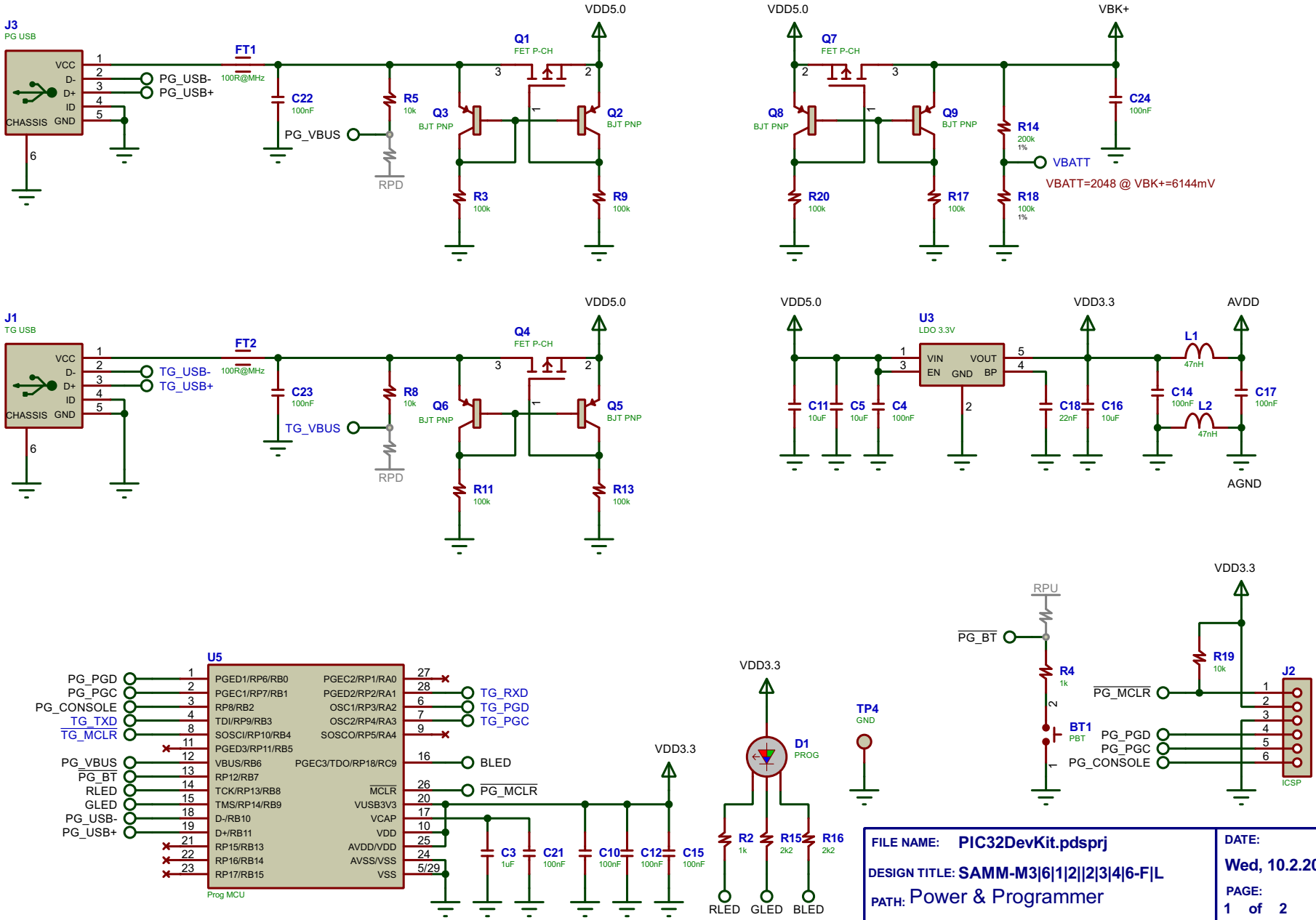

FILE NAME: PIC32DevKit.pdsprj	DATE: Wed, 10.2.2021
DESIGN TITLE: SAMM-M3|6|1|2||2|3|4|6-F|L	PAGE: 1 of 2
PATH: Power & Programmer	TIME: 22:42:33
BY: SAMPI Dev Kit	REV: 1.0

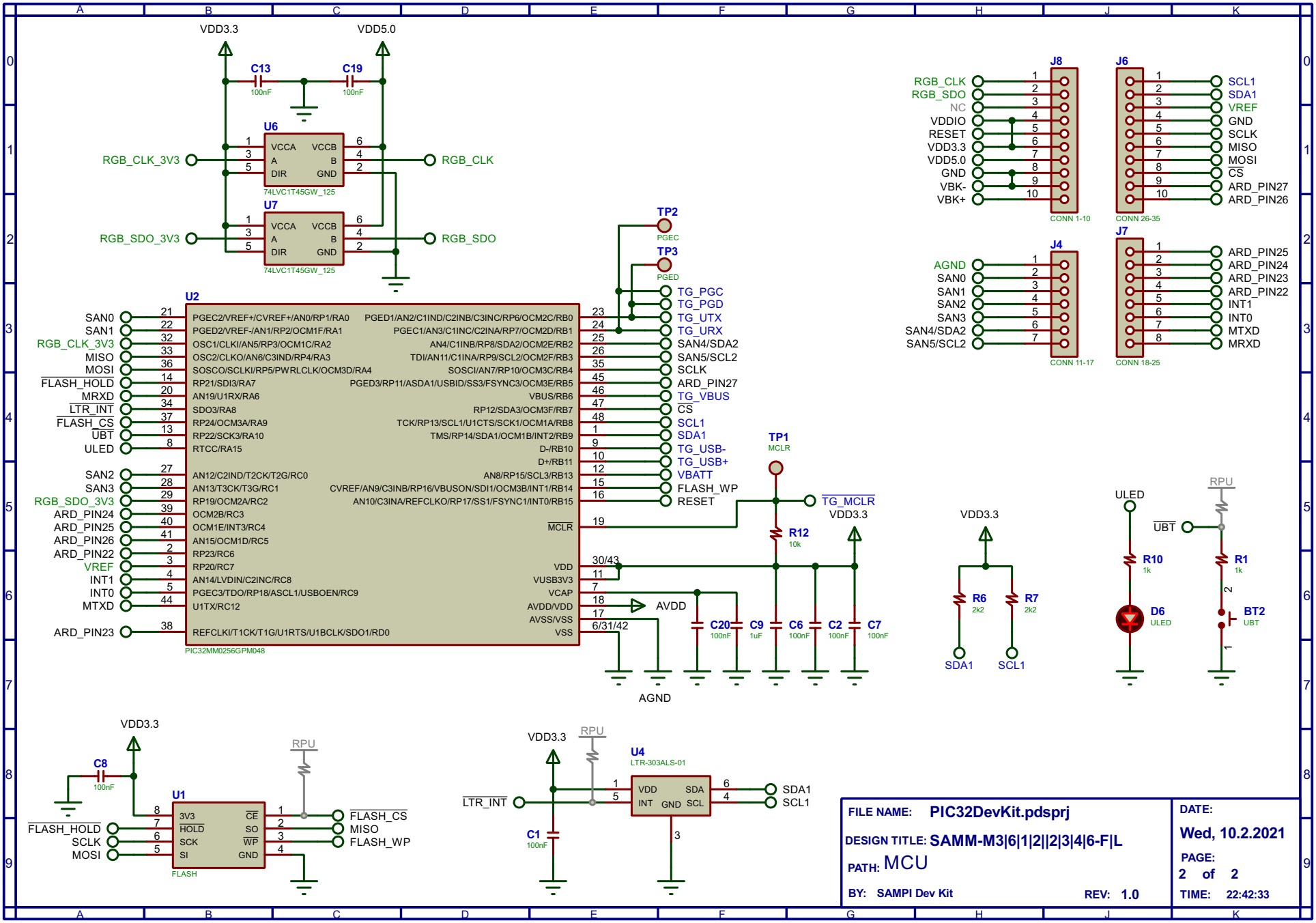
VDD3.3
VDD5.0
C13
100nF
C19
100nF
U6
74LVC1T45GW_125
RGB_CLK_3V3
RGB_CLK
U7
74LVC1T45GW_125
RGB_SDO_3V3
RGB_SDO
J8
CONN 1-10
J6
CONN 26-35
J4
CONN 11-17
J7
CONN 18-25
U2
PIC32MM0256GPM048
TP2
PGEC
TP3
PGED
TP1
MCLR
TG_MCLR
R12
10k
AVDD
AGND
C20
100nF
C9
1uF
C6
100nF
C2
100nF
C7
100nF
R6
2k2
R7
2k2
SDA1
SCL1
ULED
UBT
R10
1k
R1
1k
D6
ULED
BT2
UBT
RPU
C8
100nF
U1
FLASH
FLASH_CS
MISO
FLASH_WP
U4
LTR-303ALS-01
LTR_INT
C1
100nF
FILE NAME: PIC32DevKit.pdsprj
DESIGN TITLE: SAMM-M3|6|1|2||2|3|4|6-F|L
PATH: MCU
BY: SAMPI Dev Kit
REV: 1.0
DATE:
Wed, 10.2.2021
PAGE:
2 of 2
TIME: 22:42:33