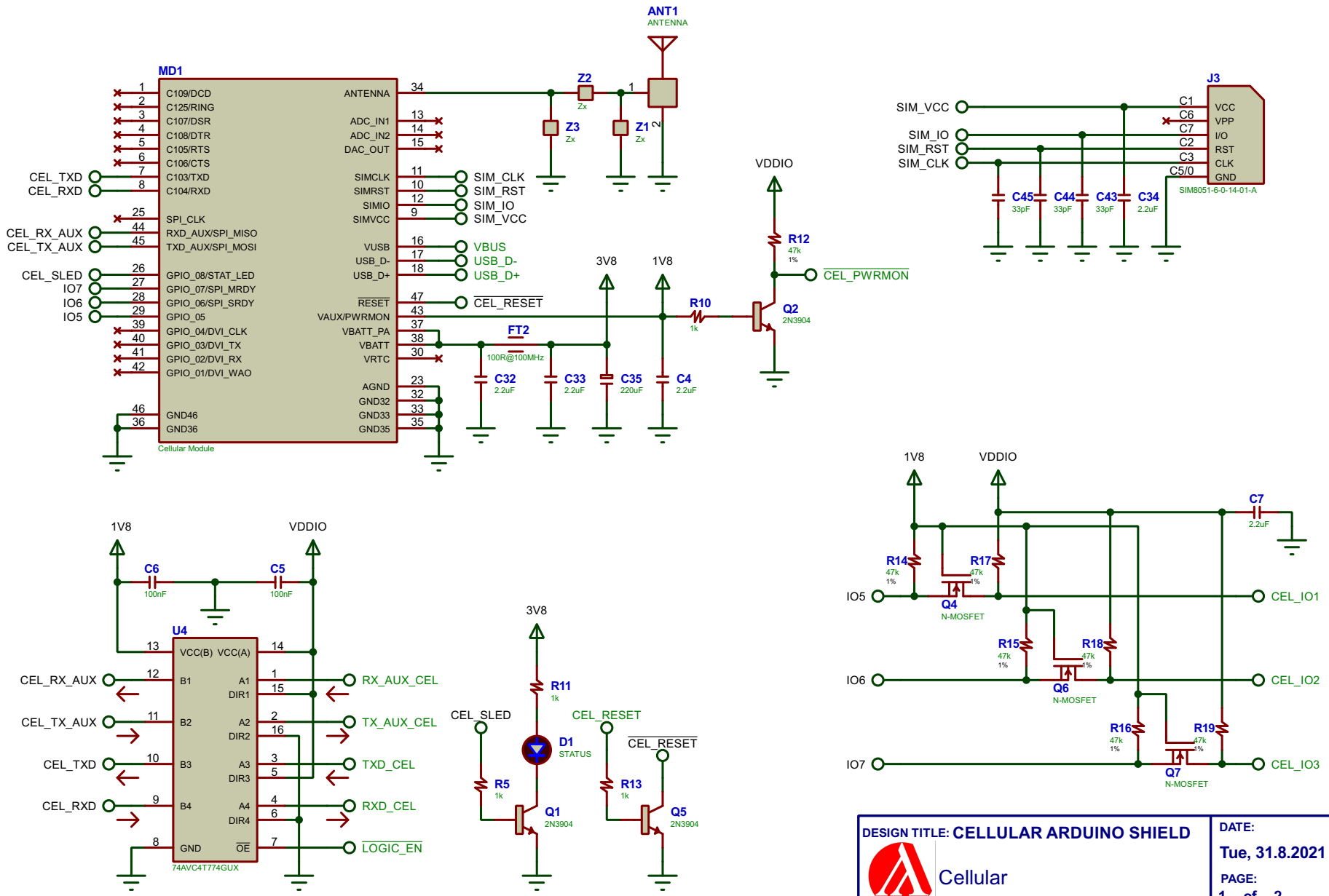
MD1
Cellular Module
C109/DCD
C125/RING
C107/DSR
C108/DTR
C105/RTS
C106/CTS
C103/TXD
C104/RXD
SPI_CLK
RXD_AUX/SPI_MISO
TXD_AUX/SPI_MOSI
GPIO_08/STAT_LED
GPIO_07/SPI_MRDY
GPIO_06/SPI_SRDY
GPIO_05
GPIO_04/DVI_CLK
GPIO_03/DVI_TX
GPIO_02/DVI_RX
GPIO_01/DVI_WAO
GND46
GND36
ANTENNA
ADC_IN1
ADC_IN2
DAC_OUT
SIMCLK
SIMRST
SIMIO
SIMVCC
VUSB
USB_D-
USB_D+
RESET
VAUX/PWRMON
VBATT_PA
VBATT
VRTC
AGND
GND32
GND33
GND35
CEL_TXD
CEL_RXD
CEL_RX_AUX
CEL_TX_AUX
CEL_SLED
IO7
IO6
IO5
SIM_CLK
SIM_RST
SIM_IO
SIM_VCC
VBUS
USB_D-
USB_D+
CEL_RESET
ANT1
ANTENNA
Z2
Zx
Z3
Zx
Z1
Zx
FT2
100R@100MHz
C32
2.2uF
C33
2.2uF
C35
220uF
C4
2.2uF
3V8
1V8
VDDIO
R10
1k
R12
47k
1%
Q2
2N3904
CEL_PWRMON
J3
SIM8051-6-0-14-01-A
VCC
VPP
I/O
RST
CLK
GND
C1
C6
C7
C2
C3
C5/0
C45
33pF
C44
33pF
C43
33pF
C34
2.2uF
C6
100nF
C5
100nF
U4
74AVC4T774GUX
VCC(B)
VCC(A)
B1
B2
B3
B4
A1
A2
A3
A4
DIR1
DIR2
DIR3
DIR4
GND
OE
RX_AUX_CEL
TX_AUX_CEL
TXD_CEL
RXD_CEL
LOGIC_EN
R11
1k
D1
STATUS
R5
1k
Q1
2N3904
R13
1k
Q5
2N3904
C7
2.2uF
R14
47k
1%
R17
47k
1%
Q4
N-MOSFET
R15
47k
1%
R18
47k
1%
Q6
N-MOSFET
R16
47k
1%
R19
47k
1%
Q7
N-MOSFET
CEL_IO1
CEL_IO2
CEL_IO3
DESIGN TITLE: CELLULAR ARDUINO SHIELD
Cellular
BY: SAMPI Dev Kit
REV: 1.0
DATE:
Tue, 31.8.2021
PAGE:
1 of 2
TIME: 22:55:59

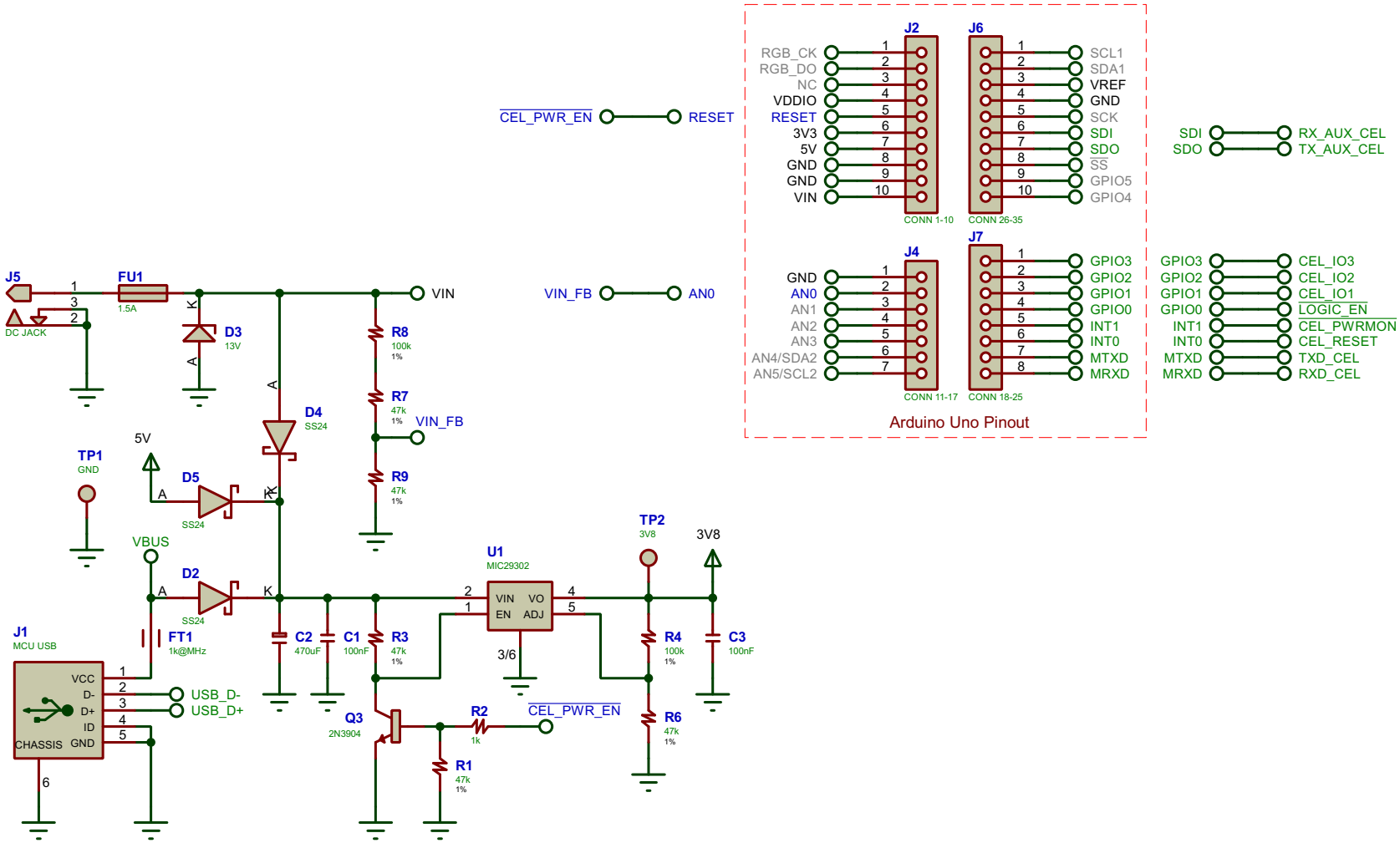

DESIGN TITLE: **CELLULAR ARDUINO SHIELD**

Terminal

BY: SAMPI Dev Kit

REV: 1.0

DATE: Tue, 31.8.2021

PAGE: 2 of 2

TIME: 22:55:59