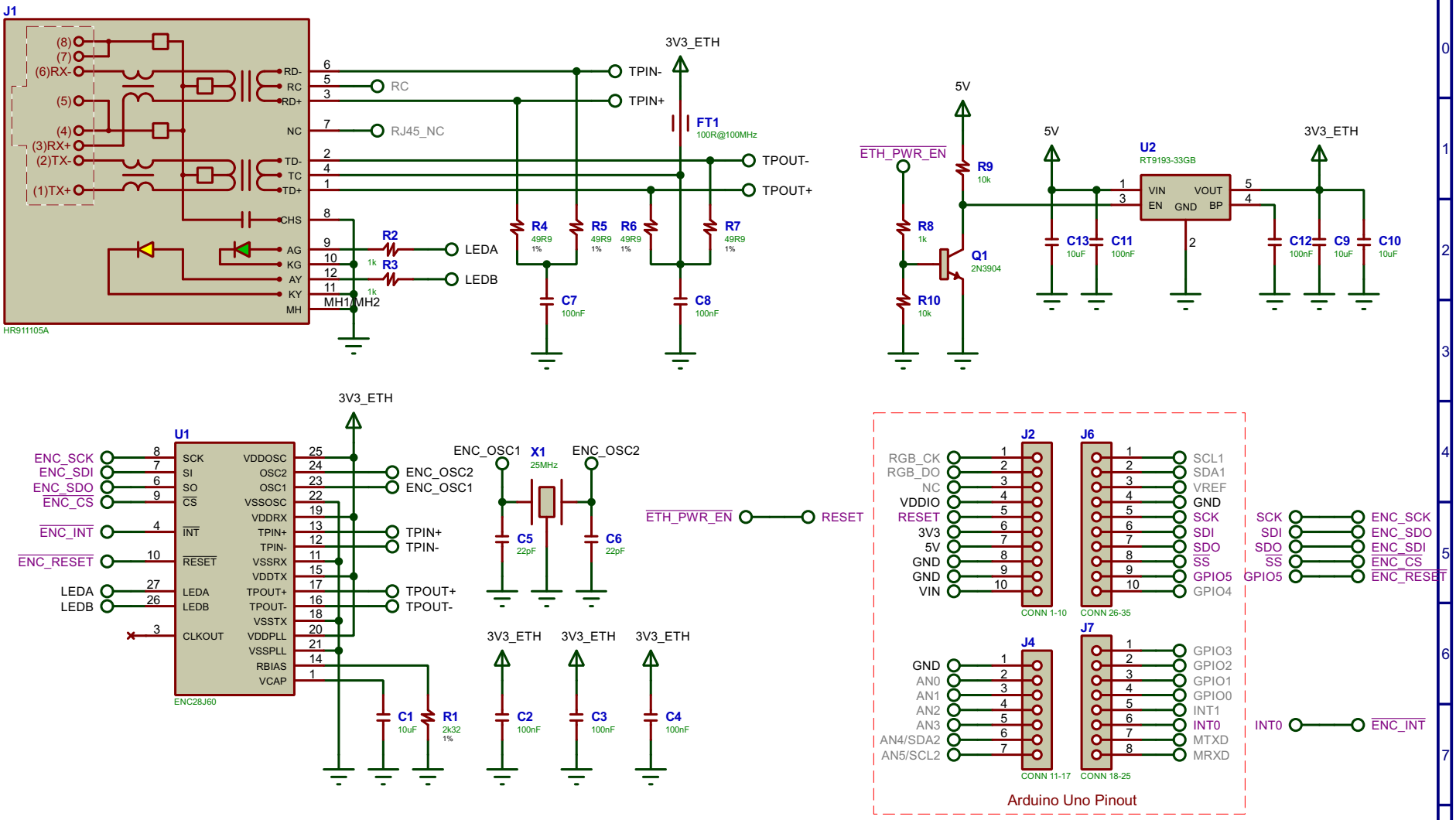

DESIGN TITLE: **ETHERNET ARDUINO SHIELD**

Terminal

BY: SAMPI Dev Kit

REV: 1.0

DATE: Thu, 2.9.2021

PAGE: 1 of 1

TIME: 23:08:56