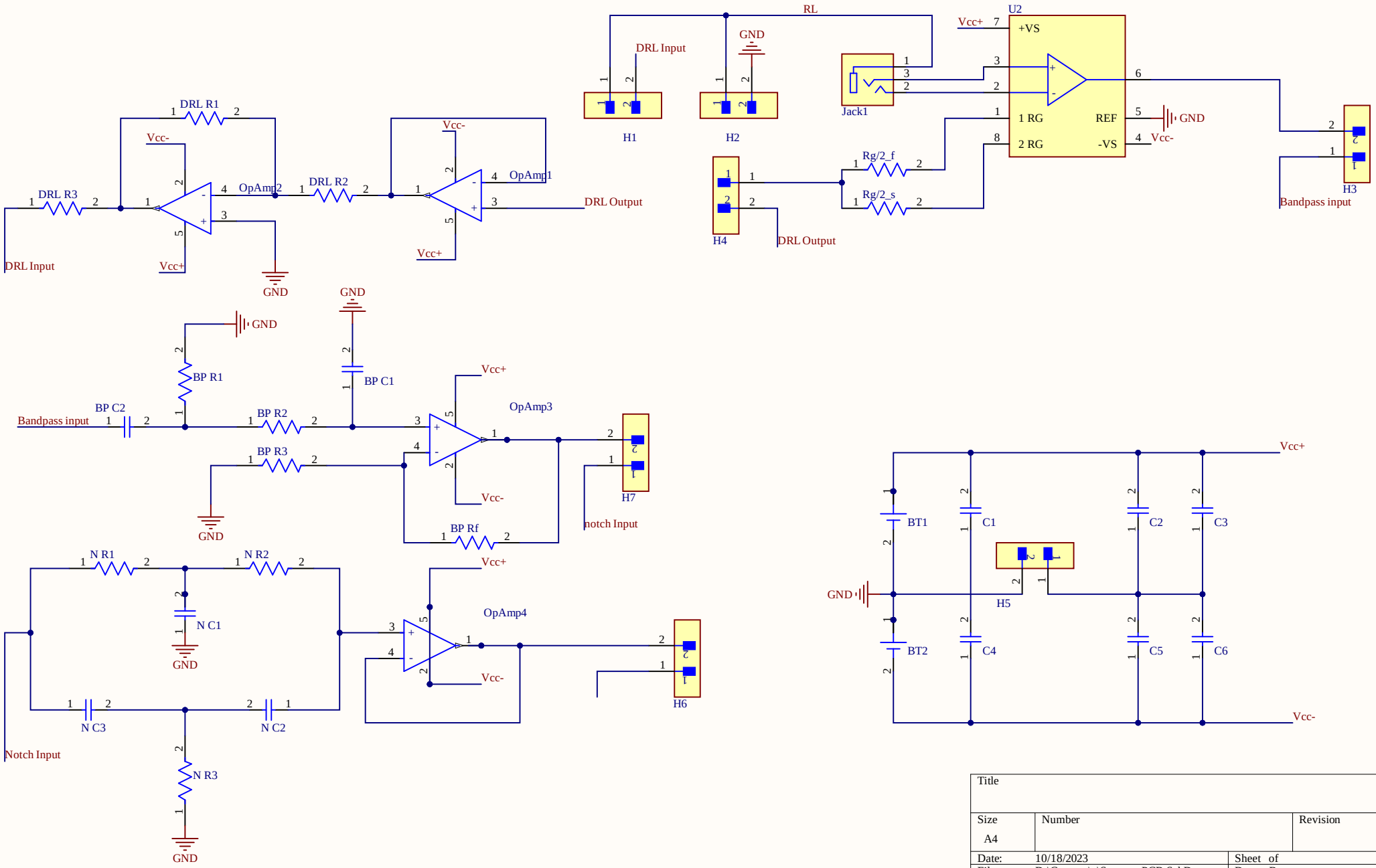

Title		
Size A4	Number	Revision
Date: 10/18/2023		Sheet of
File: D:\Courses\..\Samroz_PCB.SchDoc		Drawn By:

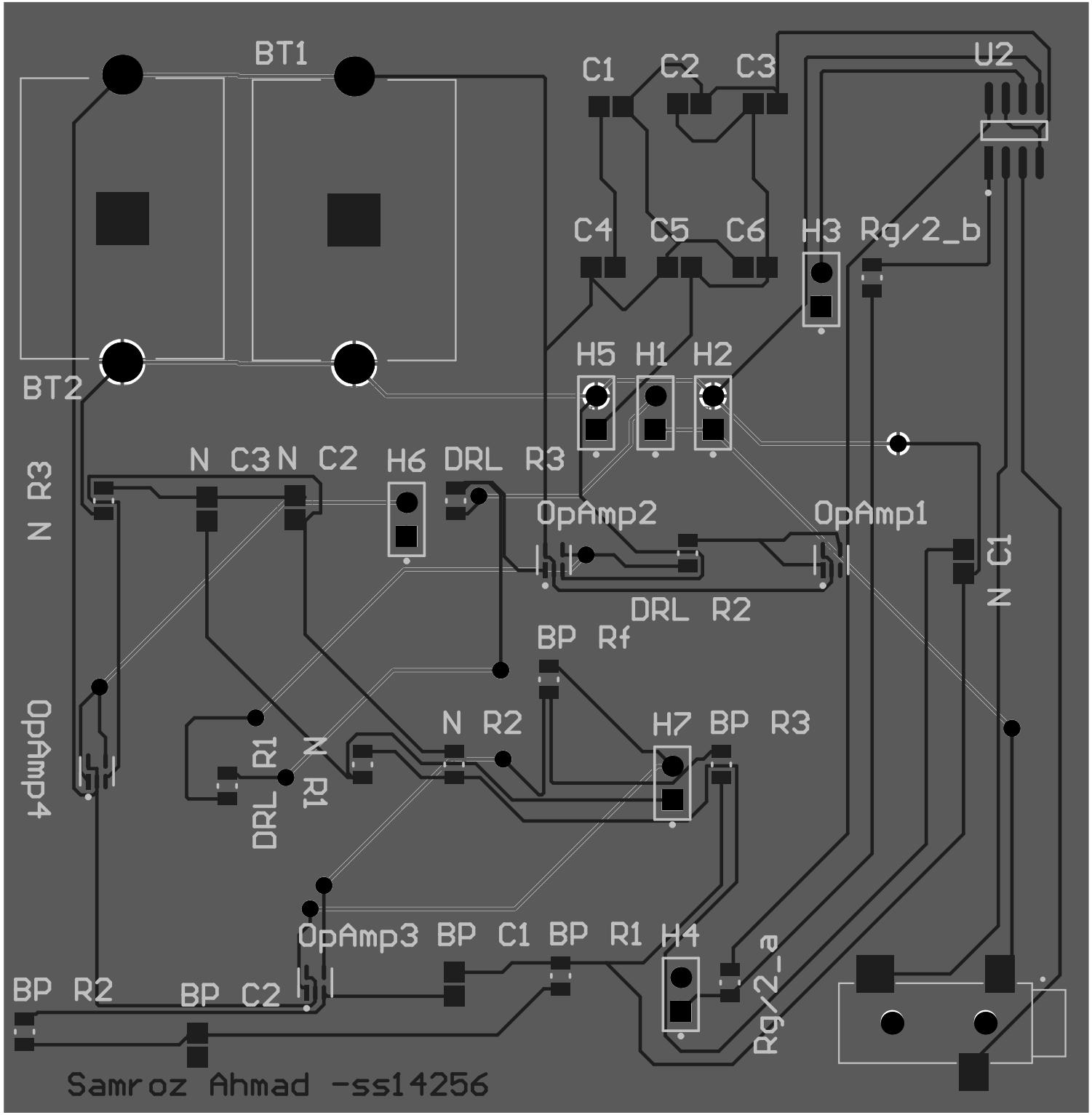
BT1
BT2
C1
C2
C3
C4
C5
C6
U2
H3
Rg/2_b
H5
H1
H2
N
C3
N
C2
H6
DRL
R3
N
R3
OpAmp2
OpAmp1
N
C1
DRL
R2
BP
Rf
OpAmp4
N
R2
H7
BP
R3
R1
N
R1
DRL
OpAmp3
BP
C1
BP
R1
H4
Rg/2_a
BP
R2
BP
C2
Samroz Ahmad -ss14256

Board Stack Report