INITIAL IDEATION

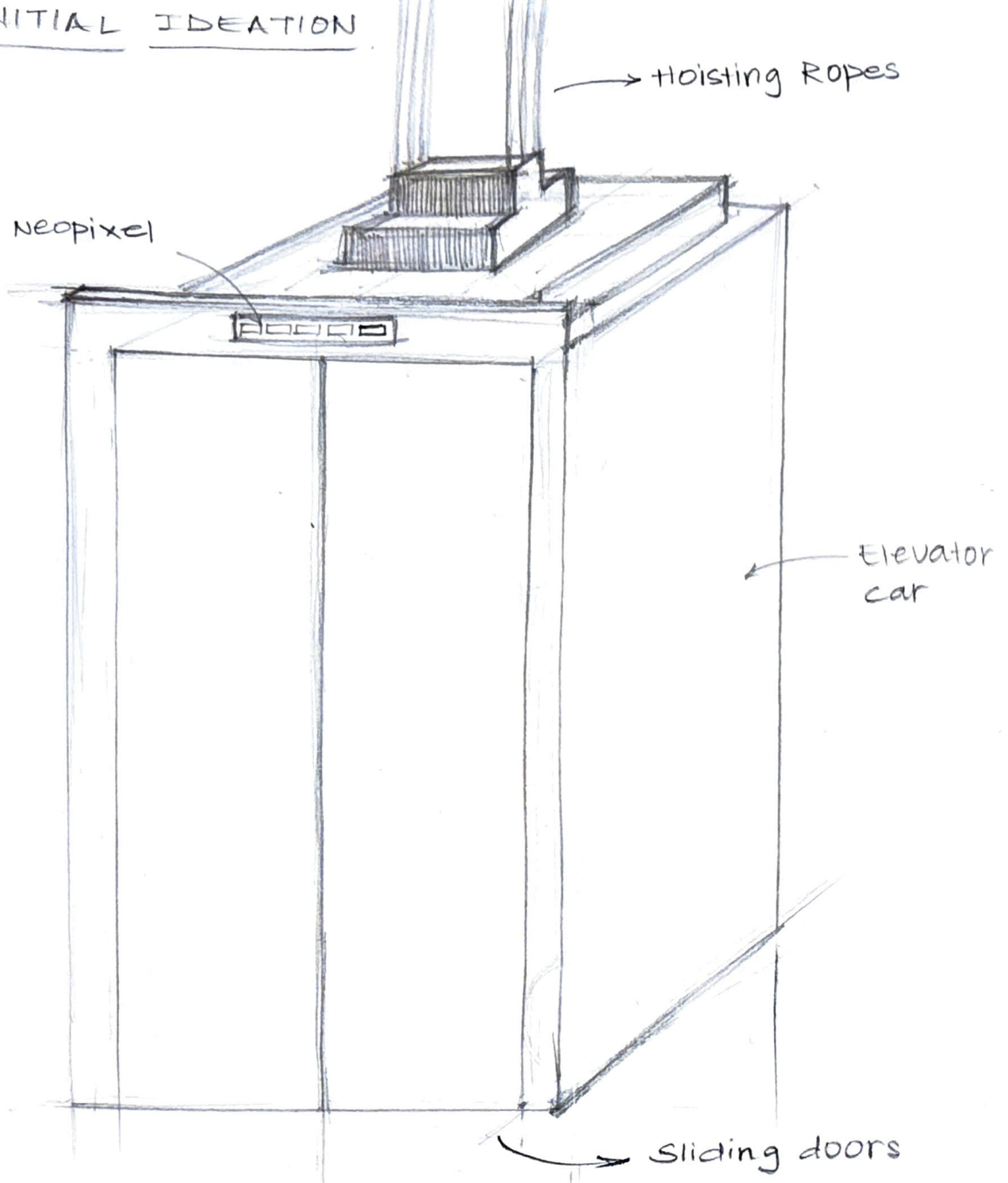

Mechanisms

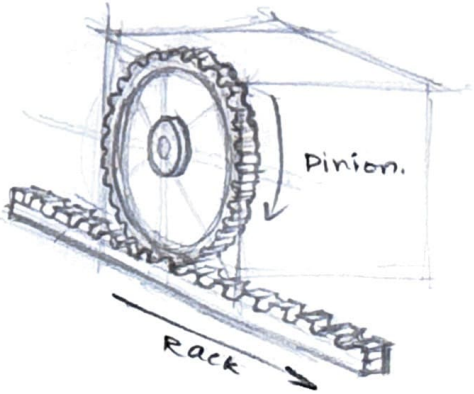

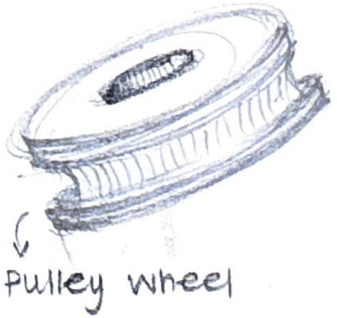
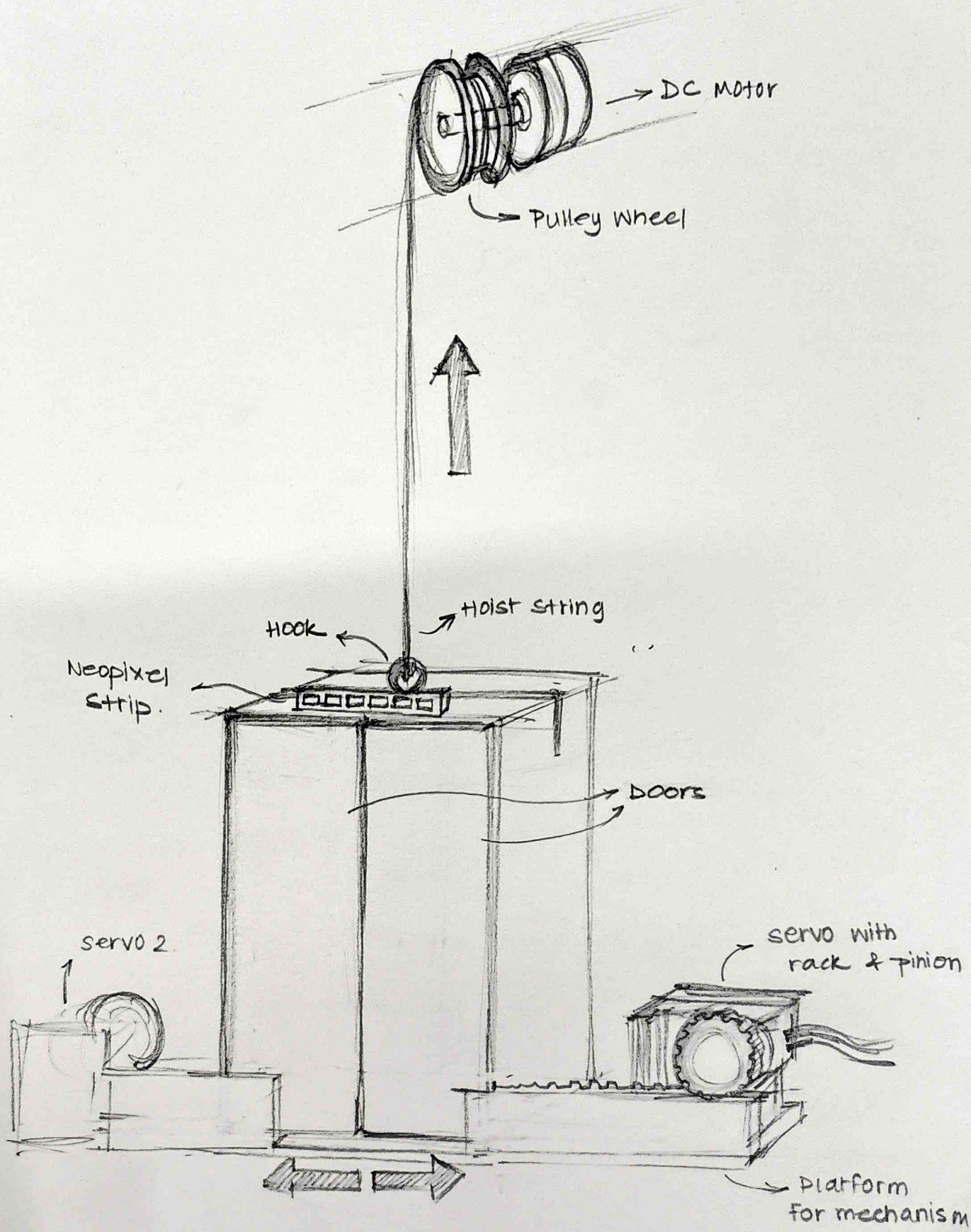
FINAL SYSTEM