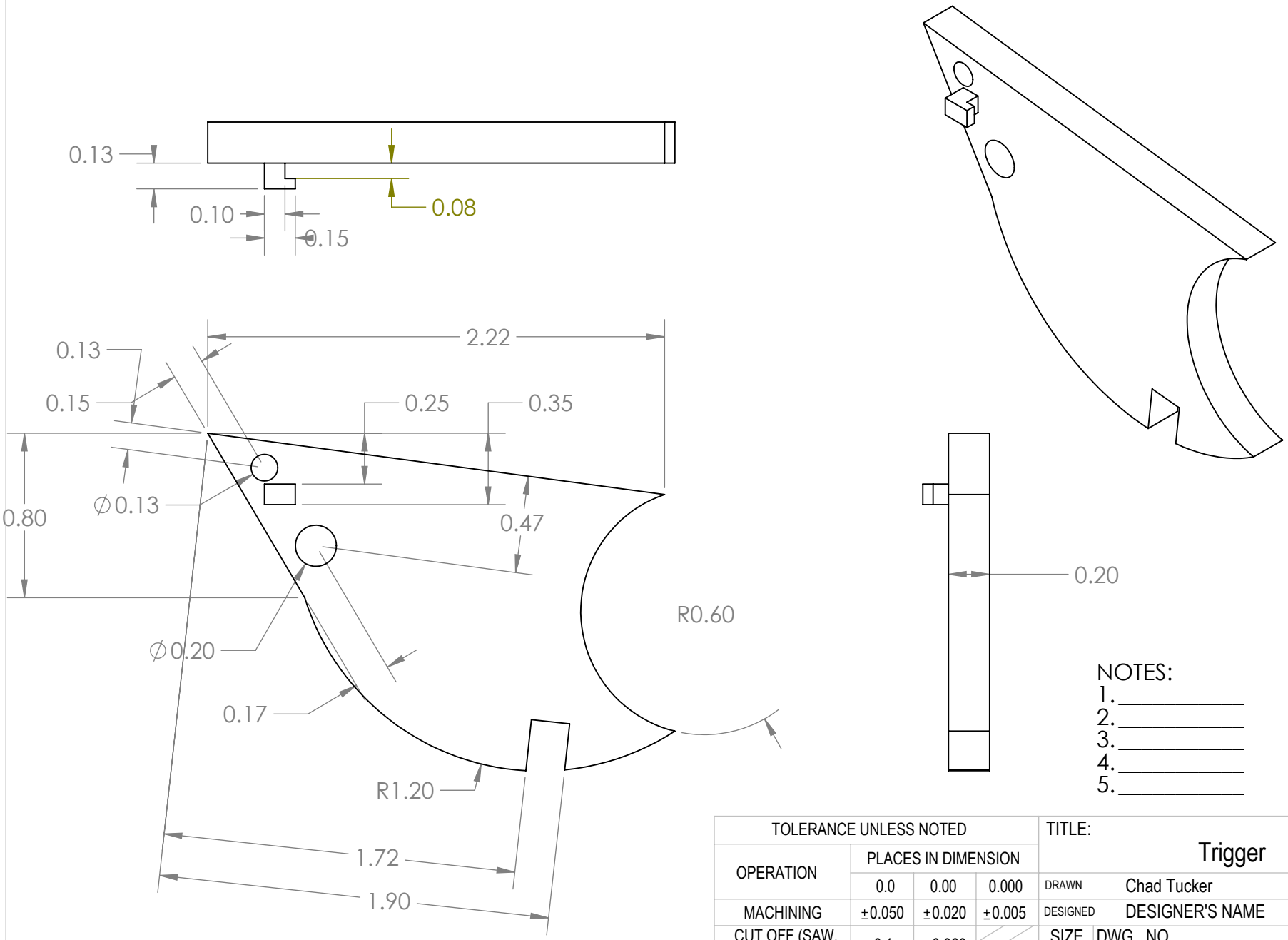

NOTES:
1. _____
2. _____
3. _____
4. _____
5. _____

TOLERANCE UNLESS NOTED				TITLE: Trigger		
OPERATION	PLACES IN DIMENSION					
	0.0	0.00	0.000	DRAWN	Chad Tucker	
MACHINING	±0.050	±0.020	±0.005	DESIGNED	DESIGNER'S NAME	
CUT OFF (SAW, BURN, SHEAR)	±0.1	±0.060		SIZE A	DWG. NO.	REV A
WELDING	±0.1	±0.060				
ANGULAR DIMS	±5	±2	±0.5	SCALE: 2:1		SHEET 1 OF 1

5 4 3 2 1

SOLIDWORKS Educational Product. For Instructional Use Only.