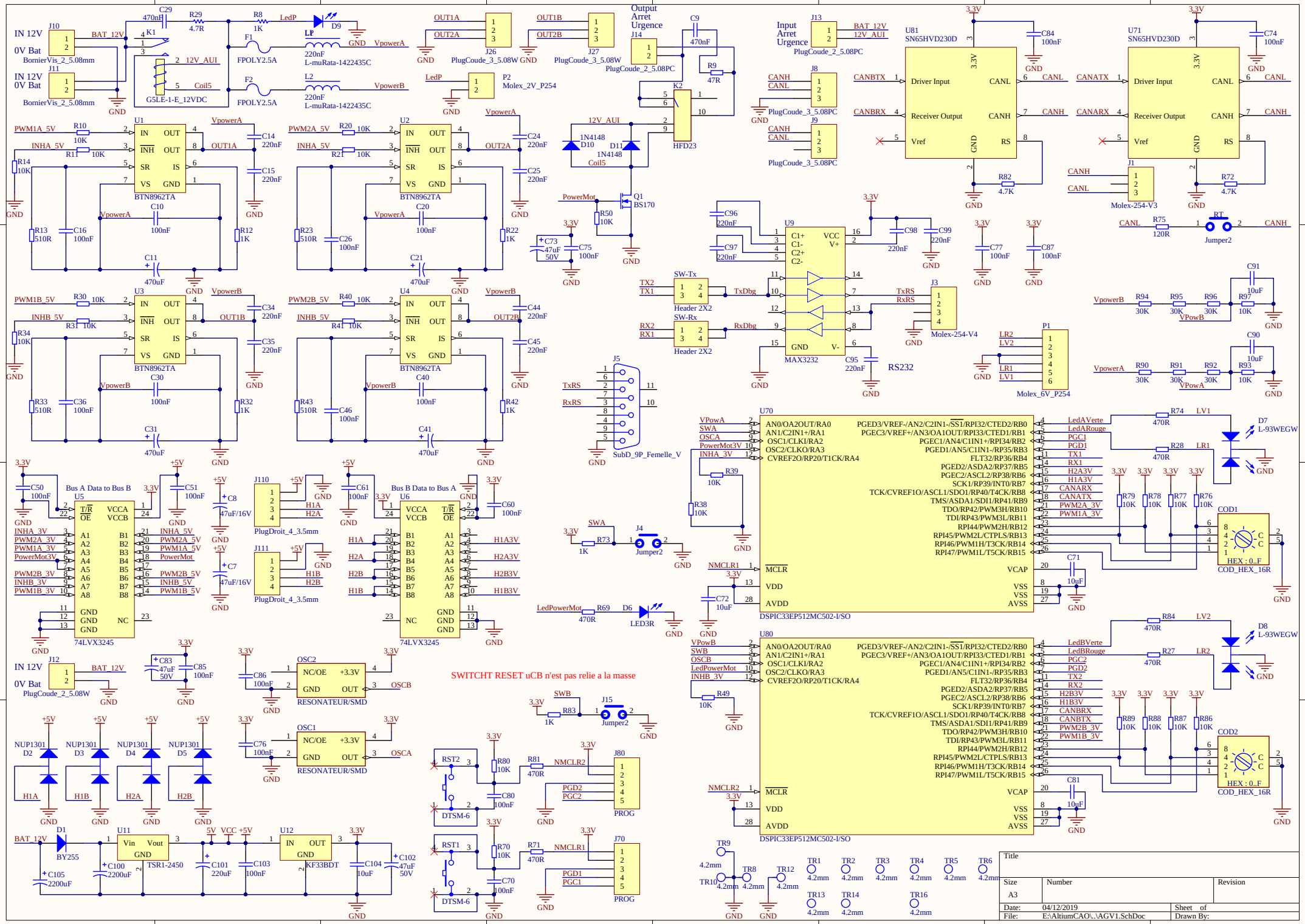
IN 12V
0V Bat
BornierVis_2_5.08mm
J10
J11
BAT_12V
K1
G5LE-1-E_12VDC
12V_AUI
Coil5
C29 470nF
R29 4.7R
R8 1K
LedP
D9
LP
F1
F2
FPOLY2.5A
L2
220nF
L-muRata-1422435C
VpowerA
VpowerB
GND
OUT1A
OUT2A
OUT1B
OUT2B
J26
J27
PlugCoude_3_5.08W
Output Arrest Urgence
J14
PlugCoude_2_5.08PC
C9 470nF
R9 47R
K2
HFD23
P2
Molex_2V_P254
Input Arrest Urgence
J13
BAT_12V
12V_AUI
U81
U71
SN65HVD230D
Driver Input
Receiver Output
Vref
CANL
CANH
RS
CANBTX
CANBRX
CANATX
CANARX
J8
J9
J1
Molex-254-V3
R82 4.7K
R72 4.7K
C84 100nF
C74 100nF
3.3V
U1
U2
U3
U4
BTN8962TA
IN
OUT
INH
SR
IS
VS
PWM1A_5V
INHA_5V
PWM2A_5V
INA_5V
PWM1B_5V
INHB_5V
PWM2B_5V
INB_5V
R10 10K
R11 10K
R14 10K
R13 510R
R12 1K
R20 10K
R21 10K
R23 510R
R22 1K
R30 10K
R31 10K
R34 10K
R33 510R
R32 1K
R40 10K
R41 10K
R43 510R
R42 1K
C10 100nF
C11 470uF
C14 220nF
C15 220nF
C16 100nF
C20 100nF
C21 470uF
C24 220nF
C25 220nF
C26 100nF
C30 100nF
C31 470uF
C34 220nF
C35 220nF
C36 100nF
C40 100nF
C41 470uF
C44 220nF
C45 220nF
C46 100nF
1N4148
D10
D11
Coil5
PowerMot
Q1
BS170
R50 10K
C73 47uF 50V
C75 100nF
C96 220nF
C97 220nF
C98 220nF
C99 220nF
U9
MAX3232
C1+
C1-
C2+
C2-
VCC
V+
V-
C95 220nF
RS232
SW-Tx
SW-Rx
Header 2X2
TX2
TX1
RX2
RX1
TxDbg
RxDbg
TxRS
RxRS
J3
Molex-254-V4
P1
Molex_6V_P254
LR2
LV2
LR1
LV1
C77 100nF
C87 100nF
R75 120R
RT
Jumper2
CANL
CANH
VpowerB
VpowerA
R94 30K
R95 30K
R96 30K
R97 10K
R90 30K
R91 30K
R92 30K
R93 10K
C91 10uF
C90 10uF
VPowB
VPowA
J5
SubD_9P_Femelle_V
U70
U80
DSPIC33EP512MC502-I/SO
AN0/OA2OUT/RA0
AN1/C2IN1+/RA1
OSC1/CLKI/RA2
OSC2/CLKO/RA3
CVREF2O/RP20/T1CK/RA4
PGED3/VREF-/AN2/C2IN1-/SS1/RPI32/CTED2/RB0
PGEC3/VREF+/AN3/OA1OUT/RPI33/CTED1/RB1
PGEC1/AN4/C1IN1+/RPI34/RB2
PGED1/AN5/C1IN1-/RP35/RB3
FLT32/RP36/RB4
PGED2/ASDA2/RP37/RB5
PGEC2/ASCL2/RP38/RB6
SCK1/RP39/INT0/RB7
TCK/CVREF1O/ASCL1/SDO1/RP40/T4CK/RB8
TMS/ASDA1/SDI1/RP41/RB9
TDO/RP42/PWM3H/RB10
TDI/RP43/PWM3L/RB11
RPI44/PWM2H/RB12
RPI45/PWM2L/CTPLS/RB13
RPI46/PWM1H/T3CK/RB14
RPI47/PWM1L/T5CK/RB15
MCLR
VDD
AVDD
VCAP
VSS
AVSS
VPowA
SWA
OSCA
PowerMot3V
INHA_3V
VPowB
SWB
OSCB
LedPowerMot
INHB_3V
LedAVerte
LedARouge
LedBVerte
LedBRouge
PGC1
PGD1
PGC2
PGD2
TX1
RX1
TX2
RX2
H2A3V
H1A3V
H2B3V
H1B3V
CANARX
CANATX
CANBRX
CANBTX
PWM2A_3V
PWM1A_3V
PWM2B_3V
PWM1B_3V
R39 10K
R38 10K
R49 10K
R74 470R
R28 470R
R84 470R
R27 470R
D7 L-93WEGW
D8 L-93WEGW
R79 10K
R78 10K
R77 10K
R76 10K
R89 10K
R88 10K
R87 10K
R86 10K
C71 10uF
C81 10uF
COD1
COD2
HEX : 0..F
COD_HEX_16R
NMCLR1
NMCLR2
C72 10uF
R69 470R
D6
LED3R
R73 1K
R83 1K
J4
J15
Jumper2
U5
U6
74LVX3245
Bus A Data to Bus B
Bus B Data to Bus A
T/R
OE
VCCA
VCCB
GND
NC
INHA_3V
PWM2A_3V
PWM1A_3V
PowerMot3V
PWM2B_3V
INHB_3V
PWM1B_3V
INHA_5V
PWM2A_5V
PWM1A_5V
PowerMot
PWM2B_5V
INHB_5V
PWM1B_5V
H1A
H2A
H2B
H1B
J110
J111
PlugDroit_4_3.5mm
C8 47uF/16V
C7 47uF/16V
C50 100nF
C51 100nF
C61 100nF
C60 100nF
J12
PlugCoude_2_5.08W
C83 47uF 50V
C85 100nF
C86 100nF
C76 100nF
OSC2
OSC1
NC/OE
+3.3V
OUT
RESONATEUR/SMD
OSCB
OSCA
SWITCHT RESET uCB n'est pas relie a la masse
NUP1301
D2
D3
D4
D5
RST2
RST1
DTSM-6
R80 10K
R70 10K
R81 470R
R71 470R
C80 100nF
C70 100nF
J80
J70
PROG
PGD2
PGC2
PGD1
PGC1
D1
BY255
BAT_12V
U11
U12
Vin
Vout
TSR1-2450
KF33BDT
5V
VCC
C105 2200uF
C100 2200uF
C101 220uF
C103 100nF
C104 10uF
C102 47uF 50V
TR9
TR10
TR8
TR12
TR1
TR2
TR3
TR4
TR5
TR6
TR13
TR14
TR16
4.2mm
Title
Size
A3
Number
Revision
Date: 04/12/2019
File: E:\AltiumCAO\..\AGV1.SchDoc
Sheet of
Drawn By: