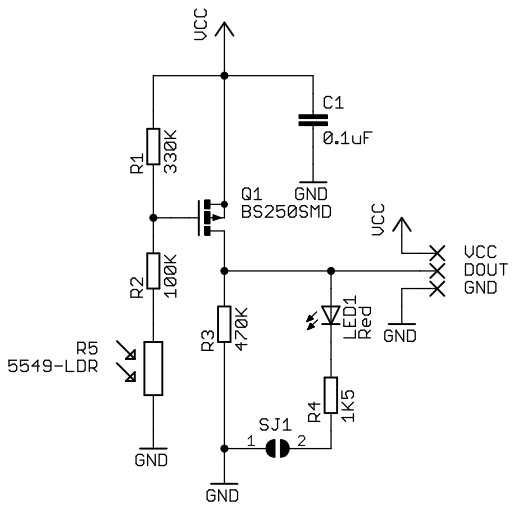


open hardware

Attribution-Share-Alike (CC-BY-SA)

© Samuel235

TITLE: HominiPulseSensorBatt

Document Number:

REV: 1

Date: 05/04/2017 13:11

Sheet: 1/1