THE MALAWI NATIONAL EXAMINATIONS B

2002 MALAWI SCHOOL CERTIFICATE OF EDUCATION EXAMINATION

MATHEMATICS

Subject Number: M131/I

Tuesday, 15 October

Time allowed: 2 hours
9:00 - 11:00 am

PAPER I

(100 marks)

2002

Instructions:

1. **This paper contains 6 pages. Please check.**
2. Answer **all** the **24** questions in this paper.
3. The maximum number of marks for each answer is indicated against each question.
4. Mathematical tables and answer books are provided.
5. Used supplementary sheets must be handed in together with the answer book.
6. All working must be clearly shown; it should be done on the same sheet as the rest of the answer.
7. Use of electronic calculators is **not** allowed.
8. Write your **Examination Number** on top of each page of your Answer Book.

© 2002 MANEB

Answer **all** the **twenty four** questions.

1. Simplify $\dfrac{(3\frac{1}{2}\times 1\frac{1}{2})-3}{9}$ $= \dfrac{(\frac{7}{2}\cdot\frac{3}{2})-\frac{12}{4}}{9} = \dfrac{21-12}{9\cdot 4} = \dfrac{9}{9\cdot 4} = \dfrac{1}{4}$

(4 marks)

2. **Figure 1** is a pie-chart representing sales of three commodities; tobacco, tea and coffee.

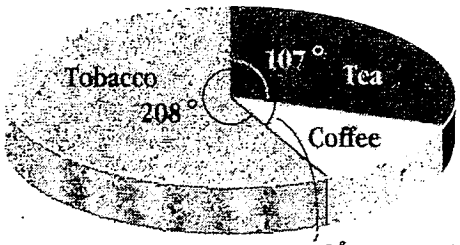

$360^\circ - 315 = 45^\circ$

Figure 1

Express coffee sales as a percentage of the total sales. $\frac{5}{2\cancel{4}}\,\frac{\cancel{45}}{\cancel{360}}\times\frac{5}{\cancel{100}} = \frac{25}{2} = 12.5\,\%$ **(4 marks)**

3. P is a point on the graph whose equation is $y = x^2 - 6x$. If the x – coordinate of P is 2, calculate its y coordinate.

$y = 4 - 12 = -8$

(3 marks)

4. In a cyclic quadrilateral ABCD twice angle BAD = three times angle DCB. Calculate angle BAD. **(6 marks)**

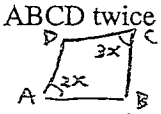

$2x + 3x = 180$

$\therefore x = \frac{180}{5} = 36^\circ$

$36 \times 2 = 72^\circ$

5. Given that angle θ is acute and that $\log\cos\theta = 1\cdot 75$, evaluate $(\text{Cos}\,\theta)^2$.

(2) $-1 \leq \cos\theta \leq 1$

(3 marks)

6. Factorise completely, $1 - 16\,(1 - y)^2$ giving your answer in its simplest form.

$\{1+4(1-y)\}\{1-4(1-y)\} = (5-4y)(-3+4y)$

(3 marks)

7. In **Figure 2, DB** is perpendicular to the line **ABC, AE** = 25 cm, **BC** = 15 cm, angle **EAB** = 30°, and angle **BCD** = 45°.

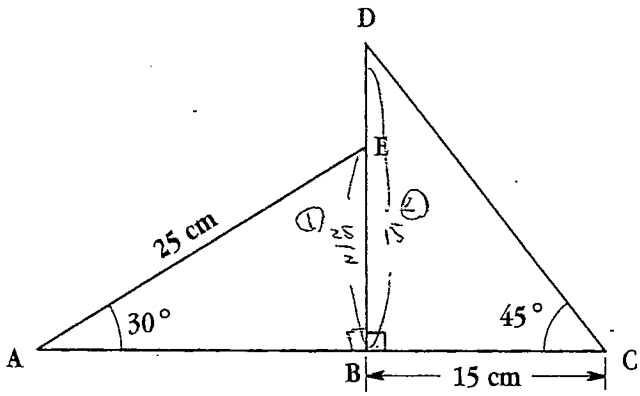

$DE = \frac{30}{2} - \frac{25}{2} = \frac{5}{2} = 2.5$ cm

Figure 2

Calculate the length of **DE.**

(6 marks)

Continued →

8. Given that $\dfrac{a^7}{a^{-3} \times a^2} = a^y$, $\dfrac{a^7}{a^{-1}} = a^8 = a^y$

find the value of y. $\therefore y = 8$ **(4 marks)**

9. In **Figure 3**, **D** is the midpoint of the minor arc **BDC**, angle **ABC** = 40° and angle **ACB** = 60°.

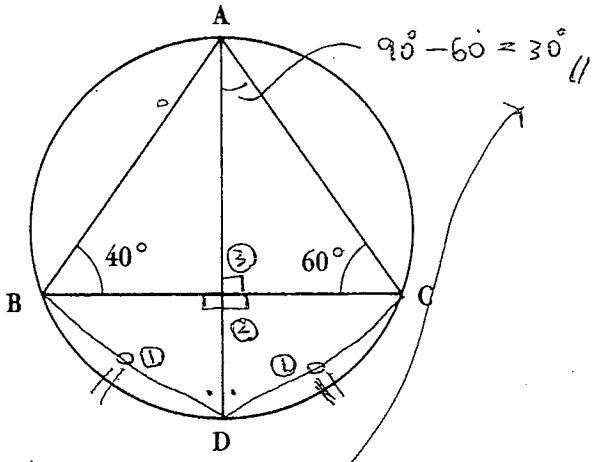

Figure 3

Calculate angle **DAC.** **(4 marks)**

10. Make x the subject of the formula $4y = a^x$. $\log 4y = x \log a$ $\therefore x = \dfrac{\log 4y}{\log a}$ **(3 marks)**

11. In **Figure 4**, **O** is the centre of the centre of the circle, **TA** is a tangent, **BC** is parallel to **TA** and angle **BCT** = 37°.

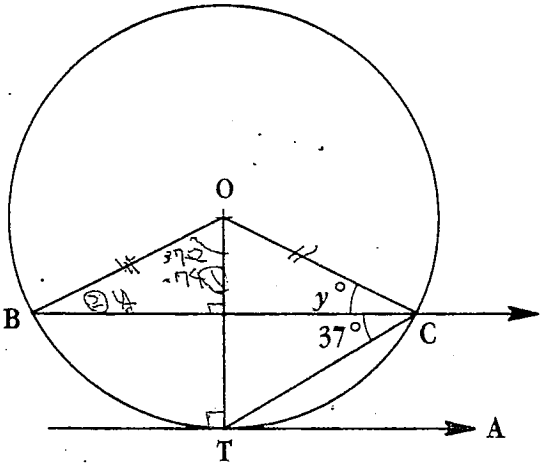

③ $y + 74 + 90 = 180$
$y = 180 - 164$
$= 16°$

Figure 4

Calculate the value of the angle marked y. **(5 marks)**

12 Solve for x $\log_x 125^{-1} = -3$. $x^{-3} = 125^{-1}$ $x = 5$ $\dfrac{1}{x^3} = \dfrac{1}{5^3}$ **(4 marks)**

13. Given that $2x$, x, $x + 3$, ...are terms in an Arithmetic Progression. Calculate the value of x.

Continued →

14. In **Figure 5**, **AB** is parallel to **CD**, **EF** and **GH**. The parallel lines **AB**, **CD**, **EF** and **GH** intersect **QR** such that **QX** = **XY** = **YR**. **SU** = 9 cm, **DU** = 8 cm and **TV** = 5 cm.

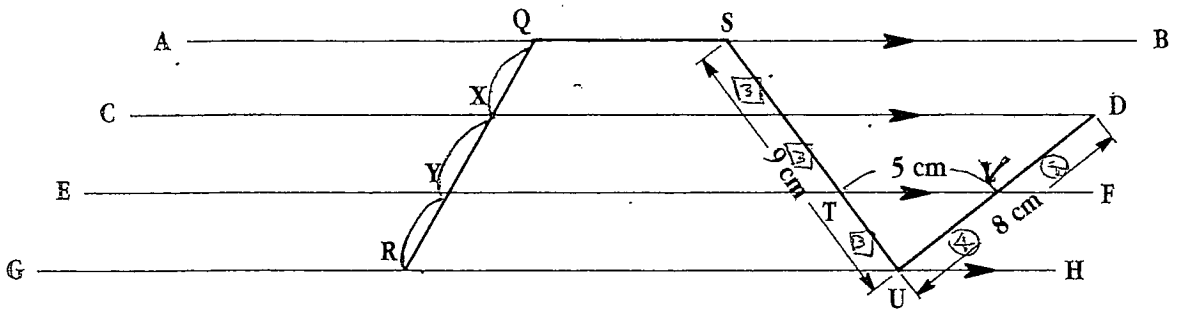

Figure 5

$3^2 + 4^2 = 5^2$

$\therefore \angle TUV = 90°$

Prove that angle **TUV** = 90°. **(5 marks)**

15. Simplify $\sqrt[3]{8a} + 2\sqrt[3]{a} - \sqrt[3]{27a}$ giving your answer in the simplest form. **(4 marks)**

$= \sqrt[3]{8a + 8a - 27a} = \sqrt[3]{-11a} = -\sqrt[3]{11a}$

$2\sqrt[3]{a} + 2\sqrt[3]{a} - 3\sqrt[3]{a} = \sqrt[3]{a}$

16. The number of people (N) who suffer from Malaria in a month is inversely proportional to the amount of insecticides (M) applied that month. When 5 litres of insecticide are applied, only 1 person suffers from Malaria. Find the equation connecting N and M. **(3 marks)**

$N = \frac{k}{M} \quad \therefore k = 5$

$1 = \frac{k}{5} \quad \therefore N = \frac{5}{M}$

17. P is a set of points (x, y) which satisfies the three inequalities:

$x \geq 0;$

$x + y \leq 4;$ $\quad y \leq -x + 4$

$y \geq x + 1.$

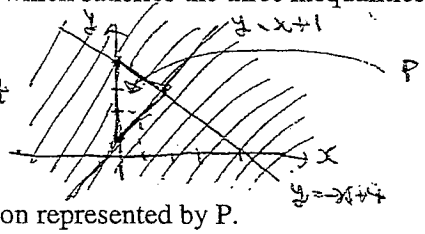

Show on a graph the region represented by P.

18. Using a ruler and a pair of compasses only, construct a circle of radius 3 cm and a chord **AB** which subtends an angle on the circumference of 45°. Measure the length of the chord. **(4 marks)**

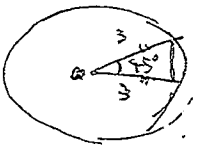

19. Figure 6 shows travel graphs of a minibus that leaves Mzuzu at 07:00 hours and arrives in Blantyre at 15:00 hours and a car that leaves Blantyre at 07:30 hours arrives in Mzuzu at 14:30 hours. From Mzuzu, the minibus travels at a constant speed and arrives in Lilongwe at 10:30 hours and immediately proceeds to Blantyre at another constant speed. From Blantyre the car travels at a constant speed and arrives in Lilongwe at 10:00 hours. At noon the car leaves for Mzuzu at a constant speed.

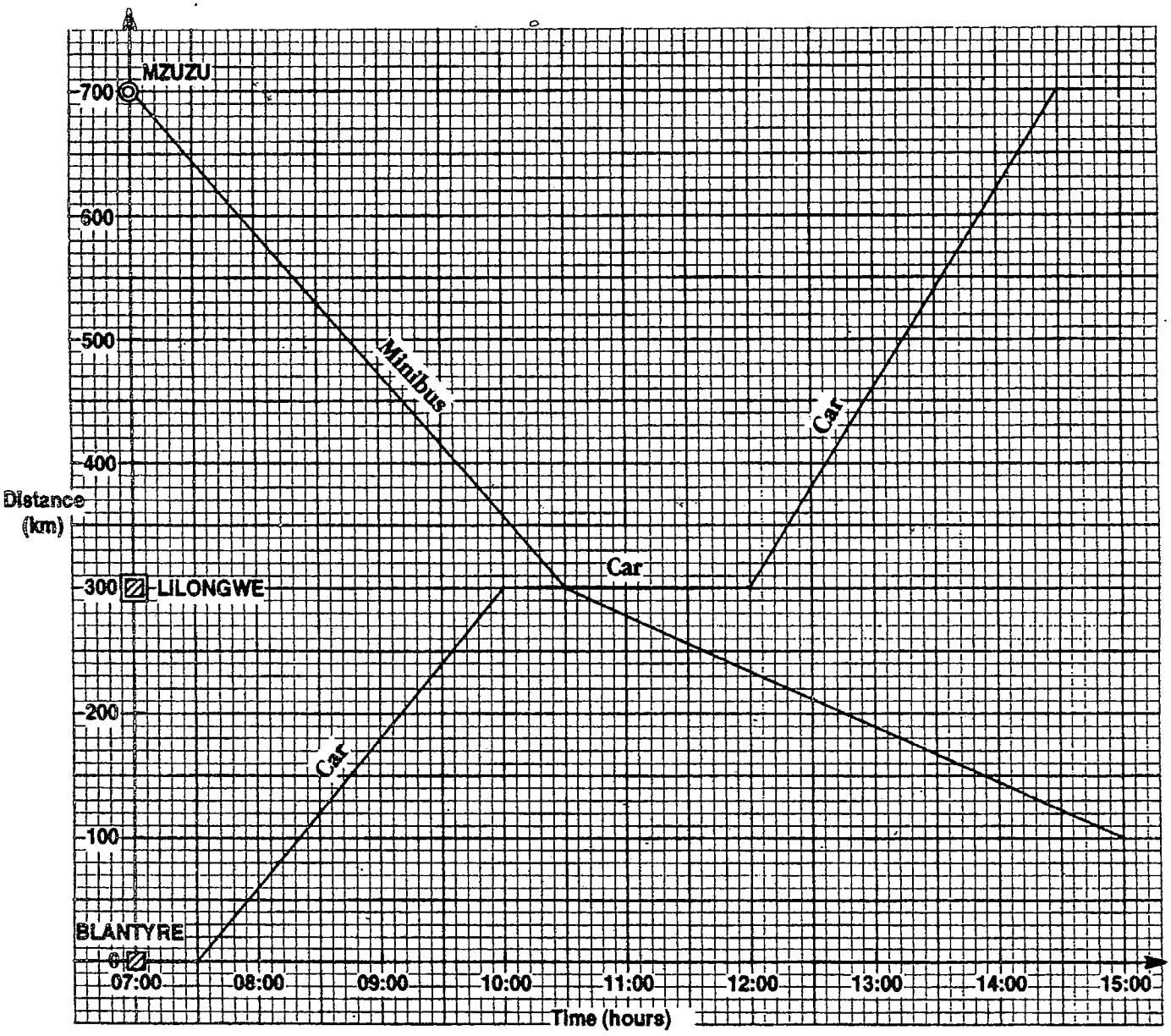

Figure 6

Calculate the average speed of the minibus during the time when the car stopped in Lilongwe.

(5 marks)

Continued ⟶

36
67

20. A straight line passes through points A(1, – 1) and B(7, – 9). Calculate the distance between **A** and **B**. **(4 marks)**

$\sqrt{6^2+8^2} = 10$

21. The volume of a cone is 462 cm^3. If its height is 9 cm, calculate its radius.

(Taking $\pi = \frac{22}{7}$ and volume of a cone $= \frac{1}{3}\pi r^2 h$). **(3 marks)**

$462 = \frac{1}{3} \cdot \frac{22}{7} \cdot r^2 \cdot 9$

$r = 7$ //

22. In **Figure 7**, triangle **ABC** is similar to triangle **BAD**.

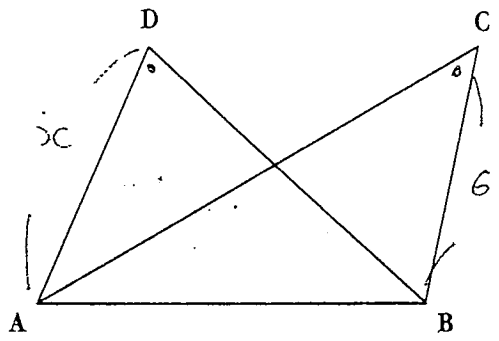

Figure 7

If the area of triangle **ABC** = 72 cm^2, area of triangle **BAD** = 200 cm^2 and **BC** = 6 cm, calculate the length of **AD**. **(4 marks)**

$72 : 200 = 6^2 : x^2 \Rightarrow x = \sqrt{\frac{5 \cdot 6 \cdot 200 \cdot 6}{72}} = 10$

23. In **Figure 8**, triangle **ABC** is isosceles in which **AB** = **AC** and angle **BAC** = 140°. **AB** and **AC** are produced to **D** and **E** respectively. The bisectors of angle **CBD** and angle **BCE** meet at **O**.

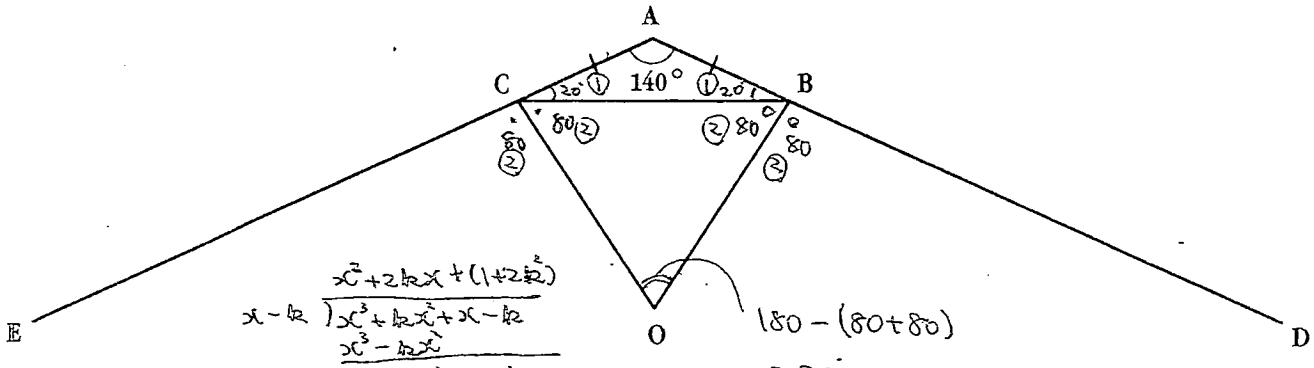

$180 - (80 + 80) = 20°$ //

Figure 8

Calculate angle **BOC**. **(6 marks)**

$$\begin{array}{r} x^2 + 2kx + (1+2k^2) \\ x - k \,\big)\, x^3 + kx^2 + x - k \\ x^3 - kx^2 \\ \hline 2kx^2 + x - k \\ 2kx^2 - 2k^2x \\ \hline (1+2k^2)x - k \\ (1+2k^2)x - k - 2k^3 \\ \hline 2k^3 \end{array}$$

24. When a polynomial $x^3 + kx^2 + x - k$ *is* divided by $(x - k)$ the remainder is 2. Calculate the value of k. **(4 marks)**

$k^3 + k^3 + k - k = 2k^3 = 2$

$\therefore k = 1$

END OF QUESTION PAPER

NB: This paper contains 6 pages.