CANDIDATE NAME:_____

CHITIPA EDUCATION CLUSTER

2019 MALAWI SCHOOL CERTICATE OF EDUCATION MOCK EXAMINATION

PHYSICS

Subject Number: M164/II
Time Allowed: 2hrs
8:00 am – onwards

Friday, 29th March

PAPER II
Practical
(40 marks)

Instructions

1. **This paper contains 5 printed pages. Please check.**
2. Write your **Name** and **school** on top of each page of your question paper.
3. Write your answers on the question paper.
4. This paper contains **two** sections, **A** and **B**.
5. In Section **A** there are **two** practical questions to be answered in **1 hour.**
6. You should spend 30 minutes on each question. The 30 minutes period allowed for each question includes 3 minutes to tidy up the apparatus and have it checked by the supervisor.
7. The maximum number of marks for each answer is indicated against each question.
8. Section **B** consists of **two** descriptive questions on practical work to be answered in **1 hour**. Marks will be given for accurate and orderly presentation of facts supported by relevant diagrams
9. In the table provided on this page, **tick** against the question number you have answered
10. At the end of the examination, hand in your paper to the invigilator.

Question Number	Tick if answered	Do not write in these columns	
1			
2			
3			
4			

©2019 CHITIPA EDUCATION CLUSTER

Section A (20 marks)

1. With the help of a well labelled diagram, explain the effect of heat on solids.

_____
_____
_____
_____
_____
_____
_____
_____
_____
_____
_____
_____
_____
_____
_____

(10 marks)

2. Describe an experiment that can be carried out to determine the average speed of an athlete using a stop watch and tape measure.

_____
_____
_____
_____
_____
_____
_____
_____
_____
_____
_____
_____
_____
_____
_____

(10 marks)

Section B (20 marks)

3. You are provided with a piece of thread, 100g bob, clamp stand and stop watch.

(a) Set up the apparatus as shown in **Figure 1**

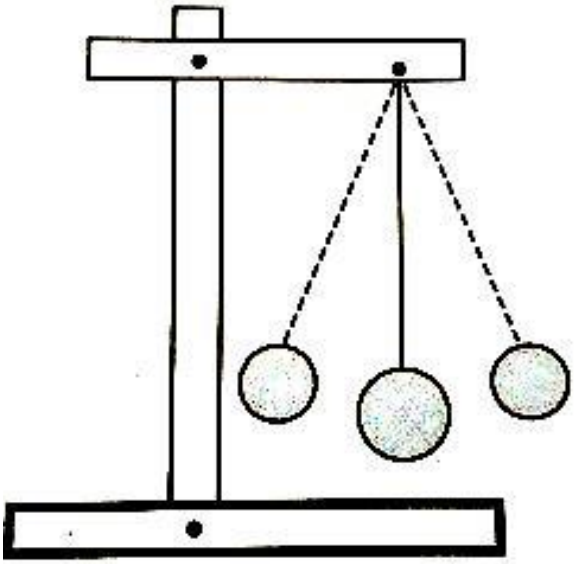

Figure 1: A Pendulum

(b) With the string measuring 50 cm, displace the bob for an amplitude of 10 cm as shown in **Figure 1** and allow it to swing freely

(c) Record the time taken for 10 vibrations in **table 1**

Length of pendulum (cm)	Time taken for 10 vibrations	Frequency (10 oscillations/time taken)
50		
40		
30		
20		
10		

(d) Repeat steps 2 and 3 with the string length.

(e) Complete the table by filling the frequency column

(f) Plot the graph of frequency against the length of the pendulum.

(10 marks)

4. You are provided with a card board, a one metre ruler, a candle, lens, lens holder and matches.

(a) Set up the apparatus as shown in **Figure 2**

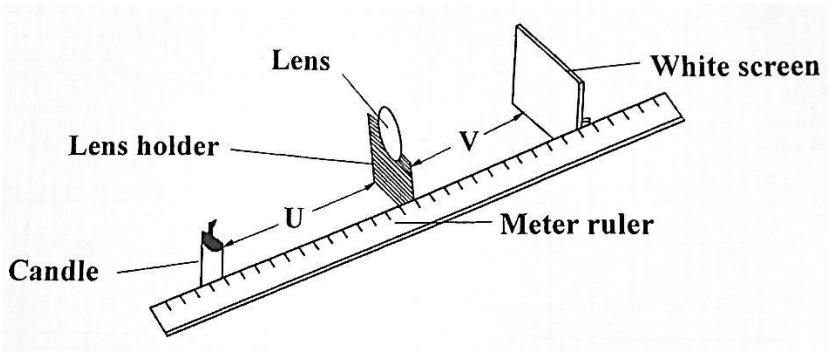

(b) Put a burning candle on a ruler at 0 cm and a lens at 22.5 cm

(c) Adjust position of the screen by sliding to or away from the lens until a sharp image of burning candle forms on the screen

(d) Repeat steps 2 and 3 by putting the lens at 25 cm, 30 cm, 35 cm, 40 cm, 45 cm, 55 cm and 60 cm.

(e) Fill the table below

Object distance U (cm)	Image distance V (cm)	U+V (cm)
22.5		
25		
30		
35		
40		
45		
50		
55		
60		

(f) Using suitable scale, plot a graph of **u+v** against **u** on the graph paper.

(g) Using the graph line work out focal length of the lens using the relationship either **2F=U** or **4F= U+V**

(10 marks)

END OF QUESTION PAPER

NB: This paper contains 5 printed pages