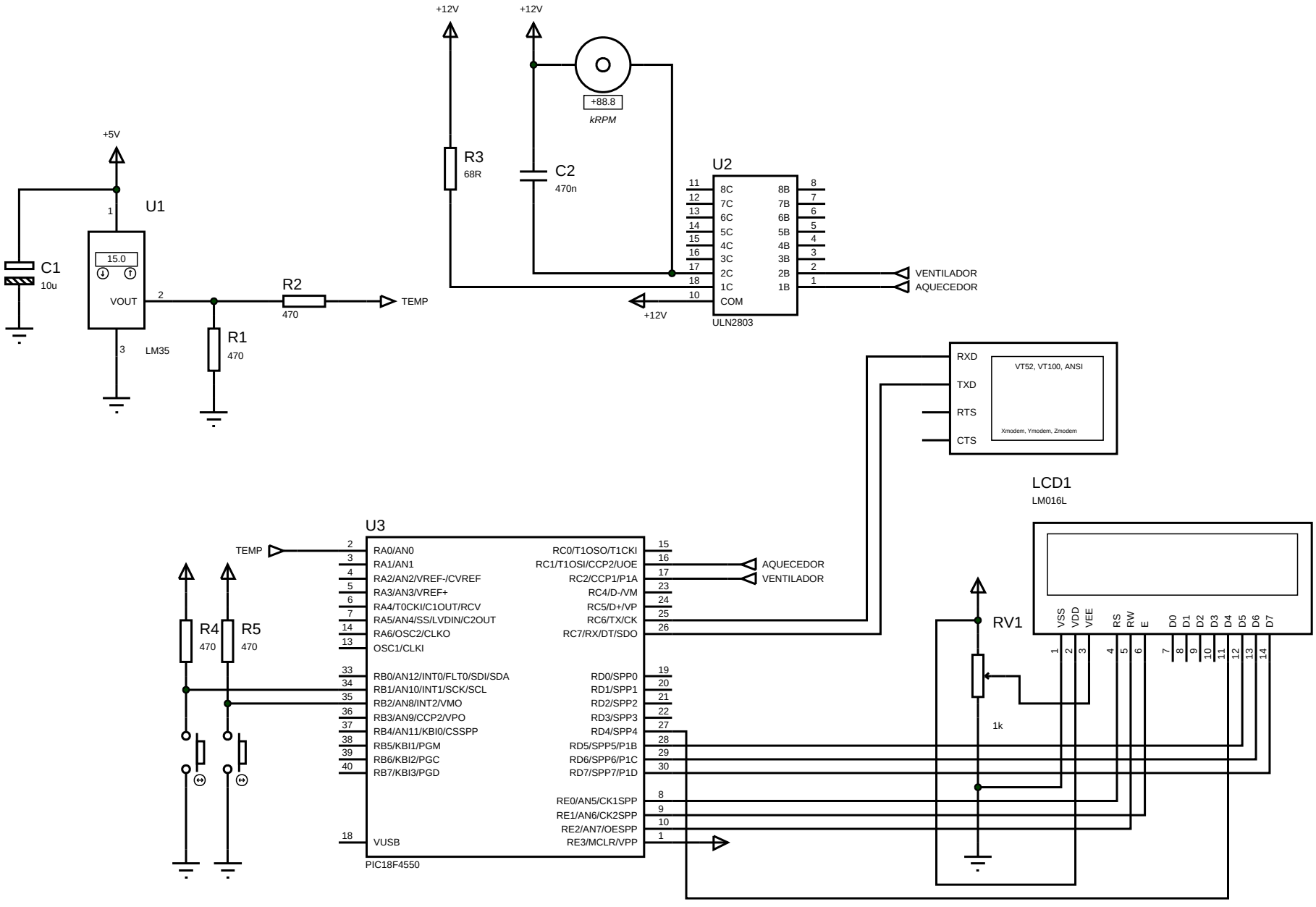
+5V
U1
1
15.0
C1
10u
VOUT
2
3
LM35
R2
470
TEMP
R1
470
+12V
+12V
R3
68R
C2
470n
+88.8
kRPM
U2
11 8C
12 7C
13 6C
14 5C
15 4C
16 3C
17 2C
18 1C
10 COM
8B 8
7B 7
6B 6
5B 5
4B 4
3B 3
2B 2
1B 1
VENTILADOR
AQUECEDOR
+12V
ULN2803
RXD
TXD
RTS
CTS
VT52, VT100, ANSI
Xmodem, Ymodem, Zmodem
LCD1
LM016L
U3
TEMP
2 RA0/AN0
3 RA1/AN1
4 RA2/AN2/VREF-/CVREF
5 RA3/AN3/VREF+
6 RA4/T0CKI/C1OUT/RCV
7 RA5/AN4/SS/LVDIN/C2OUT
14 RA6/OSC2/CLKO
13 OSC1/CLKI
33 RB0/AN12/INT0/FLT0/SDI/SDA
34 RB1/AN10/INT1/SCK/SCL
35 RB2/AN8/INT2/VMO
36 RB3/AN9/CCP2/VPO
37 RB4/AN11/KBI0/CSSPP
38 RB5/KBI1/PGM
39 RB6/KBI2/PGC
40 RB7/KBI3/PGD
18 VUSB
15 RC0/T1OSO/T1CKI
16 RC1/T1OSI/CCP2/UOE
17 RC2/CCP1/P1A
23 RC4/D-/VM
24 RC5/D+/VP
25 RC6/TX/CK
26 RC7/RX/DT/SDO
19 RD0/SPP0
20 RD1/SPP1
21 RD2/SPP2
22 RD3/SPP3
27 RD4/SPP4
28 RD5/SPP5/P1B
29 RD6/SPP6/P1C
30 RD7/SPP7/P1D
8 RE0/AN5/CK1SPP
9 RE1/AN6/CK2SPP
10 RE2/AN7/OESPP
1 RE3/MCLR/VPP
PIC18F4550
AQUECEDOR
VENTILADOR
R4
470
R5
470
RV1
1k
VSS VDD VEE RS RW E D0 D1 D2 D3 D4 D5 D6 D7
1 2 3 4 5 6 7 8 9 10 11 12 13 14