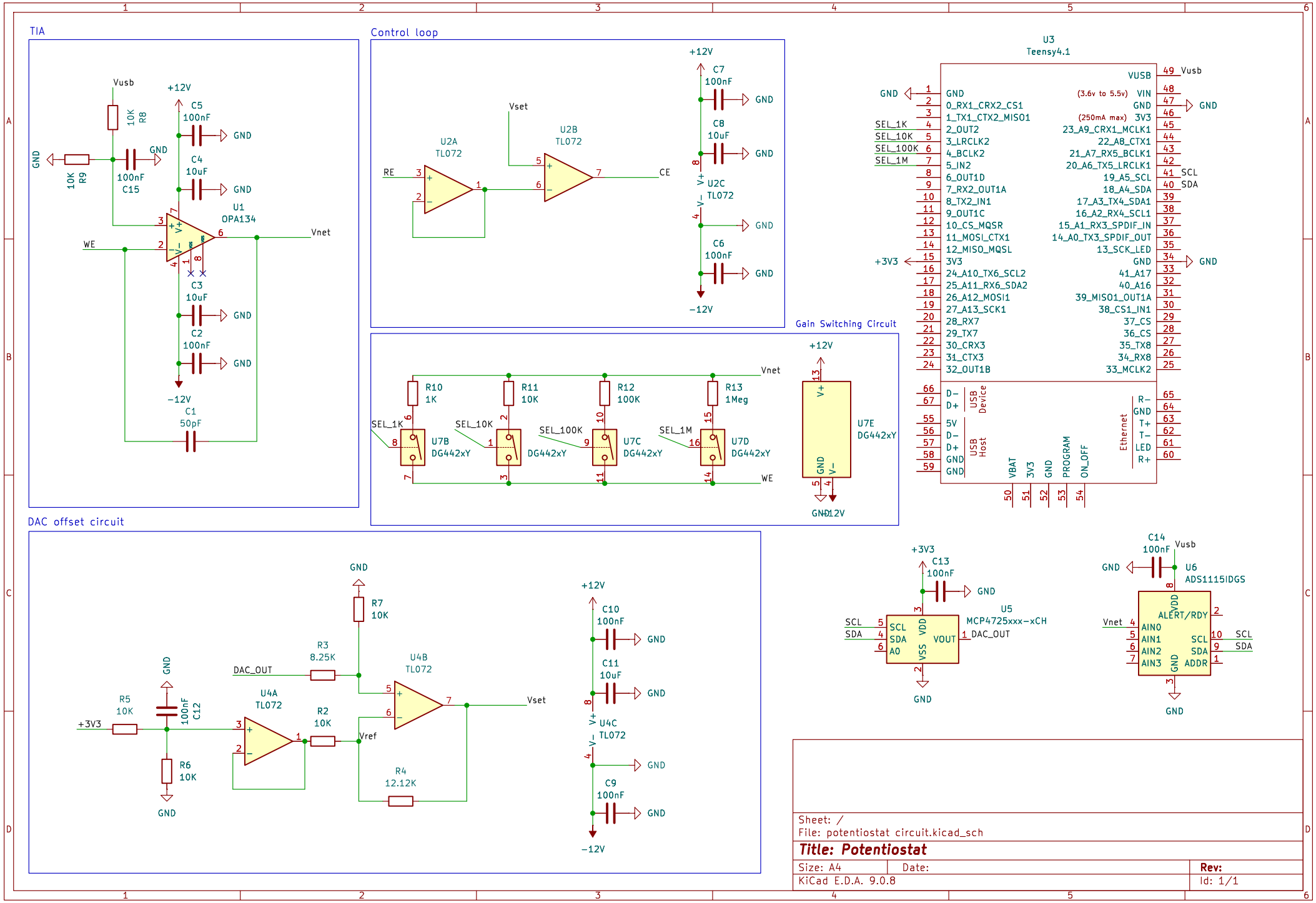
TIA
Vusb
+12V
10K R8
C5 100nF
GND
C4 10uF
GND
10K R9
100nF C15
U1 OPA134
WE
Vnet
C3 10uF
C2 100nF
-12V
C1 50pF
Control loop
Vset
U2A TL072
U2B TL072
RE
CE
C7 100nF
C8 10uF
U2C TL072
C6 100nF
Gain Switching Circuit
R10 1K
R11 10K
R12 100K
R13 1Meg
SEL_1K
SEL_10K
SEL_100K
SEL_1M
U7B DG442xY
U7C DG442xY
U7D DG442xY
U7E DG442xY
U3 Teensy4.1
VUSB
VIN (3.6v to 5.5v)
3V3 (250mA max)
SCL
SDA
USB Device
USB Host
Ethernet
VBAT
PROGRAM
ON_OFF
DAC offset circuit
R7 10K
R3 8.25K
DAC_OUT
U4B TL072
U4A TL072
R5 10K
R6 10K
100nF C12
R2 10K
Vref
R4 12.12K
C10 100nF
C11 10uF
U4C TL072
C9 100nF
+3V3
C13 100nF
U5 MCP4725xxx-xCH
VOUT
C14 100nF
U6 ADS1115IDGS
ALERT/RDY
AIN0
AIN1
AIN2
AIN3
ADDR
Sheet: /
File: potentiostat circuit.kicad_sch
Title: Potentiostat
Size: A4
Date:
Rev:
KiCad E.D.A. 9.0.8
Id: 1/1