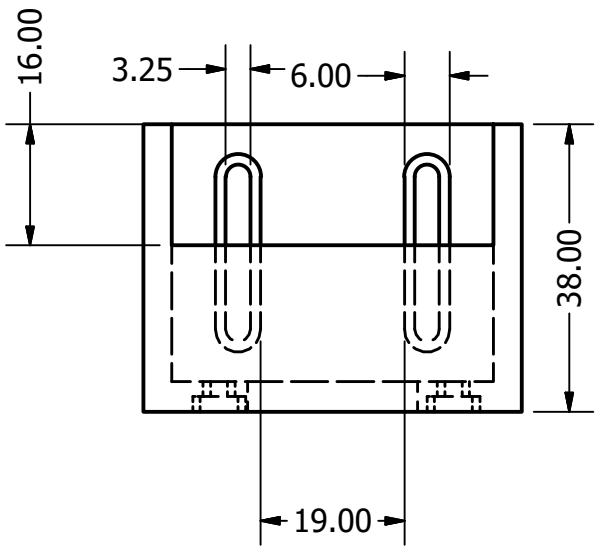

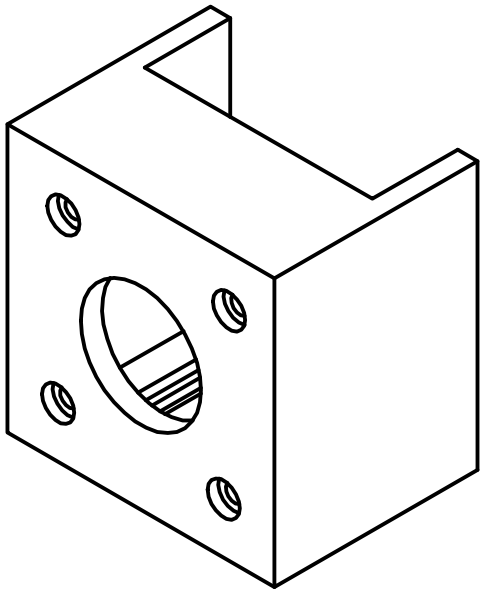

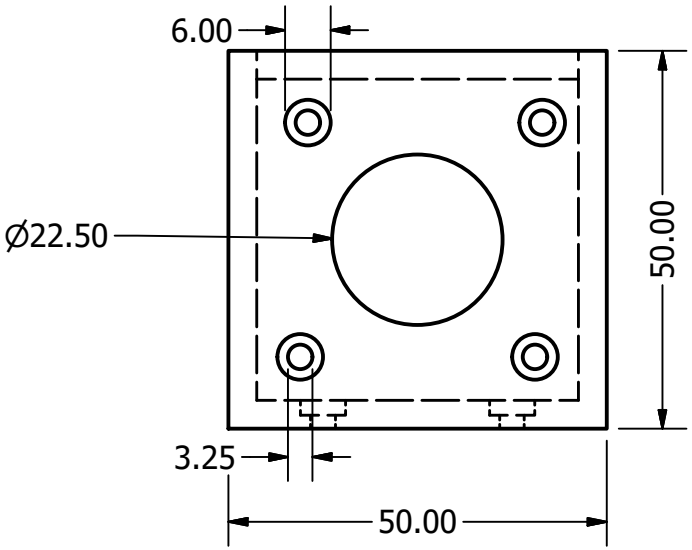

DRAWN Andres Celi		29/05/2017		
CHECKED	TITLE	Stepper mount		
QA				
MFG				
APPROVED				
	SIZE A4		DWG NO	REV
	SCALE	1 : 1		SHEET 1 OF 1