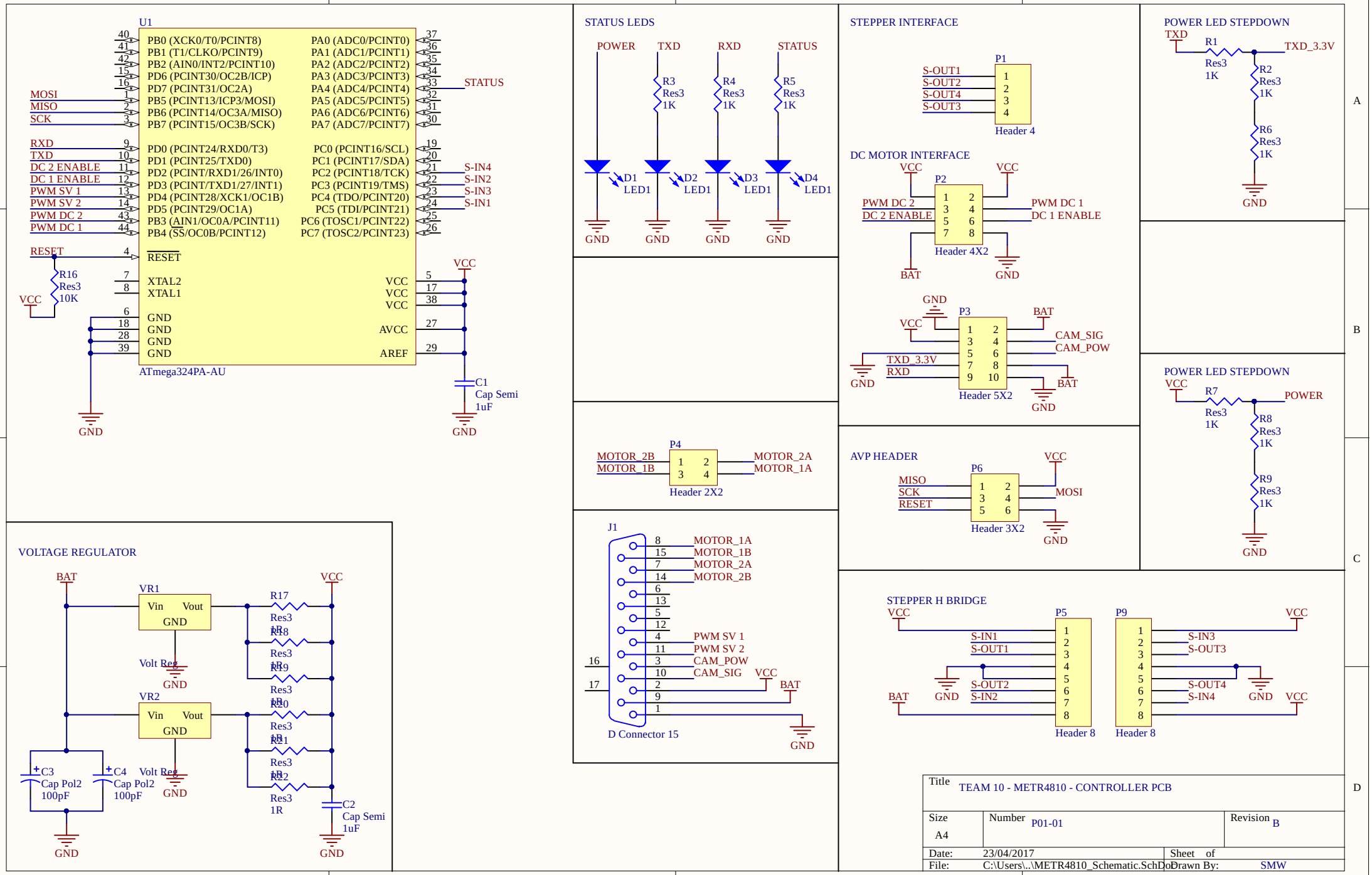
U1
PB0 (XCK0/T0/PCINT8)
PB1 (T1/CLKO/PCINT9)
PB2 (AIN0/INT2/PCINT10)
PD6 (PCINT30/OC2B/ICP)
PD7 (PCINT31/OC2A)
PB5 (PCINT13/ICP3/MOSI)
PB6 (PCINT14/OC3A/MISO)
PB7 (PCINT15/OC3B/SCK)
PD0 (PCINT24/RXD0/T3)
PD1 (PCINT25/TXD0)
PD2 (PCINT/RXD1/26/INT0)
PD3 (PCINT/TXD1/27/INT1)
PD4 (PCINT28/XCK1/OC1B)
PD5 (PCINT29/OC1A)
PB3 (AIN1/OC0A/PCINT11)
PB4 (SS/OC0B/PCINT12)
RESET
XTAL2
XTAL1
GND
GND
GND
GND
PA0 (ADC0/PCINT0)
PA1 (ADC1/PCINT1)
PA2 (ADC2/PCINT2)
PA3 (ADC3/PCINT3)
PA4 (ADC4/PCINT4)
PA5 (ADC5/PCINT5)
PA6 (ADC6/PCINT6)
PA7 (ADC7/PCINT7)
PC0 (PCINT16/SCL)
PC1 (PCINT17/SDA)
PC2 (PCINT18/TCK)
PC3 (PCINT19/TMS)
PC4 (TDO/PCINT20)
PC5 (TDI/PCINT21)
PC6 (TOSC1/PCINT22)
PC7 (TOSC2/PCINT23)
VCC
VCC
VCC
AVCC
AREF
ATmega324PA-AU
MOSI
MISO
SCK
RXD
TXD
DC 2 ENABLE
DC 1 ENABLE
PWM SV 1
PWM SV 2
PWM DC 2
PWM DC 1
RESET
R16
Res3
10K
VCC
GND
STATUS
S-IN4
S-IN2
S-IN3
S-IN1
VCC
C1
Cap Semi
1uF
GND
STATUS LEDS
POWER
TXD
RXD
STATUS
R3
Res3
1K
R4
Res3
1K
R5
Res3
1K
D1
LED1
D2
LED1
D3
LED1
D4
LED1
GND
GND
GND
GND
STEPPER INTERFACE
P1
S-OUT1
S-OUT2
S-OUT4
S-OUT3
Header 4
DC MOTOR INTERFACE
VCC
VCC
P2
PWM DC 2
DC 2 ENABLE
PWM DC 1
DC 1 ENABLE
Header 4X2
BAT
GND
GND
P3
BAT
VCC
CAM_SIG
CAM_POW
TXD_3.3V
RXD
GND
BAT
Header 5X2
GND
POWER LED STEPDOWN
TXD
R1
Res3
1K
TXD_3.3V
R2
Res3
1K
R6
Res3
1K
GND
POWER LED STEPDOWN
VCC
R7
Res3
1K
POWER
R8
Res3
1K
R9
Res3
1K
GND
P4
MOTOR_2B
MOTOR_1B
MOTOR_2A
MOTOR_1A
Header 2X2
AVP HEADER
P6
VCC
MISO
SCK
RESET
MOSI
Header 3X2
GND
J1
MOTOR_1A
MOTOR_1B
MOTOR_2A
MOTOR_2B
PWM SV 1
PWM SV 2
CAM_POW
CAM_SIG
VCC
BAT
D Connector 15
GND
STEPPER H BRIDGE
VCC
P5
S-IN1
S-OUT1
S-OUT2
S-IN2
BAT
GND
Header 8
P9
VCC
S-IN3
S-OUT3
S-OUT4
S-IN4
GND
VCC
Header 8
VOLTAGE REGULATOR
BAT
VCC
VR1
Vin
Vout
GND
R17
Res3
1R
R18
Res3
1R
R19
Res3
1R
Volt Reg
GND
VR2
Vin
Vout
GND
R20
Res3
1R
R21
Res3
1R
R22
Res3
1R
Volt Reg
GND
C3
Cap Pol2
100pF
C4
Cap Pol2
100pF
C2
Cap Semi
1uF
GND
GND
Title
TEAM 10 - METR4810 - CONTROLLER PCB
Size
A4
Number
P01-01
Revision
B
Date:
23/04/2017
Sheet of
File:
C:\Users\..\METR4810_Schematic.SchDoc
Drawn By:
SMW