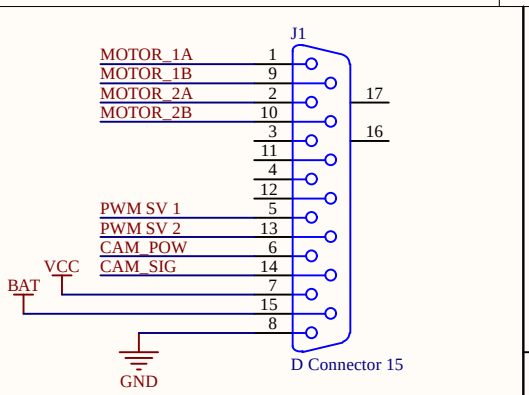

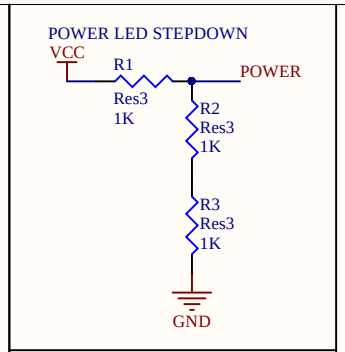

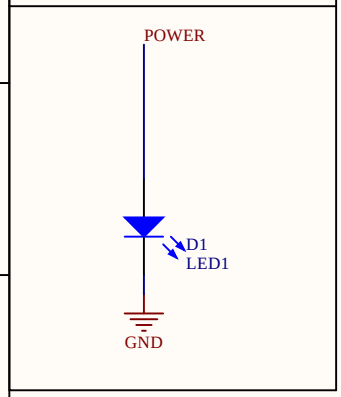

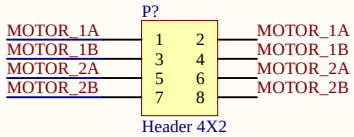

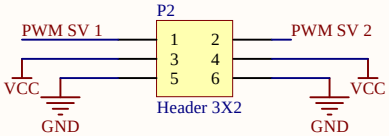

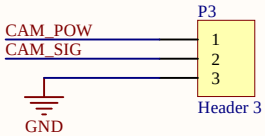

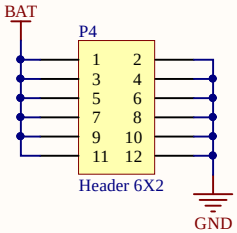

Title		
Size A4	Number	Revision
Date: 23/04/2017		Sheet of
File: C:\Users\..\Distro_schematic.SchDoc		Drawn By: