THIS DRAWING IS UNPUBLISHED. RELEASED FOR PUBLICATION MAY ,1987.
© COPYRIGHT 1977 By – ALL RIGHTS RESERVED.

REVISIONS
変更

P	LTR	DESCRIPTION	DATE	DWN	APVD
	Y3	REVISED (ECR-16-005729)	19DEC2016	T.Q	W.H

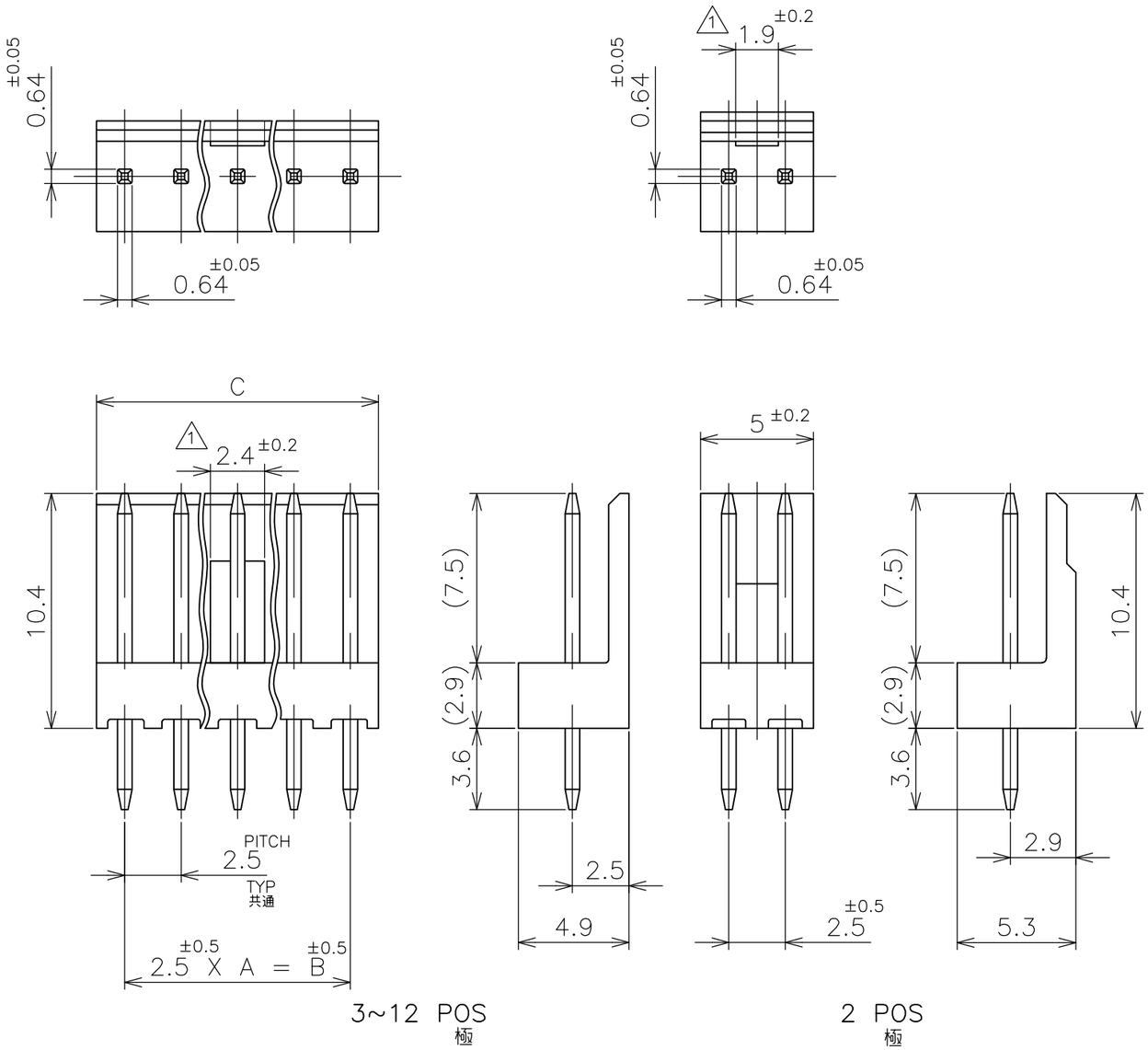

1 LOCKING HOLE IS PLACED ON THE CENTER OF POST HEADER.
2 OBSOLETED 11POS,13POS,15POS PARTS.
OBSOLETED RED AND GREEN COLOR PARTS.

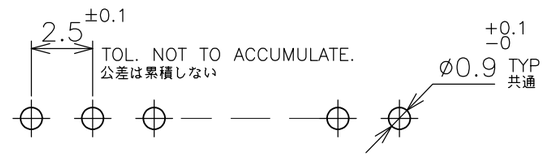

RECOMMENDED BOARD LAYOUT (1.6 THK)
取付基板穴寸法(基板厚1.6t)

	C ±0.2	B ±0.5	A	NO OF POS 極数	RED 赤色 2		GREEN 緑色 2		BLUE 青色		BLACK 黒色		NATURAL 自然色	
					PART NUMBER 型番									
2	~~37.5~~	~~35.0~~	~~14~~	~~15~~	~~9-171825-5~~		~~7-171825-5~~		~~5-171825-5~~		~~3-171825-5~~		~~1-171825-5~~	
2	~~32.5~~	~~30.0~~	~~12~~	~~13~~	~~9-3~~		~~7-3~~		~~5-3~~		~~3-3~~		~~1-3~~	
2	~~27.5~~	~~25.0~~	~~10~~	~~11~~	~~9-1~~		~~7-1~~		~~5-1~~		~~3-1~~		~~1-1~~	
	30.0	27.5	11	12	9-	-2	7-	-2	5-	-2	3-	-2	1-	-2
	25.0	22.5	9	10	9-	-0	7-	-0	5-	-0	3-	-0	1-	-0
	22.5	20.0	8	9	8-	-9	6-	-9	4-	-9	2-	-9		-9
	20.0	17.5	7	8	8-	-8	6-	-8	4-	-8	2-	-8		-8
	17.5	15.0	6	7	8-	-7	6-	-7	4-	-7	2-	-7		-7
	15.0	12.5	5	6	8-	-6	6-	-6	4-	-6	2-	-6		-6
	12.5	10.0	4	5	8-	-5	6-	-5	4-	-5	2-	-5		-5
	10.0	7.5	3	4	8-	-4	6-	-4	4-	-4	2-	-4		-4
	7.5	5.0	2	3	8-	-3	6-	-3	4-	-3	2-	-3		-3
	図示		—//—	2	8-171825-2		6-171825-2		4-171825-2		2-171825-2		171825-2	

THIS DRAWING IS A CONTROLLED DOCUMENT.

DIMENSIONS: 単位: 粍 mm

TOLERANCES UNLESS OTHERWISE SPECIFIED: 一般公差
0 PLC ± 0.3
1 PLC ± 0.3
2 PLC ± 0.3
3 PLC ± 0.3
4 PLC ± 0.3
ANGLES ±

MATERIAL 材料 HSG : 66NYLON UL94V-0
POST: BRASS

FINISH 仕上
TIN-PLATE 0.8um. MIN. ALL OVER
NICKEL 0.5um MIN. UNDERPLATED

DWN T.DOI 14MAY77
CHK H.TAGUCHI 14MAY77
APVD H.TAGUCHI 14MAY77
PRODUCT SPEC 製品規格
APPLICATION SPEC 取付適用規格
WEIGHT 0.000000

TE Connectivity

NAME 名称
POST HEADER ASSY (VERTICAL)
AMP EI SERIES CONNECTOR

SIZE	CAGE CODE	DRAWING NO 番号	RESTRICTED TO
A3	00779	C-171825	—

CUSTOMER DRAWING
SCALE 尺度 4:1 SHEET 1 OF 1 REV Y3