BUCK BOOST CONVERTER 5-36V IN 12V 3A OUT

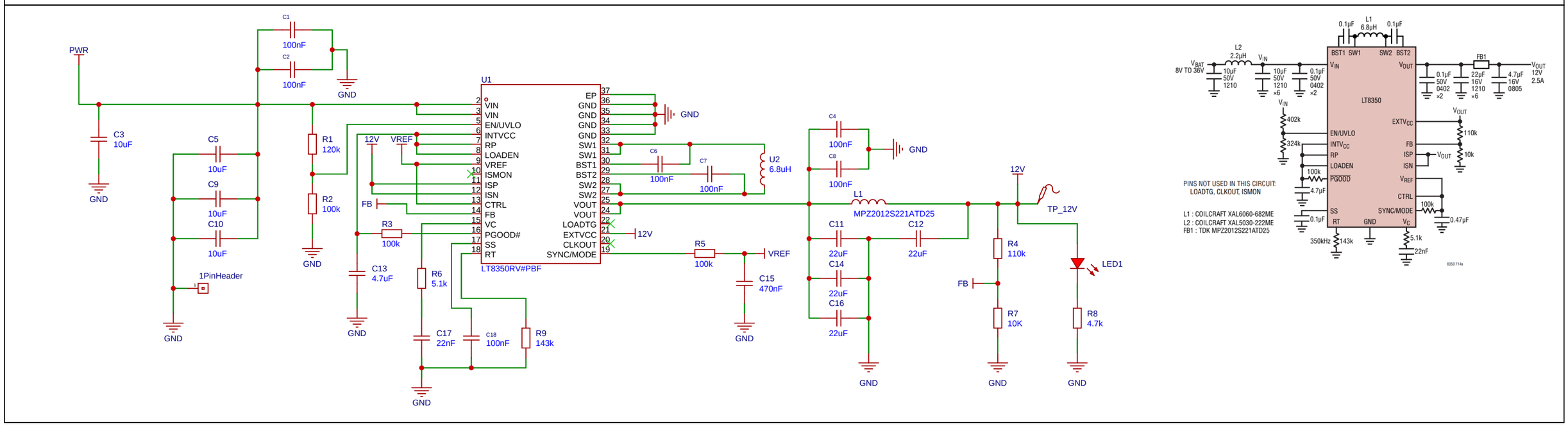

POWER CONN

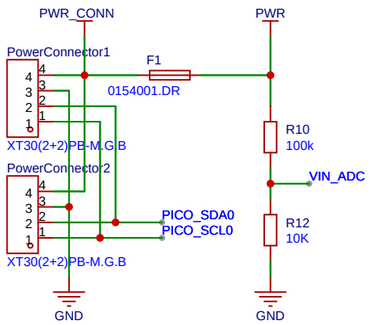

BUCK CONVERTER 5V - LDO 3V3

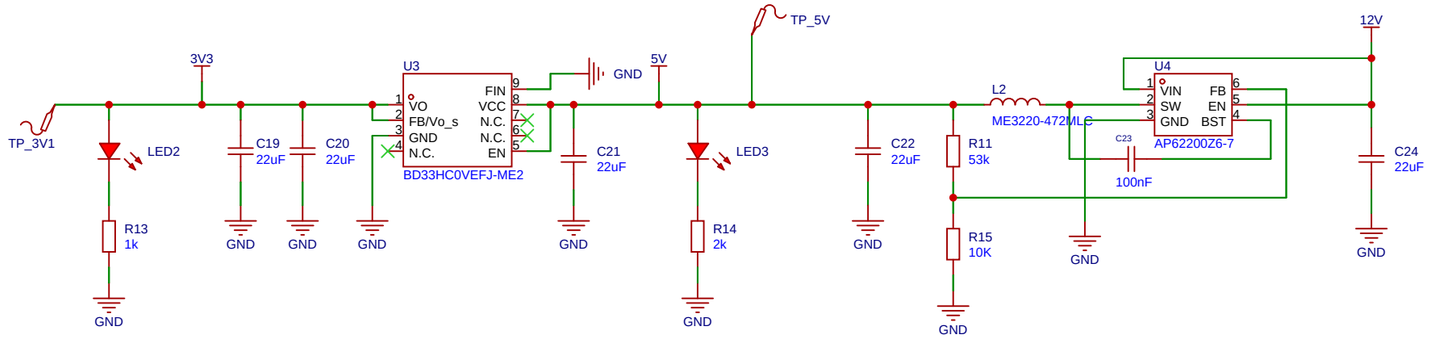

Schematic	Schematic1	Create at	2026-05-02
		Update at	2026-05-02
Board	Board1	Page	Power Electroncis
Drawn		Dual_Motor_Driver	
Reviewed			
		Version	Size	Page 1 Total 3
EasyEDA		V1.0	A4	

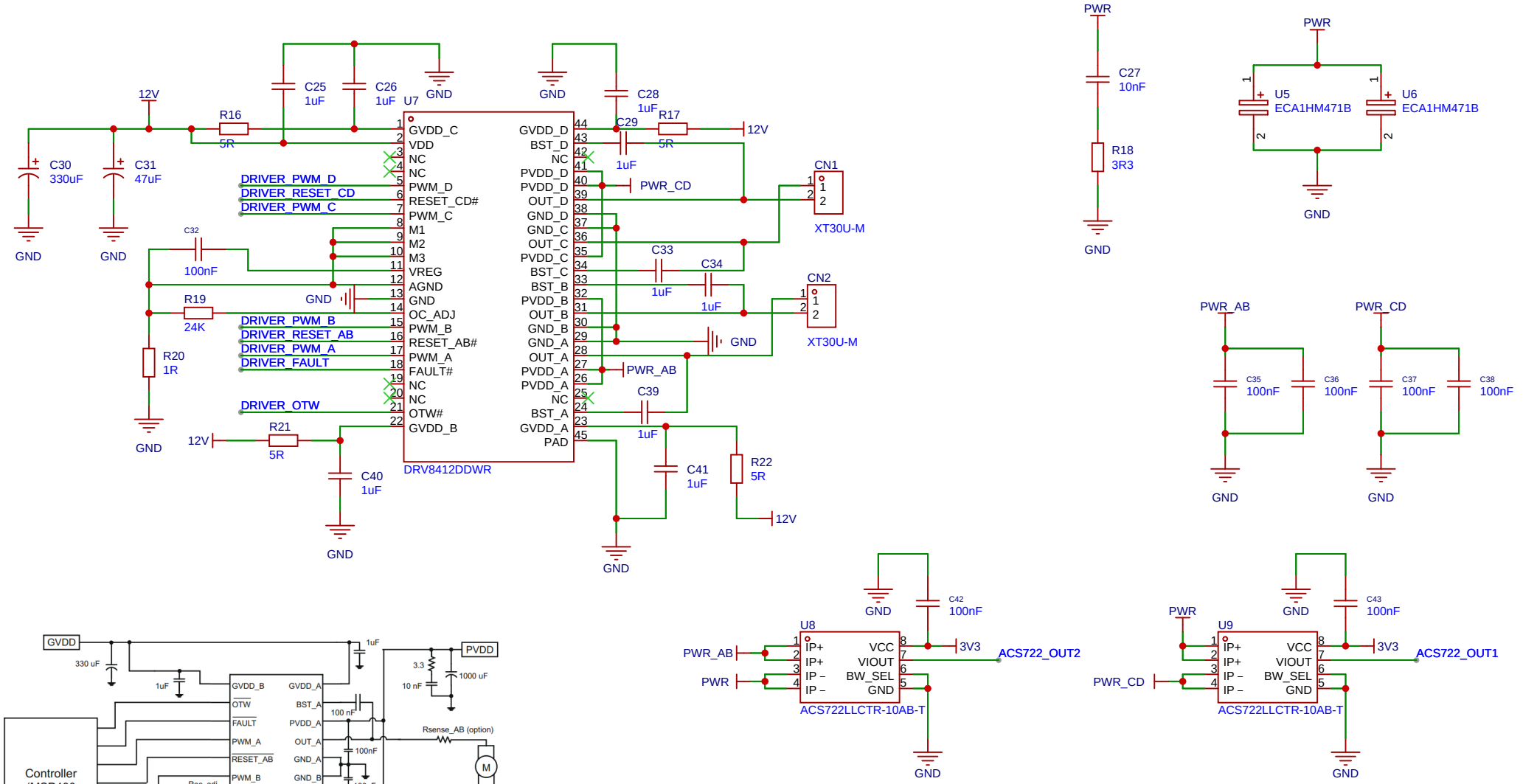

Schematic	Schematic1	Create at	2026-05-02
		Update at	2026-05-02
Board	Board1	Page	Motor Driver IC
Drawn		Dual_Motor_Driver	
Reviewed			
		Version	Size	Page 2 Total 3
EasyEDA		V1.0	A4	EasyEDA.com

I2C Connectors and Pull Up Circuit

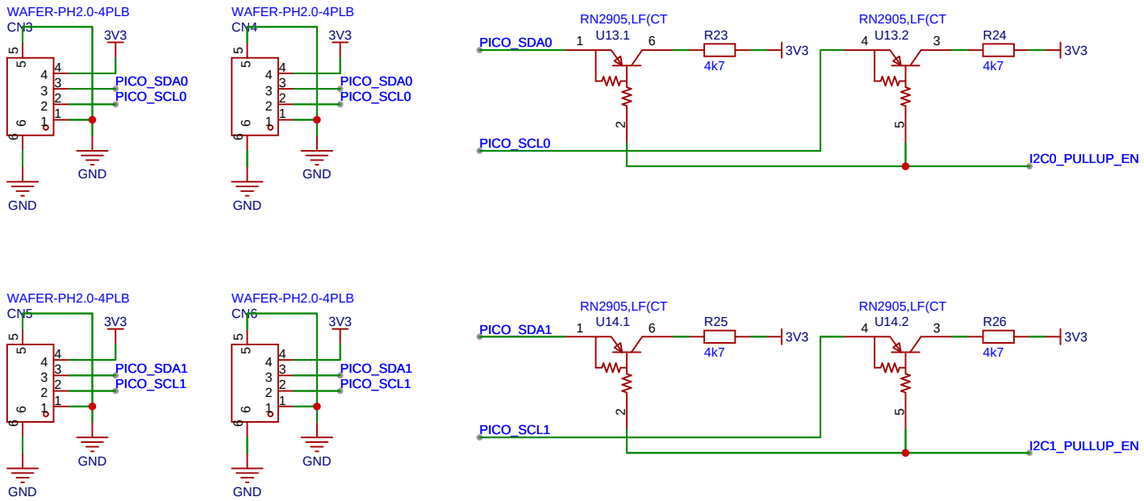

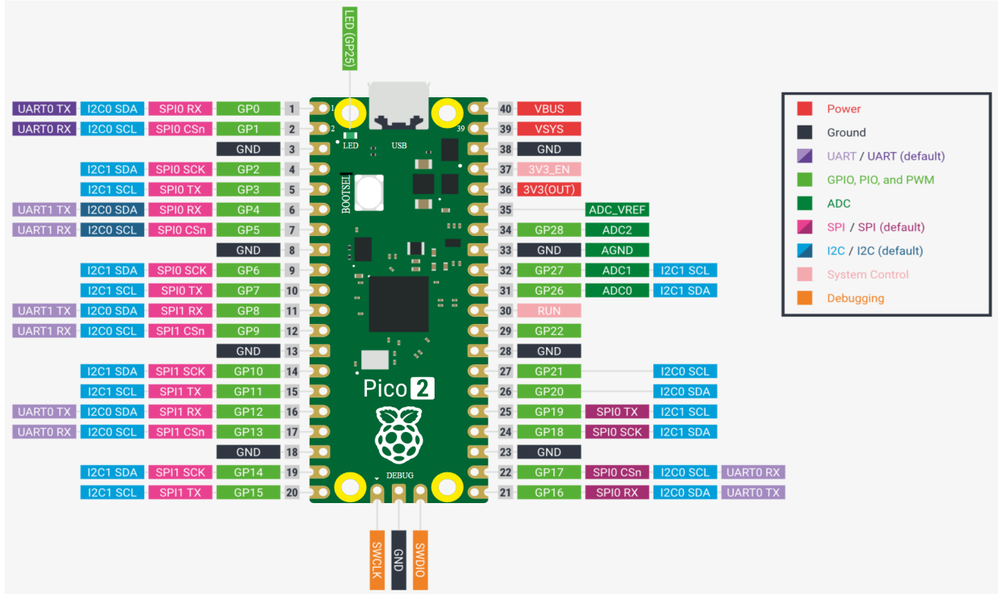

Debug Connector

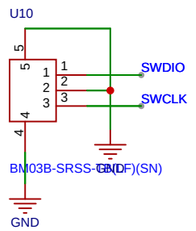

SPI Connector

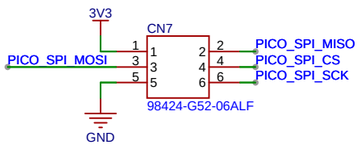

Mounting Holes

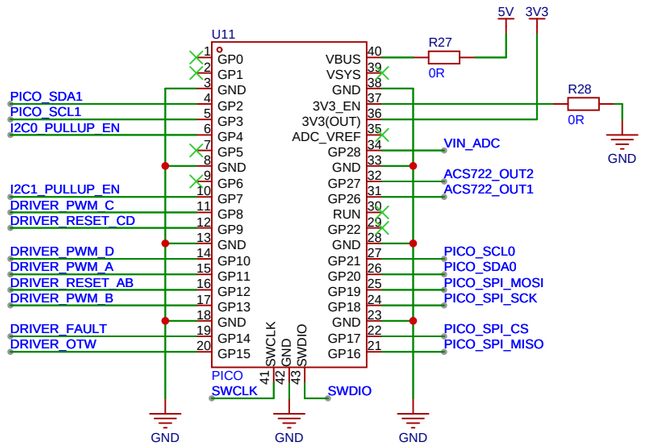

RGB LED

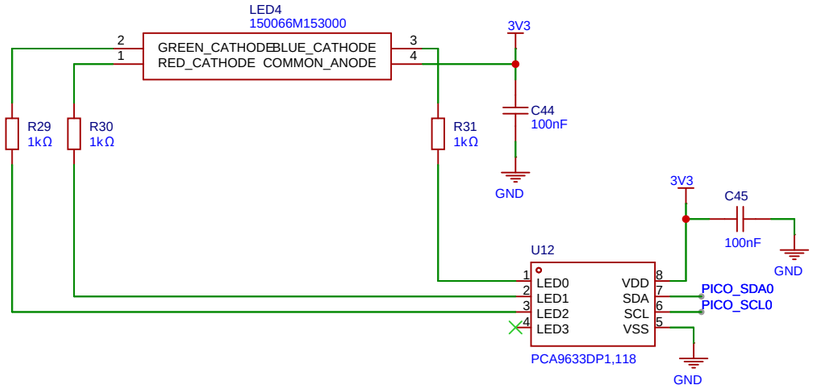

Schematic	Schematic1	Create at	2026-05-02
		Update at	2026-05-02
Board	Board1	Page	RP2350
Drawn	Dual_Motor_Driver		
Reviewed			
	Version	Size	Page 3 Total 3
EasyEDA	V1.0	A4	EasyEDA.com