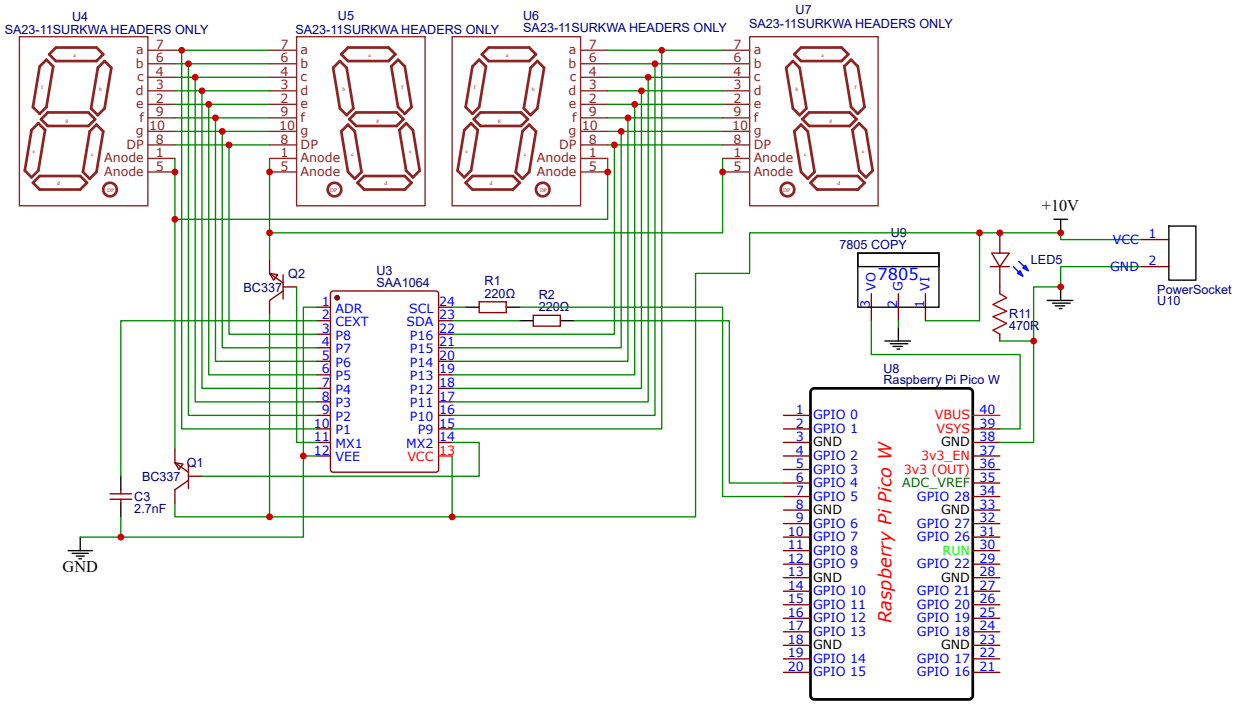

TITLE: Quick Start to EasyEDA	REV: 1.0
Date: 2018-03-29	Sheet: 2/2
EasyEDA V5.3.14	Drawn By: EasyEDA