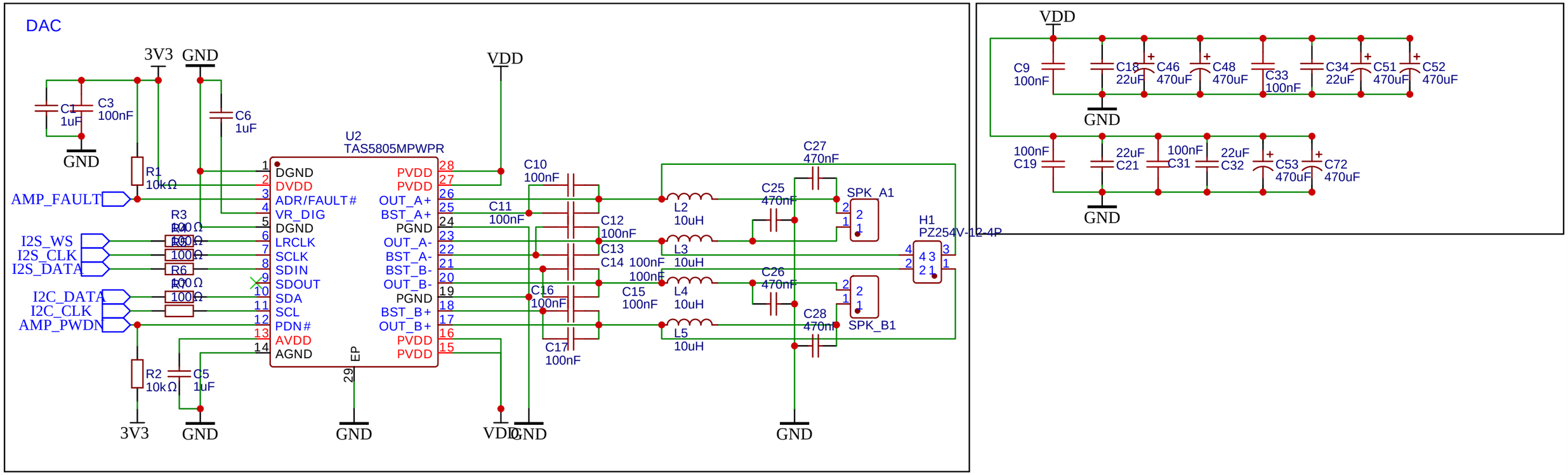

TITLE: Louder Raspberry		REV: B
嘉立创EDA	Company: Sonocotta	Sheet: 1/3
	Date: 2024-03-24	Drawn By: andriy@sonocotta.com

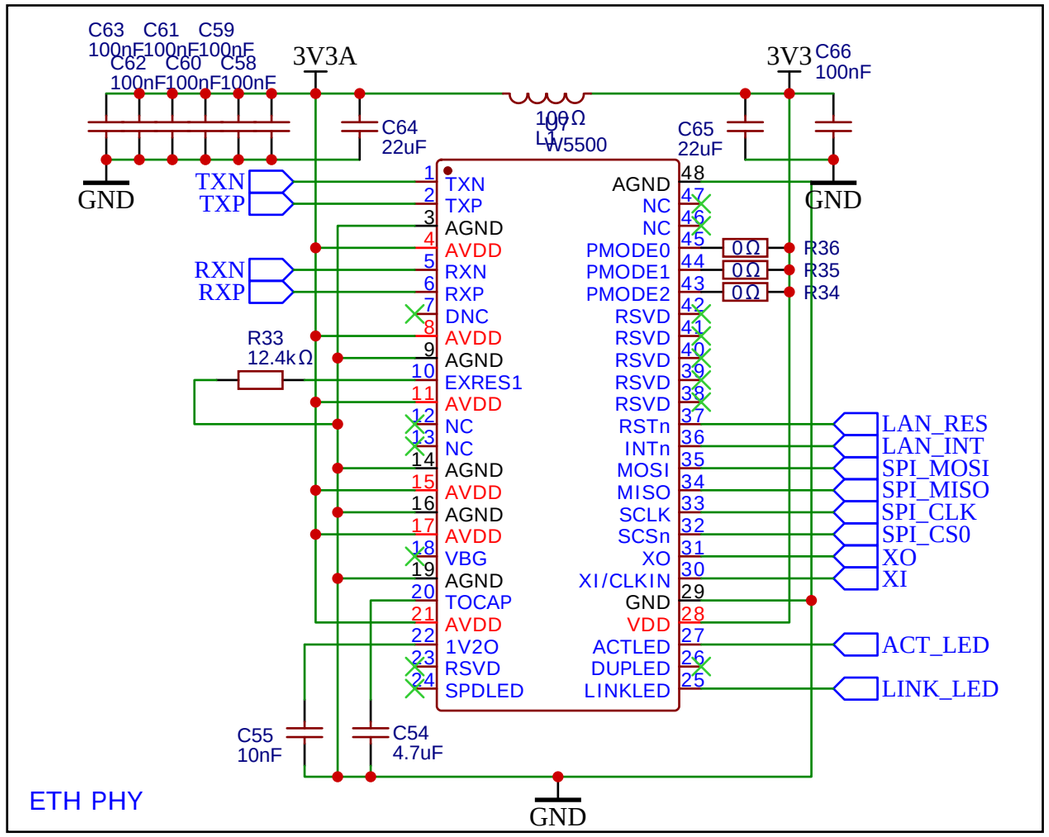

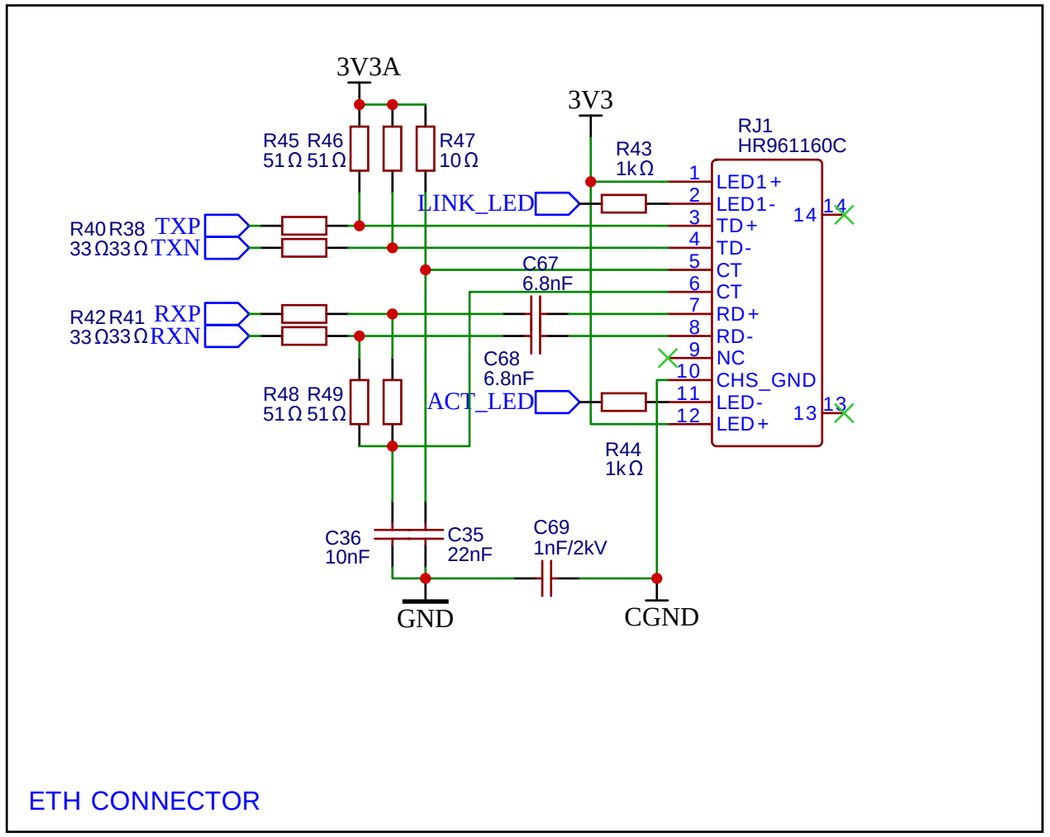

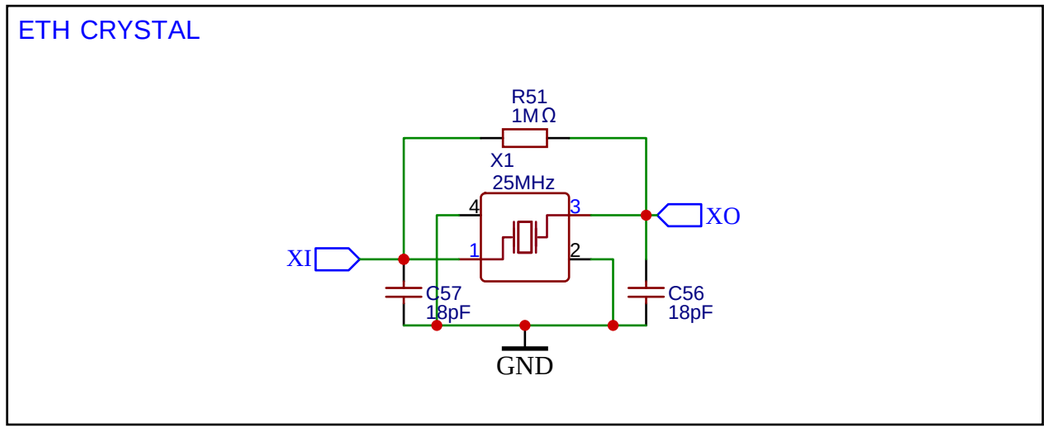

TITLE: Louder Raspberry		REV: B
EasyEDA	Company: Sonocotta	Sheet: 3/3
	Date: 2024-03-24 Drawn By: andriy@sonocotta.com	

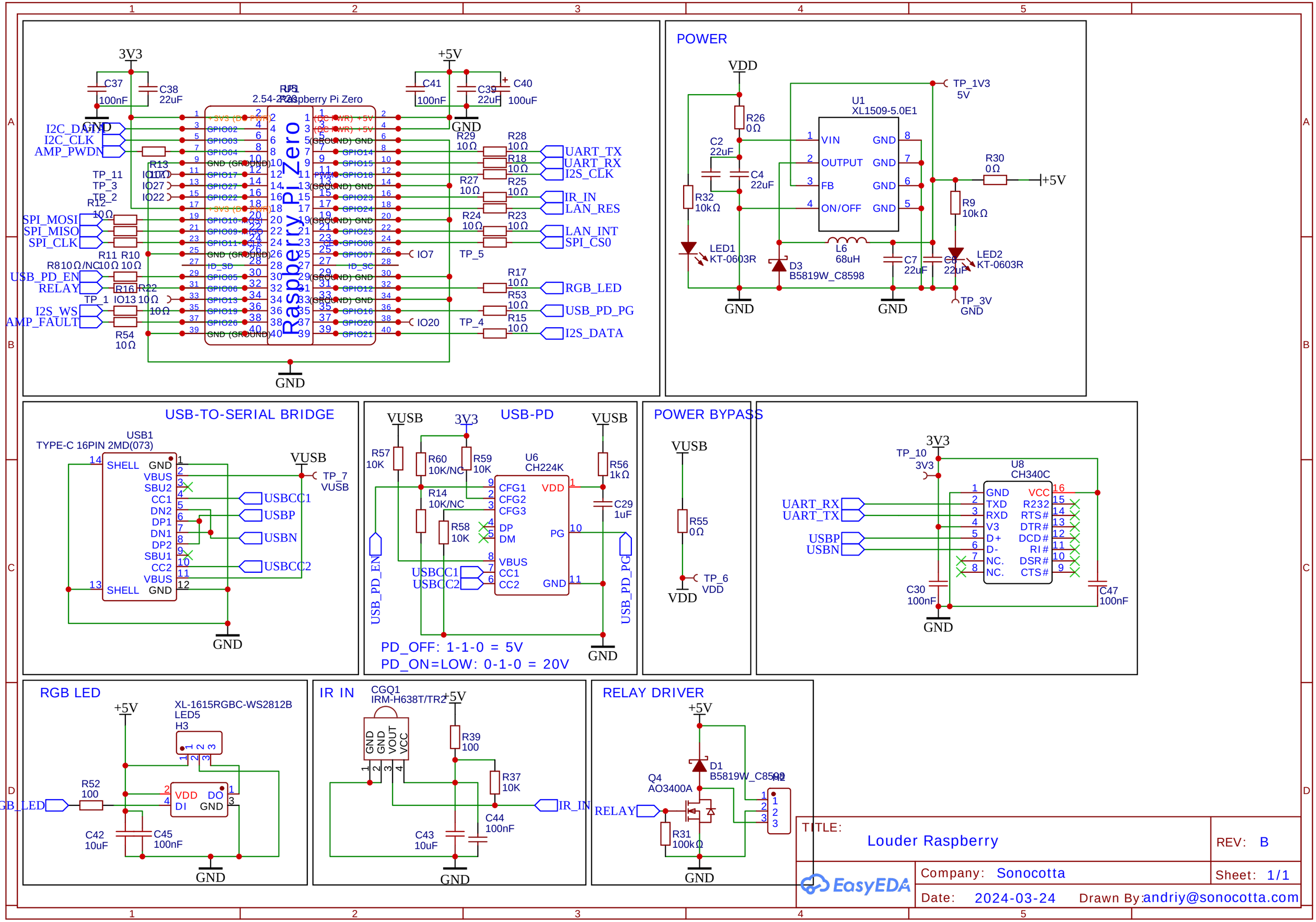
Raspberry Pi Zero
2.54-2*20
3V3
+5V
GND
C37 100nF
C38 22uF
C41 100nF
C39 22uF
C40 100uF
I2C_DATA
I2C_CLK
AMP_PWDN
R13 10Ω
TP_11
TP_3
TP_2
IO17
IO27
IO22
R12 10Ω
SPI_MOSI
SPI_MISO
SPI_CLK
R11 10Ω
R10 10Ω
R8 10Ω/NC
USB_PD_EN
RELAY
R16 10Ω
R22 10Ω
TP_1
IO13
I2S_WS
AMP_FAULT
R54 10Ω
R29 10Ω
R28 10Ω
R18 10Ω
UART_TX
UART_RX
I2S_CLK
R27 10Ω
R25 10Ω
IR_IN
LAN_RES
R24 10Ω
R23 10Ω
LAN_INT
SPI_CS0
IO7
TP_5
R17 10Ω
RGB_LED
R53 10Ω
USB_PD_PG
IO20
TP_4
R15 10Ω
I2S_DATA
POWER
VDD
R26 0Ω
C2 22uF
C4 22uF
R32 10kΩ
LED1 KT-0603R
U1 XL1509-5.0E1
VIN
OUTPUT
FB
ON/OFF
GND
TP_1V3 5V
R30 0Ω
+5V
R9 10kΩ
L6 68uH
D3 B5819W_C8598
C7 22uF
C8 22uF
LED2 KT-0603R
TP_3V
USB-TO-SERIAL BRIDGE
USB1
TYPE-C 16PIN 2MD(073)
SHELL
GND
VBUS
SBU2
CC1
DN2
DP1
DN1
DP2
SBU1
CC2
VUSB
TP_7 VUSB
USBCC1
USBP
USBN
USBCC2
USB-PD
U6 CH224K
CFG1
CFG2
CFG3
DP
DM
PG
R57 10K
R60 10K/NC
R59 10K
R14 10K/NC
R58 10K
R56 1kΩ
C29 1uF
USB_PD_EN
USB_PD_PG
PD_OFF: 1-1-0 = 5V
PD_ON=LOW: 0-1-0 = 20V
POWER BYPASS
R55 0Ω
TP_6 VDD
3V3
TP_10
U8 CH340C
UART_RX
UART_TX
USBP
USBN
TXD
RXD
V3
D+
D-
NC.
VCC
R232
RTS#
DTR#
DCD#
RI#
DSR#
CTS#
C30 100nF
C47 100nF
RGB LED
XL-1615RGBC-WS2812B
LED5
H3
R52 100
VDD
DI
DO
C42 10uF
C45 100nF
IR IN
CGQ1
IRM-H638T/TR2
GND
VOUT
VCC
R39 100
R37 10K
C44 100nF
C43 10uF
RELAY DRIVER
D1 B5819W_C8598
Q4 AO3400A
R31 100kΩ
TITLE:
Louder Raspberry
REV: B
Company: Sonocotta
Sheet: 1/1
Date: 2024-03-24
Drawn By: andriy@sonocotta.com
EasyEDA