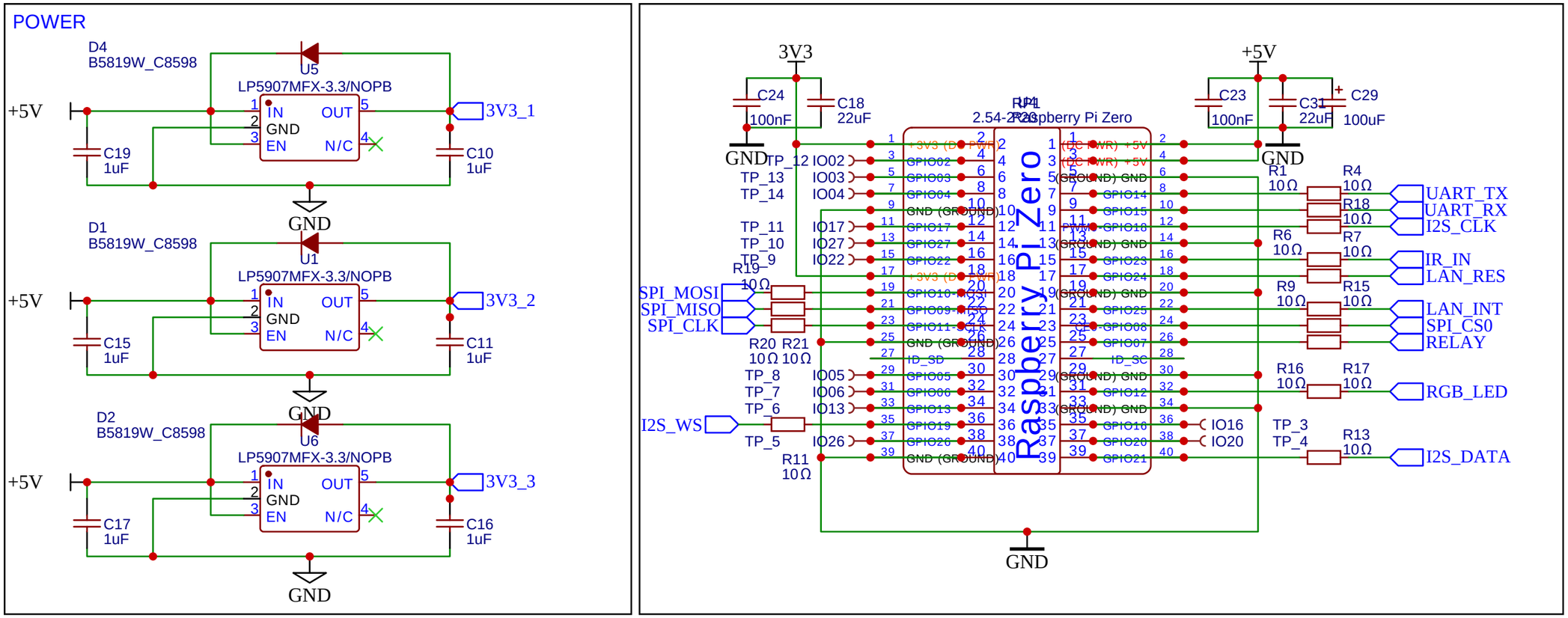

TITLE: HiFi Raspberry	REV: A
Company: Sonocotta	Sheet: 1/2
Date: 2024-02-20	Drawn By: andriy@sonocotta.com

EasyEDA

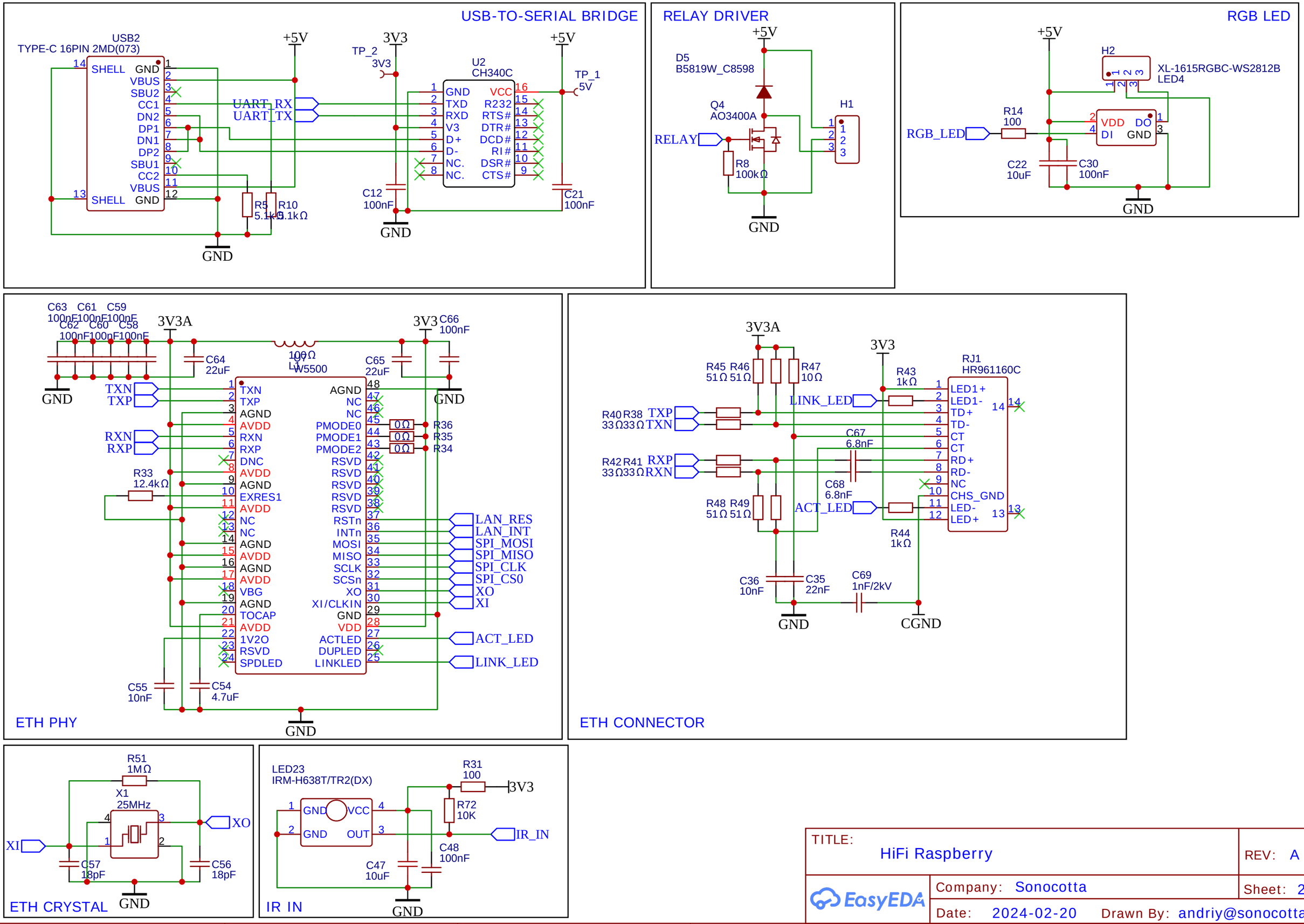

TITLE: HiFi Raspberry	REV: A
EasyEDA Company: Sonocotta	Sheet: 2/2
Date: 2024-02-20 Drawn By: andriy@sonocotta.com	