POWER

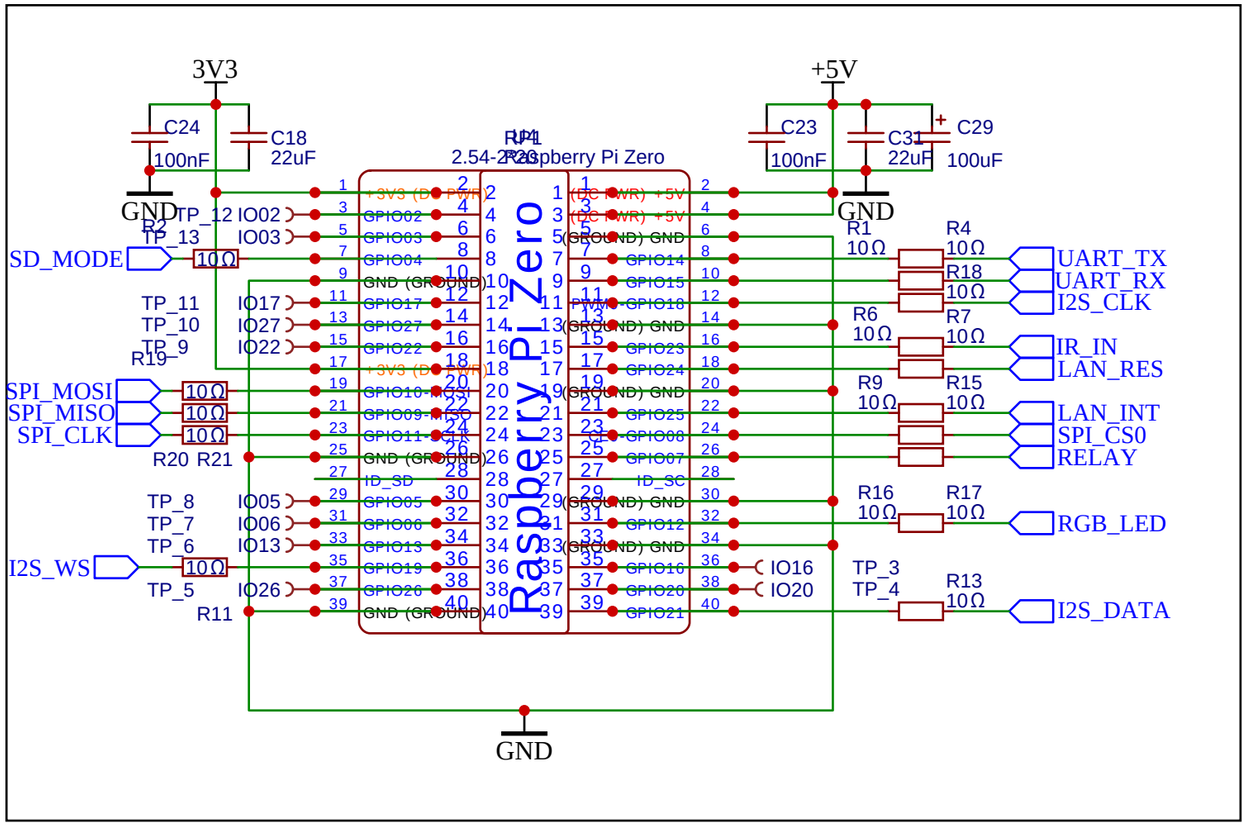

RIGHT CHANNEL

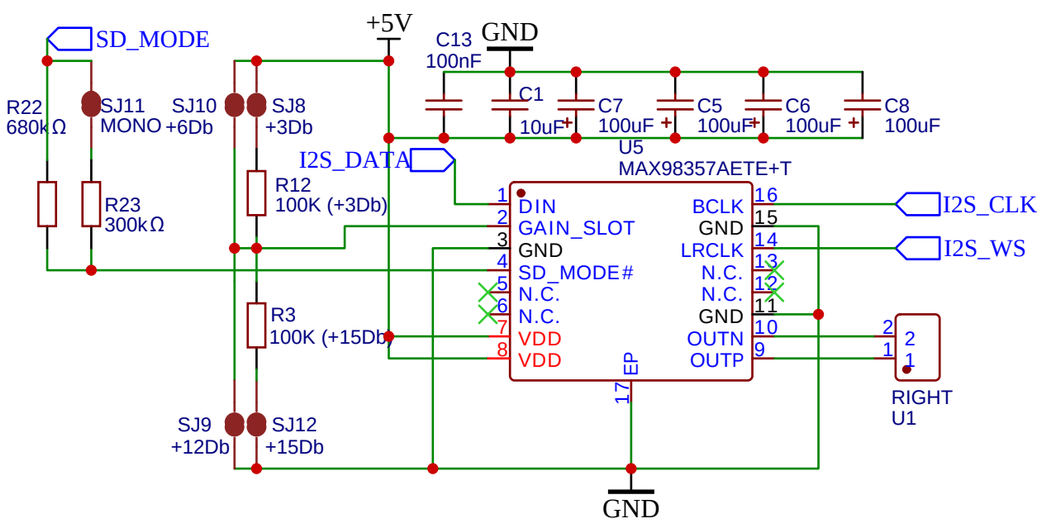

LEFT CHANNEL

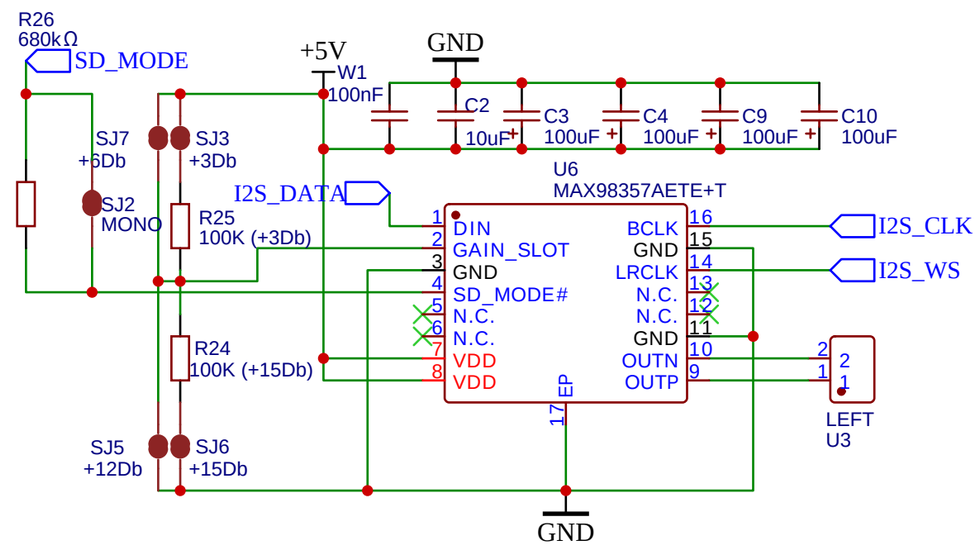

TITLE: Loud Raspberry		REV: A
EasyEDA	Company: Sonocotta	Sheet: 1/2
	Date: 2024-04-30	Drawn By: andriy@sonocotta.com

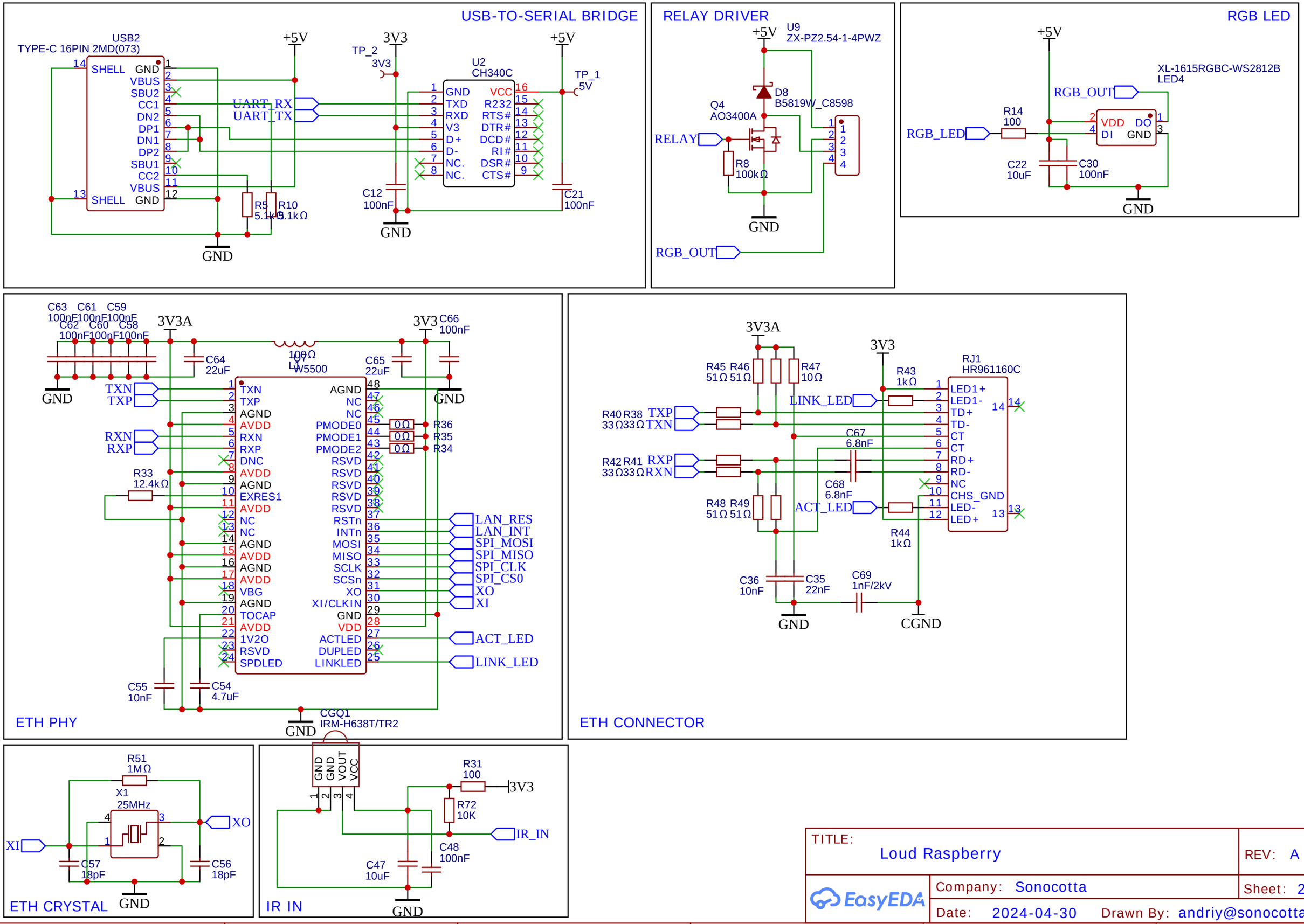

TITLE: Loud Raspberry

REV: A

Company: Sonocotta

Sheet: 2/2

Date: 2024-04-30

Drawn By: andriy@sonocotta.com