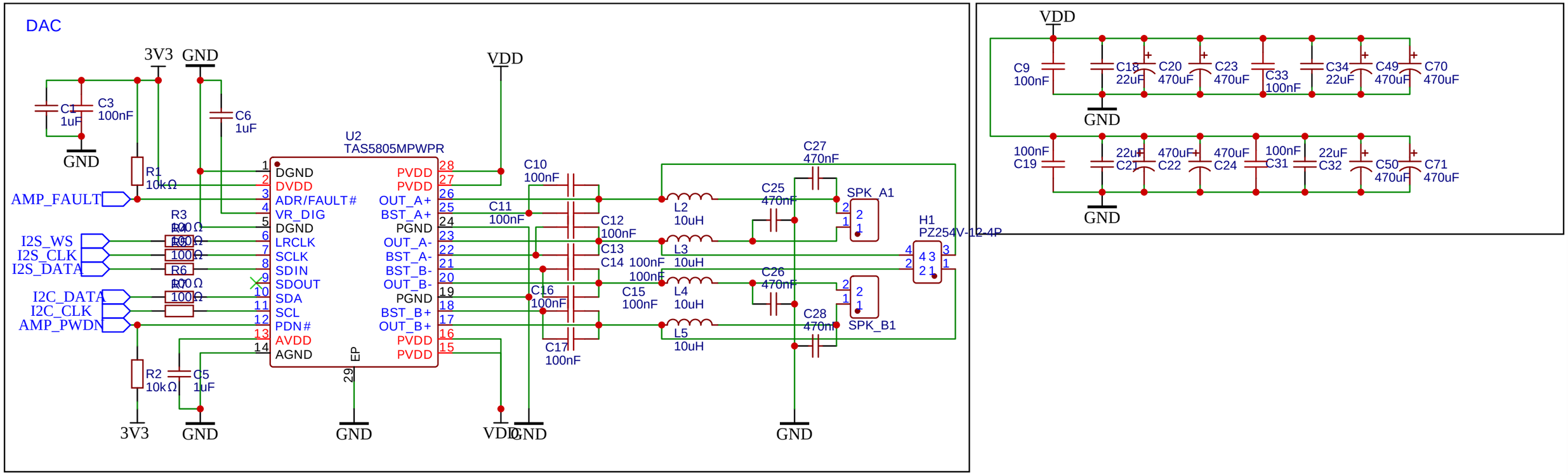

TITLE: Louder Raspberry		REV: A
嘉立创EDA	Company: Sonocotta	Sheet: 1/3
	Date: 2024-03-24 Drawn By: andriy@sonocotta.com	

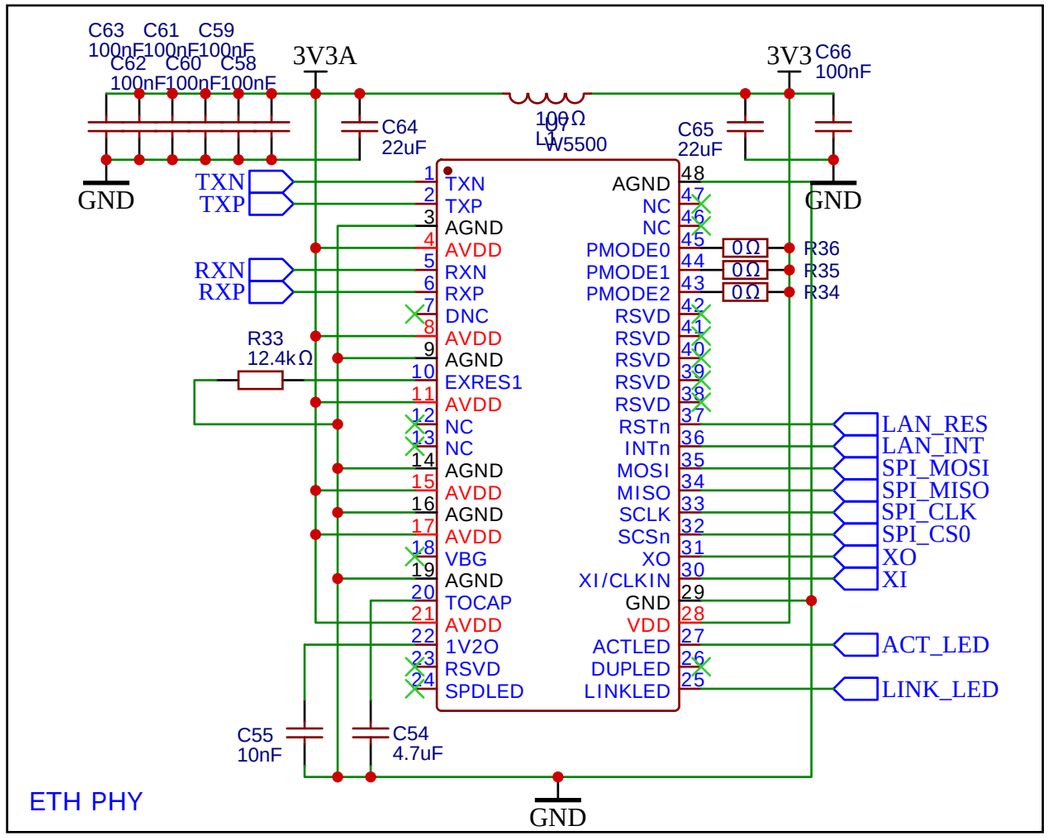

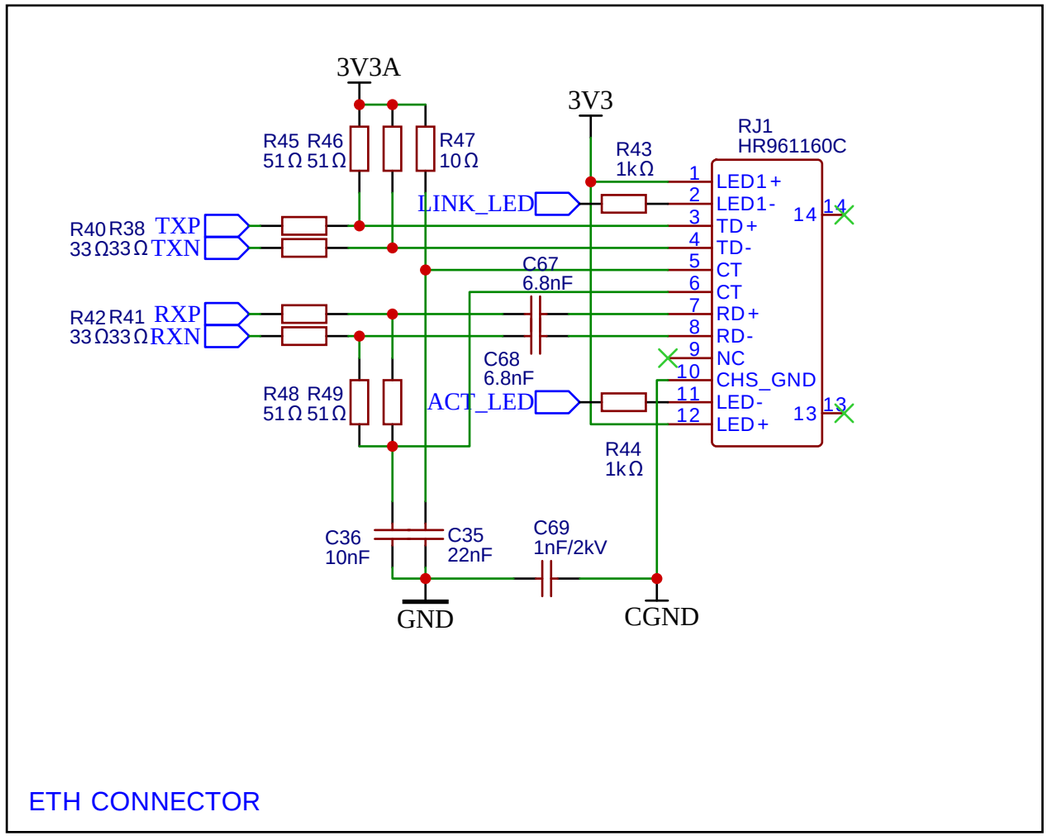

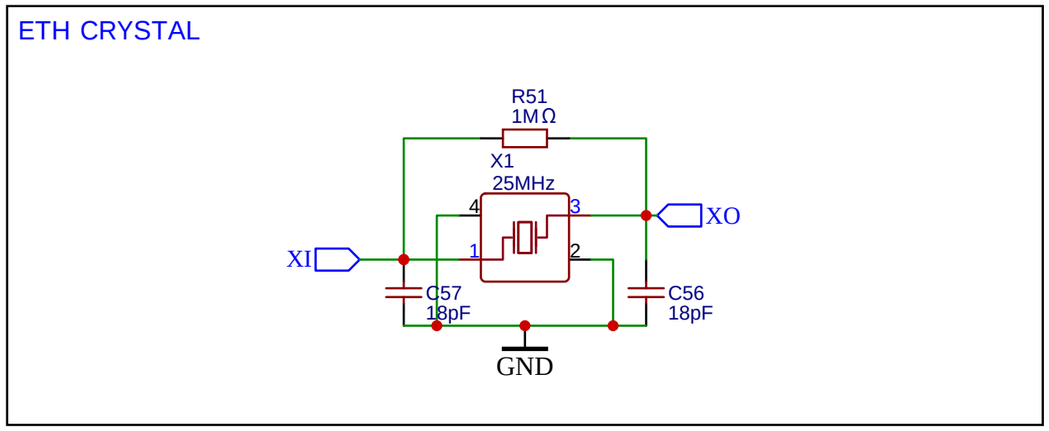

TITLE: Louder Raspberry		REV: A
EasyEDA	Company: Sonocotta	Sheet: 3/3
	Date: 2024-03-24 Drawn By: andriy@sonocotta.com	

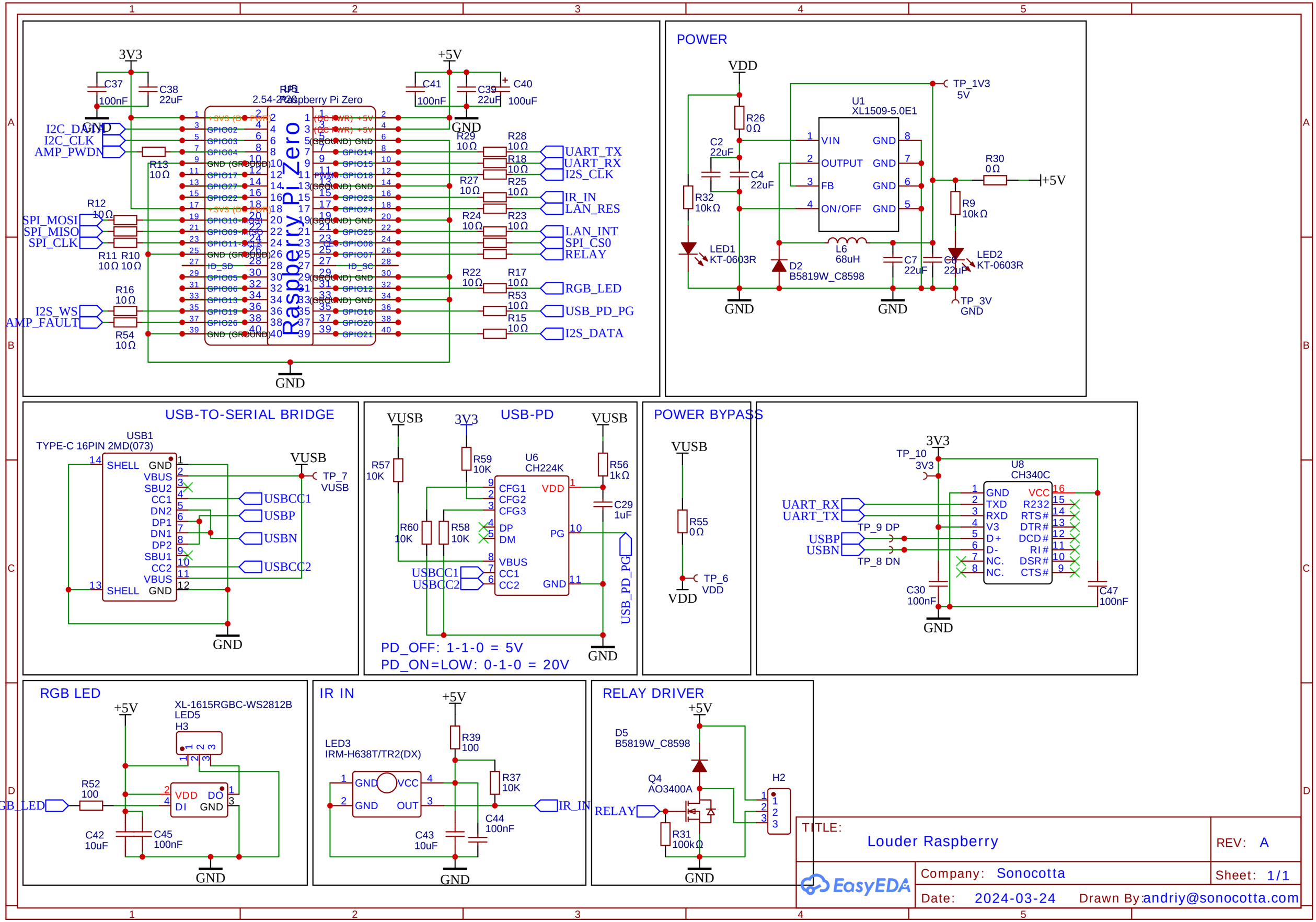
Raspberry Pi Zero
2.54-2*20
3V3
+5V
GND
C37 100nF
C38 22uF
C41 100nF
C39 22uF
C40 100uF
I2C_DATA
I2C_CLK
AMP_PWDN
SPI_MOSI
SPI_MISO
SPI_CLK
I2S_WS
AMP_FAULT
R13 10Ω
R12 10Ω
R11 10Ω
R10 10Ω
R16 10Ω
R54 10Ω
R29 10Ω
R28 10Ω
R18 10Ω
R27 10Ω
R25 10Ω
R24 10Ω
R23 10Ω
R22 10Ω
R17 10Ω
R53 10Ω
R15 10Ω
UART_TX
UART_RX
I2S_CLK
IR_IN
LAN_RES
LAN_INT
SPI_CS0
RELAY
RGB_LED
USB_PD_PG
I2S_DATA
POWER
VDD
R26 0Ω
C2 22uF
C4 22uF
R32 10kΩ
U1 XL1509-5.0E1
VIN
OUTPUT
FB
ON/OFF
GND
TP_1V3 5V
R30 0Ω
+5V
R9 10kΩ
LED1 KT-0603R
D2 B5819W_C8598
L6 68uH
C7 22uF
C8 22uF
LED2 KT-0603R
TP_3V GND
USB-TO-SERIAL BRIDGE
USB1 TYPE-C 16PIN 2MD(073)
SHELL
GND
VBUS
SBU2
CC1
DN2
DP1
DN1
DP2
SBU1
CC2
TP_7 VUSB
USBCC1
USBP
USBN
USBCC2
USB-PD
VUSB
R57 10K
R59 10K
U6 CH224K
CFG1
CFG2
CFG3
DP
DM
VBUS
CC1
CC2
VDD
PG
R56 1kΩ
C29 1uF
R60 10K
R58 10K
USB_PD_PG
PD_OFF: 1-1-0 = 5V
PD_ON=LOW: 0-1-0 = 20V
POWER BYPASS
R55 0Ω
TP_6 VDD
TP_10 3V3
U8 CH340C
GND
TXD
RXD
V3
D+
D-
NC.
VCC
R232
RTS#
DTR#
DCD#
RI#
DSR#
CTS#
TP_9 DP
TP_8 DN
C30 100nF
C47 100nF
RGB LED
XL-1615RGBC-WS2812B LED5
H3
R52 100
VDD
DI
DO
C42 10uF
C45 100nF
IR IN
LED3 IRM-H638T/TR2(DX)
R39 100
R37 10K
C44 100nF
C43 10uF
RELAY DRIVER
D5 B5819W_C8598
Q4 AO3400A
H2
R31 100kΩ
TITLE:
Louder Raspberry
REV: A
Company: Sonocotta
Sheet: 1/1
Date: 2024-03-24
Drawn By: andriy@sonocotta.com
EasyEDA