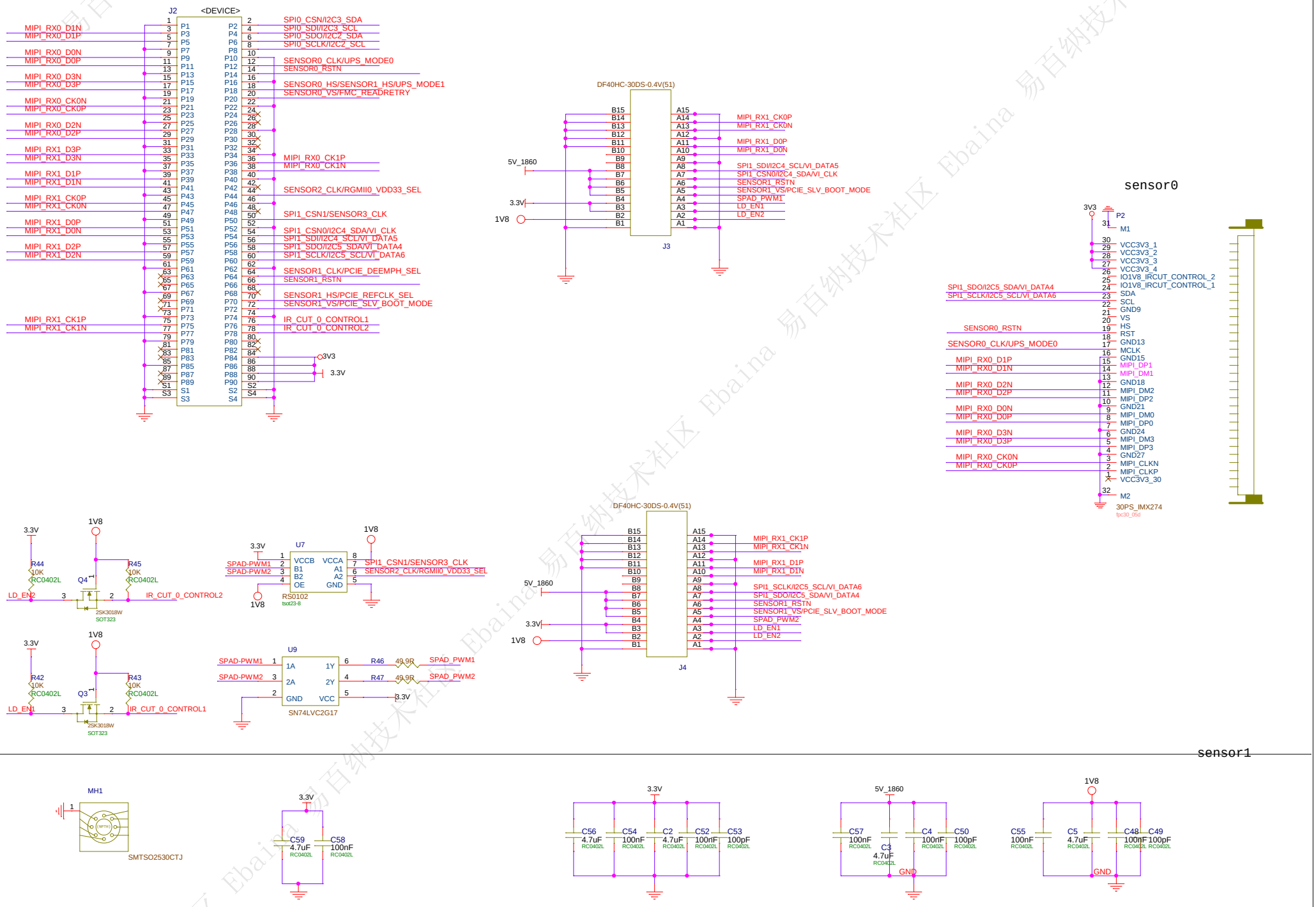
J2
<DEVICE>
MIPI_RX0_D1N
MIPI_RX0_D1P
MIPI_RX0_D0N
MIPI_RX0_D0P
MIPI_RX0_D3N
MIPI_RX0_D3P
MIPI_RX0_CK0N
MIPI_RX0_CK0P
MIPI_RX0_D2N
MIPI_RX0_D2P
MIPI_RX1_D3P
MIPI_RX1_D3N
MIPI_RX1_D1P
MIPI_RX1_D1N
MIPI_RX1_CK0P
MIPI_RX1_CK0N
MIPI_RX1_D0P
MIPI_RX1_D0N
MIPI_RX1_D2P
MIPI_RX1_D2N
MIPI_RX1_CK1P
MIPI_RX1_CK1N
SPI0_CSN/I2C3_SDA
SPI0_SDI/I2C3_SCL
SPI0_SDO/I2C2_SDA
SPI0_SCLK/I2C2_SCL
SENSOR0_CLK/UPS_MODE0
SENSOR0_RSTN
SENSOR0_HS/SENSOR1_HS/UPS_MODE1
SENSOR0_VS/FMC_READRETRY
MIPI_RX0_CK1P
MIPI_RX0_CK1N
SENSOR2_CLK/RGMII0_VDD33_SEL
SPI1_CSN1/SENSOR3_CLK
SPI1_CSN0/I2C4_SDA/VI_CLK
SPI1_SDI/I2C4_SCL/VI_DATA5
SPI1_SDO/I2C5_SDA/VI_DATA4
SPI1_SCLK/I2C5_SCL/VI_DATA6
SENSOR1_CLK/PCIE_DEEMPH_SEL
SENSOR1_RSTN
SENSOR1_HS/PCIE_REFCLK_SEL
SENSOR1_VS/PCIE_SLV_BOOT_MODE
IR_CUT_0_CONTROL1
IR_CUT_0_CONTROL2
3V3
3.3V
DF40HC-30DS-0.4V(51)
J3
5V_1860
3.3V
1V8
MIPI_RX1_CK0P
MIPI_RX1_CK0N
MIPI_RX1_D0P
MIPI_RX1_D0N
SPI1_SDI/I2C4_SCL/VI_DATA5
SPI1_CSN0/I2C4_SDA/VI_CLK
SENSOR1_RSTN
SENSOR1_VS/PCIE_SLV_BOOT_MODE
SPAD_PWM1
LD_EN1
LD_EN2
sensor0
3V3
P2
M1
VCC3V3_1
VCC3V3_2
VCC3V3_3
VCC3V3_4
IO1V8_IRCUT_CONTROL_2
IO1V8_IRCUT_CONTROL_1
SPI1_SDO/I2C5_SDA/VI_DATA4
SPI1_SCLK/I2C5_SCL/VI_DATA6
SDA
SCL
GND9
VS
HS
SENSOR0_RSTN
RST
GND13
SENSOR0_CLK/UPS_MODE0
MCLK
GND15
MIPI_RX0_D1P
MIPI_RX0_D1N
MIPI_DP1
MIPI_DM1
GND18
MIPI_RX0_D2N
MIPI_RX0_D2P
MIPI_DM2
MIPI_DP2
GND21
MIPI_RX0_D0N
MIPI_RX0_D0P
MIPI_DM0
MIPI_DP0
GND24
MIPI_RX0_D3N
MIPI_RX0_D3P
MIPI_DM3
MIPI_DP3
GND27
MIPI_RX0_CK0N
MIPI_RX0_CK0P
MIPI_CLKN
MIPI_CLKP
VCC3V3_30
M2
30PS_IMX274
3.3V
1V8
R44
10K
RC0402L
R45
10K
RC0402L
Q4
LD_EN2
IR_CUT_0_CONTROL2
2SK3018W
SOT323
U7
SPAD-PWM1
SPAD-PWM2
VCCB
B1
B2
OE
VCCA
A1
A2
GND
SPI1_CSN1/SENSOR3_CLK
SENSOR2_CLK/RGMII0_VDD33_SEL
RS0102
tsot23-8
DF40HC-30DS-0.4V(51)
J4
MIPI_RX1_CK1P
MIPI_RX1_CK1N
MIPI_RX1_D1P
MIPI_RX1_D1N
SPI1_SCLK/I2C5_SCL/VI_DATA6
SPI1_SDO/I2C5_SDA/VI_DATA4
SENSOR1_RSTN
SENSOR1_VS/PCIE_SLV_BOOT_MODE
SPAD_PWM2
LD_EN1
LD_EN2
R42
10K
RC0402L
R43
10K
RC0402L
Q3
LD_EN1
IR_CUT_0_CONTROL1
U9
1A
2A
GND
1Y
2Y
VCC
R46
49.9R
R47
49.9R
SPAD_PWM1
SPAD_PWM2
SN74LVC2G17
sensor1
MH1
SMTSO2530CTJ
C59
4.7uF
RC0402L
C58
100nF
RC0402L
C56
4.7uF
C54
100nF
C2
4.7uF
C52
100nF
C53
100pF
C57
100nF
C3
4.7uF
C4
100nF
C50
100pF
GND
C55
100nF
C5
4.7uF
C48
100nF
C49
100pF

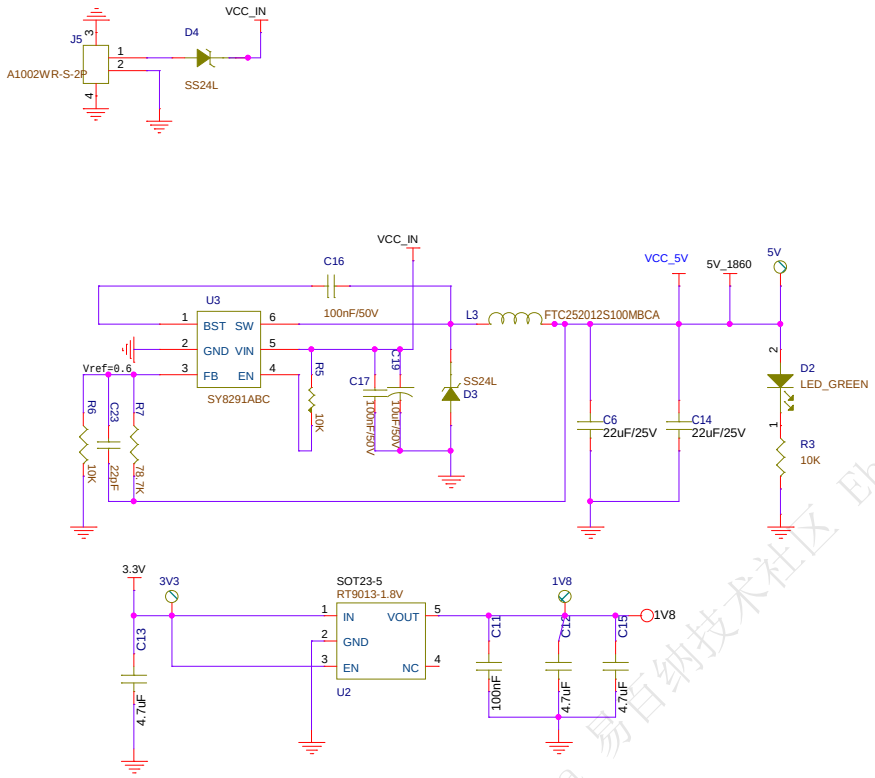

易百纳技术社区 Ebaina