CITY OF CEDAR PARK

CEDAR PARK CITY COUNCIL	
MAYOR:	MATT POWELL
PLACE ONE:	STEPHEN THOMAS
PLACE TWO:	CORBIN VAN ARSDALE
PLACE THREE:	LYLE GRIMES
PLACE FOUR:	LOWELL MOORE
PLACE FIVE:	JON LUX
PLACE SIX:	KRISTYNE BOLLIER

CEDAR PARK

WILLIAMSON COUNTY 1848

ALL RESPONSIBILITY FOR THE ADEQUACY OF THESE PLANS REMAINS WITH THE ENGINEER WHO PREPARED THEM. IN REVIEWING THESE PLANS, THE CITY OF CEDAR PARK MUST RELY ON THE ADEQUACY OF THE WORK OF THE DESIGN ENGINEER.

100% SUBMITTAL

ANDERSON MILL ROAD

GASPAR BEND TO WHITESTONE BLVD
PHASE I ROADWAY IMPROVEMENTS

AS-BUILTS

Binkley & Barfield, Inc
consulting engineers
Texas Registration Number F-257

SUBMITTED FOR APPROVAL BY:

DENNIS R. ECKER, P.E.
PROJECT ENGINEERING MANAGER

10/6/2016
DATE

STATE OF TEXAS — DENNIS R. ECKER — 119381 — LICENSED — PROFESSIONAL ENGINEER

APPROVED FOR CONSTRUCTION BY:

CITY OF CEDAR PARK

10-6-16
DATE

APPROVED FOR CONSTRUCTION BY:

CITY OF CEDAR PARK

DATE

REVISION APPROVALS

NUMBER	BY	DATE	OK'd	DATE
NUMBER	BY	DATE	OK'd	DATE
NUMBER	BY	DATE	OK'd	DATE

PROJECT CONTROL NOTES:
1. ALL PROJECT COORDINATES ARE REFERENCED TO THE CITY OF CEDAR PARK SURVEY CONTROL MONUMENTS WHICH ARE BASED ON THE TEXAS STATE PLANE COORDINATE SYSTEM, CENTRAL ZONE, NAD 83/HARN 93 HORIZONTALLY AND NAVD 88 VERTICALLY. ALL COORDINATES SHOWN HEREON ARE ADJUSTED SURFACE POSITIONS. DIVIDE BY A SURFACE ADJUSTMENT FACTOR OF 1.00012 TO ADJUST TO GRID. UNITS: U.S. SURVEY FEET

2. PROJECT CONTROL VALUES WERE ESTABLISHED BY CONSTRAINING TO CITY OF CEDAR PARK SURVEY CONTROL MONUMENTS 5, 44, & 55.

BENCHMARK #7
(SET) CUT SQUARE ON TOP OF STORM DRAIN CURB INLET ON SOUTHWEST SIDE OF ANDERSON MILL ROAD DIRECTLY WEST OF LIME CREEK ROAD.
N: 10,151,832
E: 3,075,719
ELEVATION: 1020.66'

BENCHMARK #8
(SET) CUT SQUARE ON THE CENTER OF A STORM CURB INLET ON EAST SIDE OF ANDERSON MILL ROAD APPROXIMATELY 1120' NORTH OF LIME CREEK ROAD
N: 10,152,969
E: 3,076,064
ELEVATION: 1023.26'

BENCHMARK #9
(SET) CUT SQUARE IN TOP OF CURB ON THE NORTH SIDE OF CASPAR BEND APPROXIMATELY 125' EAST OF ANDERSON MILL ROAD
N: 10,153,772
E: 3,076,625
ELEVATION: 1021.33'

BENCHMARK #10
(SET) RAILROAD SPIKE IN POWER POLE APPROXIMATELY 55' EAST OF CENTERLINE OF ANDERSON MILL ROAD AND APPROXIMATELY 980' NORTH OF GASPAR BEND INTERSECTION
N: 10,154,733
E: 3,076,733
ELEVATION: 1033.49'

BENCHMARK #11
(SET) RAILROAD SPIKE IN POWER POLE APPROXIMATELY 55' EAST OF CENTERLINE OF ANDERSON MILL ROAD AND APPROXIMATELY 1830' NORTH OF GASPAR BEND INTERSECTION
N: 10,155,536
E: 3,076,428
ELEVATION: 1042.99'

BENCHMARK #12
(SET) CUT SQUARE ON BACK OF CONCRETE CURB, SOUTH SIDE OF DRIVEWAY FOR 16110 ANDERSON MILL ROAD APPROXIMATELY 55' EAST OF CENTERLINE OF ANDERSON MILL ROAD
N: 10,158,575
E: 3,076,775
ELEVATION: 1068.92'

BENCHMARK #13
(SET) CUT SQUARE ON BACK OF CONCRETE CURB MEDIAN, NORTH SIDE OF INTERSECTION OF ANDERSON MILL ROAD AND FM 1431
N: 10,160,034
E: 3,076,303
ELEVATION: 1055.30'

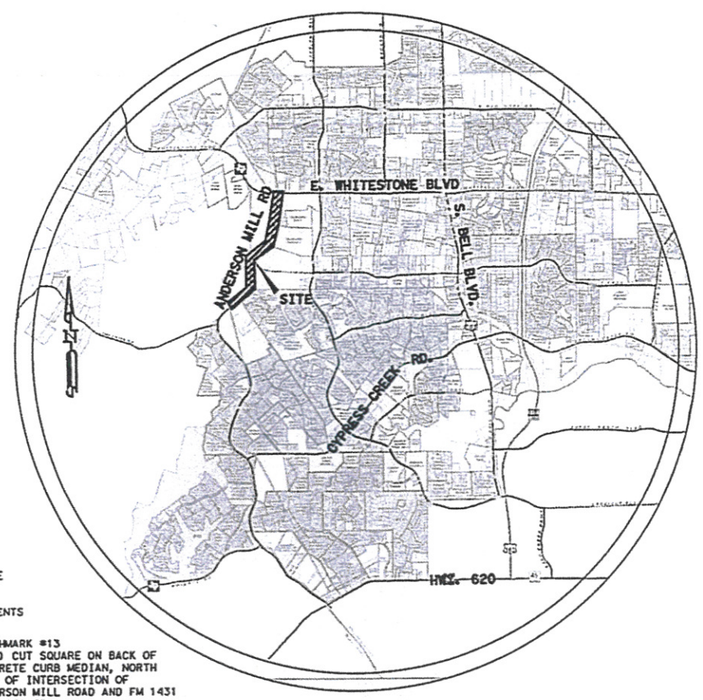

LOCATION MAP
(N.T.S.)

CONTROL POINT #21
(SET) PK NAIL W/WASHER
N: 10,151,897.39
E: 3,075,839.68

CONTROL POINT #23
(SET) PK NAIL W/WASHER
N: 10,152,912.68
E: 3,075,983.47

CONTROL POINT #25
(SET) 1/2" IRON ROD WITH YELLOW PLASTIC CAP STAMPED "TWG TRAV PT"
N: 10,153,833.06
E: 3,076,538.48

CONTROL POINT #27
(SET) 1/2" IRON ROD WITH YELLOW PLASTIC CAP STAMPED "TWG TRAV PT"
N: 10,154,673.24
E: 3,076,684.30

CONTROL POINT #29
(SET) 1/2" IRON ROD WITH YELLOW PLASTIC CAP STAMPED "TWG TRAV PT"
N: 10,155,599.63
E: 3,076,324.14

CONTROL POINT #32
(SET) 1/2" IRON ROD WITH YELLOW PLASTIC CAP STAMPED "TWG TRAV PT"
N: 10,156,925.12
E: 3,076,865.67

CONTROL POINT #34
(SET) 1/2" IRON ROD WITH YELLOW PLASTIC CAP STAMPED "TWG TRAV PT"
N: 10,157,881.00
E: 3,076,769.09

CONTROL POINT #36
(SET) 1/2" IRON ROD WITH YELLOW PLASTIC CAP STAMPED "TWG TRAV PT"
N: 10,158,865.98
E: 3,076,619.02

CONTROL POINT #38
(SET) 1/2" IRON ROD WITH YELLOW PLASTIC CAP STAMPED "TWG TRAV PT"
N: 10,159,860.73
E: 3,076,350.47

INDEX OF SHEETS

SHEET	DESCRIPTION
1	TITLE SHEET
2 - 14	GENERAL NOTES
14 - 21	QUANTITY SUMMARY TABLES
22	EXISTING TYPICAL SECTIONS
23 - 27	PROPOSED TYPICAL SECTIONS
28	CONSTRUCTION SEQUENCING NARRATIVE
29	TRAFFIC CONTROL TYPICALS - PHASE I
29 - 34	TRAFFIC CONTROL PLAN LAYOUT -
35	TRAFFIC CONTROL TYPICALS - PHASE
35 - 40	TRAFFIC CONTROL PLAN LAYOUT -
41	TRAFFIC CONTROL TYPICALS - PHASE
41 - 46	TRAFFIC CONTROL PLAN LAYOUT -
47	FM 1431 ADVANCED WARNING SIGNS
48 - 50	HORIZONTAL ALIGNMENT DATA
51 - 55	EXISTING CONDITIONS AND REMOVAL
56 - 73	ROADWAY PLAN AND PROFILE
74 - 82	INTERSECTION LAYOUTS
83	DRIVEWAY DETAILS
83 - 85	INTERSECTION LAYOUTS PROFILES
86	MISC. ROADWAY DETAILS
87 - 92	RETAINING WALL DETAILS
93 - 96	DRAINAGE AREA MAPS
97 - 114	DRAINAGE AREAS
115 - 132	DRAINAGE PLAN SHEETS
133 - 140	DRAINAGE PROFILE SHEETS
141 - 142	CULVERT LAYOUTS
143	DITCH DETAIL
144 - 148	POND DETAIL
149	HYDROLOGIC DATA AREA
150 - 151	HYDRAULIC DATA - INLET
152 - 167	HYDRAULIC DATA - LINK
168 - 170	DITCH CALCULATION
171 - 175	EROSION CONTROL
176	EXISTING SIGNAL LAYOUT
177	PROPOSED SIGNAL LAYOUT
178	SIGNAL ELEVATION
179	CONDUITS AND WIRING
180	PHASING AND SIGNS
181 - 190	ILLUMINATION LAYOUT
191	SUMMARY OF ELECTRICAL SERVICES
192	ELECTRICAL DETAILS
193	FOUNDATION DETAILS
194 - 198	SIGNING AND PAVEMENT MARKINGS
199 - 207	WATERLINE PLANS
208 - 211	WASTEWATER PLANS
212 - 218	STANDARD DETAILS - TRAFFIC
219 - 232	STANDARD DETAILS - ROADWAY
233 - 250	STANDARD DETAILS - DRAINAGE
251	STANDARD DETAILS - EROSION
252 - 280	STANDARD DETAILS - TRAFFIC
281 - 282	STANDARD DETAILS - WATER
283	STANDARD DETAILS - WASTEWATER
1 - 33	CROSS SECTIONS

CITY OF CEDAR PARK, TEXAS
CAPITAL IMPROVEMENT PROJECT GENERAL CONSTRUCTION NOTES
REVISED 07/08/14

1. General Contractor shall call for all utility locates prior to any construction. Water & wastewater owned by the City of Cedar Park can be located by calling the Service Center at 512-258-1275. Allow three business days for utility locates by the City of Cedar Park.

2. All construction shall be in accordance with the latest City of Austin Standard Specifications. City of Austin standards shall be used unless otherwise noted.

3. The contractor shall give the City a minimum of 48 hours notice before beginning each phase of construction. The phases of construction are as follows:
Provided with Traffic Control Layout- PHASE 1, 1A, and 2.

4. Prior to City acceptance of all improvements, all graded and disturbed areas are to be re-vegetated in accordance with the City of Austin Specification Item #604 unless another re-vegetation specification is specifically identified in the plans and/or bid form. When appropriate in the opinion of the Public Works Department, the City of Cedar Park may require native grasses to be used.

5. The Contractor shall provide the City of Cedar Park copies of all test results prior to acceptance of this project.

6. City, owner, engineer, contractor, representatives of all utility companies, and a representative from the testing lab shall attend pre-construction conference prior to start of construction. The contractor shall schedule the meeting with the City of Cedar Park Public Works Department 48 hours prior to this pre-construction meeting (512-401-5000).

7. Excess soil shall be removed at the contractor's expense. Notify the City of Cedar Park for approval if the disposal site is inside the City's jurisdictional boundaries.

8. Burning is prohibited. No blasting is allowed on this project.

9. Any changes or revisions to these plans must first be submitted to the City by the design engineer for review and written approval.

10. The Contractor will reimburse the City for all costs incurred as a result of any damage to any City utility by the Contractor, regardless of these plans.

11. Prior to City acceptance of this project, an engineer's concurrence letter and 22"x34"record drawings (one Mylar copy and a digital copy on CD ROM) shall be submitted to the Public Works Department. The Consulting Engineer and Contractor shall verify that all final revisions and changes have been made to the Mylar and digital copy prior to City submittal. Record construction drawings shall be provided to the City in digital format as AutoCAD ". dwg"files, MicroStation ".dgn"files or ESRI ".shp"files as well as PDF ".pdf" on CD ROM. Line weights, line types and text size shall be such that if half-size prints (11"x 17") were produced, the plans would still be legible. All required digital files shall contain a minimum of two (2) control points referenced to the State Plane Grid Coordinate System Texas Central Zone (4203), in US feet and shall include rotation information and scale factor required to reduce surface coordinates to grid coordinates in US feet. Half-size plans may also be required (see contract).

12. All responsibility for the adequacy of these plans remains with the engineer who prepared them. In reviewing these plans, the City of Cedar Park must rely on the adequacy of the work of the design engineer.

13. A traffic control plan, in accordance with the Texas Manual on Uniform Traffic Control Devices, shall be submitted to the City for review and approval prior to any partial or complete roadway closures.

14. The contractor shall keep the site clean and maintained at all times, to the satisfaction of the City. This project will not be accepted until the site has been cleaned and re-vegetated to the satisfaction of the City.

15. Signs are not permitted in Public Utility Easements, Set Backs or Drainage Easements.

16. Inspect temporary erosion controls on a daily basis. Adjust the controls and/or remove any sediment buildup as necessary.

17. Contractor will be responsible for keeping roads and drives adjacent to and near the site free from soil, sediment and debris. Contractor will not remove soil, sediment or debris from any area or vehicle by means of water, only shoveling and sweeping will be allowed. Contractor will be responsible for dust control from the site.

18. The Contractor shall be responsible for all damage to private property, which occurred as a result of any portion of this project. Any damage to private property shall be repaired to equal or better condition. The Contractor shall coordinate all repairs to private property with the property owner. Contractor shall pay and/or settle with private property owner for all costs related to any damage. The City will not provide separate pay for repair of any damages, reimbursements or settlements.

19. Contractor shall provide the services of the City's approved SCADA consultant and controls instrumentation consultant. (When applicable to SCADA) The cost of the consultant and/or any equipment shall be subsidiary to the cost of the project (no separate pay) unless specifically identified on the bid form.

20. The contractor shall make applications to Pedernales Electric Cooperative for electric service if new service is required. The City will assume the service upon acceptance of the project (if required). The contractor will pay for electric power until the meter is transferred to the City of Cedar Park. Impact and Application Fees required by PEC will be the responsibility of the Contractor unless specifically identified in the contract.

21. The contractor shall provide combination locks for all gates, hatches, vaults, and MCC boxes. Each lock shall be pre-approved and set to the City's requirements. No separate pay will be provided.

22. All work on these plans shall be performed. Pay for work shown on these plans, which are not identified in the contract, shall be considered incidental to the items specifically identified for payment.

23. The contractor shall provide a competent and qualified superintendent to supervise all work. The superintendent shall be present during all construction activities.

24. Any survey monuments damaged or moved as a result of this project shall be replaced to equal or better condition. A Texas Registered Land Surveyor shall oversee the replacement and certify the replacement for its intended use. No separate pay will be provided.

25. Adequate drainage conditions, in accordance with the City of Austin Drainage Criteria Manual, shall be maintained at all times.

26. Any tree removed or damaged by this project, which is not specifically identified to be removed by the plans, will be replaced according to the requirements of the City of Cedar Park Code of Ordinances. No separate pay will be provided.

27. The contractor shall uncover all utilities within the limits of construction and verify their horizontal and vertical location prior to any construction activities. The contractor shall notify the City and the Engineer, IN WRITING, of any conflicts prior to any other construction including but not limited to exact locations of conflicts with proposed or existing utilities. No additional pay unless specifically identified for payment in the contract documents. The contractor shall also make his own sub-surface investigation prior to bid.

28. Only stainless steel casing spacers are allowed in encasement pipe(s).

29. No separate pay will be given to de-water trenches or other excavated areas.

30. Soil material imported for re-vegetation of disturbed areas shall be approved by the Public Works department prior to placement. A sample (submittal) is required. Sandy-loam and/or soils with high clay content will not be accepted.

31. The contractor shall perform pumping stations and/or lift station start-up independently: prior to requesting witness or acceptance by the City. When a final start-up fails to be complete and acceptable and when City personnel are present at start-up, each additional start-up will be charged to the contractor, as liquidated damages, $500.00 per additional meeting.

32. Shutout of any customers of the City's utility due to tie-ins shall only be scheduled for nighttime work unless approved by the Public Works Department. The City's field representative shall coordinate and inspect all nighttime shutouts and tie-ins. The contractor shall request shutouts two weeks in advance. Shutouts will only be allowed in the following times and are subject to approval by the City: 10 PM - 6 AM; beginning on Tuesday, Wednesday or Thursday night(s). No extra time will be granted to the contract for unscheduled work in the time period allowed or due to requests outside the approved time periods.

33. All construction and construction related activities shall be performed Monday through Friday from 7:00 A.M. to 6:00 P.M. However, construction activities within one hundred feet (100') of a dwelling or dwelling unit that is both occupied as a residence and also located within one hundred feet (100') of the Toll Road 183A right-of-way shall be performed between the hours of 8:00 a.m. and 6:00 p.m. Approval for construction activities performed on Saturday shall be obtained in writing 48 hours in advance, and inspection fees at 1.5 times the hourly inspection rate shall be billed directly to the contractor. There shall be no construction or construction related activities performed on Sunday. The City reserves the right to require the contractor to uncover all work performed without City inspection.

34. Temporary rock crushing operations are not allowed. All sources for flexible base material are required to be approved by the City. Prior to base placement all current triaxial test reports for the proposed stockpiles are to be submitted to the City's project representative for review and approval.

STREET NOTES:

1. No trenching of compacted base will be allowed. A penalty and/or fine may be imposed to the general contractor if trenching of compacted base occurs without City approval, regardless of who performed the trenching.

2. All sidewalks shall comply with the Americans With Disabilities Act and the Texas Architectural Barriers Act. The City of Cedar Park has NOT reviewed these plans for compliance with the Americans With Disabilities Act, Texas Architectural Barriers Act, or any other accessibility legislation, and does not warranty or approve these plans for any accessibility standards. However, prior to project acceptance, the Contractor shall submit to the COCP documentation that the project was inspected by the Texas Department of Licensing and Regulation or a Registered Accessibility Specialist and the project is in compliance with the requirements of the Texas Architectural Barriers Act.

3. Street barricades shall be installed on all dead end streets and as necessary during construction to maintain job safety.

4. Any damage caused to existing pavement, curbs, sidewalks, ramps, etc., shall be repaired by the contractor to the satisfaction of the City prior to acceptance of this project.

5. Density testing of compacted subgrade material, first course and second course compacted base, shall be made at 500 foot intervals. Any failed tests will be re-tested at the expense of the contractor.

6. The contractor shall coordinate with the City's field representative 48 hours prior to scheduled density testing. The City's field representative shall witness all testing.

7. The City will notify the contractor of the name, contact and phone number of the testing laboratory for this job. The City will pay for all tests that pass the specifications the first time. The CONTRACTOR shall schedule the testing with the laboratory and notify the City's field representative of the time and location of all tests.

8. Traffic control signs and pavement markings in accordance with the Texas Manual on Uniform Traffic Control Devices to be installed as directed by the City of Cedar Park prior to City acceptance of this project.

9. Slope of natural ground adjacent to the right-of-way shall not exceed 3:1. If a 3:1 slope is not possible, a retaining wall or some other form of slope protection approved by the City shall be placed in a location acceptable to the City.

10. The City, engineer, contractor, and a representative from the asphalt-testing lab shall attend a pre-paving conference prior to the start of HMAC paving. The contractor shall give the City's field representative 48 hours notice prior to this meeting.

11. Re-testing of the asphalt pavement shall be limited to one re-test per project. Failed tests shall be the financial responsibility of the contractor.

12. All pavement markings and signage shall comply with MUTCD standards.Street name letter sizing shall be in accordance with MUTCD Table2D-2. Pavement markings shall be thermoplastic unless otherwise noted.

13. All signs shall be high intensity retro grade.

NUMBER	DATE	REVISION	APPROVED

STATE OF TEXAS
GREGORY C. CALKINS
111309
LICENSED
PROFESSIONAL ENGINEER
10/06/2016

CEDAR PARK

Binkley & Barfield, Inc
consulting engineers
Texas Registration Number F-257

ANDERSON MILL ROAD
GASPAR BEND TO WHITESTONE BLVD

GENERAL NOTES

DESIGN BY:	GCC	SCALE: NTS	
DRAWN BY:	DSH		
CHECKED BY:	DRE		
APPROVED BY:	BDR	SHEET: 1 OF 5	
PROJECT NO:	156402		
DATE:	10/6/2016	PAGE: 2	

10/6/2016
8:47:13 AM
...\CADD\SHEETS\GNN01*AM*01.dgn

WASTEWATER NOTES:

1. The contractor, with City approval, shall raise manhole frames and covers and water valve boxes to finished pavement grade at the contractor's expense. All utility adjustments shall be completed prior to final paving construction.

2. The location of any existing utility lines shown on these plans may not be accurate. Any damage to existing utility lines, both known and unknown, shall be repaired at the expense of the contractor. The contractor shall make his own sub-surface investigation prior to bid. The contractor shall uncover all utilities within the limits of construction and verify their horizontal and vertical location prior to any construction activities.

3. All iron pipe and fittings shall be wrapped with at least 8-mil polyethylene wrap, according to the COA Specification. All metallic pipe shall be cathodically protected.

4. All water mains, wastewater mains and service lines shall meet City of Austin minimum cover specifications. All streets are to be cut to subgrade prior to installation of water mains.

5. Where 48-inches of cover below subgrade cannot be achieved for wastewater service lines alternate materials shall be used. A minimum of 36-inches of cover below subgrade shall be achieved. Any wastewater service line with cover between 36-inch and 48-inches shall be SDR-26 PVC pressure pipe.

6. Gasketed PVC sewer main fittings shall be used to connect SDR-35 PVC to SDR-26 PVC pressure pipe or C-900.

7. SDR-35 WW is not allowed.

8. All sanitary sewers, excluding service lines, shall be mandrel tested per Texas Natural Resource Conservation Commission criteria. A mandrel test will not be performed until backfill has been in place for a minimum of 30 days.

9. All sanitary sewers, including service lines, shall be air tested per City of Austin Standard Specifications.

10. Density testing of compacted backfill shall be made at a rate of one test per two foot lifts per 500 feet of installed pipe, unless specified otherwise by the City.

11. City to be given 48 hours notice prior to all testing of water and wastewater lines. City inspection is required for all testing of water and wastewater lines.

12. Where a water or wastewater line crosses above (or below) a storm sewer structure and the bottom (or top) of the pipe is within 18 inches of the top (or bottom) of the utility structure, the pipe shall be encased with concrete for a distance of at least 1 ft. on either side of the ditch line of the utility structure or the storm sewer. Concrete encasement will not be required for ductile iron (thickness Class 50), AWWA C-900 (SDR-14) 200 psi rated PVC in sizes to 12 inches or AWWA C-905 (SDR-25) 165 psi rated PVC in sizes larger than 12 inches. Concrete encasement shall conform to C.O.A. standard detail 505-1.

13. The allowable (maximum) adjustment for a manhole shall be 12" (inches) or less.

14. Where a sewer line crosses a water line, the sewer line shall be one 20 ft. joint of 150 psi (or greater if specified in the plans) rated PVC centered on crossing.

15. All manhole and inlet covers shall read "City of Cedar Park".

16. All manhole lids outside the pavement shall be bolted.

17. Contractor to notify City of Cedar Park 48 hours prior to connecting to existing utilities. Inspection of connections to existing utilities is required.

18. All pipe bedding material shall conform to City of Austin Standard Specifications.

19. Unless otherwise specified by the Engineer all concrete is to be Class "A" (5 sack, 3000 psi ~ 28-days), and all reinforcing steel to be ASTM A615 60.

20. All wastewater manholes to be coated with materials and procedures listed in City of Austin Qualified Products List No. WW-511 (WW-511A and WW-511B are not allowed). All manholes will be pre-coated or coated AFTER testing.

21. All manholes will be vacuum tested only.

22. Tracer tape shall be installed on all water and wastewater mains in accordance with City of Austin Standards regardless of the type of pipe or depth of pipe.

23. Piping in and around lift station valve vaults will be painted and/or coated to the City's specifications.

24. MCC's, junction boxes or any housing for electrical components shall be NEMA 4X stainless steel. Painted metal or any other type of box will not be accepted unless specifically identified in the plans.

25. All wastewater lines 10" and larger shall be TV Video taped according to COA 510 at the Contractor's expense. The contractor shall supply two copies to the City's Field Representative. No separate pay unless noted on the bid form.

26. Calcutta MH rings are not allowed in the TXDOT ROW.

27. Polybrid Coatings on wastewater manholes will not be allowed without pre-approval from the project manager. Any other manhole coating product appearing on the COA SPL WW-511 is acceptable and required.

28. All pressure pipe shall have mechanical restraint and concrete thrust blocking at all valves, bends, tees, plugs, and other fittings.

WATER NOTES:

1. The top of valve stems shall be at least 18", and no more than 36", below finished grade. Valve stem risers shall be welded on each end to the City's satisfaction.

2. Fire hydrant leads to be ductile iron, Class 350, and installed per City of Austin standard specifications and City of Cedar Park detail.

3. The contractor shall provide cuts for all water lines and FH bury lines in accordance with the contract.

4. Approved 5 1/4" fire hydrants: American Flow Control, B84B Mueller Company, Super Centurion 250, Clow Medallion Hydrant, American AVK Company, Series 27 (Model 2780).

5. *All fire hydrants must meet City of Cedar Park thread specifications (National Thread).

6. *Blue reflector markers shall be located on the centerline of the pavement across from all fire hydrants. Pavement markers at intersections shall be four-sided.

7. All water lines, including service lines, shall be pressure and leak tested per City of Austin Standard Specifications and witnessed by the City of Cedar Park representative. All failed tests shall be the fiscal responsibility of the contractor, and the contractor may be required to re-test lines if the testing is not witnessed by the City. Contractor must notify the City of Cedar Park 48 hours prior to any testing.

8. All water lines shall be sterilized and bacteriologically tested in accordance with City of Austin Standards. The contractor is responsible for sterilization and the City of Cedar Park is responsible for submitting bacteriological samples to the State unless otherwise approved by the Public Works Department.

9. All water valve risers not in pavement shall be set in concrete in accordance with the City's specifications and details. The standard detail is available on the City's web site.

10. Density testing of compacted backfill shall be made at a rate of one test per two foot lifts per 500 feet of installed pipe unless otherwise approved by the Public Works department.

11. Contractor to obtain a water meter from the City of Cedar Park for any water that may be required during construction. (512-401-5000)

12. All water meter boxes shall be Ford Gulf Meter Box with locking lid.
A. SINGLE G-148-233
B. DUAL DG-148-243
C. 1" METER YL111 - 444
D. 1 ½" - 2" METER 1730-R (LID) & 1730-12 (BOX)/ACCEPTABLE BOXES FOR THIS SIZE OF METER

13. Manhole frames and covers and water valve boxes shall be raised to finished pavement grade at the contractor's expense with City inspection. All utility adjustments shall be completed prior to final paving construction.

14. The location of any existing utility lines shown on these plans is the best available and may not be totally accurate. Any damage to existing utility lines, both known and unknown shall be repaired at the expense of the contractor. The Engineer and/or the City make no guarantee or warranty to the accuracy of these plans. The contractor shall make his own sub-surface investigation prior to bid. The contractor shall uncover all utilities within the limits of construction and verify their horizontal and vertical location prior to any construction activities.

15. All iron pipe and fittings shall be wrapped with at least 8-mil polyethylene wrap in accordance with the COA specification. All metallic pipe shall be cathodically protected.

16. All water mains, wastewater mains and service lines shall meet City of Austin specifications and minimum cover requirements. All streets are to be cut to subgrade prior to installation of water mains.

17. City to be given 48 hours notice prior to all testing of water and wastewater lines. City inspection is required for all testing of water and wastewater lines.

18. Where a water or wastewater line crosses above (or below) a storm sewer structure and the bottom (or top) of the pipe is within 18 inches of the top (or bottom) of the utility structure, the pipe shall be encased with concrete for a distance of at least 1 ft. on either side of the ditch line of the utility structure or the storm sewer. Concrete encasement may not be required for ductile iron (thickness Class 50), AWWA C-900 (SDR-14) 200 psi rated PVC in sizes to 12 inches or AWWA C-905 (SDR-25) 165 psi rated PVC in sizes larger than 12 inches. Concrete encasement shall conform to C.O.A. standard detail 505-1. This note does not allow for pipe that would otherwise have a higher maximum operating pressure.

19. Contractor to notify City of Cedar Park 48 hours prior to connecting to existing utilities. Inspection is required.

20. All pipe bedding material shall conform to City of Austin Standard Specifications.

21. Tracer tape shall be installed on all water and wastewater mains in accordance with City of Austin Standards regardless of the type of pipe or depth of pipe installed.

22. Unless otherwise specified by the Engineer all concrete is to be Class "A" (5 sack, 3000 psi ~ 28-days), and all reinforcing steel to be ASTM A615 60.

23. The City considers protection of its water system paramount to construction activities. City personnel will operate, or authorize the contractor to operate, all water valves that will pass through the City's potable water. The contractor may not operate any water valve, existing or proposed, that will allow water from the City's water system to flow to a proposed or existing water system without the express consent of the City. Notify the City two business days in advance of any request to operate a water valve. The general contractor may be fined $500 or more, including additional theft of water fines, if a water valve is operated in an unauthorized manner, regardless of who operated the valve.

24. All water valves over 24" in size shall have a by-pass line and valve installed. By-pass valves and lines are subsidiary to the cost of the valve unless specifically identified on the bid form.

25. All water pipe and appurtenances larger than 12" shall have a maximum operating pressure greater than 250 psi unless specifically identified on the bid form.

26. A.Y. McDonald "T" series compression fittings will not be accepted by the City of Cedar Park. Mac-Pak compression fittings, or another type listed on the COA Standard Product List is acceptable.

27. All potable water system components installed after January 4, 2014, shall be "lead free" according to the United States Safe Drinking Water Act. The only components exempt from this requirement are fire hydrants. Components that are not clearly identified by the manufacturer as meeting this requirement by marking, or on the product packaging, or by pre-approved submittal, will be rejected for use. A NSF certification will be adequate if the certification has not expired as of January 4, 2014 and remains unexpired at the time of construction.

28. All pressure pipe shall have mechanical restraint and concrete thrust blocking at all valves, bends, tees, plugs, and other fittings.

NUMBER	DATE	REVISION	APPROVED

STATE OF TEXAS
GREGORY C. CALKINS
111309
LICENSED
PROFESSIONAL ENGINEER
10/06/2016

CEDAR PARK

Binkley & Barfield, Inc
consulting engineers
Texas Registration Number F-257

ANDERSON MILL ROAD
GASPAR BEND TO WHITESTONE BLVD

GENERAL NOTES

DESIGN BY:	GCC	SCALE: NTS	
DRAWN BY:	DSH		
CHECKED BY:	DRE	SHEET: 2 OF 5	
APPROVED BY:	BDR		
PROJECT NO:	156402	PAGE: 3	
DATE:	10/6/2016		

10/6/2016
8:47:14 AM
...\CADD\SHEETS\GNN01*AM*02.dgn

STORM SEWER NOTES:

1. The contractor, with City inspection, shall raise manhole frames and covers and water valve boxes to finished pavement grade at the contractor's expense. All utility adjustments shall be completed prior to final paving construction. The contractor shall backfill around manholes and junction boxes with Class A concrete. All utility adjustments shall be completed prior to final paving construction.

2. All manhole lids shall be 32" or larger, unless expressly approved in writing by the Public Works Department. All lids outside the pavement will be bolted.

3. The location of any existing utility lines shown on these plans is the best available and may not be totally accurate. Any damage to existing utility lines, both known and unknown, shall be repaired at the expense of the contractor.

4. Corrugated Metal Pipe is not permitted.

5. All manhole and inlet covers shall read "City of Cedar Park ".

6. Contractor to notify City of Cedar Park 48 hours prior to connecting to existing utilities.

7. All pipe bedding material shall conform to City of Austin Standard Specifications.

8. Unless otherwise specified by the Engineer all concrete is to be Class "A" (5 sack, 3000 psi ~ 28-days), and all reinforcing steel to be ASTM A615 60.

9. Contractor to install and maintain geo-textile fabric barrier (inlet protection) around storm sewer leads and inlets to prevent silt and other material from entering the storm sewer collection system.

PROJECT SPECIFIC NOTES:

1. Contractor shall field verify any conflicts with existing utilities, irrigation lines, etc. prior to construction.

2. Contractor shall field verify and pothole all existing utility elevations prior to construction.

3. Contractor shall notify engineer of any conflicts with the proposed plans prior to construction.

4. Contractor shall refer to city standard specifications for further details of specific construction items.

5. Refer to geotechnical engineering report for details of existing and proposed soil conditions, pavement design,
and related engineering and construction requirements.

6. Contractor shall repair any damage made to existing pavement and/or utilities that occur as a result of construction activity. repairs shall return damaged items to existing or better condition.

7. All manholes and utility appurtenances in pavement are to be designed for HS-20 traffic loads per city standards.

8. Contractor shall maintain access to all properties at all times.

9. Contractor shall coordinate with property owners as necessary during construction.

10. Work hours shall be from 7:00 a.m.-6:00 p.m. there shall be no construction or construction vehicles in travel lanes, or any other disruption of traffic before 9:00 a.m. or after 4:00 p.m. Work shall not take place within 500 ft of a residence prior to 8:00 AM.

11. Any lane closures shall be coordinated with the city at least 5 days in advance.

12. The city shall be notified at least 48 hours in advance of any weekend work.

13. If disturbed area is not to be worked on for more than 14 days, at any point during construction, disturbed area needs to be stabilized by revegetation, mulch, tarp, or revegetation matting.

14. New chain link fence shall be 6 ft high with galvanized vinyl coated (green color) webbing. Fence will include 45 degree babrbed wire arm.

15. New barrier shall be pre fabricated concrete barrier, 32 inch height, 24 inch bottom width TXDOT CSB(1)-10.

16. Slope of natural ground adjacent to the right-of-way may not exceed 3:1 without written approval of the city's field representitive.

17. City of Austin minimum cover over 12" diameter wastewater pipe is 5.5 ft, unless otherwise approved in writing by the engineer.

18. Density testing of compacted backfill shall be done by the method or methods approved in writing by the city's representative prior to construction.

19. Contractor to provide drawings for review prior to manufacture of CSB concrete barrier. See Details on Plans.

20. There are areas within the project that may require additional grading outside of the proposed improvements. These areas can be found on the construction drawings. There may be additional areas that are suitable for grading, these areas require the written approval of the City's Field Representative prior to construction.

21. Contractor to obtain written approval for the removal of any trees 8" dia. or greater from City's field representative prior to construction.

22. The Contractor is responsible for maintaining existing trees, bushes, grass, or other landscape during construction. There are areas within the project limits that are presently landscaped and may have an operating irrigation system, or that will require removal / reconstruction of existing landscape, and require uninterrupted watering, or new watering systems. These areas and new water service locations are provided on the plans.

23. The Contractor shall maintain new landscaping following construction. This may also include areas such as the outfall channel downstream of the new box culvert, cut of fill slopes to be seeded for erosion control, new plantings, and existing grassed areas that are to be restored to their original condition following construction.

24. The Contractor shall stake the new sidewalk when not attached and parallel to the new curb and gutter; and schedule a field inspection by the City's Field Representative prior to placement of concrete. This visual inspection will provide input as to horizontal and vertical location, slope, and adherence to A.D.A requirements. The Contractor is responsible to provide improvements that pass inspection following construction, including and not limited to A.D.A. slope, ramp, railing, drop-off, or other related City and TxDOT requirements.

25. It is the Contractor's responsibility to provide a safe work area during construction. The construction will include areas adjacent to Quarry boundaries, steep slopes, rock cuts, wire fences, in areas of heavy vehicular traffic, and other potential conflicts. The Contractor will provide the necessary measures to protect workers, equipment, pedestrians, bicyclists, and vehicular traffic.

26. The Contractor, subcontractors, suppliers, and manufacturers shall provide shop drawings for items that are not detailed, specified, or specifically noted on the plans or in the specifications or in any special provisions. Shop drawings shall be reviewed and approved by the Engineer or the City's Field Representative prior to construction.

27. The Contractor shall submit any Requests for Information (R.F.I.) to the Engineer or the City's Field Representative in a timely manner. Seven (7) working days will be allowed for review and return of the R.F.I. Submittal of an R.F.I. is not the same as a Shop Drawing review.

28. The Contractor is responsible for Preparation of the Right of Way. Preparation, grading, removal of deleterious materials for the area between the East Quarry and Subdivision Fence, from the new box culvert to the outfall structure and the existing drainage tract is subsidiary to Preparation of the Right of Way. During grading, excess excavated materials are to be placed adjacent to the Quarry Edge (Drop-off) as a physical barrier.

29. The Contractor is to maintain a minimum of 1-lane open to traffic in each direction on Anderson Mill Rd. during construction. Shoring may be required to maintain traffic and will be considered subsidiary to the cost of the placement of that item. Written requests shall be submitted to the City's Field Representative for approval prior to construction when there may be interruptions to traffic or interruptions to utility service during the placement underground infrastructure improvements.

30. During construction, the temporary asphalt concrete pavement shall use PG 64-22 binder. Permanent A.C. pavement shall use PG 70-22 binder. Contractor to refer to the pavement section shown on the plans, the specifications, and the Geotechnical Report.

31. The Contractor is to provide erosion control, construction traffic control, and roadway preparation as needed at the start of construction to provide the cut-slope excavation adjacent to the Coreslab parcel and the fill and compaction for new power pole locations adjacent to the west Quarry, as shown on the Roadway Plans. This initial work shall include the underground duct banks or other underground conduit locations as shown on the Illumination Plans.
This work will enable the utility companies to move forward with their removal/relocation/replacement and new construction and installation of overhead and underground facilities. The Contractor shall construct these improvements in the beginning of the first phase of construction.

32. New driveway construction shall include grading as necessary to provide a smooth transition to existing ground.
In addition the graded area shall meet the City's driveway standards for profile and breakovers. This work shall be Incidental to those items included in new driveway construction and shall meet the approval of the City's Field Representative.

33. High early strength concrete is to be used at the M.E. Ruby and Coreslab driveways.

34. The Contractor shall not close the Gaspar Bend intersection to traffic during construction."Black Base"asphaltic concrete may be used with approval of the City's Field Representative during driveway construction if inclement weather or traffic use is anticipated during construction. This is also true for all current driveways being reconstructed during this project.

35. The Contractor shall provide temporary asphalt pavement 'level-up' segment for a smooth vertical and horizontal transition between existing and new pavement placed during construction, whether to transition pavement sections during separate construction phases or to provide a smooth transition for traffic in other areas designated by the City's Field Representative. This work shall be incidental to Item 508 6001 Constructing Detours.

36. The Contractor is responsible for coordination with private property owners to obtain their written permission for access onto their property for new driveway construction or reconstruction, to maintain ingress and egress to said property during construction, and for any related construction activities. The City or the City's Field Representative may assist in any negotiations. Construction shall not commence on any private driveways that may extend beyond the right-of-way without obtaining prior approval of the property owner.

37. New sidewalk ramp detectable warning surface (truncated domes) are to be constructed in the locations shown and as provided on the roadway plans and driveway details. The truncated domes are to be Terracotta (red) In color. The Contractor shall obtain written approved from the City's Field Representative for the type of detectable warning surface, color, and construction method prior to placement.

38. Crosswalk pavement marking shall be 45-degree hatched diagonal markings as per the latest revision of the Manual on Uniform Traffic Control Devices (MUTCD). All striping, signage, pavement marking and symbols shall be provided as shown on the plans and as directed by the City's Field Representative.

39. The Contractor shall consider both downstream and upstream impacts prior to new storm drain construction. This work shall include, but not be limited to, timing of catch basin, connecting pipe, manhole, storm drain trunk line, safety end treatments (SET's) , box culvert, crossing pipe, roadway ditch, spillway, channel, and roadway construction. It may be necessary to provide temporary pipe plugs, catch basin covers, or other measures to mitigate impacts of stormwater runoff, especially when upstream improvements are constructed prior to downstream improvements and when connections will be made between phased improvements.

40. Sawcut of asphalt pavement, concrete pavement, curb & gutter, sidewalk, existing storm drain, water, or wastewater pipe or other items shall be subsidiary to the Item and Specification as referred to on the plans, specifications, or special provisions.

NUMBER	DATE	REVISION	APPROVED

STATE OF TEXAS
GREGORY C. CALKINS
111309
LICENSED
PROFESSIONAL ENGINEER
10/06/2016

CEDAR PARK

Binkley & Barfield, Inc
consulting engineers
Texas Registration Number F-257

ANDERSON MILL ROAD
GASPAR BEND TO WHITESTONE BLVD

GENERAL NOTES

DESIGN BY:	GCC	SCALE: NTS	
DRAWN BY:	DSH		
CHECKED BY:	DRE		
APPROVED BY:	BDR	SHEET: 3 OF 5	
PROJECT NO:	156402		
DATE:	10/6/2016	PAGE: 4	

10/6/2016
8:47:15 AM
...\CADD\SHEETS\GNN01*AM*03.dgn

GENERAL NOTES: Version June 7, 2016

The following standard detail sheet or sheets have been modified:

Modified Standards

GENERAL

Perform work during good weather. If work is damaged by a weather event, the Contractor is responsible for all costs associated with replacing damaged work.

References to manufacturer's trade name or catalog numbers are for the purpose of identification only. Similar materials from other manufacturers are permitted if they are of equal quality, comply with the specifications for this project, and are approved.

If work is performed at Contractor's option, when inclement weather is impending, and the work is damaged by subsequent precipitation, the Contractor is responsible for all costs associated with replacing the work, if required.

The roadbed will be free of organic material prior to placing any section of the pavement structure.

Equip all construction equipment used in roadway work with highly visible omnidirectional flashing warning lights.

Intelligent Transportation Systems (ITS) Infrastructure may exist within the limits of this project and that the system must remain operational throughout construction. The exact location of ITS Infrastructure is not known. Contact the TxDOT Area Engineer's or Inspection Team's Office for the location(s) at least 48 hours before commencing any work that might affect present ITS Infrastructure Use caution if working in these areas to avoid damaging or interfering with existing facilities. Repair any damage to this system within 8 hours of occurrence at no cost to the Department. In the event of system damage, notify TxDOT/CTECC at (512) 974-0883 within one hour of occurrence. Failure of the Contractor to repair damage to any infrastructure that conveys any corridor information to TxDOT/CTECC will result in the Contractor being billed for the full cost of emergency repairs.

Provide a smooth, clean sawcut along the existing asphalt ***(or concrete)*** pavement structure, as directed. Consider subsidiary to the pertinent Items.

Construct all manholes/valves to final pavement elevations prior to the placement of final surface. If the manholes/valves are going to be exposed to traffic, place temporary asphalt around the manhole/valve to provide a 50:1 taper. The asphalt taper is subsidiary to the ACP work.

Project Number: **Sheet:**
County: **Control:**
Highway: RM 1431 @ Anderson Mill Rd.

Supply litter barrels in enough numbers at locations as directed to control litter within the project. Consider subsidiary to pertinent Items.

Use a self-contained vacuum broom to sweep the roadway and keep it free of sediment as directed. The contractor will be responsible for any sweeping above and beyond the normal maintenance required to keep fugitive sediment off the roadway as directed by the Engineer.

Protect all areas of the right of way, which are not included in the actual limits of the proposed construction areas, from disturbance. Restore any area disturbed because of the Contractor's operations to a condition as good as, or better than, before the beginning of work at no cost to the state.

Damage to existing pipes and SET's due to Contractor operations will be repaired at Contractor's expense.

All locations used for storing construction equipment, materials, and stockpiles of any type, within the right of way, will be as directed. Use of right of way for these purposes will be restricted to those locations where driver sight distance to businesses and side street intersections is not obstructed and at other locations where an unsightly appearance will not exist. The Contractor will not have exclusive use of right of way but will cooperate in the use of the right of way with the city/county and various public utility companies as required.

Measure all minimum vertical clearances for all structures (including, but not limited to, signal mast arms, span wires, and overhead sign bridge structures) within the limits of the project for all roadway alignments in all directions of travel. Coordinate with the Engineer to take these measurements and obtain prior to opening roadways to traffic unless otherwise approved. The Engineer will report all minimum vertical clearance information to the District Permit Office.

ITEM 432 - RIPRAP
Mow strip riprap will be 4 in. and all other riprap will be 5 in. unless otherwise shown on the plans or in the pay items.

Saw-cut existing riprap then epoxy 12 in. long No. 3 or No. 4 bars 6 in. deep at a maximum spacing of 18 in. in each direction to tie new riprap to existing riprap. This work is subsidiary.

For cement-stabilized riprap, provide Type A Grade 5 flexible base. Compressive strengths for Item 247 are waived.

ITEM 496 - REMOVING STRUCTURES
Submit a demolition plan to the Engineer. Have the plan signed and sealed by a licensed professional engineer when the structure will continue to accommodate traffic after removal has begun and the removal impacts any part of the structure below the deck or riding surface. If applicable, the plan must detail requirements for meeting the U.S. Army Corps of Engineers' Section 404 Permit. The demolition plan must detail handling of roadway and waterway traffic. Waterway traffic must be maintained at all times unless a closure is approved by the Engineer.

NUMBER	DATE	REVISION	APPROVED

STATE OF TEXAS
GREGORY C. CALKINS
111309
LICENSED
PROFESSIONAL ENGINEER
10/06/2016

CEDAR PARK

Binkley & Barfield, Inc
consulting engineers
Texas Registration Number F-257

ANDERSON MILL ROAD
GASPAR BEND TO WHITESTONE BLVD

GENERAL NOTES

DESIGN BY:	GCC	SCALE: NTS	
DRAWN BY:	DSH		
CHECKED BY:	DRE		
APPROVED BY:	BDR	SHEET: 4 OF 5	
PROJECT NO:	156402		
DATE:	10/6/2016	PAGE: 5	

10/6/2016
8:47:16 AM
...\CADD\SHEETS\GNN01*AM*04.dgn

Project Number: **Sheet:**
County: **Control:**
Highway: RM 1431 @ Anderson Mill Rd.

No debris is allowed to fall into a body of water. Debris that falls into the water must be removed at the end of each work day. Debris that falls into the floodway must be removed at the end of each work week or prior to a rain event.

ITEM 506 - TEMPORARY EROSION, SEDIMENTATION, AND ENV CONTROLS
Consider the SW3P for this project to consist of the following items, as directed: Temporary Sediment Control Fence, Rock Filter Dams, Construction Exits, and Earthwork for Erosion and Sediment Control.

ITEM 512 – PORTABLE TRAFFIC BARRIER
Designated source barrier stockpile locations: SH 45 just west of US 183 South, or SH 130 @ Greg Manor Rd. Upon completion of the project, designated source PTB deemed unsalvageable by the Engineer will become the property of the contractor. If no hardware is available for designated source, the contractor will furnish all necessary hardware to install the PTB and reimbursed in accordance with Item 9 Force Account. Bundle and return all PTB connection hardware to the nearest Area Office.

In lieu of a crash cushion, place 25:1 Class C concrete transition where PTB terminates adjacent to existing concrete barrier. Installation and removal will be paid using Item 512.

Any increase in temporary barrier quantities that occur due to Contractor changes in the sequence of work or the traffic control plan will not be paid.

Item 514 - Concrete Traffic Barrier
Provide a 40:1 transition taper for Type 3. Backfill for Type 3 will be coarse aggregate capped with 4" Class B concrete. Concrete cap is subsidiary.

ITEM 528, 531 and 536
Reinforcement will be in accordance with Item 432.3.1 unless shown on the plans. Fiber reinforcement is not allowed. Class A and B Concrete are allowed to use Coarse Aggregate Grades 1-8. Expansion joints will be placed every 40 ft. Expansion joints must be 1" wide asphalt board and flush with the surface. The bottom of the joint shall be at half the depth of the concrete. Sidewalk cross slope must not exceed 1.5%.

Unless shown on the plans or in the pay items, all concrete will be 5 in. thick and have 2 in. sand, base, or RAP bedding. Furnish base meeting the requirement for any type or grade in accordance with Item 247. Base compressive strengths are waived. RAP must be 100% passing a 1 in. sieve. Bedding must be placed using ordinary compaction.

If roots are encountered verify with the Engineer prior to accommodating or removing 2 in. diameter or larger roots. Root removal must be in accordance with Item 752.4.2. Roots may remain in the bedding or base. For improvements within 6 in. of a root, the concrete thickness may be reduced by 1 in. and the bedding increased by 1 in. to minimize impacts to the roots. Adjust bedding and surface profile to provide a 1 in. bedding cushion around the roots. The surface profile may be adjusted to the extent allowed by ADA. This work is subsidiary.

NUMBER	DATE	REVISION	APPROVED

STATE OF TEXAS
GREGORY C. CALKINS
111309
LICENSED
PROFESSIONAL ENGINEER
10/06/2016

CEDAR PARK

Binkley & Barfield, Inc
consulting engineers
Texas Registration Number F-257

ANDERSON MILL ROAD
GASPAR BEND TO WHITESTONE BLVD

GENERAL NOTES

DESIGN BY:	GCC	SCALE: NTS	
DRAWN BY:	DSH		
CHECKED BY:	DRE		
APPROVED BY:	BDR	SHEET: 5 OF 5	
PROJECT NO:	156402		
DATE:	10/6/2016	PAGE: 6	

10/6/2016
8:47:21 AM
...\CADD\SHEETS\GNN01*AM*05.dgn

GENERAL NOTES

The following standard detail sheet or sheets have been modified:

Modified Standards

Long Mast Arm Assembly Parts List LMA(5)-12
SMA-80 (1) – 12 Traffic Signal Support Structures Single Mast Arm Assembly (80 MPH Wind Zone)
TS-FD-12 Traffic Signal Pole Foundation

GENERAL

Perform work during good weather. If work is damaged by a weather event, the Contractor is responsible for all costs associated with replacing damaged work.

References to manufacturer's trade name or catalog numbers are for the purpose of identification only. Similar materials from other manufacturers are permitted if they are of equal quality, comply with the specifications for this project, and are approved.

If work is performed at Contractor's option, when inclement weather is impending, and the work is damaged by subsequent precipitation, the Contractor is responsible for all costs associated with replacing the work, if required.

Equip all construction equipment used in roadway work with highly visible omnidirectional flashing warning lights.

Intelligent Transportation Systems (ITS) Infrastructure may exist within the limits of this project and that the system must remain operational throughout construction. The exact location of ITS Infrastructure is not known. Contact the TxDOT Area Engineer's or Inspection Team's Office for the location(s) at least 48 hours before commencing any work that might affect present ITS Infrastructure Use caution if working in these areas to avoid damaging or interfering with existing facilities. Repair any damage to this system within 8 hours of occurrence at no cost to the Department. In the event of system damage, notify TxDOT/CTECC at (512) 974-0883 within one hour of occurrence. Failure of the Contractor to repair damage to any infrastructure that conveys any corridor information to TxDOT/CTECC will result in the Contractor being billed for the full cost of emergency repairs.

Provide a smooth, clean sawcut along the existing asphalt ***(or concrete)*** pavement structure, as directed. Consider subsidiary to the pertinent Items.

Supply litter barrels in enough numbers at locations as directed to control litter within the project. Consider subsidiary to pertinent Items.

Protect all areas of the right of way, which are not included in the actual limits of the proposed construction areas, from disturbance. Restore any area disturbed because of the Contractor's

operations to a condition as good as, or better than, before the beginning of work at no cost to the state.

Damage to existing pipes and SET's due to Contractor operations will be repaired at Contractor's expense.

All locations used for storing construction equipment, materials, and stockpiles of any type, within the right of way, will be as directed. Use of right of way for these purposes will be restricted to those locations where driver sight distance to businesses and side street intersections is not obstructed and at other locations where an unsightly appearance will not exist. The Contractor will not have exclusive use of right of way but will cooperate in the use of the right of way with the city/county and various public utility companies as required.

Measure all minimum vertical clearances for all structures (including, but not limited to, signal mast arms, span wires, and overhead sign bridge structures) within the limits of the project for all roadway alignments in all directions of travel. Coordinate with the Engineer to take these measurements and obtain prior to opening roadways to traffic unless otherwise approved. The Engineer will report all minimum vertical clearance information to the District Permit Office.

During evacuation periods for Hurricane events the Contractor will cooperate with Department for the restricting of Lane Closures and arranging for Traffic Control to facilitate Coastal Evacuation Efforts.

ITEM 416 - DRILLED SHAFT FOUNDATIONS
Stake all Foundations, for approval, before beginning drilling operations.

Calculate the vertical signal head clearance before placing any signal pole foundation.

For mast-arm signal and strain pole anchor bolts, set two in tension and two in compression. Obtain approval of placement prior to placing concrete.

Remove spoils from a flood plain at the end of each work day.

STATE OF TEXAS
BRIAN DAVID VAN DE WALLE
68525
REGISTERED PROFESSIONAL ENGINEER

10/3/2016

Kimley»Horn
F-928

CEDAR PARK

© 2016 CITY OF CEDAR PARK

ANDERSON MILL AND RM 1431
TRAFFIC SIGNAL
GENERAL NOTES

DES: RPO	CEDAR PARK JOB NO. 067783504	SHEET NO.
CK: BDV		7

Project Number: **Sheet:**
County: Williamson **Control:**
Highway: RM 1431

ITEM 502 - BARRICADES, SIGNS, AND TRAFFIC HANDLING
Table 1

Roadway	Limits	Allowable Closure Time
IH 35	All (1 lane closed)	9 P to 5 A
IH 35	All (2 lanes closed, see allowable work below)	9 P to 5 A
IH 35	All (2 lanes closed, all work)	11 P to 5 A
IH 35	All (Full Closure, see allowable work below)	11P to 4 A
SH 45	US 183 to SH130	8 P to 5 A
LP 1	William Cannon to Parmer Lane	8 P to 5 A
US 183	SH 29 to FM 1327	8 P to 5 A
SH 71	SH 130 to IH 35	8 P to 5 A
SH 71	SH 304 to Tahitian Drive	8 P to 5 A
SH 71	US 290 W to RM 3238	8 P to 5 A
US 290 W	IH 35 to Nutty Brown Rd	8 P to 5 A
US 290 E	IH 35 to SH 95	8 P to 5 A
FM 734	FM 1431 to US 290 E	8 P to 5 A
US 79	IH 35 to Bus 79 in Taylor	8 P to 5 A
RM 1431	Lohmans Ford Rd to IH 35	8 P to 5 A
SH 29	LP 332 western terminus to SH 130	8 P to 5 A
SH 80	Charles Austin to River Road	8 P to 5 A
RM 2222	All	8 P to 5 A
RM 620	All	8 P to 5 A
RM 2244	All	8 P to 5 A
SPUR 69	All	8 P to 5 A
LP 360	All	8 P to 5 A
LP 343	All	8 P to 5 A
LP 275	All	8 P to 5 A
FM 1325	All	8 P to 5 A
All	Within 200' of a signalized intersection	8 P to 5 A

Friday night lane closures will not be allowed for any project. One lane in each direction will remain open at all times. No closures will be allowed on the weekends, working day prior, and working day after the National Holidays defined in the Standard Specifications and Easter weekend. No closures will be allowed on Friday and the weekends for projects within 20 miles of Formula 1 at COTA, ACL Fest, SXSW, ROT Rally, UT home football games, or other special events that could be impacted by the construction. All lanes will be open by noon of the day before these special events. The previous closure restrictions and Table 1 may be amended by the Engineer or if amended elsewhere in the plans.

Cover, relocate or remove existing signs that conflict with traffic control. Install all permanent signs, delineation, and object markers required for the operation of the roadway before opening to traffic. Use of temporary mounts is allowed or may be required until the permanent mounts are installed or not impacted by construction. Maintain the temporary mounts. This work is subsidiary.

Shadow Vehicle with TMA is required as shown in the TCP sheets and for setup/removal of traffic control devices.

Project Number: **Sheet:**
County: Williamson **Control:**
Highway: RM 1431

Submit an emailed request for a lane closure (LCN) to the TxDOT representative. The email will be submitted in the format provided. Receive concurrence prior to implementation. Submit a cancellation of lane closures a minimum of 18 hours prior to implementation. Blanket requests for extended periods are not allowed. Max duration of a request is 2 weeks prior to requiring resubmittal. Provide 2 hour notice prior to implementation and immediately upon removal of the closure.

For roadways not listed in Table 1: Submit the request a minimum of 48 hours prior to the closure and by the following deadline immediately prior to the closure: 11A on Tuesday or 11A on Friday.

For roadways listed in Table 1: Submit the request 96 hours prior to implementation.

For all roadways: Submit request for traffic detours and full roadway closures 168 hours prior to implementation. Submit request for nighttime work 96 hours to implementation date. Cancellations of accepted closures (not applicable to full closures or detours) due to weather will not require resubmission in accordance with the above restrictions if the work is completed during the next allowable closure time.
Closures that conflict with adjacent contractor will be prioritized according to critical path work per latest schedule. Conflicting critical path or non-critical work will be approved for first LCN submitted. Denial of a closure due to prioritization or other reasons will not be reason for time suspension, delay, overhead, etc.

Meet with the Engineer prior to lane closures to ensure that sufficient equipment, materials, devices, and workers will be used. Take immediate action to modify traffic control, if at any time backup (queuing) becomes greater than 20 minutes. Have a contingency plan of how modification will occur. Consider inclement weather prior to implementing the lane closures. Do not set up traffic control when the pavement is wet.

Place a 28-inch, reflectorized cone meeting requirements of BC (10)-14 on top of foundations that have protruding studs. This work is subsidiary.

Maintain a minimum of 1 through lane in each direction, during the daylight hours, as directed.

Furnish advisory speed signs in enough numbers as directed. To determine an advisory speed limit to post for various curves and ramps within this project notify the Engineer 2 months prior to manufacture of the sign.

ITEM 528, 531 and 536
Reinforcement will be in accordance with Item 432.3.1 unless shown on the plans. Fiber reinforcement is not allowed. Class A and B Concrete are allowed to use Coarse Aggregate Grades 1-8. Expansion joints will be placed every 40 ft. Expansion joints must be 1" wide asphalt board and flush with the surface. The bottom of the joint shall be at half the depth of the concrete. Sidewalk cross slope must not exceed 1.5%.

Unless shown on the plans or in the pay items, all concrete will be 5 in. thick and have 2 in. sand, base, or RAP bedding. Furnish base meeting the requirement for any type or grade in accordance

STATE OF TEXAS
BRIAN DAVID VAN DE WALLE
68525
REGISTERED PROFESSIONAL ENGINEER

10/3/2016

Kimley»Horn
F-928

CEDAR PARK

© 2016 CITY OF CEDAR PARK

ANDERSON MILL AND RM 1431
TRAFFIC SIGNAL
GENERAL NOTES

DES: RPO	CEDAR PARK JOB NO. 067783504	SHEET NO.
CK: BDV		8

with Item 247. Base compressive strengths are waived. RAP must be 100% passing a 1 in. sieve. Bedding must be placed using ordinary compaction.

ITEM 600s – LIGHTING, SIGNING, MARKINGS, AND SIGNALS
Use materials from Material Producer List as shown on the TxDOT website (TxDOT.gov > Business > Resources). Furnish new material as required per Standard Specification.

Meet the requirements of the NEC, Texas MUTCD, TxDOT standards, and TxDOT Standard Specifications. If existing elements shown to remain do not meet the codes or specifications, provide notice to TxDOT.

Provide a 14 day advance email notice to the Engineer to request illumination or traffic signal punch list inspection.

Provide a 14 day advance email notice to Engineer with signal technician contact information and signal locations prior to assuming maintenance and operations of illumination or traffic signal.

Provide a 60 day advance email notice to the Engineer to request signal timing if timing is not provided in the plans.

ITEM 618 - CONDUIT
Fit PVC and HDPE conduit terminations with bell ends.

The locations of conduit and ground boxes are diagrammatic, shift as directed to accommodate field conditions.

Install conduit in an area not exceeding 2 feet in any direction from a straight line.

Install conduit at a minimum depth of 2 ft. below finished grade. Installation of the conduit by jacking or boring method will be at a depth of at least 1 ft. below the bottom of the base material of the roadway.

Install a high tension, non-metallic pull rope in all conduit runs. The pull ropes are for future use. Cap all empty conduit using standard weather tight conduit caps as directed. This work is subsidiary.

Use a coring device when drilling holes through concrete structures.

When using existing conduit, ensure that all conduits have bushings and cleaned of dirt, mud, grease, and other debris. Re-strap existing or relocated conduit per the specification. This work is subsidiary. Replacement of existing conduit that is unusable will be paid using the existing bid items.

ITEM 620 - ELECTRICAL CONDUCTORS
Provide and install 10 amp time delay fuses.

For Flashing Beacons (Item 685) and Pedestal Poles (Item 687), provide single-pole breakaway disconnects. Use Bussman HEBW, Littelfuse LEB, Ferraz-Shawmut FEB, or equal on ungrounded conductors. For all grounded conductors use Bussman HET, Littelfuse LET, Ferraz-Shawmut FEBN, or equal. These breakaway connectors have a white colored marking and a permanently installed solid neutral.

Install a minimum size 8 AWG equipment grounding conductor (EGC) in all conduits including loop detectors and traffic signal cables. Payment and the size of the EGC will be in accordance with standard ED (3)-14 note 12.

Clearly and permanently, mark "illumination" on the luminaire conductors installed in inside a traffic signal pole. Make the marks easily visible from the hand hole.

Identify the conductors as shown on the Electrical Details Standard Sheets when two or more conductors are present in one conduit or enclosure. Use identification tag with two plastic straps. Each tag will indicate circuit number, letter, or other identification as shown on the plans.

ITEM 628 – ELECTRICAL SERVICES
Make arrangements with the utility company for all work and materials provided by the utility company.

The traffic signal system will require 120/240 volt power.

ITEM 666 - RETROREFLECTORIZED PAVEMENT MARKINGS
Notify the Engineer at least 24 hr. before beginning work.

When the raised portion of a profile marking is placed as a separate operation from the pavement marking, the raised portion must be placed first then covered with TY I.

Contractor must replace missing or damaged tabs nightly. If using tabs, place longitudinal markings weekly by 5 AM Friday for all prior work. Failure to maintain temporary markings or place longitudinal markings by deadline will require nightly placement of pavement markings. Place longitudinal markings a minimum of once a week for all prior work for roadways listed in Table 1 of Item 502. Place longitudinal markings within 10 calendar days of placing surface for roadways with ADT greater than 5000. Except for IH 35, deadline may be extended to deadline per Item 662 if surface operations will complete within 7 calendar days.

Placement of markings using mobile operations will be limited to non-peak hours. Peak hours within Austin city limits are Monday thru Friday 6 AM to 10 AM and 2 PM to 7 PM. Peak hours outside Austin city limits are Monday thru Friday 6:30 AM to 9:30 AM and 3:00 PM to 6:30 PM. Peak hours for IH 35 are daily 5 AM to 9 PM.

TY II markings must cure 48 hr. prior to placing TY I markings.

STATE OF TEXAS
BRIAN DAVID VAN DE WALLE
68525
REGISTERED PROFESSIONAL ENGINEER

10/3/2016

Kimley»Horn
F-928

CEDAR PARK

© 2016 CITY OF CEDAR PARK

ANDERSON MILL AND RM 1431
TRAFFIC SIGNAL
GENERAL NOTES

DES: RPO	CEDAR PARK JOB NO. 067783504	SHEET NO.
CK: BDV		9

Reference all existing stripes before commencing work. Obtain approval for placement of guide marks before installing permanent pavement markings. This work is subsidiary.

ITEM 677 - ELIMINATING EXISTING PAVEMENT MARKINGS AND MARKERS
Remove and dispose of off the right of way any existing raised pavement markers and pavement markings, as shown on the plans, before beginning operations. This work is subsidiary.

Black paint/thermo will not be allowed.

ITEM 680 - HIGHWAY TRAFFIC SIGNALS
Obtain City-provided materials from the City of Cedar Park Signal Shop at 2401 Brushy Creek Loop, Cedar Park, TX 78613 after giving a 90 day advance notice to the Signal Engineer at (512) 401-5557.

Provide a 7 day advance notice to the City of Cedar Park Signal Shop at (512) 401-5557, the TxDOT Signal Shop at (512) 832-7012, and the TxDOT Area Office before beginning any work involving traffic signals.

Installation includes all components to provide a fully operational signal.

Remove the existing traffic signal equipment after the new traffic signal is in operation. This work is subsidiary.

Install 250W EQ LED illumination fixtures as shown in the plans. Test in accordance with Item 616. This work is subsidiary

Furnish all materials and install signs mounted on the traffic signal wire, traffic signal poles, mast arms, and pedestal pole assemblies. This work is subsidiary.

Prior to relief of maintenance, perform operation and maintenance in accordance with Item 681.3.1. Response time to reported trouble calls will be less than 2 hours. Make appropriate repairs within 24 hours. Place a logbook in the controller cabinet and keep a record of each trouble call reported. Notify the Engineer of each trouble call. Do not clear the error log in the conflict monitor without approval.

Place the traffic signal into operation after the entire traffic signal has been completed, all required striping is complete, and all conflicting signing is removed. The City of Cedar Park Signal Shop will be present to program the controller and assist with detection setup.

The controller cabinet assembly, including all accessories and components, and all detection equipment (radar, camera, etc.) and processors will be salvaged and delivered to the City of Cedar Park Signal Shop at 2401 Brushy Creek Loop, Cedar Park, TX 78613 upon removal. Provide a 48-hour notice to City of Cedar Park Signal Shop at (512) 401-5557 prior to delivery.

City Supplied Equipment: Install the supplied traffic signal controller and cabinet.

Project Number: **Sheet:**
County: Williamson **Control:**
Highway: RM 1431

Connect all field wiring to the controller assembly. The City or Cedar Park Signal Shop will assist in determining how the detector loop lead-in cables are to be connected, and will also program the controller for operation, program the video detection, hook up the conflict monitor, detector units and other equipment, and turn on the controller. Pick up the signal cabinet from the City or Cedar Park Signal Shop. Have a qualified technician on the project site to place the traffic signals in operation.

Upgrade Closed-Loop System.
Integrate the new traffic signal with an existing closed-loop system to make one system linked by ITS radio communication as shown on the plans. Signal monitor communications are part of the closed-loop system. Communication between the controller and the City Traffic Management Center linked by ITS radio will be transparent to the communication media

ITEM 681 - TEMPORARY TRAFFIC SIGNALS
Maintain 18 ft. vertical clearance.

Place signal heads in accordance with MUTCD.

The City of Cedar Park will continue to operate the signal and provide routine maintenance during construction. The contractor is responsible for repairs and maintenance related to construction activities to commence when the signal system or roadway capacity is affected, or within 30 days after the start of work, whichever comes first. Contact the City of Cedar Park Signal Shop at (512) 401-5557 at least 14 days before assuming maintenance responsibilities.

The scope of this contract will include modifications of existing signal systems as required to support the traffic control plan at the intersection of RM 1431 and Anderson Mill Road.

Provide and maintain traffic signal operation of all signalized intersections within the project limits during all phases of construction whether existing, temporary, or final. The existing signal equipment is to be used as the temporary traffic signal until the proposed signal is installed and operational.

The controller cabinet assembly, including all accessories and components, and all video detection (VIVDS) cameras and processors will be salvaged and delivered to the Cedar Park Signal Shop at 2401 Brushy Creek Loop, Cedar Park, TX 78613at the end of this project. Provide a 48-hour notice to City of Cedar Park Signal Shop at (512) 401-5557 prior to delivery.

Video equipment will be in accordance with SS 6002. The City of Cedar Park will provide signal phasing and timing plans for all construction signals throughout the entire duration of the project. The contractor must notify the City of Cedar Park signal shop at least one week in advance of all traffic switches to make arrangements for timing and detection modifications.

Response time to reported trouble calls will be less than 2 hours. Make appropriate repairs within 24 hours. Place a logbook in the controller cabinet and keep a record of each trouble call reported. Notify the Engineer of each trouble call. Do not clear the error log in the conflict monitor without approval.

STATE OF TEXAS
BRIAN DAVID VAN DE WALLE
68525
REGISTERED PROFESSIONAL ENGINEER

10/3/2016

Kimley»Horn
F-928

CEDAR PARK

© 2016 CITY OF CEDAR PARK

ANDERSON MILL AND RM 1431
TRAFFIC SIGNAL
GENERAL NOTES

DES: RPO	CEDAR PARK JOB NO. 067783504	SHEET NO.
CK: BDV		1·0

Project Number: **Sheet:**
County: Williamson **Control:**
Highway: RM 1431

Adjust or relocate video detection and signal heads as required by project phasing or as directed. This work is subsidiary. Contractor must notify the City of Cedar Park signal shop at least one week in advance of adjusting or moving video detection or signal heads.

Furnish all materials and install signs mounted on the traffic signal wire, traffic signal poles, mast arms, and pedestal pole assemblies. This work is subsidiary.

ITEM 682 – VEHICLE AND PEDESTRIAN SIGNAL HEADS
Install signal head attachments so the wiring to each passes from the signal pole through the attachment hardware to the signal head. Refer to District Standard for more conductor attachment information. Attachment methods not shown on the district standard are to be approved by the Engineer before work begins. Use UV rated tie wraps.

Traffic signal heads will be aluminum or polycarbonate unless otherwise shown on the plans. Back plates will be black aluminum or polycarbonate.

Provide louvers, which have five (5) vanes with a black finish on inside surfaces when required. Fasten a hardware cloth screen, securely, with ⅝" or smaller mesh size to the front face of each louver to prevent bird nesting.

Use the four point mounting system (TY A) for signal heads, except in cases of skewed or vertical heads when (TY B) will be used.

Place the head at the proper angle with the ground. The wording "top" or the "up arrow" indicates the proper fixed alignment within the signal head. Hang the head parallel to the ground once attached and not angled down as with incandescent heads. Ensure the signal head to be level and within tolerances. LED's are designed to direct the indication towards the roadway surface. Variance in head leveling will cause the LED indication to appear dim during slight movement. Ensure each LED head is properly leveled and sight tested before final acceptance.

ITEM 684 – TRAFFIC SIGNAL CABLES
For each cable run, coil an extra 2 ft. of cable in each steel pole and 5 ft. in the controller cabinet.

Provide a separate multi-conductor signal cable (14 AWG) inside pedestal poles and mast-arm signal poles from the terminal strip to each signal head as shown on the plans.

ITEM 686 - TRAFFIC SIGNAL POLE ASSEMBLIES (STEEL)
Provide and install damping plates on all mast arms 40 ft. or greater. For mast arms less than 40 ft., refer to SMA and DMA vibration notes for guidance. This work is subsidiary.

When luminaires are installed on mast arm poles, provide a separate terminal strip in the signal pole access compartment. The terminal strip will be a 4-circuit Buchanan-Type 104SN, Kulka-Type 985-GP-4 CU, or equivalent. Provide a 10-amp time-delay fuse for traffic signal poles which luminaires are installed. Place the fuse in the fuse block indicated within note #4 found on State standard MA-D-12.

Project Number: **Sheet:**
County: Williamson **Control:**
Highway: RM 1431

ITEM 687 – PEDESTAL POLE ASSEMBLIES
Verify the required pole height prior to ordering material.

ITEM 688 - PEDESTRIAN DETECTORS AND VEHICLE LOOP DETECTORS

Test period for the pedestrian detectors shall be in accordance with item 680.3.1.8.

Pedestrian push buttons will be mounted at 42 in. above the walking surface and have permanent type signs within the detector unit (9 in. x 12 in. sign and push button station on signal poles and 5 in. x 7 in. sign and push button station on pedestrian poles), which explains their purpose and indicates which crosswalk signal is actuated.

Provide speech walk message as shown in the plans or per Engineer.

ITEM 6002 - VIDEO IMAGING VEHICLE DETECTION SYSTEM (VIVDS)
Install the VIVDS cameras onto the mast arms with the attachment mechanisms provided with the camera system. Place the traffic signal cable (TY A) (3-conductor) (16 AWG) and the VIVDS communication cable coaxial in continuous and separate runs from each VIVDS camera to the controller. Install a spare Cat 5e Ethernet cable to each VIVD camera location for future upgrades.

Aim and adjust the cameras, install the cables and VIVDS cards into the controller cabinet and complete any other necessary work to bring the traffic signal into operation.

Provide the traffic signal cable and coaxial cable above and any incidentals necessary to install them.

Obtain the VIVDS system components to include the cameras, monitor and cards, from the City of Cedar Park. The VIVDS system also contains the attachment mechanisms needed to attach the cameras to the mast arms. Contact the signal shop supervisor a minimum of two weeks prior to pick up so that arrangements can be made for the equipment.

Payment of the above work will be paid for based upon the foot of VIVDS communication cable installed.

The City of Cedar Park signal shop will install the VIVDS detection zones. Notify the City of Cedar Park signal shop at least one week prior to signal turn-on to assist with the installation of detection zones.

If the camera locations shown in the plans do not allow for proper sight of the proposed detection zones, relocate the cameras as needed and as directed. This labor and material cost will not be paid separately, but is subsidiary to this Item.

STATE OF TEXAS
BRIAN DAVID VAN DE WALLE
68525
REGISTERED PROFESSIONAL ENGINEER

10/3/2016

Kimley»Horn
F-928

CEDAR PARK

© 2016 CITY OF CEDAR PARK

ANDERSON MILL AND RM 1431
TRAFFIC SIGNAL
GENERAL NOTES

DES: RPO	CEDAR PARK JOB NO. 067783504	SHEET NO.
CK: BDV		1·1

Project Number: **Sheet:**
County: Williamson **Control:**
Highway: RM 1431

ITEM 6062 ITS Radio
Provide and install 5.8 GHz ITS Radios as indicated in the plans and compatible with the existing City of Cedar Park traffic signal wireless network. Connect radio and/or antenna to pole as directed by the Engineer.

Install the cable so that none of it is exposed.

When the Engineer determines that the work required by this item is complete and communications has been established to the central control, a 60-day test period will commence. When the entire communications system has operated continuously and satisfactorily for at least 60 days, the Contractor will be released from further maintenance of this item, in writing.

Required Items for ITEM 6002 - VIDEO IMAGING VEHICLE DETECTION SYSTEM:

Spec. Item	Description	Not Required	Required	City Supplied
2.6	REMOTE COMMUNICATIONS LINK			**1**
5.0	VIVDS PROCESSOR UNIT			**1**
6.0	CAMERA ASSEMBLY			**4**
7.0	FIELD COMMUNICATION LINK			
	6 Twisted-Pair Cable / 18 AWG	**X**		
	Coaxial Cable w/Three (3) 16 AWG CNDRS		**1,350**	
	Fiber Optic Cable	**X**		
	Shielded Cat 5E (future upgrades)		**1,500**	
8.0	VIVDS SET-UP SYSTEM			
	Field PC	**X**		
	Field Software for District Shop laptops	**X**		
	Field Video Monitor /Ea. Inter.			**1**
9.0	TEMPORARY USE AND RETESTING	**X**		
10.0	OPERATION FROM CENTRAL CONTROLLER			
	Workstation Computer & Peripherals	**X**		
	Central Control Software	**X**		
11.0	INSTALLATION AND TRAINING			
	Eight (8) Hours	**X**		
	Sixteen (16) Hours	**X**		

Project Number: **Sheet:**
County: Williamson **Control:**
Highway: RM 1431

The list of material below is for the Contractor's information only.
It is the responsibility of the Contractor to verify
all items and quantities listed below.

LIST OF MATERIAL/LABOR
SUBSIDIARY TO ITEM 680

DESCRIPTION	UNIT	QUANTITY
CONCRETE PAD (CITY TYPE CONTROLLER BASE)	SF	72
INSTALL CITY SUPPLIED CONTROLLER CABINET	EA	1
RELOCATE EXISTING ILSN SIGNS TO NEW ARMS	EA	2
FLASHING YELLOW ARROW SIGNS ON MAST ARMS	EA	4
LANE ASSIGNMENT SIGNS ON MAST ARMS	EA	1
PEDESTRIAN PUSHBUTTON SIGNS	EA	8
8' LED LUMINAIRES AND ARMS	EA	4

LIST OF MATERIAL
FURNISHED BY THE CITY OF CEDAR PARK

DESCRIPTION	UNIT	QUANTITY
CABINET ASSEMBLY WITH ACCESSORIES	EA	1
VIVDS CAMERA ASSEMBLIES	EA	4
VIVDS PROCESSOR CARDS (4 CHANNEL)	EA	2
VIVDS EXTENSION MODULES (4 CHANNEL)	EA	2
VIVDS PROCESSOR SYSTEM SETUP	LS	1
VIVDS MINI-HUBS (4 CHANNEL)	EA	1
VIVDS VIDEO MONITORS	EA	1
VIVDS SURGE SUPRESSION PANELS	EA	1
MANAGED HARDENED ETHERNET SWITCH	EA	1
POWER SUPPLY (FOR ETHERNET SWITCH)	EA	1

STATE OF TEXAS
BRIAN DAVID VAN DE WALLE
68525
REGISTERED PROFESSIONAL ENGINEER

10/3/2016

Kimley»Horn
F-928

CEDAR PARK

© 2016 CITY OF CEDAR PARK

ANDERSON MILL AND RM 1431
TRAFFIC SIGNAL
GENERAL NOTES

DES: RPO	CEDAR PARK	SHEET NO.
CK: BDV	JOB NO. 067783504	12

THIS PAGE INTENTIONALLY LEFT BLANK

10/3/2016

Kimley»Horn

F-928

© 2016 CITY OF CEDAR PARK

ANDERSON MILL AND RM 1431
TRAFFIC SIGNAL

GENERAL NOTES

DES: RPO	CEDAR PARK JOB NO. 067783504	SHEET NO.
CK: BDV		1·3

U:\156402_Anderson Mill Rd Illumination\CADD\T1Y1_AM_Notes_193A.dgn 10/5/2016 4:19:05 PM FJR

GENERAL NOTES:

1. THE SCOPE OF WORK INCLUDES INSTALLATION OF ELECTRICAL SERVICES AS NEEDED TO SERVE NEW STREET LIGHTING THROUGHOUT THE PROJECT. THE CONTRACTOR SHALL PROVIDE AND INSTALL A COMPLETE FUNCTIONING ELECTRICAL SYSTEM CONSISTING OF REQUIRED ELECTRICAL COMPONENTS BUT NOT NECESSARILY LIMITED TO POWER CABINET, PANEL BOARDS, LIGHTING CONTRACTORS, CONDUITS, RACEWAYS, WIRES, CABLES, FITTINGS, TESTING OF INSTALLED SYSTEMS, EXCAVATION, AND COORDINATION WITH POWER COMPANY AND OTHER TRADES.

2. THE CONTRACTOR SHALL VISIT THE SITE AND FULLY INFORM THEMSELVES OF ALL CONDITIONS THAT EFFECT THE WORK OR COST THEREOF. CONTRACTOR SHALL EXAMINE THE DRAWINGS AND SPECIFICATIONS AS RELATED TO THE SITE CONDITIONS. CONTRACTOR SHALL VERIFY THE CONDITION OF THE EXISTING ELECTRICAL DISTRIBUTION SYSTEM AND COMPARE WITH THAT SHOWN ON THE PLANS. ANY DISCREPANCY SHALL BE REPORTED TO THE ENGINEER.

3. CONSIDERATION SHALL NOT BE GRANTED FOR ANY ALLEGED MISUNDERSTANDING OF THE AMOUNT OF WORK TO BE PREFORMED. TENDER OF A PROPOSAL SHALL CONVEY FULL AGREEMENT TO ALL ITEMS CONDITIONS SPECIFIED, INDICATED ON THE DRAWINGS, AND/OR REQUIRED BY NATURE OF THE SITE.

4. SHOULD CONTRACTOR FIND DISCREPANCIES OR OMISSIONS IN THE CONTRACT DOCUMENTS, OR BE IN DOUBT AS TO THE INTENT THEREOF, HE SHALL IMMEDIATELY OBTAIN CLARIFICATION FROM THE ENGINEER PRIOR TO CONSTRUCTION.

5. TIMELY PLACING OF MATERIAL & EQUIPMENT: ALL ELECTRICAL APPARATUS SHALL BE INSTALLED AT THE PROPER TIME DURING PROGRESS OF CONSTRUCTION. COORDINATE WORK OPERATIONS WITH OTHER CRAFTS.

6. DELIVER ALL PRINTED INSTRUCTIONS, CERTIFIED SHOP DRAWINGS, PARTS LISTS, CERTIFICATES, ETC., SUPPLIED WITH EQUIPMENT ITEMS, TO THE OWNER REPRESENTATIVE FOR APPROVAL.

7. CODES, PERMITS AND FEES:
   - A. ALL WORK SHALL COMPLY WITH THE LATEST EDITION OF NATIONAL ELECTRICAL CODE (NEC & NESC).
   - B. OBTAIN ALL REQUIRED PERMITS AND PAY ALL FEES FOR PERMITS & INSPECTIONS BY THE CITY OR OTHER AGENCIES/OWNERS.
   - C. ALL WORK SHALL COMPLY WITH THE REQUIREMENTS OF THE CITY OF CEDAR PARKS TEXAS.

8. TAKE ALL PRECAUTIONS NECESSARY FOR PROPER PROTECTION OF NEW AND EXISTING EQUIPMENT AND MATERIALS FROM DAMAGE. FAILURE TO DO SO SHALL BE CAUSE FOR REMAKE AND REPLACEMENT AT THE CONTRACTOR'S EXPENCE.

9. CONTRACTOR SHALL SUBMIT SHOP DRAWINGS AND CATALOG DATA ON ALL MAJOR ITEMS OF EQUIPMENT AND SYSTEMS AND OTHER MATERIAL REQUESTED BY OWNER. SUBMIT SIX COPIES WITHIN THIRTY (30) DAYS AFTER CONTRACT AWARD, AND IN NOT MORE THAN TWO GROUPS OF SUBMITTALS. SUBMITTALS SHALL CONSIST OF CUT SHEETS, AND OPERATING AND PERFORMANCE DATA. ALLOW TEN (10 WORKING) DAYS FOR REVIEW AND APPROVAL OF THE SHOP DRAWINGS BY THE ENGINEER.

10. ALL MATERIALS AND EQUIPMENT SHALL BE NEW, OF BEST GRADE OF STANDARD MANUFACTURE AND APPROVED BY UL, AND BE SO LABELED. FOR WIRE AND CABLE, MARKED AS REQUIRED BY ART. 310. NEC, AND INSTALLED BY SKILLED ELECTRICIANS, WORKING UNDER THE DIRECTSUPERVISION OF COMPETENT AND EXPERIENCED FOREMAN AND/OR SUPERINTENDENT. PRODUCTS SHALL BEINSTALLED IN A THOROUGH WORKMANLIKE MANNER,PRESENTING A NEAT, CLEAN-CUT APPEARANCE WHENCOMPLETED, ANY PART OR PARTS NOT MEETING THIS REQUIREMENT SHALL BE REPLACED OR REBUILTWITHOUT EXTRA EXPENSE TO OWNER.

11. THE DRAWINGS ARE DIAGRAMMATIC AND ARE INTENDED TO SHOW THE GENERAL LOCATIONS OF EQUIPMENT AND ARRANGEMENT OF CIRCUITS ONLY. EXACT LOCATIONS SHALL BE DETERMINED BY ACTUAL MEASUREMENT AT THE SITE. CONTRACTOR SHALL BE FULLY RESPONSIBLE FOR ALL RISES, DROPS, OFFSETS, ETC. NECESSARY TO AVOID CONFLICT WITH EXISTING AND NEW PROPOSED UTILITY LINES & SIMILAR ITEMS. WHEN INSTALLING ELECTRICAL CONDUITS INSTALL EXPOSED CONDUIT AS SHOWN OR NOTED.PARALLEL TO HORIZONTAL AND VERTICAL LINES OF SITE. MAKE BENDS WITH 90 DEGREE TURN MAXIMUM, OR WITH APPROVED FITTINGS.

12. FURNISH A COMPLETE RACEWAY SYSTEM FOR BUT NOT LIMITED TO FEEDER, BRANCH CIRCUITS,CONTROL WIRING, AND AUXILARY SYSTEM WIRING. RACEWAY SYSTEMS INSTALLED SHALL BE APPROVED FOR OUTDOOR USE.
   - A. USE LIQUIDTIGHT FLEXIBLE METAL CONDUIT AND FITTINGS WHERE THE EQUIPMENT IS SUBJECT TO MOVEMENT, OR LOCATED OUTDOORS.
   - B. USE OF EMT IS NOT PERMITTED. USE RIDGID GALVANIZED CONDUIT FOR ALL EXPOSED OUTDOOR LOCATIONS.
   - D. BENDS AND OFFSETS MADE WITH APPROVED TOOLS ONLY. BENDS OR OFFSETS IN WHICH THE PIPE IS CRUSHED OR DEFORMED SHALL NOT BE INSTALLED.
   - E. WHERE NOT EMBEDDED IN CONCRETE OR MASONRY, RACEWAY SHALL BE FIRMLY SECURED BY APPROVED CLAMPS, STRAPS, OR HANGERS.
   - F. USE SCHEDULE 80 PVC CONDUIT FOR INSTALLATION UNDER SIDEWALKS. USE SCHEDULE 80 PVC CONDUIT UNDER ROADWAYS.

13. FURNISH AND INSTALL ALL JUNCTION BOXES OTHER OUTLETS REQUIRED TO FACILITATEINSTALLATION OF VARIOUS CONDUIT SYSTEMS. BOXES SHALL BE APPROVED FOR INTENDED USE AND APPLICATION.

14. ALL WIRE AND CABLE SHALL:
   - A. UNLESS OTHERWISE SPECIFIED OR NOTED; WIRE THAT SHALL BE COPPER CABLE/WIRE THAT MEETS UL STANDARD 44 AND FEDERAL SPECIFICATIONS A-A 5944 TYPE XHHW-2 AS MANUFACTURED BY TRIANGLE, GENERAL ELECTRIC, OKONITE, ANACONDA OR APPROVED EQUAL.
   - B. BE STRANDED, IN NO. 8 AWG AND LARGER.
   - C. NOT BE PULLED INTO A CONDUIT UNTIL ALL WORK WHICH MAY CAUSE INJURY IS COMPLETE. WHERE TWO OR MORE CIRCUITS RUN TO A SINGLE OUTLET BOX, TAG EACH CIRCUIT.
   - D. HAVE ALL STRANDED CONDUCTORS FURNISHED WITH COPPER CONNECTING LUGS, SIZED FOR THE FULL DIAMETER OF THE BARE CONDUCTORS.

15. INDENTIFICATION OF CONDUCTORS AND PANEL BOARD ELEMENTS.
   - A. EACH AND EVERY MAIN AND FEEDER CONDUCTOR SHALL BE IDENTIFIED AT EACH OUTLET POINT WHERE SUCH CONDUCTOR TERMINATES. FEEDER BUNDLES PASSING THROUGH A JUNCTION OR SUPPORT BOX SHALL ALSO BE INDENTIFIED WITHIN SUCH ENCLOSURE, BUT MAY BE INDENTIFIED IN SUCH LOCATIONS AS A GROUP.
   - B. INDENTIFY BY USE OF PERMANENT TYPE BANDS. BRADY, OR T AND B. THE ALPHA NUMERIC WIRE NUMBER NOTED IN THE DRAWINGS SHALL BE EMPLOYED AND BE UNIFORM THROUGHOUT EACH CONDUCTOR.
   - C. INDENTIFY EACH SWITCH. INCLUDING MAIN DISCONNECT WITH WHITE-ON-BLACK NAMEPLATE, EACH HAVING 1/4" HIGH LETTERS. NEATLY AND SECURELY ADHERE NAMEPLATE TO THE UNIT.
   - D. INDENTIFY EACH DEVICE WITH NAMEPLATE SHOWING THE SOURCE TAG NUMBER.

16. FURNISH AND INSTALL WIRING DEVICES AS INDICATED ON THE DRAWINGS, DEVICES FURNISHED SHALL IN ALL CASES BE SUITABLE FOR THE USE INTENDED AND SHALL HAVE VOLTAGE AND CURRENT RATINGS ADEQUATE FOR THE LOADS TO BE SERVED.
   - A. MOUNTING HEIGHTS OF ALL DEVICES ARE FROM FINISH GRADE TO BOTTOM OF DEVICE.
   - B. INSTALL WIRING DEVICES AND ACCESSORIES PLUMB AND LEVEL IN ACCORDANCE WITH MANUFACTURER'S WRITTEN INSTRUCTIONS, APPLICABLE REQUIREMENTS OF NEC AND IN ACCORDANCE WITH RECOGNIZED INDUSTRY PRACTICES TO FULFILL PROJECT REQUIREMENTS.
   - C. TIGHTEN CONNECTORS AND TERMINALS INCLUDING SCREWS AND BOLTS, IN ACCORDANCE WITH EQUIPMENT MANUFACTURER'S PUBLISHED TORQUE VALUES FOR WIRING DEVICES.
   - D. COORDINATE AS NECESSARY TO INTERFACE INSTALLATION OF WIRING DEVICES WITH OTHER WORK.
   - E. INSTALL WIRING DEVICES AFTER WORK IS COMPLETED. INSTALL ONLY IN ELECTRICAL BOXES THAT ARE CLEAN FREE, FROM EXCESS BUILDING MATERIALS, DIRT AND DEBRIS.

17. PANELBOARDS SHALL BE SQUARE D TYPE QO OR APPROVED EQUAL, REFER TO CONSTRUCTION DOCUMENTS FOR THE TYPE AND NUMBER OF BRANCH CIRCUIT BREAKERS, ALL PANELBOARD BUSING SHALL BE COPPER. PANELBOARDS SHALL BE IN OUTDOOR ENCLOSURE WHERE INSTALLED OUTDOORS MINIMUM INTERRUPTING RATING FOR PANELS SHALL BE 22 kA.

18. FUSES IN MAIN, FEEDER, AND BRANCH CIRCUIT SWITCHES SHALL BE RATED 600 AMPS AND BELOW. FEEDINGMOTORS, TRANSFORMERS, AND GENERAL PURPOSE CIRCUITS (UNLESS OTHERWISESPECIFIED) SHALL BE UL LISTED AND LABELED AS CURRENT LIMITING. TIME DELAY, 200 kAIC.CLASS RK-5 FUSES SHALL BE BUSSMAN TYPE FRN-R (250V). AND FRS-R (600V).

19. GROUNDING: ALL METALLIC CONDUIT, AND OTHER ELECTRICAL EQUIPMENT, WIRED AND CONNECTED BY CONTRACTOR SHALL BE EFFECTIVELY AND PERMANENTLY GROUNDED IN FULL ACCORDANCE WITH NEC 250.

20. ALL GROUNDING COPPER CONDUCTORS SHALL NOT BE LESS THAN NO.6 AWG.

21. PEC TO INSTALL NEW LUMINARIES AS INDICATED ON PLANS.

22. CONDUIT ROUTING IS SCHEMATIC IN NATURE. ADJUST ROUTING TO AVOID CONFLICTS WITH OTHER UTILITIES AND STRUCTURAL FEATURES.

23. FOR GROUND BOX DETAILS SEE DRAWING 176, DETAIL 2.

24. TO ASSURE WATERPROOF INTEGRITY, SPLICES MADE IN GROUND BOXES SHALL BE INSULATED WITH HEAT SHRINK OR COLD SHRINK TUBING OR SCOTCH CAST KITS APPROPRIATE FOR THE CONDUCTOR SIZE.

25. CONDUCTORS PASSING THROUGH A GROUND BOX SHALL BE INSTALLED WITH A LOOP OF SLACK, TUCKED INTO THE BOX.

26. CONDUCTORS SHALL BE GROUPED BY CIRCUIT AND IDENTIFIED WITH PERMANENT TAGS IN EACH GROUND BOX.

27. THE CONTRACTOR IS RESPONSIBLE FOR LOCATION AND VERIFYING ALL EXISTING UTILITY IN THE FIELD PRIOR TO CONSTRUCTION.

28. ANY REQUEST FOR OR INSTALLATION OF EQUIPMENT NOT DETAILED OR SHOWN OR REFERED TO ON THE PLANS OR SUBMITTED AS SHOP DRAWINGS FOR REVIEW SHALL BE SUBMITTED TO AND APROVED IN WRITING BY THE ENGINEER PRIOR TO CONSTRUCTION.

29. SEE GENERAL NOTES IN THE COSTRUCTION DRAWINGS FOR ANDERSON MILL ROAD FOR ADDITIONAL.

NUMBER	DATE	REVISION	APPROVED

CEDAR PARK

Binkley &Barfield, Inc.
consulting engineers
Texas Registration Number F-257
1705 Spring St. Ave.
Williamson Texas 78608-3189
(713) 886-3433 (713) 869-6702 FAX

SEAL
STATE OF TEXAS
KEVIN LEE PRAYTOR
121834
LICENSED PROFESSIONAL ENGINEER
10/5/16

ANDERSON MILL ROAD
GASPAR BEND TO WHITESTONE BLVD

GENERAL LIGHTING NOTES

DESIGN BY:	KWR	SCALE:	1"=40'
DRAWN BY:	FJR		
CHECKED BY:	DRE		
APPROVED BY:	BDR	SHEET:	
PROJECT NO:	156402		
DATE:	10/5/2016	PAGE:	14

Half_PDF_Lighter.plt
Electric_pen.tbl

REMOVAL QUANTITIES

BID ITEM		101S-B	104S-A *	104S-B	104S-C *	104S *	TXDOT ITEM 105 6023 *	TXDOT ITEM 496 6002 *	TXDOT ITEM 496 6004 *	TXDOT ITEM 496 6006 *	TXDOT ITEM 496 6007 *
SHEET	STATION	PREPARING THE RIGHT OF WAY	REMOVE PC CONCRETE CURB	REMOVE PC CONCRETE SLAB	REMOVE PC CONCRETE SIDEWALKS & DRIVEWAYS	REMOVE STONE BLOCKS AND BOULDERS	REMOVING STAB BASE AND ASPH PAV (5")	REMOVE STR (INLET)	REMOVE STR (SET)	REMOVE STR (HEADWALL)	REMOVE STR (PIPE)
		STA	LF	SF	SF	EA	SY	EA	EA	EA	LF
SHEET 1 OF 5	BEGIN - 109+40	7.5	598		474	3	2,400	1	1		52
SHEET 2 OF 5	109+40 - 127+00	17.6	150		3,723		4,546			1	30
SHEET 3 OF 5	127+00 - 144+60	17.6					4,058				
SHEET 4 OF 5	144+60 - 162+20	17.6		13,374		11	4,640				
SHEET 5 OF 5	162+20 - END	15.8	243			11	5,360		4		55
PROJECT TOTAL		**76.1**	**991**	**13,374**	**4,197**	**25**	**21,004**	**1**	**5**	**1**	**137**

* FOR CONTRACTOR'S INFORMATION ONLY - SUBSIDIARY TO ITEM 101S-B AND 110S-A

REMOVAL QUANTITIES (CONT)

BID ITEM		TXDOT ITEM 512 6057 *	702S-H	TXDOT SP5045-MB	702S-G	TXDOT ITEM 546 6001 *	824S	874S-A4	874S-A8	874S-A24	874S-D	TXDOT ITEM 6120 6001
SHEET	STATION	PORT CTB (REMOVE) (LOW PROF) (TY 1)	REMOVING & RELOCATING EXISTING METAL GATE	RELOCATE OR REMOVE AND REPLACE MAILBOX	REMOVING AND RELOCATING EXISTING WIRE FENCE	REMOVE METAL BEAM GUARD FENCE	REMOVE EXIST TRAFFIC SIGN	ELIMINATING EXIST PAVEMENT MARKINGS 4" IN WIDTH	ELIMINATING EXIST PAVEMENT MARKINGS 8" IN WIDTH	ELIMINATING EXIST PAVEMENT MARKINGS 24" IN	ELIMINATING EXIST PAVEMENT MARKINGS, SYMBOLS	DEAD END ROADWAY BARRICADE
		LF	EA	EA	LF	LF	EA	LF	LF	LF	EA	LF
SHEET 1 OF 5	BEGIN - 109+40					105	4	755			3	
SHEET 2 OF 5	109+40 - 127+00	260	1	1	238		6					
SHEET 3 OF 5	127+00 - 144+60		1				8					16
SHEET 4 OF 5	144+60 - 162+20		1		607		2					16
SHEET 5 OF 5	162+20 - END				1,108		3	270	336	36		
PROJECT TOTAL		**260**	**3**	**1**	**1,953**	**105**	**23**	**1,025**	**336**	**36**	**3**	**32**

* FOR CONTRACTOR'S INFORMATION ONLY - SUBSIDIARY TO ITEM 101S-B AND 110S-A

NOTE:

1. TEMPORARY PAVEMENT SHALL CONSIST OF 2" HMAC OVER 5" FLEX BASE AND WILL BE PAID FOR BY TXDOT ITEM 508-6001 - CONSTRUCTING DETOURS.

TRAFFIC CONTROL PLAN QUANTITIES

BID ITEM		TXDOT ITEM 508 6001	TXDOT ITEM 512 6009	TXDOT ITEM 512 6010	TXDOT ITEM 512 6057	TXDOT ITEM 512 6058	802S	803S	870S-A-4W	870S-A-4Y	870S-A-6W	SP803S-MB
SHEET	STATION	CONSTRUCTING DETOURS	PORT CTB (FUR & INST) (LOW PROF) (TY 1)	PORT CTB (FUR & INST) (LOW PROF) (TY 2)	PORT CTB (REMOVE) (LOW PROF) (TY 1)	PORT CTB (REMOVE) (LOW PROF) (TY 2)	CIP PROJECT SIGN	BARRICADES, SIGNS AND TRAFFIC HANDLING	WORK ZONE PAVEMENT MARKINGS (REMOVEABLE) 4 IN W (SOLID)	WORK ZONE PAVEMENT MARKINGS (REMOVEABLE) 4 IN Y (SOLID)	WORK ZONE PAVEMENT MARKINGS (REMOVEABLE) 6 IN W (SOLID)	PORTABLE CHANGEABLE MESSAGE SIGN
		SY	LF	LF	LF	LF	EA	LS	LF	LF	LF	EA
PHASE 1												
SHEET 1 OF 5	BEGIN - 109+40	21					1		487	723		1
SHEET 2 OF 5	109+40 - 127+00	187							986	986		
SHEET 3 OF 5	127+00 - 144+60											
SHEET 4 OF 5	144+60 - 162+20											
SHEET 5 OF 5	162+20 - END						1					1
PHASE 1 TOTAL		**208**	**0**	**0**	**0**	**0**	**2**	**-**	**1473**	**1709**	**0**	**2**
PHASE 1A												
SHEET 1 OF 5	BEGIN - 109+40								977	1,569		
SHEET 2 OF 5	109+40 - 127+00	758							1,317	2,173		
SHEET 3 OF 5	127+00 - 144+60	1233	80	40	80	40			2,028	2,028		
SHEET 4 OF 5	144+60 - 162+20	842							452	2,378		
SHEET 5 OF 5	162+20 - END	57							3,134	3,082		
PHASE 1A TOTAL		**2890**	**80**	**40**	**80**	**40**	**0**	**-**	**7908**	**11230**	**0**	**0**
PHASE 2												
SHEET 1 OF 5	BEGIN - 109+40									1,728		
SHEET 2 OF 5	109+40 - 127+00								1,507	3,504	90	
SHEET 3 OF 5	127+00 - 144+60								2,112	2,950	15	
SHEET 4 OF 5	144+60 - 162+20								1,060	2,388	196	
SHEET 5 OF 5	162+20 - END								1,610	3,080	150	
PHASE 2 TOTAL		**0**	**0**	**0**	**0**	**0**	**0**	**-**	**6289**	**13650**	**451**	**0**
PROJECT TOTAL		**3,098**	**80**	**40**	**80**	**40**	**2**	**1**	**15,670**	**26,589**	**451**	**2**

NUMBER	DATE	REVISION	APPROVED

STATE OF TEXAS
GREGORY C. CALKINS
111309
LICENSED
PROFESSIONAL ENGINEER
10/06/2016

CEDAR PARK

Binkley & Barfield, Inc
consulting engineers
Texas Registration Number F-257

ANDERSON MILL ROAD
GASPAR BEND TO WHITESTONE BLVD

QUANTITY SUMMARY

DESIGN BY:	GCC	SCALE: NTS	
DRAWN BY:	DSH		
CHECKED BY:	DRE		
APPROVED BY:	BDR	SHEET:	
PROJECT NO:	156402		
DATE:	10/6/2016	PAGE: 15	

10/6/2016
8:47:23 AM
...\CADD\SHEETS\GNSR1*AM*01.dgn

ROADWAY QUANTITIES

BID ITEM		110S-A	132S-A	210S-A	210S-A	210S-A	306S *	340S-B	340S-B	360S-A	430S-B	TXDOT ITEM 529-6008	430S-D	430S-D (MOD)	TXDOT ITEM 432-6001	TXDOT ITEM 529 6001	432S-4	432S-RP-1	TXDOT ITEM 531-6004	TXDOT ITEM 531-6005
SHEET	STATION	STREET EXCAVATION	EMBANKMENT	FLEXIBLE BASE 15"	FLEXIBLE BASE 8"	FLEXIBLE BASE 6"	PRIME COAT	HOT MIX ASPHALTIC CONCRETE PAVEMENT, 1.5", TYPE D	HOT MIX ASPHALTIC CONCRETE PAVEMENT, 6", TYPE D	11" CONCRETE PAVEMENT	P.C. CONCRETE CURB AND GUTTER (FINE GRADING)	CONC CURB & GUTTER TY II	P.C. CONCRETE CURB (FINE GRADING)	P.C. CONCRETE CURB (MOD)	RIPRAP CONC (4")	CONC CURB 2" HEIGHT (TY 1)	NEW P.C. CONCRETE SIDEWALKS 4 INCH THICKNESS	P.C. SIDEWALK CURB RAMP WITH PAVERS (TYPE I)	CURB RAMPS TYPE 1	CURB RAMPS TYPE 2
		CY	CY	SY	SY	SY	GAL	SY	SY	SY	LF	LF	LF	LF	CY	LF	SF	EA	EA	EA
SHEET 1 OF 18	BEGIN - 105+00			307			54		271		784			94			266			
SHEET 2 OF 18	105+00 - 109+40	694	160	2,738			479		2,396		880			880			2,221			
SHEET 3 OF 18	109+40 - 113+80	1,247	292	3,250	37		553	38	2,765		862			789		15	2,106	1		
SHEET 4 OF 18	113+80 - 118+20	1,733	151	3,351			611		3,056		859				5		1,263	1		
SHEET 5 OF 18	118+20 - 122+60	1,812	760	1,607			281		1,404		404					60	3,293			
SHEET 6 OF 18	122+60 - 127+00	2,858	5	1,565			274		1,369		440						3,081			
SHEET 7 OF 18	127+00 - 131+40	1,339	172	1,564	92		274	85	1,369		440						3,081			
SHEET 8 OF 18	131+40 - 135+80	3,705	37	1,539			270		1,348		427						2,954			
SHEET 9 OF 18	135+80 - 140+20	992	339	1,854			350		1,750		32						2,556			
SHEET 10 OF 18	140+20 - 144+60	3,523	304	1,791	687	1,296	339		1,695	1,224	180						2,040			
SHEET 11 OF 18	144+60 - 149+00	2,340	266	3,217			515		2,574		1,121						2,640			
SHEET 12 OF 18	149+00 - 153+40	1,358	149	2,318	429		278	412	1,389		880						2,525			
SHEET 13 OF 18	153+40 - 157+80	3,224	354	2,702			342		1,711		1,160						2,641			
SHEET 14 OF 18	157+80 - 162+20	4,125	48	2,941	335		457		2,285		1,034						2,253			
SHEET 15 OF 18	162+20 - 166+60	2,077	19	3,026	476		499		2,494		1,087		230				2,295			
SHEET 16 OF 18	166+60 - 171+00	2,415	99	4,335	435		775		3,876		1,197						1,896			
SHEET 17 OF 18	171+00 - 175+40	3,324	124	4,742	223		832		4,162		1,647						2,640			
SHEET 18 OF 18	175+40 - END	2,430	51	2,907			499		2,493		671	187				154	1,318		2	1
PROJECT TOTAL		**39,196**	**3,330**	**45,756**	**2,714**	**1,296**	**7,681**	**535**	**38,407**	**1,224**	**14,105**	**187**	**230**	**1,763**	**5**	**229**	**41,068**	**2**	**2**	**1**

* FOR CONCTRACTORS INFORMATION ONLY - SUBSIDIARY TO ITEM 340S

ROADWAY QUANTITIES CON'T

BID ITEM		TXDOT ITEM 531 6010	TXDOT ITEM 531 6016	TXDOT ITEM 531 6017	TXDOT ITEM 531 6013	433S-C	434S	480S-NS	TXDOT ITEM 514 6013	701S-H	701S-CS	432-PRC-4	TXDOT ITEM 450 6030
SHEET	STATION	CURB RAMPS TYPE 7	CURB RAMPS TYPE 21	CURB RAMPS TYPE 22	CURB RAMPS TYPE 10	TYPE II P.C. CONCRETE DRIVEWAY	4 INCH P.C. CONCRETE MEDIANS AND ISLANDS	CONCRETE PAVER UNITS FOR SIDEWALK AND STREETSCAPES	PERM CTB (F-SHAPE) (TY1)	VINYL COATED CHAIN LINK SECURITY FENCE 6FT	CHAIN LINK VEHICULAR SINGLE SWING GATE, 6 FOOT x 8 FOOT	PEDESTRIAN ADA RAILING OPTION 3 (STANDARD 707-4)	RAIL (TY C221)
		EA	EA	EA	EA	SF	SF	SF	LF	LF	EA	LF	LF
SHEET 1 OF 18	BEGIN - 105+00						107	1,320				55	2
SHEET 2 OF 18	105+00 - 109+40												444
SHEET 3 OF 18	109+40 - 113+80						25	1,303				72	60
SHEET 4 OF 18	113+80 - 118+20											66	
SHEET 5 OF 18	118+20 - 122+60								171	263	2	128	
SHEET 6 OF 18	122+60 - 127+00								440	440			
SHEET 7 OF 18	127+00 - 131+40								440	440			
SHEET 8 OF 18	131+40 - 135+80								427	423			
SHEET 9 OF 18	135+80 - 140+20								210	398			
SHEET 10 OF 18	140+20 - 144+60	2				6,315	16						
SHEET 11 OF 18	144+60 - 149+00						229	803					
SHEET 12 OF 18	149+00 - 153+40												
SHEET 13 OF 18	153+40 - 157+80								280				
SHEET 14 OF 18	157+80 - 162+20	2				3,146	163	284	434				
SHEET 15 OF 18	162+20 - 166+60	2				4,183	206	1,342	440				
SHEET 16 OF 18	166+60 - 171+00				2	4,311	311	65	100				
SHEET 17 OF 18	171+00 - 175+40					2,150	289	533					
SHEET 18 OF 18	175+40 - END		1	1			241	510					
PROJECT TOTAL		**6**	**1**	**1**	**2**	**20,105**	**1,587**	**6,160**	**2,942**	**1,964**	**2**	**321**	**506**

NUMBER	DATE	REVISION	APPROVED

STATE OF TEXAS
GREGORY C. CALKINS
111309
LICENSED
PROFESSIONAL ENGINEER
10/06/2016

CEDAR PARK

Binkley & Barfield, Inc
consulting engineers
Texas Registration Number F-257

ANDERSON MILL ROAD
GASPAR BEND TO WHITESTONE BLVD

QUANTITY SUMMARY

DESIGN BY: GCC
DRAWN BY: DSH
CHECKED BY: DRE
APPROVED BY: BDR
PROJECT NO: 156402
DATE: 10/6/2016

SCALE: NTS
SHEET:
PAGE: 16

10/6/2016
8:47:24 AM
...\CADD\SHEETS\GNSR1*AM*02.dgn

ROADWAY QUANTITIES CON'T

BID ITEM		TXDOT ITEM 423 6008	TXDOT ITEM 423 6008	TXDOT ITEM 423 6008	TXDOT ITEM 423 6008	TXDOT ITEM 423 6008	TXDOT ITEM 423 6008
SHEET	STATION	CAST-IN-PLACE CUT OFF WALL	SIDEWALK TURNDOWN	CAST-IN-PLACE RET WALL (RET01)	CAST-IN-PLACE RET WALL (RET02)	CAST-IN-PLACE RET WALL (RET03)	CAST-IN-PLACE RET WALL (RET04)
		SF	SF	SF	SF	SF	SF
SHEET 1 OF 18	BEGIN - 105+00		21	3			
SHEET 2 OF 18	105+00 - 109+40			1,321	467		
SHEET 3 OF 18	109+40 - 113+80	31	77	315	336		
SHEET 4 OF 18	113+80 - 118+20	20				663	160
SHEET 5 OF 18	118+20 - 122+60						638
SHEET 6 OF 18	122+60 - 127+00						
SHEET 7 OF 18	127+00 - 131+40						
SHEET 8 OF 18	131+40 - 135+80						
SHEET 9 OF 18	135+80 - 140+20						
SHEET 10 OF 18	140+20 - 144+60						
SHEET 11 OF 18	144+60 - 149+00						
SHEET 12 OF 18	149+00 - 153+40						
SHEET 13 OF 18	153+40 - 157+80						
SHEET 14 OF 18	157+80 - 162+20						
SHEET 15 OF 18	162+20 - 166+60						
SHEET 16 OF 18	166+60 - 171+00						
SHEET 17 OF 18	171+00 - 175+40						
SHEET 18 OF 18	175+40 - END						
PROJECT TOTAL		51	98	1,639	803	663	798

SIGNING AND STRIPING QUANTITIES

BID ITEM		824S	TXDOT ITEM 644 6068	871S-A4BW	871S-A4SW	871S-A8SW	871S-A12SW	871S-A24SW	871S-A4Y	871S-A4DW
SHEET	STATION	TRAFFIC SIGN	RELOCATE SM RD SN SUP&AM TY 10BWG	REFLECT TY I THERMOPLAST PVMT MARKING 4" 100 MILS (W BROKEN)	REFLECT TY I THERMOPLAST PVMT MARKING 4" 100 MILS (W SOLID)	REFLECT TY I THERMOPLAST PVMT MARKING 8" 100 MILS (W SOLID)	REFLECT TY I THERMOPLAST PVMT MARKING 12" 100 MILS (W SOLID)	REFLECT TY I THERMOPLAST PVMT MARKING 24" 100 MILS (W SOLID)	REFLECT TY I THERMOPLAST PVMT MARKING 4" 100 MILS (Y SOLID)	REFLECT TY I THERMOPLAST PVMT MARKING 4" 100 MILS (W DASH)
		EA	EA	LF	LF	LF	LF	LF	LF	LF
SHEET 1 OF 5	BEGIN - 109+40		4	410	1026		139			
SHEET 2 OF 5	109+40 - 127+00	3	7	286	1274	184	89	23	2621	
SHEET 3 OF 5	127+00 - 144+60	4	5		3047	147		151	3247	
SHEET 4 OF 5	144+60 - 162+20	5	5	140	2659	736		40		
SHEET 5 OF 5	162+20 - END	19	3	720	545	2334	557	154		116
PROJECT TOTAL		**31**	**24**	**1556**	**8551**	**3401**	**785**	**368**	**5868**	**116**

SIGNING AND STRIPING QUANTITIES

BID ITEM		871S-D	871S-B	863S-5	863S-3	863S-2	863S-4	871S-A8DW	871S-D-S-W	TXDOT ITEM 658 6026	TXDOT ITEM 6120 6001
SHEET	STATION	REFLECT TY I THERMOPLAST PVMT MARKING 24" 100 MILS (W SYMBOLS)	REFLECT TY I THERMOPLAST PVMT MARKING 24" 100 MILS (W WORDS)	REFLECTORIZED PAVMENT MARKERS (TYII-C-R)	REFLECTORIZED PAVMENT MARKERS (TYII-A-A)	REFLECTORIZED PAVMENT MARKERS (TYI-C)	REFLECTORIZED PAVMENT MARKERS (TYII-B-B)	REFLECT TY I THERMOPLAST PVMT MARKING 8" 100 MILS (W DASH)	THERMOPLASTIC PAVEMENT MARKINGS, WHITE, YIELD SYMBOL (TYPE I)	INSTL DEL ASSM (D-SY)SZ (BRF)CTB	DEAD END ROADWAY BARRICADE
		EA	EA	EA	EA	EA	EA	LF	EA	EA	EA
SHEET 1 OF 5	BEGIN - 109+40			20			1				
SHEET 2 OF 5	109+40 - 127+00	4	2	14	39	9	1	75		6	
SHEET 3 OF 5	127+00 - 144+60	4	2		38	8		33		5	
SHEET 4 OF 5	144+60 - 162+20	3	5	6		38		91		7	
SHEET 5 OF 5	162+20 - END	15	11	37		82	1	286	20	6	20
PROJECT TOTAL		**26**	**20**	**77**	**77**	**137**	**3**	**485**	**20**	**24**	**20**

NUMBER	DATE	REVISION	APPROVED

STATE OF TEXAS
GREGORY C. CALKINS
111309
LICENSED
PROFESSIONAL ENGINEER
10/06/2016

CEDAR PARK

Binkley & Barfield, Inc
consulting engineers
Texas Registration Number F-257

ANDERSON MILL ROAD
GASPAR BEND TO WHITESTONE BLVD

QUANTITY SUMMARY

DESIGN BY: GCC
DRAWN BY: DSH
CHECKED BY: DRE
APPROVED BY: BDR
PROJECT NO: 156402
DATE: 10/6/2016

SCALE: NTS

SHEET:

PAGE: 17

10/6/2016
8:47:25 AM
...\CADD\SHEETS\GNSR1*AM*03.dgn

SUMMARY OF DRAINAGE ITEMS

DRN SHEET NO	LOCATION	111S-A EXCAVATION (CY)	120S-A CHANNEL EXCAVATION (CY)	132S-A EMBANKMENT (CY)	506S ROUND MH (4') (EA)	506S ROUND MH (5') (EA)	506S ROUND MH (6') (EA)	508S PROP CI (10') PRE-CAST TY I (EA)	508S-11 PROP GI (4'X2') (EA)	508S-9 4 SIDED AREA INLET (EA)	510-ASD-6 6 INCH PVC SCHEDULE 40 (LF)	605S SOIL RETENTION BLANKET (CLASS 1) (SY)	604S NATIVE SEEDING (SY)	609S-F VEGETATIVE WATERING (10 GAL/SY) (KGAL)	432 6001 RIPRAP (CONC) (4 IN) (CY)	459 6007 GABION MATTRESSES (GALV) (12 IN) (SY)	462 6001 CONC BOX CULV (3 FT X 2 FT) (LF)	464 6001 RC PIPE (CL III) (12 IN) (LF)	464 6003 RC PIPE (CL III) (18 IN) (LF)	464 6005 RC PIPE (CL III) (24 IN) (LF)	464 6007 RC PIPE (CL III) (30 IN) (LF)	464 6008 RC PIPE (CL III) (36 IN) (LF)
1	BEGIN - STA 105+00							1										110				
2	STA 105+00 - STA 109+50														2			864	12			
3	STA 109+50 - STA 114+00																		468			
4	STA 114+00 - STA 118+50																		621			
5	STA 118+50 - STA 123+00									1									248		266	
6	STA 123+00 - STA 127+50																		85		450	
7	STA 127+50 - STA 132+00																		137	38	450	
8	STA 132+00 - STA 136+50					1													95	245	190	
9	STA 136+50 - STA 141+00				1														355	85		
10	STA 141+00 - STA 145+50		110				1			1									8	102	132	168
11	STA 145+50 - STA 150+00					1		1		1									53	154	395	
12	STA 150+00 - STA 154+50				1			1		1									345	188		
13	STA 154+50 - STA 159+00							1							43				92			
14	STA 159+00 - STA 163+50				1			1	2						15				380	196		
15	STA 163+50 - STA 168+00		50		1		1		1										165	318		60
16	STA 168+00 - STA 172+50																		423			
17	STA 172+50 - STA 177+00				1					1								52	429	322		
18	STA 177+00 - END				1		2			1									67	42	104	
	CULVERT 02 LAYOUT														4		172					
	CULVERT 02 DITCH TO POND 01		3275									680	3090	30.9	23							
	POND 01 DETAIL			430							40				40	35						
	POND 02 DETAIL	815											790	7.9								
	PROJECT TOTALS	815	3435	430	6	2	4	5	3	6	40	680	3880	38.8	127	35	172	1026	3983	1690	1987	228

DRN SHEET NO	LOCATION	465 1001 TXDOT CI (10') PRE-CAST TY IIR (EA)	465 1002 TXDOT CI (15') PRE-CAST TY IIR (EA)	465 6007 JCTBOX (COMPL) (PJB) (3FTX5FT) (EA)	466 6195 WINGWALL (PW-2) (HW=6 FT) (EA)	466 6196 WINGWALL (PW-2) (HW=7 FT) (EA)	467 6356 SET (TY II) (18IN) (RCP) (3:1)C (EA)	467 6358 SET (TY II) (18IN) (RCP) (4:1)C (EA)	467 6388 SET (TY II) (24IN) (RCP) (3:1)C (EA)	467 6417 SET (TY II) (30 IN) (RCP) (3:1)C (EA)	467 6448 SET (TY II) (36 IN) (RCP) (3:1)C (EA)	467 6450 SET (TY II) (36 IN) (RCP) (4:1)C (EA)	591S-B-2-FC DRY ROCK RIPRAP (D50=12 IN) (CY)	WQ-01 CONTROL MANHOLE W/ PLUG VALVE (EA)	WQ-02 INTAKE RISER (EA)	WQ-03 VALVE (EA)	WQ-04 VALVE ACTUATOR (EA)	WQ-05 ELECTRICAL/ MECHANICAL/ OTHER MISC FOR BATCH DETENTION (LS)
1	BEGIN - STA 105+00																	
2	STA 105+00 - STA 109+50	2					1											
3	STA 109+50 - STA 114+00	2																
4	STA 114+00 - STA 118+50	3		2														
5	STA 118+50 - STA 123+00			2														
6	STA 123+00 - STA 127+50	2																
7	STA 127+50 - STA 132+00	3							2									
8	STA 132+00 - STA 136+50	2																
9	STA 136+50 - STA 141+00							1										
10	STA 141+00 - STA 145+50	1										1						
11	STA 145+50 - STA 150+00	1																
12	STA 150+00 - STA 154+50																	
13	STA 154+50 - STA 159+00																	
14	STA 159+00 - STA 163+50	2																
15	STA 163+50 - STA 168+00	2									1							
16	STA 168+00 - STA 172+50	4																
17	STA 172+50 - STA 177+00	2	2				1											
18	STA 177+00 - END									1								
	CULVERT 02 LAYOUT				1	1												
	CULVERT 02 DITCH TO POND 01												29					
	POND 01 LAYOUT													1	1	1	1	1
	POND 02 LAYOUT																	
	PROJECT TOTALS	26	2	4	1	1	2	1	2	1	1	1	29	1	1	1	1	1

NUMBER	DATE	REVISION	APPROVED

STATE OF TEXAS
RILEY W. SLADEK
108887
LICENSED
PROFESSIONAL ENGINEER
10/4/2016

LJA Engineering, Inc.
FRN - F-1386

Binkley & Barfield, Inc
consulting engineers
Texas Registration Number F-257

CEDAR PARK

ANDERSON MILL RD
SUMMARY OF DRAINAGE QUANTITIES

DESIGN BY: RS
DRAWN BY: CM
CHECKED BY: RS
APPROVED BY: DG
PROJECT NO:
DATE: 10/4/2016

SHEET: 1 OF 1
PAGE: 18

10/4/2016
3:10:19 PM
I:\1841\1402\CADD\SHEETS\NORTH\02-General\NAMR*QTY*01.dgn

WATER LINE QUANTITIES

BID ITEM		504S-1RM	510-AR10	510-AW2	510-AW8	510-AWW6				511S-A-8GV	511S-A-10GV	511S-A8	511S-A10	511S-E	TXDOT ITEM 5034-6001				402S-AW
SHEET	STATION	REPOSTITIONING & ADJUSTING WATER METERS	10" PVC WITH RESTRAINED JOINTS	2" SERVICE LINE	8" PVC	6" DUCTILE IRON	CONNECT TO EXISTING 10" PIPE *	10"X8"X8" CROSS *	CUT IN 10"X6" SWIVEL TEE *	VALVES 8" PVC	VALVES 10" PVC	ADJUST VALVES 8" PVC	ADJUST VALVES 10" PVC	REMOVE & RELOCATE EXISTING AIR RELEASE VALVE	RELOCATE & RECONNECT EXISTING FIRE HYDRANT	LANDSCAPE IRRIGATION SYSTEM	REMOVE EXISTING SERVICE LINE *	REMOVE EXISTING 10" WATER LINE *	CONTROLLED LOW STRENGTH MATERIAL (ABAND. EXIST. 10" WATER LINE)
		EA	LF	LF	LF	LF	EA	EA	EA	EA	EA	EA	EA	EA	EA	LS	LF	LF	CY
SHEET 1 OF 9	BEGIN - 109+40					22			1				1		1				
SHEET 2 OF 9	109+40 - 118+20	1	375	146			2					1	1	1			32		8
SHEET 3 OF 9	118+20 - 127+00		857	75		11	1						1		1				17
SHEET 4 OF 9	127+00 - 135+80		17				1												1
SHEET 5 OF 9	135+80 - 144+60		65															25	
SHEET 6 OF 9	144+60 - 153+40		65		101			1		2	2							25	
SHEET 7 OF 9	153+40 - 162+20		195	6										1				75	
SHEET 8 OF 9	162+20 - 171+00		260		193			2		4	4							100	
SHEET 9 OF 9	171+00 - END		255		110	21		1		2	2		1		1			50	
PROJECT TOTAL		1	2,089	227	404	54	4	4		8	8	1	4	2	3	1	32	275	26

* FOR CONCTRACTORS INFORMATION ONLY - SUBSIDIARY TO ITEM 510 - PIPE

WASTE WATER QUANTITIES

BID ITEM		506S-CNWW4	506S-M	510AR-8	510-AWW12.1	510-HR	
SHEET	STATION	CONNECT TO EXISTING MANHOLE	MANHOLE 4' DIA	8" PVC	12" SDR 26	CEMENT STABILIZED ENCASEMENT	8" PLUG *
		EA	EA	LF	LF	LF	EA
SHEET 1 OF 4	BEGIN - 153+40		1	6	434	22	1
SHEET 2 OF 4	153+40 - 162+20		4	119	880	44	3
SHEET 3 OF 4	162+20 - 171+00		4	194	880	44	4
SHEET 4 OF 4	171+00 - END	1	1	125	686	66	3
PROJECT TOTAL		1	10	444	2,880	176	11

* FOR CONCTRACTORS INFORMATION ONLY - SUBSIDIARY TO ITEM 510 - PIPE

EROSION CONTROL QUANTITIES

BID ITEM		605S-A	609S-A	609S-C	609S-F	610S-A	628S-C	628S-D	639S	641S	642S
SHEET	STATION	SOIL RETENTION BLANKET CL 1 TY C	4" TOPSOIL AND SEEDBED PREPARATION	NATIVE SEEDING	VEGETATIVE WATERING (10 GAL/SY)	PROTECTIVE FENCING TYPE A CHAIN LINK FENCE	FILTER CURB INLET PROTECTION (NEW INLET)	FILTER CURB INLET PROTECTION (EXIST INLET)	ROCK BERM	STABILIZED CONSTRUCTION ENTRANCE *	SILT FENCE FOR EROSION CONTROL
		SY	SY	SY	Kgal	LF	EA	EA	LF	EA	LF
PROJECT										2	
SHEET 1 OF 5	BEGIN - 109+40		1,524	1,524	15		5	2			1,470
SHEET 2 OF 5	109+40 - 127+00	149	6,239	6,239	62	880	12		48		2,950
SHEET 3 OF 5	127+00 - 144+60		13,007	13,007	130		10		16		1,846
SHEET 4 OF 5	144+60 - 162+20	874	14,725	14,725	147		9		16		3,492
SHEET 5 OF 5	162+20 - END		5,349	5,349	53		14		32		3,053
PROJECT TOTAL		**1,023**	**40,844**	**40,844**	**408**	**880**	**50**	**2**	**112**	**2**	**12,811**

*CONTRACTOR TO LOCATE CONSTRUCTION ENTRANCES IN THE FIELD

NUMBER	DATE	REVISION	APPROVED

STATE OF TEXAS
GREGORY C. CALKINS
111309
LICENSED
PROFESSIONAL ENGINEER
10/06/2016

CEDAR PARK

Binkley & Barfield, Inc
consulting engineers
Texas Registration Number F-257

ANDERSON MILL ROAD
GASPAR BEND TO WHITESTONE BLVD

QUANTITY SUMMARY

DESIGN BY: GCC
DRAWN BY: DSH
CHECKED BY: DRE
APPROVED BY: BDR
PROJECT NO: 156402
DATE: 10/6/2016

SCALE: NTS

SHEET:

PAGE: 19

10/6/2016
8:47:26 AM
...\CADD\SHEETS\GNSR1*AM*04.dgn

ESTIMATED QUANTITIES

ITEM	CODE	DESCRIPTION	UNIT	QUANTITY
0416	6030	+DRILL SHAFT (TRF SIG POLE) (24 IN)	LF	18
0416	6032	DRILL SHAFT (TRF SIG POLE) (36 IN)	LF	28
0416	6034	DRILL SHAFT (TRF SIG POLE) (48 IN)	LF	44
0618	6023	CONDT (PVC) (SCH 40) (2")	LF	470
0618	6024	CONDT (PVC) (SCH 40) (2") (BORE)	LF	600
0618	6029	CONDT (PVC) (SCH 40) (3")	LF	120
0618	6030	CONDT (PVC) (SCH 40) (3") (BORE)	LF	990
0620	6007	ELEC CONDR (NO.8) BARE	LF	2,105
0620	6008	ELEC CONDR (NO.8) INSULATED	LF	2,840
0620	6009	ELEC CONDR (NO.6) BARE	LF	75
0620	6010	ELEC CONDR (NO.6) INSULATED	LF	150
0624	6010	GROUND BOX TY D (162922)W/APRON	EA	5
0636	6003	*ALUMINUM SIGNS (TY O)	SF	21
0680	6003	INSTALL HWY TRF SIG (SYSTEM)	EA	1
0680	6004	REMOVING TRAFFIC SIGNALS	EA	1
0682	6001	VEH SIG SEC (12")LED(GRN)	EA	8
0682	6002	VEH SIG SEC (12")LED(GRN ARW)	EA	6
0682	6003	VEH SIG SEC (12")LED(YEL)	EA	8
0682	6004	VEH SIG SEC (12")LED(YEL ARW)	EA	6
0682	6005	VEH SIG SEC (12")LED(RED)	EA	8
0682	6006	VEH SIG SEC (12")LED(RED ARW)	EA	4
0682	6018	PED SIG SEC (LED)(COUNTDOWN)	EA	4
0682	6023	BACK PLATE (12")(3 SEC)	EA	8
0682	6024	BACK PLATE (12")(4 SEC)	EA	4
0684	6008	TRF SIG CBL (TY A)(12 AWG)(3 CONDR)	LF	1,420
0684	6028	TRF SIG CBL (TY A)(14 AWG)(2 CONDR)	LF	1,480
0684	6031	TRF SIG CBL (TY A)(14 AWG)(5 CONDR)	LF	3,030
0684	6033	TRF SIG CBL (TY A)(14 AWG)(7 CONDR)	LF	1,395
0686	6044	INS TRF SIG PL AM(S)1 ARM(40')LUM&ILSN	EA	1
0686	6048	INS TRF SIG PL AM(S)1 ARM(44')LUM&ILSN	EA	1
0686	6068	INS TRF SIG PL AM(S)1 ARM(65')LUM&ILSN	EA	2
0687	6001	PED POLE ASSEMBLY	EA	3
0688	6001	PED DETECT PUSH BUTTON (APS)	EA	4
0688	6003	PED DETECTOR CONTROLLER UNIT	EA	1
0690	6038	**REMOVAL OF CONTROL CABINET(GRND MNT)	EA	1
0690	6040	*INSTALL OF CONTROL CABINET(GRND MNT)	EA	1
6002	6010	*+VIVDS CAMERA ASSEMBLY	EA	4
6002	6005	VIVDS COMMUNICATION CABLE (COAXIAL)	LF	1,350
6062	6019	ITS RADIO (SNGL) (5 GHZ)-I-S	EA	1
0633	0001	BATTERY BACKUP SYSTEM FOR TRAFFIC SIGNAL	EA	1
6089	6002	CAT 5 ETHERNET CABLE	LF	1,500
6090	6001	++ILSN (LED) (8 S)	EA	4

*SUBSIDIARY TO ITEM 680. CONTROLLER AND CABINET TO BE PROVIDED BY CITY.
+SUBSIDIARY TO ITEM 0687.
**SUBSIDIARY TO 680-6004
++RELOCATE ONLY
*+CITY TO PROVIDE, CALIBRATE AND PROGRAM. CONTRACTOR TO INSTALL ONLY.

ITEMS TO BE PROVIDED BY CITY:
SIGNAL CONTROLLER AND CABINET
VIVDS CAMERAS
VIVDS PROCESSORS
BATTERY BACKUP SYSTEM FOR TRAFFIC SIGNAL

10/3/2016

Kimley»Horn

F-928

© 2016 CITY OF CEDAR PARK

ANDERSON MILL AND RM 1431
TRAFFIC SIGNAL

SIGNAL QUANTITIES

DES: RPO
CK: BDV

CEDAR PARK
JOB NO. 067783504

SHEET NO.
20

U:\156402 Anderson Mill Rd Illumination\CADD\T-Y1_AM_06-181.dgn 10/5/2016 4:18:23 PM F-8

Half_PDF_Lighter.plt

Electric_pen.tbl

THIS SHEET INTENTIONALLY LEFT BLANK

NUMBER	DATE	REVISION	APPROVED

CEDAR PARK

Binkley &Barfield, Inc.
consulting engineers
Texas Registration Number F-257
1710 Seawolf Drive
Houston, Texas 77008-3189
(713) 869-3433 (713) 869-8702 FAX

ANDERSON MILL ROAD
GASPAR BEND TO WHITESTONE BLVD

DESIGN BY:	KWR	SCALE:	1"=80'
DRAWN BY:	FJR		
CHECKED BY:	DRE	SHEET:	
APPROVED BY:	BDR		
PROJECT NO:	156402	PAGE:	21
DATE:	10/5/2016		

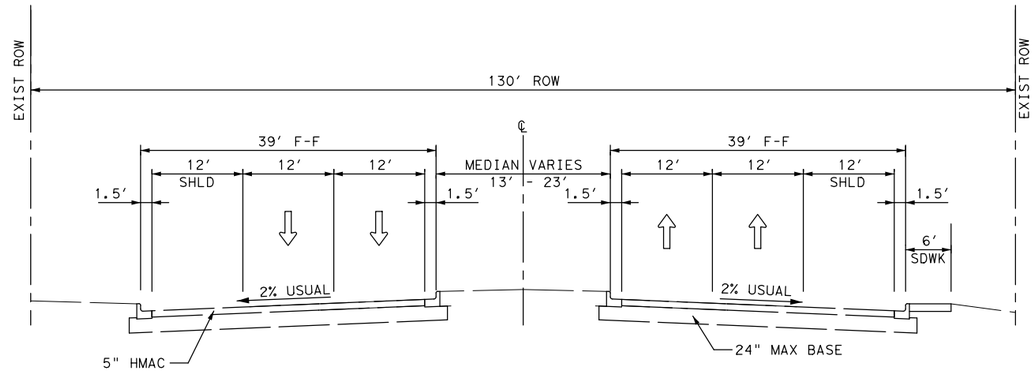

EXISTING ANDERSON MILL TYPICAL SECTION

BEGIN PROJECT TO STA 105+20.48

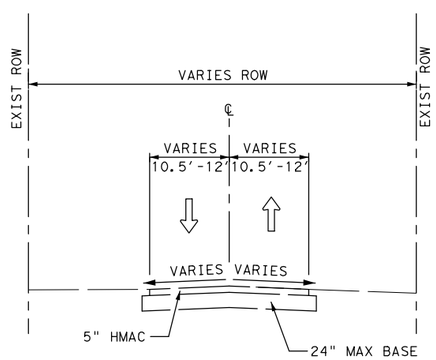

EXISTING ANDERSON MILL TYPICAL SECTION

STA 105+20.48 TO STA 177+76.09

NUMBER	DATE	REVISION	APPROVED

STATE OF TEXAS
GREGORY C. CALKINS
111309
LICENSED
PROFESSIONAL ENGINEER

10/06/2016

CEDAR PARK

Binkley & Barfield, Inc
consulting engineers
Texas Registration Number F-257

ANDERSON MILL ROAD
GASPAR BEND TO WHITESTONE BLVD
EXISTING TYPICAL SECTIONS

DESIGN BY:	GCC	SCALE: NTS
DRAWN BY:	DSH	
CHECKED BY:	DRE	SHEET: 1 OF 1
APPROVED BY:	BDR	
PROJECT NO:	156402	PAGE: 22
DATE:	10/6/2016	

10/6/2016
8:47:26 AM
...\CADD\SHEETS\GNET1*AM*01.dgn

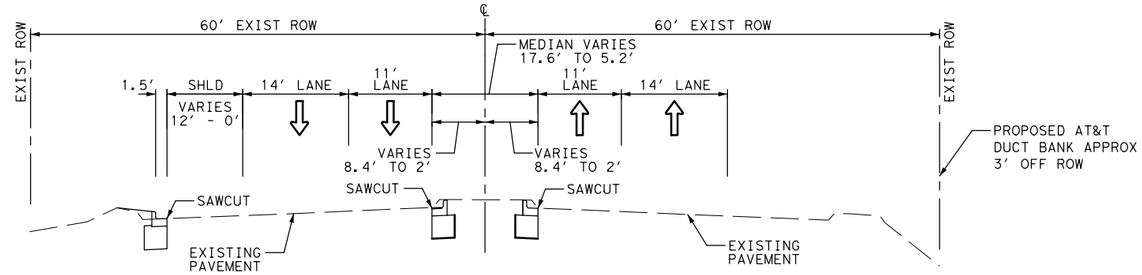

PROPOSED ANDERSON MILL TYPICAL SECTION

STA 102+32.56 TO STA 104+52.86

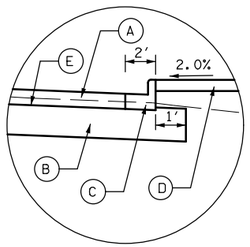

(A) 6" TYPE D ASPHALT

(B) 15" FLEXIBLE BASE - 3 LIFTS

(C) CURB & GUTTER

(D) 4" SIDEWALK

(E) PRIME COAT

DETAIL A

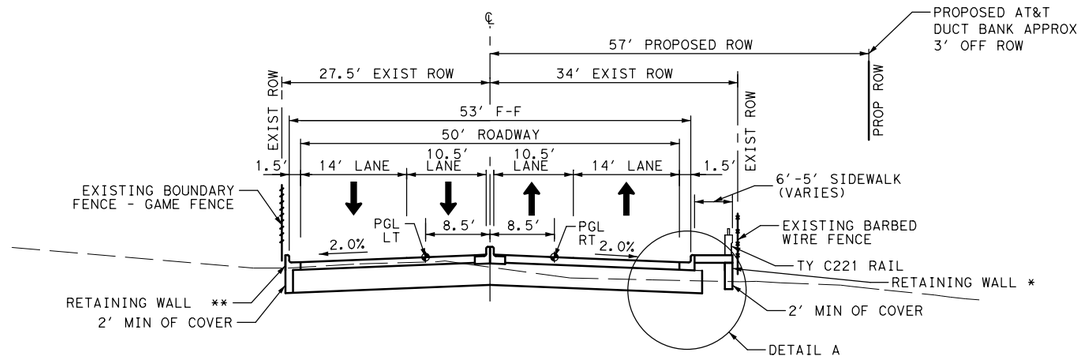

PROPOSED ANDERSON MILL TYPICAL SECTION

STA 104+52.86 TO STA 111+20.03

* FROM STA 105+20.00 TO STA 110+00.00

** FROM STATION 106+00.00 TO STA 111+20.03

SEE RETAINING WALL DETAIL SHEET

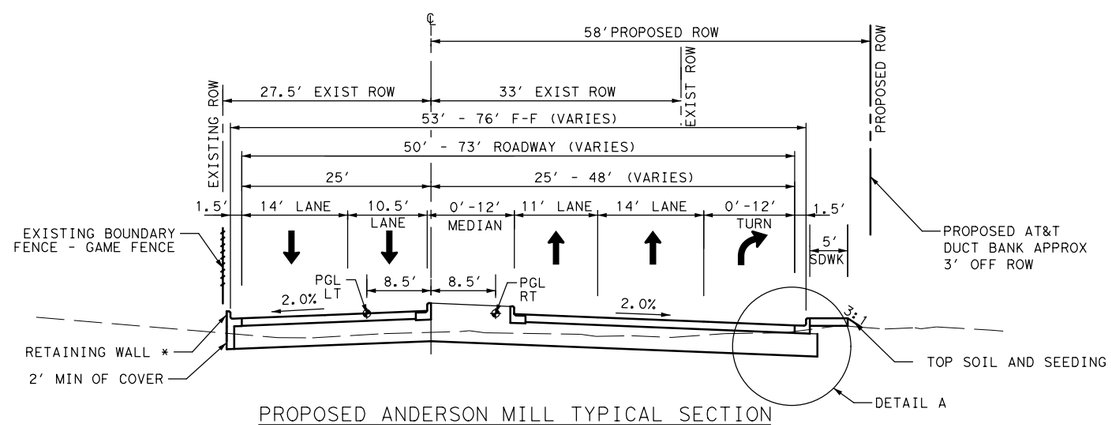

PROPOSED ANDERSON MILL TYPICAL SECTION

STA 111+20.03 TO STA 113+55.57

* FROM STA 111+20.03 TO STA 112+00.00

SEE RETAINING WALL DETAIL SHEET

NOTES:

1. REFER TO HORIZONTAL ALIGNMENT DATA SHEET FOR PAVEMENT CROSS SLOPE INFORMATION.
2. STATION LIMITS SHOWN ARE APPROXIMATE. SEE APPLICABLE PLAN AND PROFILE SHEETS FOR TRANSITIONS.
3. SEE PLAN AND PROFILE PLANS FOR LIMITS OF MEDIAN PAVERS, RIPRAP, AND TOPSOIL AND SEEDING.

NUMBER	DATE	REVISION	APPROVED

STATE OF TEXAS
GREGORY C. CALKINS
111309
LICENSED
PROFESSIONAL ENGINEER

10/06/2016

CEDAR PARK

Binkley & Barfield, Inc
consulting engineers
Texas Registration Number F-257

ANDERSON MILL ROAD
GASPAR BEND TO WHITESTONE BLVD
PROPOSED TYPICAL SECTIONS

DESIGN BY:	GCC	SCALE: NTS	
DRAWN BY:	DSH		
CHECKED BY:	DRE		
APPROVED BY:	BDR	SHEET: 1 OF 5	
PROJECT NO:	156402		
DATE:	10/6/2016	PAGE: 23	

10/6/2016
8:47:27 AM
...\CADD\SHEETS\GNPT1*AM*01.dgn

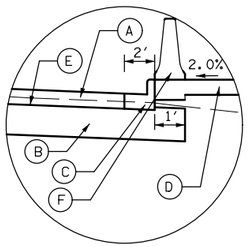

DETAIL A

(A) 6" TYPE D ASPHALT
(B) 15" FLEXIBLE BASE - 3 LIFTS
(C) CURB & GUTTER
(D) 4" SIDEWALK
(E) PRIME COAT
(F) CONCRETE TRAFFIC BARRIER WITH FOUNDATION

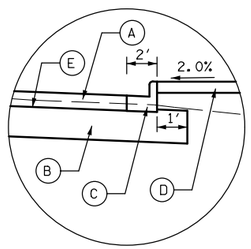

DETAIL B

(A) 6" TYPE D ASPHALT
(B) 15" FLEXIBLE BASE - 3 LIFTS
(C) CURB & GUTTER
(D) 4" SIDEWALK
(E) PRIME COAT

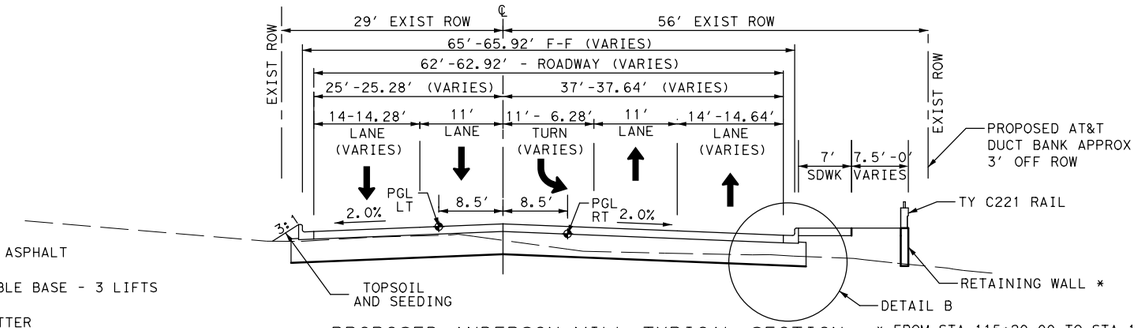

PROPOSED ANDERSON MILL TYPICAL SECTION

STA 113+55.57 TO STA 117+70.14

* FROM STA 115+20.00 TO STA 117+70.14
SEE RETAINING WALL DETAIL SHEET

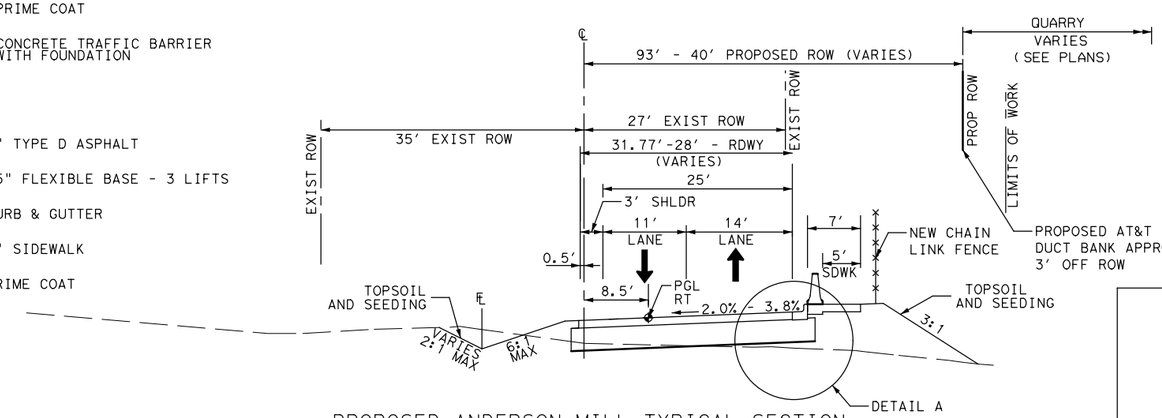

PROPOSED ANDERSON MILL TYPICAL SECTION

STA 117+70.14 TO STA 125+11.00 = 3.8% TO -2.0%
STA 125+11.00 TO STA 129+00.38 = -2.0%

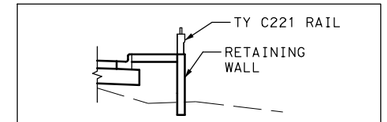

RETAINING WALL

FROM STA 117+70.14 TO STA 119+40.00
SEE RETAINING WALL DETAIL SHEET

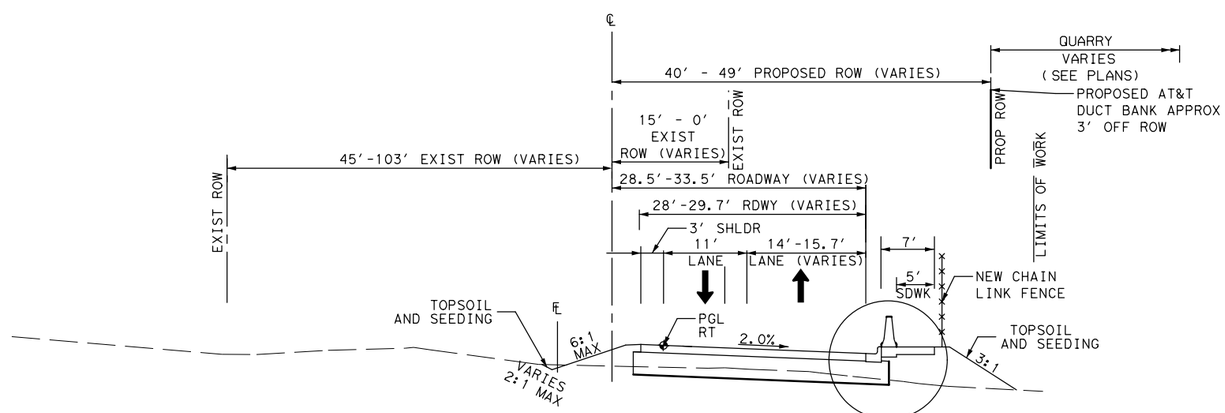

PROPOSED ANDERSON MILL TYPICAL SECTION

STA 129+00.38 STA 136+13.79

NOTES:

1. REFER TO HORIZONTAL ALIGNMENT DATA SHEET FOR PAVEMENT CROSS SLOPE INFORMATION.
2. STATION LIMITS SHOWN ARE APPROXIMATE. SEE APPLICABLE PLAN AND PROFILE SHEETS FOR TRANSITIONS.
3. SEE PLAN AND PROFILE PLANS FOR LIMITS OF MEDIAN PAVERS, RIPRAP, AND TOPSOIL AND SEEDING.

NUMBER	DATE	REVISION	APPROVED

STATE OF TEXAS
GREGORY C. CALKINS
111309
LICENSED
PROFESSIONAL ENGINEER
10/06/2016

CEDAR PARK

Binkley & Barfield, Inc
consulting engineers
Texas Registration Number F-257

ANDERSON MILL ROAD
GASPAR BEND TO WHITESTONE BLVD
PROPOSED TYPICAL SECTIONS

DESIGN BY:	GCC	SCALE: NTS	
DRAWN BY:	DSH		
CHECKED BY:	DRE		
APPROVED BY:	BDR	SHEET: 2 OF 5	
PROJECT NO:	156402		
DATE:	10/6/2016	PAGE: 24	

10/6/2016
8:47:28 AM
...\CADD\SHEETS\GNPT1*AM*02.dgn

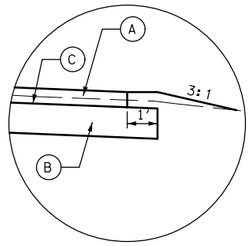

(A) 6" TYPE D ASPHALT
(B) 15" FLEXIBLE BASE - 3 LIFTS
(C) PRIME COAT

DETAIL A

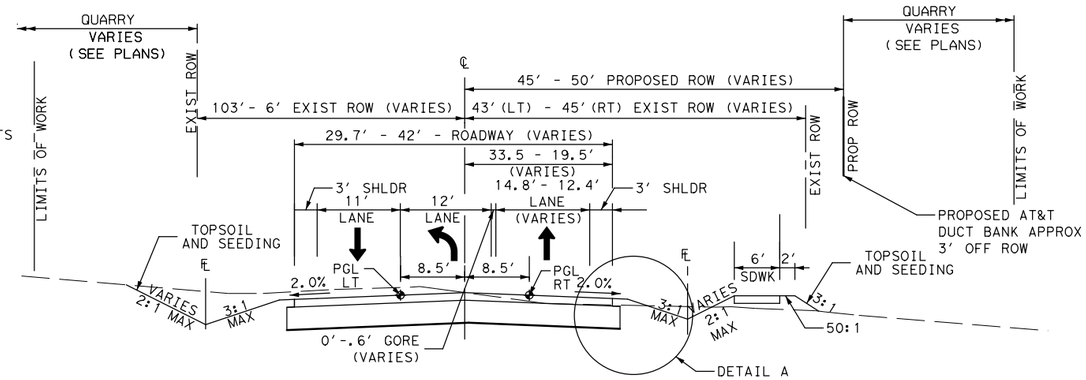

PROPOSED ANDERSON MILL TYPICAL SECTION

STA 136+13.79 TO STA 141+38.60

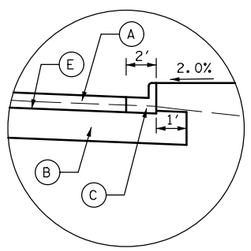

(A) 6" TYPE D ASPHALT
(B) 15" FLEXIBLE BASE - 3 LIFTS
(C) CURB & GUTTER
(E) PRIME COAT

DETAIL B

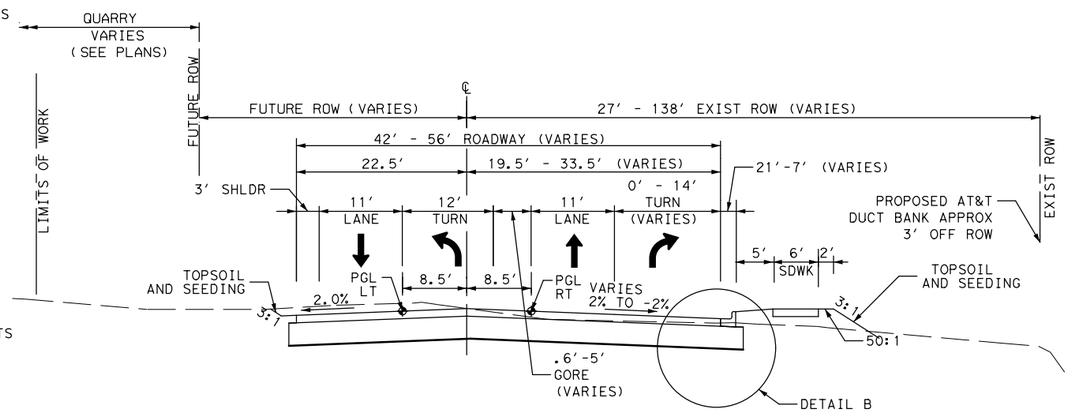

PROPOSED ANDERSON MILL TYPICAL SECTION

STA 141+38.60 TO STA 144+42.22

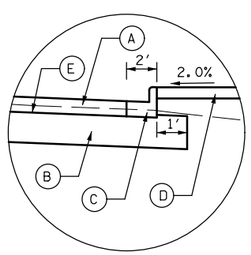

(A) 6" TYPE D ASPHALT
(B) 15" FLEXIBLE BASE - 3 LIFTS
(C) CURB & GUTTER
(D) 4" SIDEWALK
(E) PRIME COAT

DETAIL C

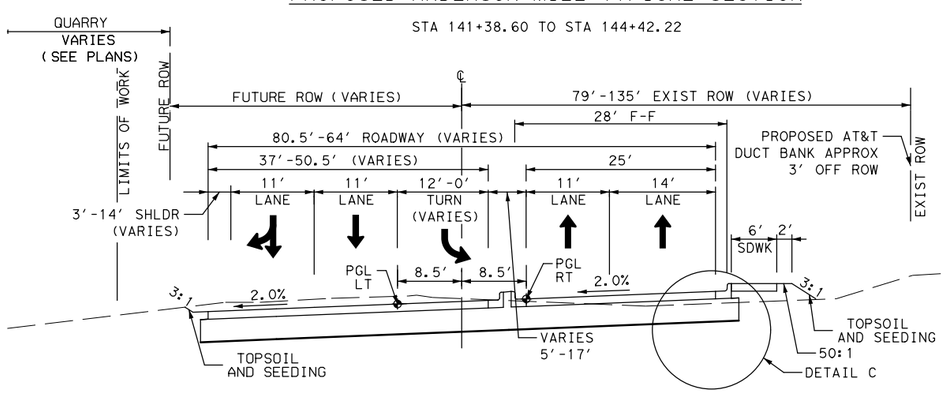

PROPOSED ANDERSON MILL TYPICAL SECTION

STA 144+42.22 TO STA 147+77.65

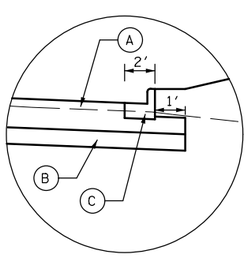

(A) 11" CONCRETE PAVEMENT
(B) 6" FLEXIBLE BASE
(C) CURB & GUTTER

DETAIL D
(NOT SHOWN)

STA 143+19.49 TO STA 144+57.22

NOTES:

1. REFER TO HORIZONTAL ALIGNMENT DATA SHEET FOR PAVEMENT CROSS SLOPE INFORMATION.
2. STATION LIMITS SHOWN ARE APPROXIMATE. SEE APPLICABLE PLAN AND PROFILE SHEETS FOR TRANSITIONS.
3. SEE PLAN AND PROFILE PLANS FOR LIMITS OF MEDIAN PAVERS, RIPRAP, AND TOPSOIL AND SEEDING.

NUMBER	DATE	REVISION	APPROVED

STATE OF TEXAS
GREGORY C. CALKINS
111309
LICENSED
PROFESSIONAL ENGINEER
10/06/2016

CEDAR PARK

Binkley & Barfield, Inc
consulting engineers
Texas Registration Number F-257

ANDERSON MILL ROAD
GASPAR BEND TO WHITESTONE BLVD
PROPOSED TYPICAL SECTIONS

DESIGN BY:	GCC	SCALE: NTS	
DRAWN BY:	DSH		
CHECKED BY:	DRE	SHEET: 3 OF 5	
APPROVED BY:	BDR		
PROJECT NO:	156402	PAGE: 25	
DATE:	10/6/2016		

10/6/2016
8:47:29 AM
...\CADD\SHEETS\GNPT1*AM*03.dgn

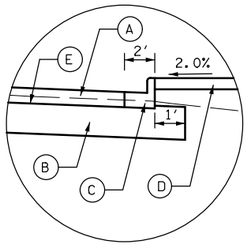

DETAIL A

(A) 6" TYPE D ASPHALT
(B) 15" FLEXIBLE BASE - 3 LIFTS
(C) CURB & GUTTER
(D) 4" SIDEWALK
(E) PRIME COAT

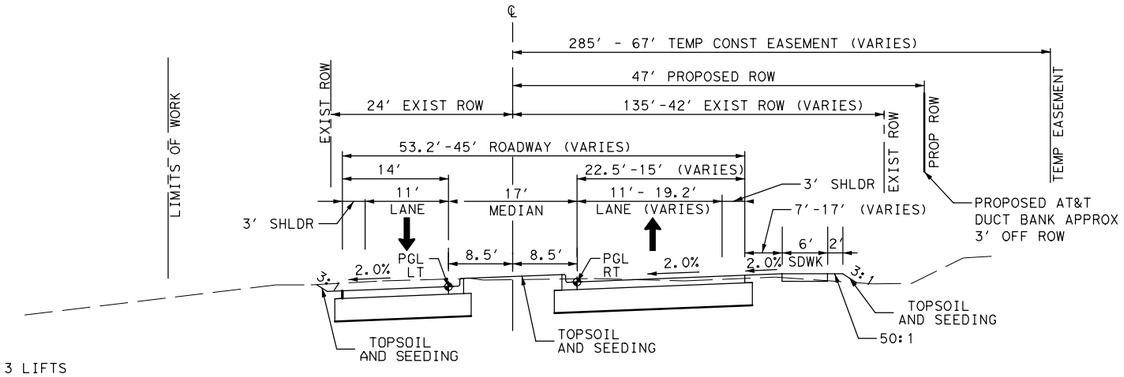

PROPOSED ANDERSON MILL TYPICAL SECTION

STA 147+77.65 TO STA 155+00.45

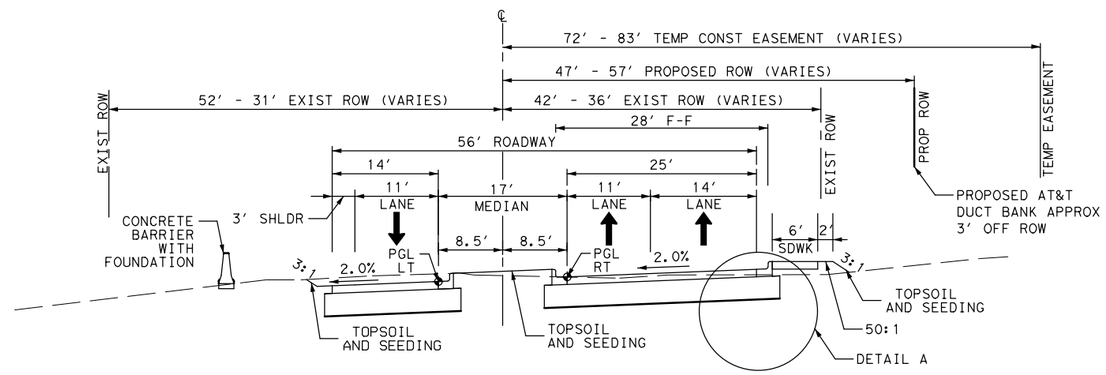

PROPOSED ANDERSON MILL TYPICAL SECTION

STA 155+00.45 TO STA 160+80.27

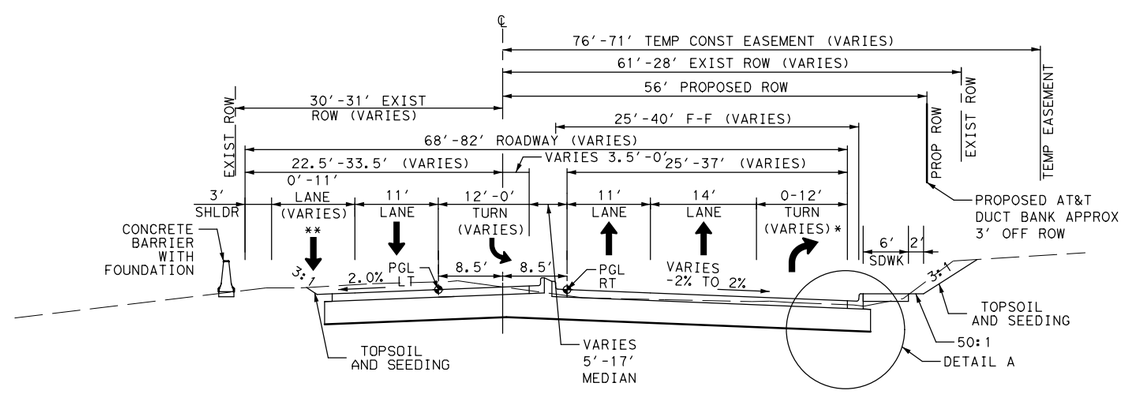

PROPOSED ANDERSON MILL TYPICAL SECTION

STA 160+80.27 TO STA 168+65.86

* FROM 164+08.83 TO STA 168+65.86
** FROM STA 165+97.96 TO 168+65.86

NOTES:

1. REFER TO HORIZONTAL ALIGNMENT DATA SHEET FOR PAVEMENT CROSS SLOPE INFORMATION.
2. STATION LIMITS SHOWN ARE APPROXIMATE. SEE APPLICABLE PLAN AND PROFILE SHEETS FOR TRANSITIONS.
3. SEE PLAN AND PROFILE PLANS FOR LIMITS OF MEDIAN PAVERS, RIPRAP, AND TOPSOIL AND SEEDING.

NUMBER	DATE	REVISION	APPROVED

STATE OF TEXAS
GREGORY C. CALKINS
111309
LICENSED
PROFESSIONAL ENGINEER
10/06/2016

CEDAR PARK

Binkley & Barfield, Inc
consulting engineers
Texas Registration Number F-257

ANDERSON MILL ROAD
GASPAR BEND TO WHITESTONE BLVD
PROPOSED TYPICAL SECTIONS

DESIGN BY:	GCC	SCALE: NTS	
DRAWN BY:	DSH		
CHECKED BY:	DRE		
APPROVED BY:	BDR	SHEET: 4 OF 5	
PROJECT NO:	156402		
DATE:	10/6/2016	PAGE: 26	

10/6/2016
8:47:30 AM
...\CADD\SHEETS\GNPT1*AM*04.dgn

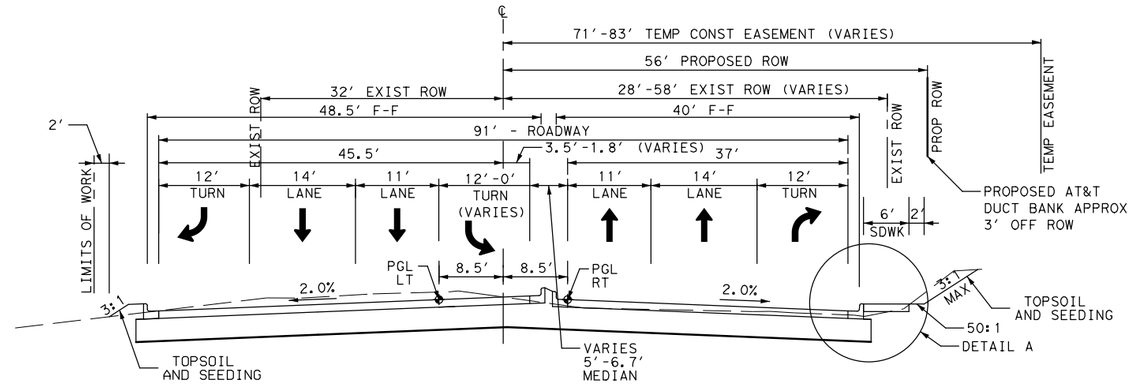

PROPOSED ANDERSON MILL TYPICAL SECTION

STA 168+65.86 TO STA 173+93.47

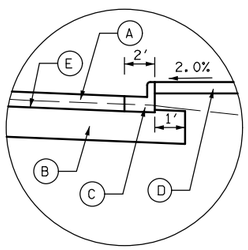

(A) 6" TYPE D ASPHALT

(B) 15" FLEXIBLE BASE - 3 LIFTS

(C) CURB & GUTTER

(D) 4" SIDEWALK

(E) PRIME COAT

DETAIL A

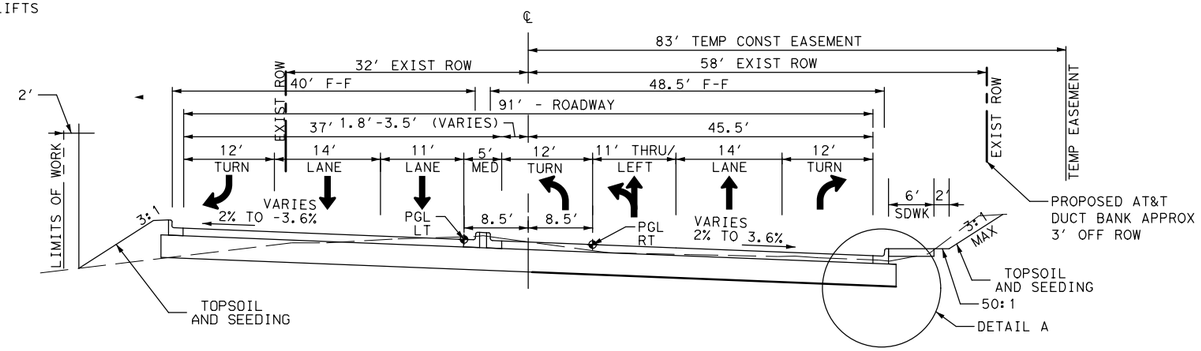

PROPOSED ANDERSON MILL TYPICAL SECTION

STA 173+93.47 TO STA 177+60.50

NOTES:

1. REFER TO HORIZONTAL ALIGNMENT DATA SHEET FOR PAVEMENT CROSS SLOPE INFORMATION.
2. STATION LIMITS SHOWN ARE APPROXIMATE. SEE APPLICABLE PLAN AND PROFILE SHEETS FOR TRANSITIONS.
3. SEE PLAN AND PROFILE PLANS FOR LIMITS OF MEDIAN PAVERS, RIPRAP, AND TOPSOIL AND SEEDING.

NUMBER	DATE	REVISION	APPROVED

STATE OF TEXAS
GREGORY C. CALKINS
111309
LICENSED
PROFESSIONAL ENGINEER

10/06/2016

CEDAR PARK

Binkley & Barfield, Inc
consulting engineers
Texas Registration Number F-257

ANDERSON MILL ROAD
GASPAR BEND TO WHITESTONE BLVD
PROPOSED TYPICAL SECTIONS

DESIGN BY:	GCC	SCALE: NTS	
DRAWN BY:	DSH		
CHECKED BY:	DRE		
APPROVED BY:	BDR	SHEET: 5 OF 5	
PROJECT NO:	156402		
DATE:	10/6/2016	PAGE: 27	

10/6/2016
8:47:30 AM
...\CADD\SHEETS\GNPT1*AM*05.dgn

PHASE 1

1. On Anderson Mill Road, beginning at STA 102+78, remove existing raised median and place temporary pavement using Standard 804S-1 “Typical Traffic Control Plan for Shifting Traffic”.
2. Construction temporary pavement on the east side of the existing asphalt pavement from STA 114+26 to STA 118+83 as shown on the traffic control plans using Standard 804S-1 “Typical Traffic Control Plan for Shifting Traffic”.
3. Place signing, channeling devices, and work zone pavement markings to shift lanes to the east onto existing and temporary pavement from STA 114+26 to STA 119+20 as shown on the traffic control plans.
4. Place signing, channeling devices, and work zone pavement markings to shift the northbound and southbound lanes to the east using the existing pavement and the newly constructed temporary pavement between STA 101+10 and STA 107+03 as shown on the traffic control plans.
5. In Phase 1 traffic will continue to use the existing Anderson Mill Rd. pavement to maintain one lane of traffic in the northbound and one lane in the southbound direction.
6. Remove existing pavement and construct proposed improvements along Anderson Mill Rd. as shown on the plans.

Keep existing right turn lanes open at FM 1431 until new returns are constructed. Construct that portion of the west island with the new pavement and install the new traffic signal poles as shown on the Signal Plans. The existing traffic signal is to remain operational at this time.

PHASE 1A

1. Construct temporary asphalt pavement at the following locations as shown in the traffic control plans using standard 804S-1 “Typical Traffic Control Plan for Shifting Traffic”.
   a. The west side of existing Anderson Mill Rd.from STA 117+70 to STA 123+15 to connect new pavement constructed in Phase 1 to the existing pavement.
   b. The east side of existing Anderson Mill Rd. from STA 131+13.11 to STA 136+12.57 to connect existing pavement to the new pavement constructed in Phase 1.
   c. The east side of existing Anderson Mill Rd. from STA 136+55.65 to STA 141+30.80 to connect the new pavement constructed in Phase 1 to the existing pavement.
   d. The east side of existing Anderson Mill Rd. from STA 150+78 to STA 157+00 to connect existing pavement to the new pavement constructed in Phase 1.
   e. The inside of the east side northbound lanes of Anderson Mill Rd. from STA 161+54 to STA 163+59 to widen the pavement for shifting southbound traffic, and
2. Southbound
   a. Place signing, channeling devices, and work zone pavement markings to route southbound traffic onto the new southbound lane from the beginning of the project to STA 117+70 then on temporary pavement, transitioning to the existing Anderson Mill Rd. pavement at STA 123+15 as shown on the traffic control plans.
   b. Traffic then continues on existing Anderson Mill Rd. pavement to STA 134+15 where it will be routed on temporary pavement to cross the new pavement (STA 135+45 to STA 137+11) to the temporary pavement connection from STA 137+66 to STA 139+72 and existing Anderson Mill Rd. pavement. Southbound traffic will continue on existing Anderson Mill Rd. pavement to temporary pavement from STA 150+78 to STA 155+55 then continuing on new pavement constructed in Phase 1 to STA 161+54 where southbound traffic will be on existing and temporary pavement until STA 163+59 where southbound traffic will continue on new pavement to the end of the project at the FM 1431 intersection, as shown on the traffic control plans.
3. Northbound
   a. Place signing, channeling devices, and work zone pavement markings to route maintain northbound traffic on existing Anderson Mill Rd. Traffic will continue north on existing and temporary pavement sections to STA 131+13 where it will be routed on temporary pavement to cross the new pavement (STA 134+15 to STA 136+54) and then to the temporary pavement connection from STA 136+54 to STA 141+34 and existing Anderson Mill Rd. pavement.
   b. At STA 150+78 northbound traffic will be routed to STA 157+00 where temporary pavement connects to new pavement constructed in Phase 1.Northbound traffic will continue on new pavement to the end of the project at the FM 1431 intersection as shown on the traffic control plans.
4. Remove existing pavement and construct proposed improvements along Anderson Mill Road as shown on the plans.

PHASE 2

1. Place signing, channeling devices, and work zone pavement markings to complete construction of Anderson Mill Rd. from approx. 1,200-ft south of Gaspar Bend to the FM 1431 intersection.
2. Southbound
   a. Maintain southbound traffic on the new pavement on the west side (outside lane of Anderson Mill Rd. as shown on the traffic control plans.
   b. Southbound traffic will then proceed from the beginning of the project to STA 117+70, where the southbound lane will be routed on temporary pavement to the east side (inside lane) of new pavement constructed in Phase 1 and Phase 1A as shown on the traffic control plans.
   c. Southbound traffic will then proceed to the end of project at the FM 1431 intersection.
   d. Southbound traffic will proceed from eastbound FM 1431 on the new dedicated “free” right turn as shown on the Phase 2 Traffic Control Plans.
1. Northbound.
   a. Shift northbound traffic to the new pavement on the east side (outside lane) of Anderson Mill Rd. and Northbound traffic will proceed from the beginning of the project to STA 139+50 where it will be routed to the remaining existing Anderson Mill Rd. pavement.
   b. Northbound traffic will proceed on existing Anderson Mill Rd. to temporary pavement from STA 150+78 to STA 157+00 and new pavement constructed in Phase 1A to the end of the project at the FM 1431 intersection as shown on the traffic control plans.
2. Complete removal of existing pavement and construction of all proposed improvements along Anderson Mill Rd. as shown on the plans.
3. Northbound traffic will proceed to eastbound FM 1431 on the new dedicated “free” right turn as shown on the Phase 2 Traffic Control Plans.
4. The west island construction will be completed and the east island constructed in Phase 2, As well as the inside northbound and southbound lanes of Anderson Mill Rd. and the raised Median. The Contractor will provide staged construction of the remaining improvements, Including the final signal improvements necessary to complete the work.
5. The new traffic signal system, when tested and approved by the City and TxDOT personnel, will be operating when the existing traffic signals are removed from service.
6. Construct final pavement markings along Anderson Mill Rd. as shown on the pavement marking plans.
7. After acceptance from the engineer, remove any remaining signing, channelizing devices, and work zone pavement markings and re-open to traffic.

TRAFFIC CONTROL GENERAL NOTES:

1. The construction traffic control signs, devices, and barricades on these drawings constitute minimum requirements and are not intended to cover special circumstances or other conditions that may arise due to unforeseen field conditions.

2. The contractor shall place and maintain sufficient additional signs, barricades, and warning devices to warn the public and provide for safe movement of traffic through the construction zone safely. Where special circumstances or other unforeseen conditions that are not fully addressed by either the plans or standards provided, "The Texas Manual on Uniform Traffic Control Devices" (TXMUTCD) shall govern.

3. Contractor shall provide and install all traffic control devices in conformance with the most recent edition and/or revision of Part VI of the TXMUTCD, during construction.

4. All signs and markings shall comply with the requirements of the TXMUTCD unless specifically directed by the city's traffic engineer or approved in writing by the city's representative.

5. Barricades, signs, channelizing devices, and traffic handling devices as shown shall be adjusted to fit field conditions.

6. Contractor shall maintain traffic lane(s) according to the traffic control plans (TCP) 24 hours per day and throughout the duration of the project.

7. Contractor shall provide access to all businesses within the project limits at all times during construction unless otherwise authorized in writing by the city's representative.

8. Contractor shall cover open excavations with steel plates anchored to remain in-place during non-working hours, and open lanes for normal traffic flow.

9. No work will be performed in the traveled way including loading and unloading of trucks unless approved in writing by the city's representative.

10. When directed by the city's representative, the contractor shall provide flaggers to direct traffic. This does not relieve the contractor of responsibility or taking other steps and providing other personnel which the contractor may deem necessary for protection of work and the public.

11. Contractor shall insure that all signs, barricades, and channelizing devices are maintained in a clean and functional condition at all times.

12. All signs, barricades, and devices are the sole responsibility of the contractor including acts of vandalism or accident.

13. At is the contractor’s responsibility to maintain the temporary and existing pavement markings in a good visible condition throughout the length of the project.

14. Existing pavement markings shall be removed from areas that conflict with the traffic control plans.

15. All signs, barricades, and devices shall remain in place until their removal is approved in writing by the city's representative.

16. All advanced warning signs are to be set and functioning prior to the start of construction activities and to remain in place until all construction activities are complete and accepted by the city.

17. Max pavement drop-off shall not exceed 2”.

18. All flaggers shall be in radio contact with each other at all times.

19. Contractor to maintain access to driveways at all times.

20. Proposed work zone removable striping shown on plans; any existing striping that conflicts shall be removed.

21. The Box Culvert will be constructed in segments that maintain 2-lanes of traffic (1-lane in each direction) at all times. The Contractor shall install prefabricated segments in an effort to maintain traffic, to mitigate impacts from inclement weather, and to maintain the construction schedule.

22. There is a private driveway just south of Gaspar Bend and adjacent to the Public Utility Easement (P.U.E.) that is parallel to and on the south side of the Westside Preserve at Buttercup Creek Subdivision. Prior to construction of the new asphalt driveway, the Contractor shall obtain the necessary permits, permissions, and written approvals to provide temporary access to the P.U.E. for ingress/egress during driveway construction and pavement curing.

23. It is the Contractor’s responsibility to maintain access at all driveway / intersection locations; a minimum of half-drive access, signage, traffic control, and flagmen as necessary to control and direct traffic. The Contractor is encourage to use black base during inclement weather to preserve and protect the compacted base and subbase from water intrusion prior to final paving operations. If the Contractor chooses to use black base, this will be subsidiary.

NUMBER	DATE	REVISION	APPROVED

STATE OF TEXAS
GREGORY C. CALKINS
111309
LICENSED
PROFESSIONAL ENGINEER
10/06/2016

CEDAR PARK

Binkley & Barfield, Inc
consulting engineers
Texas Registration Number F-257

ANDERSON MILL ROAD
GASPAR BEND TO WHITESTONE BLVD
TRAFFIC CONTROL CONSTRUCTION SEQUENCING NARRATIVE

DESIGN BY:	GCC	SCALE: NTS	
DRAWN BY:	DSH		
CHECKED BY:	DRE		
APPROVED BY:	BDR	SHEET: 1 OF 1	
PROJECT NO:	156402		
DATE:	10/6/2016	PAGE: 28	

10/6/2016
8:47:31 AM
...\CADD\SHEETS\TCS01*AM*01.dgn

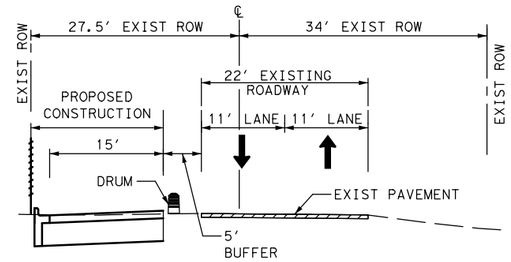

PHASE 1 TYPICAL SECTION A-A

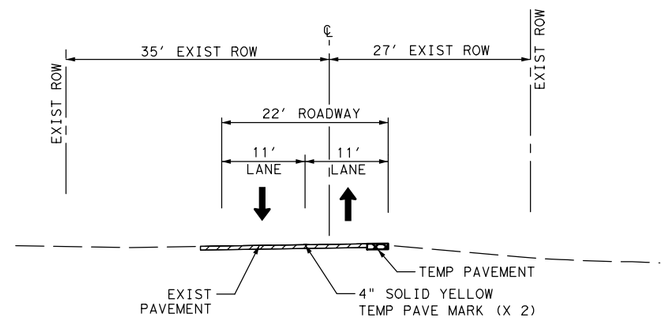

PHASE 1 TYPICAL SECTION B-B

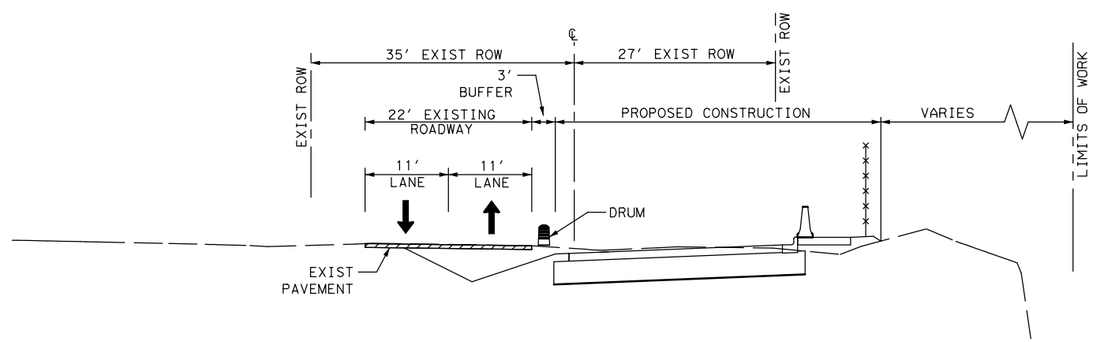

PHASE 1 TYPICAL SECTION C-C

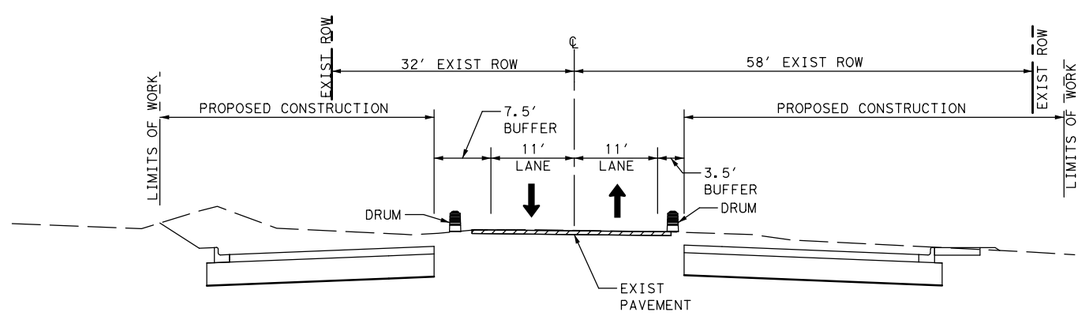

PHASE 1 TYPICAL SECTION D-D

NUMBER	DATE	REVISION	APPROVED

STATE OF TEXAS
GREGORY C. CALKINS
111309
LICENSED
PROFESSIONAL ENGINEER

10/06/2016

CEDAR PARK

Binkley & Barfield, Inc
consulting engineers
Texas Registration Number F-257

ANDERSON MILL ROAD
GASPAR BEND TO WHITESTONE BLVD
TRAFFIC CONTROL TYPICALS
PHASE 1

DESIGN BY:	GCC	SCALE: NTS	
DRAWN BY:	DSH		
CHECKED BY:	DRE		
APPROVED BY:	BDR	SHEET: 1 OF 1	
PROJECT NO:	156402		
DATE:	10/6/2016	PAGE: 29	

10/6/2016
8:47:35 AM
...\CADD\SHEETS\TCTY1*AM*01.dgn

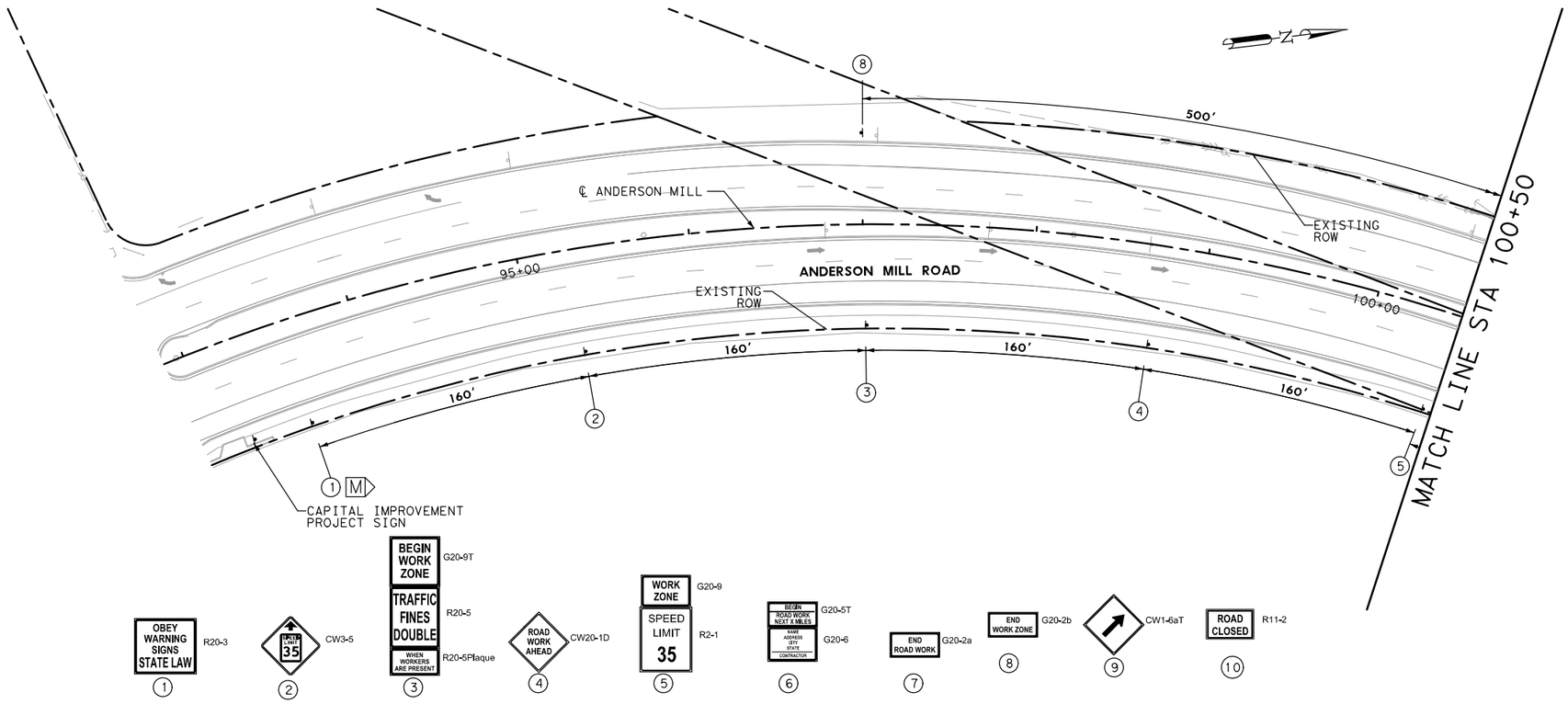

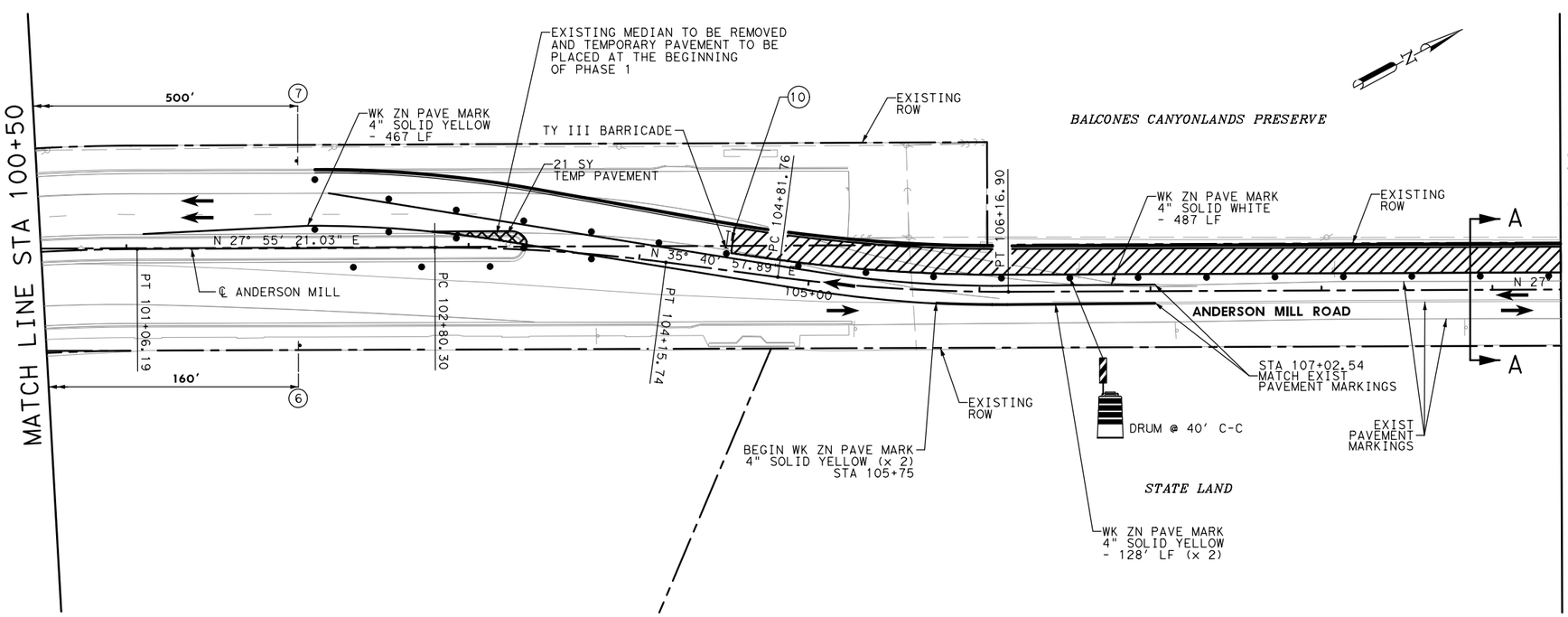

NOTE: SEE SHEET 29 FOR TYPICAL SECTION A-A.

LEGEND

- TEMPORARY PAVEMENT
- PHASE 1 CONSTRUCTION
- PHASE 1A CONSTRUCTION
- PHASE 2 CONSTRUCTION
- COMPLETED CONSTRUCTION
- M — MESSAGE BOARD

NOTES:

1. TEMPORARY PAVEMENT SHALL CONSIST OF 2" HMAC OVER 5" FLEX BASE AND WILL BE PAID FOR BY TXDOT ITEM 508-6001 - CONSTRUCTING DETOURS.

NUMBER	DATE	REVISION	APPROVED

STATE OF TEXAS
GREGORY C. CALKINS
111309
LICENSED
PROFESSIONAL ENGINEER
10/06/2016

CEDAR PARK

Binkley & Barfield, Inc
consulting engineers
Texas Registration Number F-257

ANDERSON MILL ROAD
GASPAR BEND TO WHITESTONE BLVD
TRAFFIC CONTROL
PHASE 1
BEGIN PROJECT - STA 109+40

DESIGN BY:	GCC	SCALE:	1"=80'
DRAWN BY:	DSH		
CHECKED BY:	DRE	SHEET:	1 OF 5
APPROVED BY:	BDR		
PROJECT NO:	156402	PAGE:	30
DATE:	10/6/2016		

10/6/2016
8:47:40 AM
...\CADD\SHEETS\TCSH1*P1S1*01.dgn

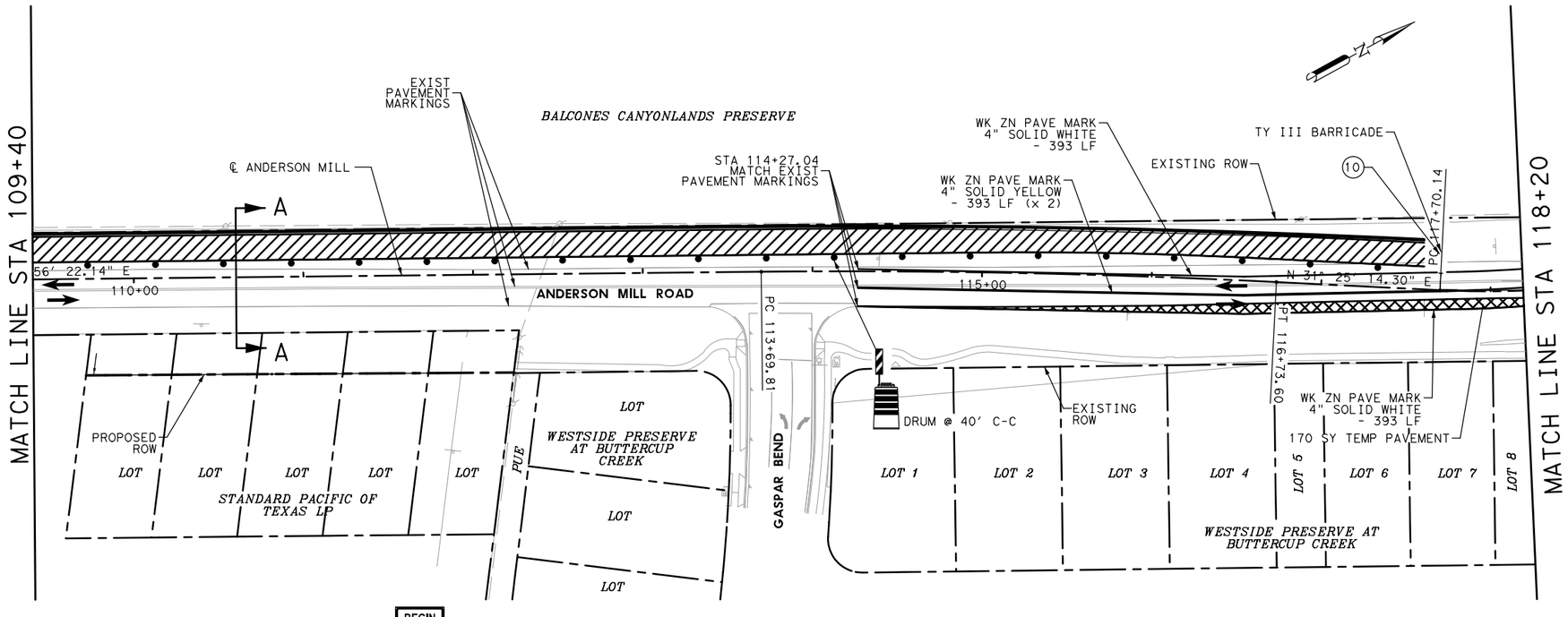

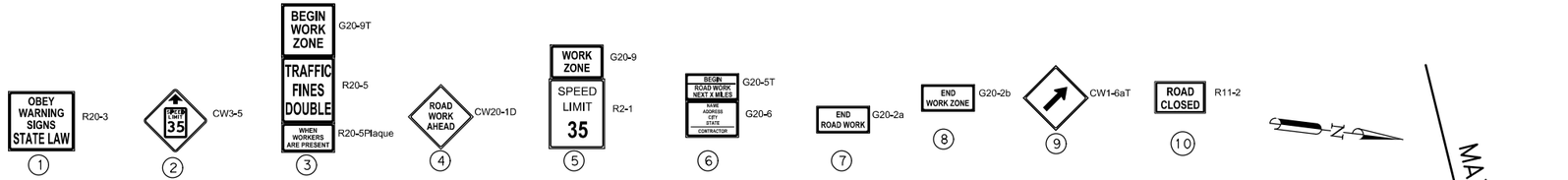

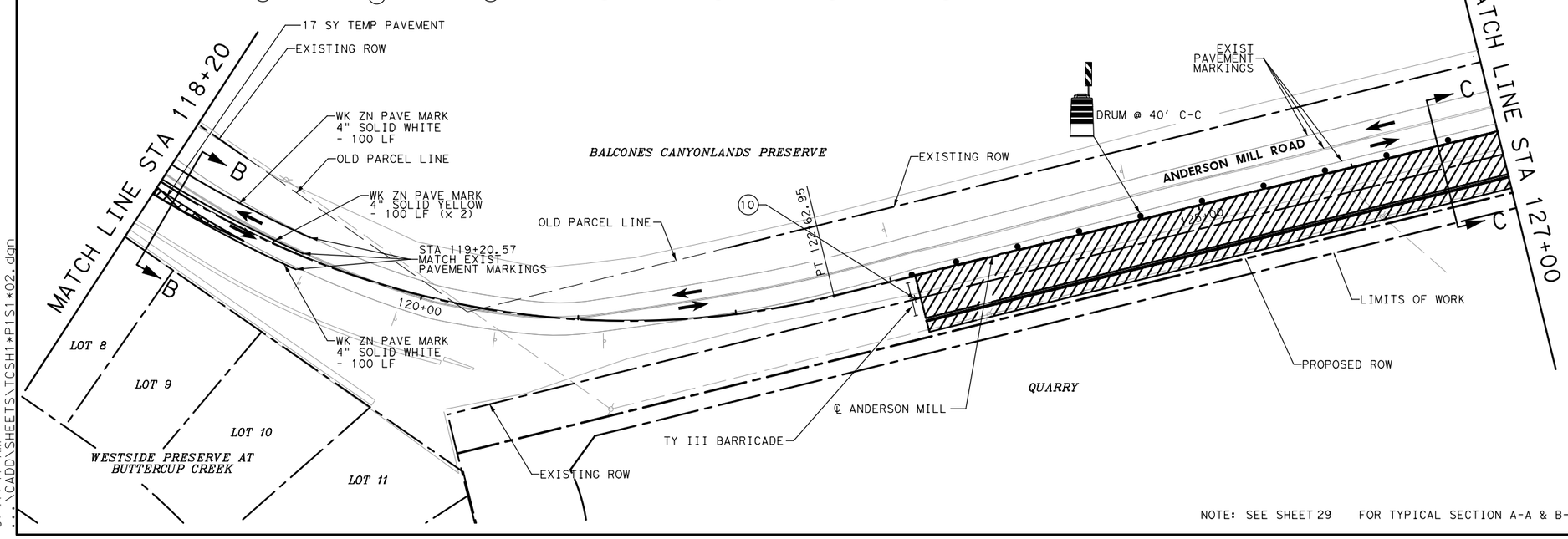

NOTE: SEE SHEET 29 FOR TYPICAL SECTION A-A & B-B.

0' 20' 40' 80'

LEGEND

- TEMPORARY PAVEMENT
- PHASE 1 CONSTRUCTION
- PHASE 1A CONSTRUCTION
- PHASE 2 CONSTRUCTION
- COMPLETED CONSTRUCTION
- MESSAGE BOARD

NOTES:

1. TEMPORARY PAVEMENT SHALL CONSIST OF 2" HMAC OVER 5" FLEX BASE AND WILL BE PAID FOR BY TXDOT ITEM 508-6001 - CONSTRUCTING DETOURS.

NUMBER	DATE	REVISION	APPROVED

STATE OF TEXAS
GREGORY C. CALKINS
111309
LICENSED
PROFESSIONAL ENGINEER
10/06/2016

CEDAR PARK

Binkley & Barfield, Inc
consulting engineers
Texas Registration Number F-257

ANDERSON MILL ROAD
GASPAR BEND TO WHITESTONE BLVD
TRAFFIC CONTROL PHASE 1
STA 109+40 - STA 127+00

DESIGN BY:	GCC	SCALE:	1"=80'
DRAWN BY:	DSH		
CHECKED BY:	DRE		
APPROVED BY:	BDR	SHEET:	2 OF 5
PROJECT NO:	156402		
DATE:	10/6/2016	PAGE:	31

10/6/2016
8:47:41 AM
...\CADD\SHEETS\TCSH1*P1S1*02.dgn

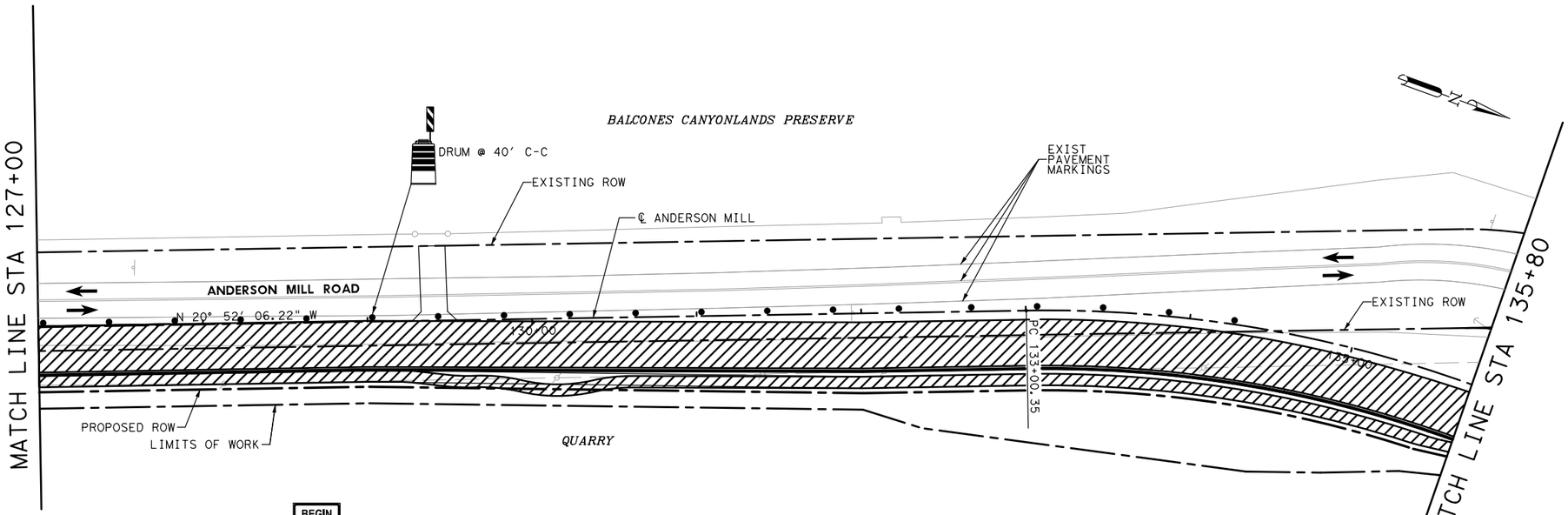

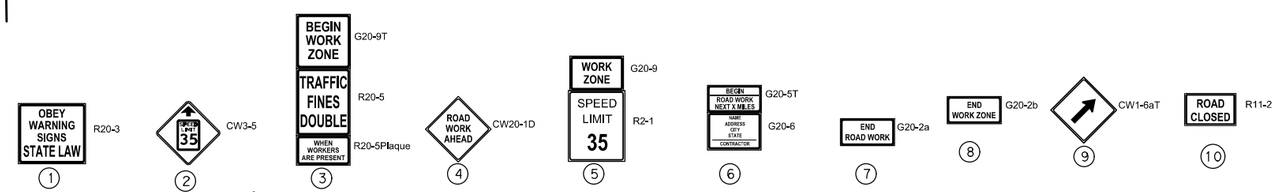

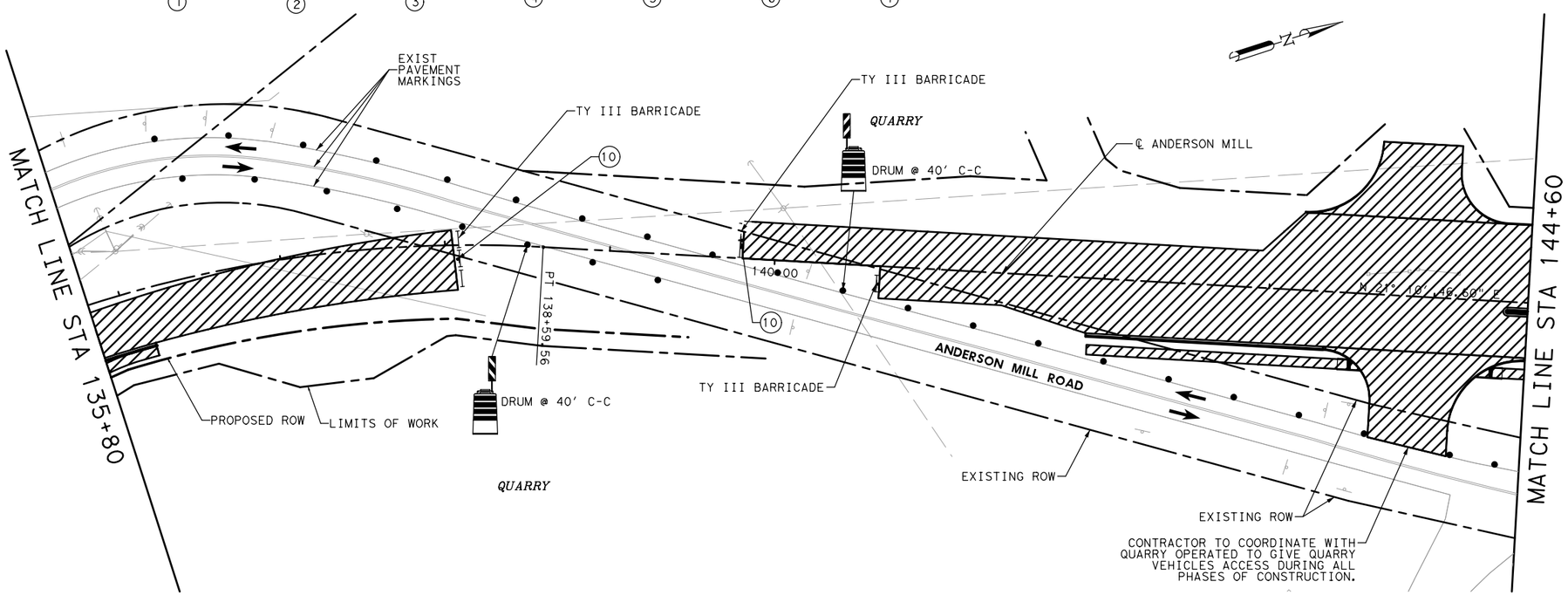

0' 20' 40' 80'

LEGEND

- TEMPORARY PAVEMENT
- PHASE 1 CONSTRUCTION
- PHASE 1A CONSTRUCTION
- PHASE 2 CONSTRUCTION
- COMPLETED CONSTRUCTION
- MESSAGE BOARD

NOTE 1:
CONTRACTOR TO COORDINATE WITH QUARRY OPERATED TO GIVE QUARRY VEHICLES ACCESS DURING ALL PHASES OF CONSTRUCTION.

NUMBER	DATE	REVISION	APPROVED

STATE OF TEXAS
GREGORY C. CALKINS
111309
LICENSED
PROFESSIONAL ENGINEER
10/06/2016

CEDAR PARK

Binkley & Barfield, Inc
consulting engineers
Texas Registration Number F-257

ANDERSON MILL ROAD
GASPAR BEND TO WHITESTONE BLVD
TRAFFIC CONTROL PHASE 1
STA 127+00 - STA 144+60

DESIGN BY:	GCC
DRAWN BY:	DSH
CHECKED BY:	DRE
APPROVED BY:	BDR
PROJECT NO:	156402
DATE:	10/6/2016

SCALE: 1"=80'

SHEET: 3 OF 5

PAGE: 32

10/6/2016
8:47:42 AM
...\CADD\SHEETS\TCSH1*P1S1*03.dgn

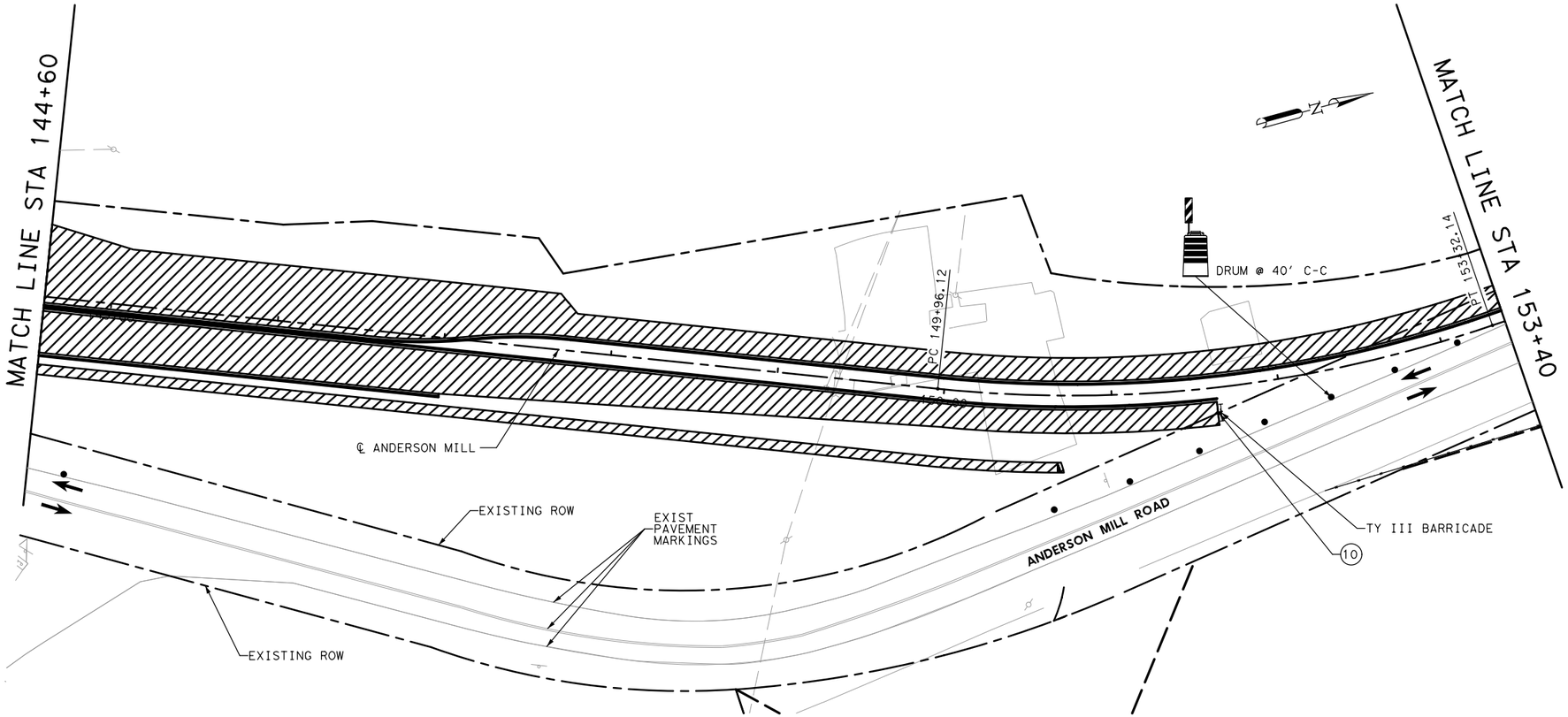

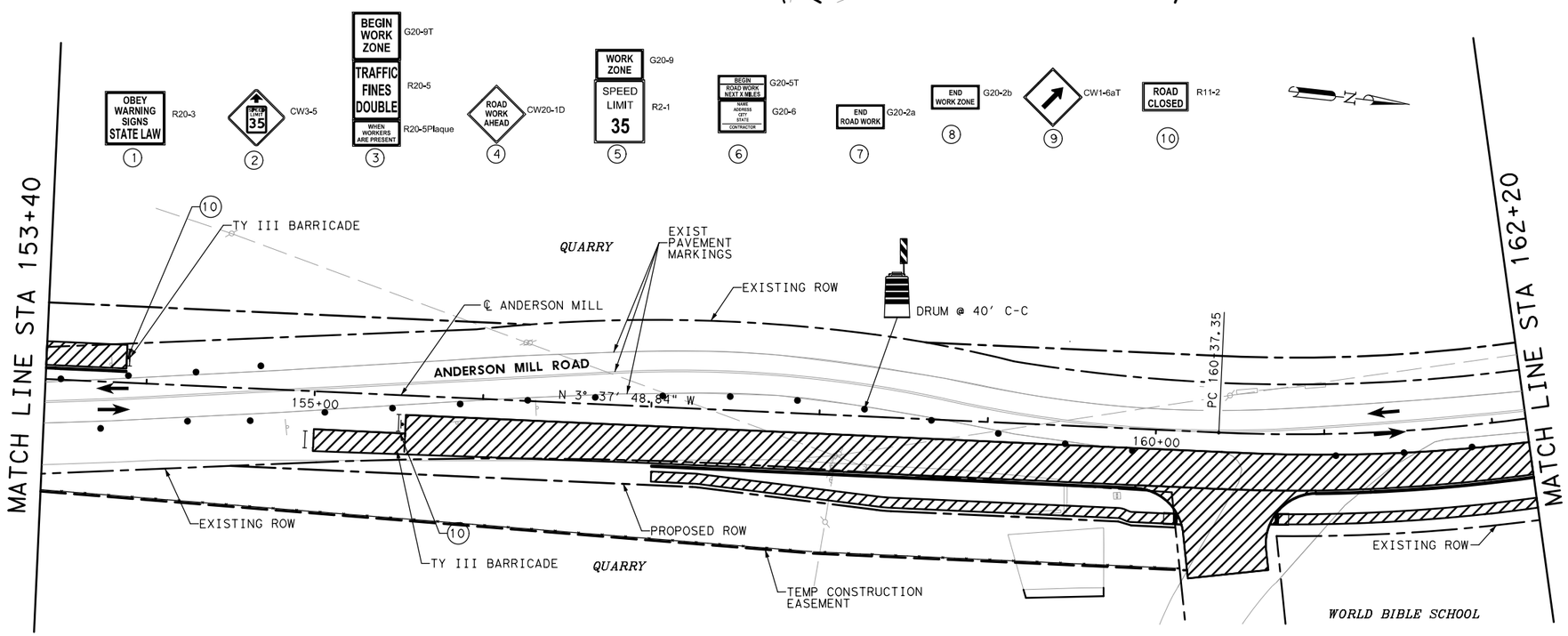

0' 20' 40' 80'

LEGEND

- TEMPORARY PAVEMENT
- PHASE 1 CONSTRUCTION
- PHASE 1A CONSTRUCTION
- PHASE 2 CONSTRUCTION
- COMPLETED CONSTRUCTION
- MESSAGE BOARD

NUMBER	DATE	REVISION	APPROVED

STATE OF TEXAS
GREGORY C. CALKINS
111309
LICENSED
PROFESSIONAL ENGINEER
10/06/2016

CEDAR PARK

Binkley & Barfield, Inc
consulting engineers
Texas Registration Number F-257

ANDERSON MILL ROAD
GASPAR BEND TO WHITESTONE BLVD
TRAFFIC CONTROL PHASE 1
STA 144+60 - STA 162+20

DESIGN BY:	GCC	SCALE:	1"=80'
DRAWN BY:	DSH		
CHECKED BY:	DRE	SHEET:	4 OF 5
APPROVED BY:	BDR		
PROJECT NO:	156402	PAGE:	33
DATE:	10/6/2016		

10/6/2016
8:47:44 AM
...\CADD\SHEETS\TCSH1*P1S1*04.dgn

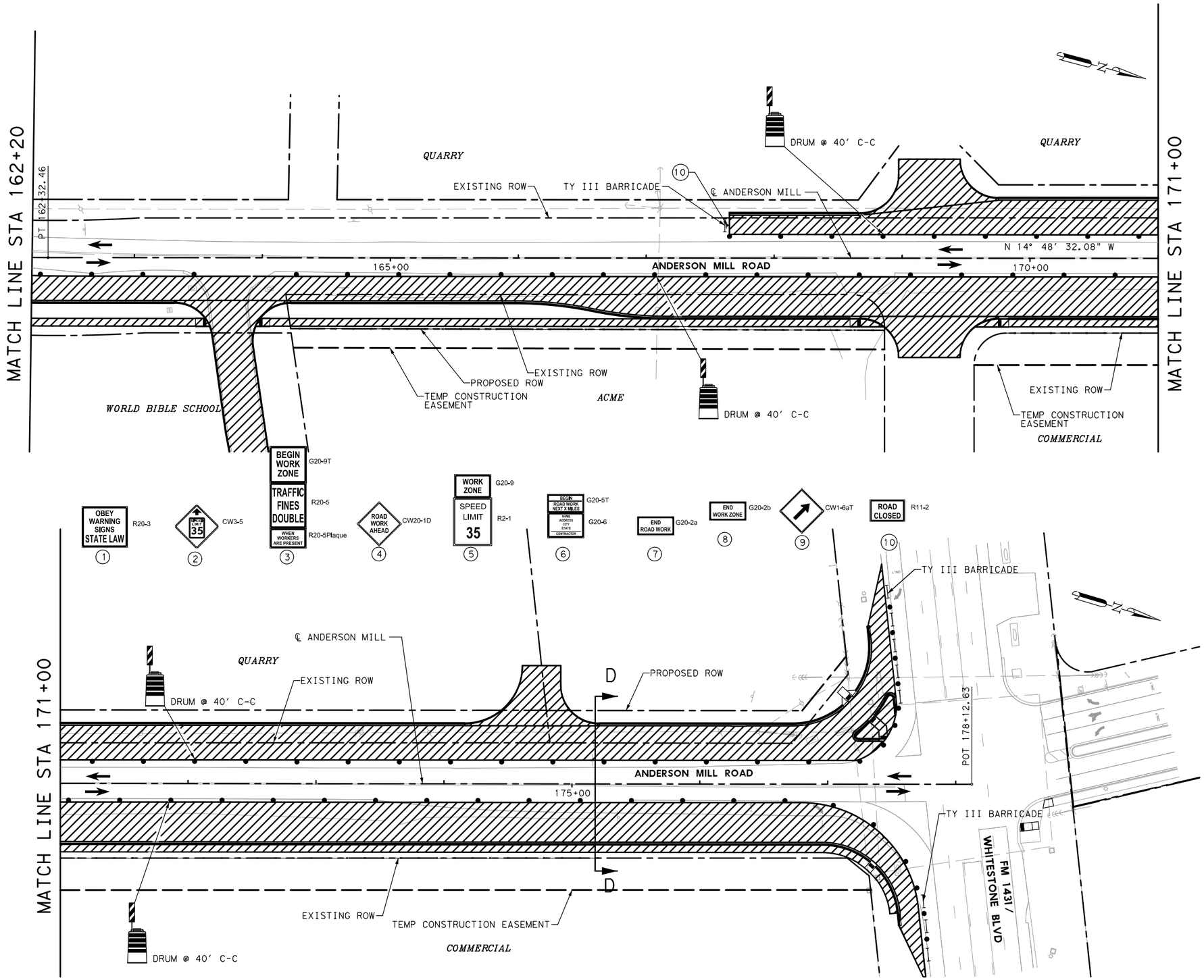

0' 20' 40' 80'

LEGEND

- TEMPORARY PAVEMENT
- PHASE 1 CONSTRUCTION
- PHASE 1A CONSTRUCTION
- PHASE 2 CONSTRUCTION
- COMPLETED CONSTRUCTION
- MESSAGE BOARD

NOTE: SEE SHEET 29 FOR TYPICAL SECTION D-D.

NUMBER	DATE	REVISION	APPROVED

STATE OF TEXAS
GREGORY C. CALKINS
111309
LICENSED
PROFESSIONAL ENGINEER
10/06/2016

CEDAR PARK

Binkley & Barfield, Inc
consulting engineers
Texas Registration Number F-257

ANDERSON MILL ROAD
GASPAR BEND TO WHITESTONE BLVD
TRAFFIC CONTROL PHASE 1
STA 162+20 - END PROJECT

DESIGN BY:	GCC	SCALE:	1"=80'
DRAWN BY:	DSH		
CHECKED BY:	DRE	SHEET:	5 OF 5
APPROVED BY:	BDR		
PROJECT NO:	156402	PAGE:	34
DATE:	10/6/2016		

10/6/2016
8:47:45 AM
...\CADD\SHEETS\TCSH1*P1S1*05.dgn

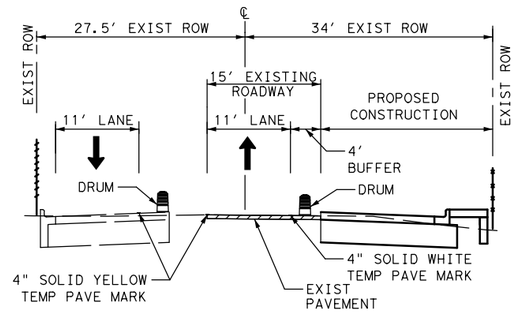

PHASE 1A TYPICAL SECTION A-A

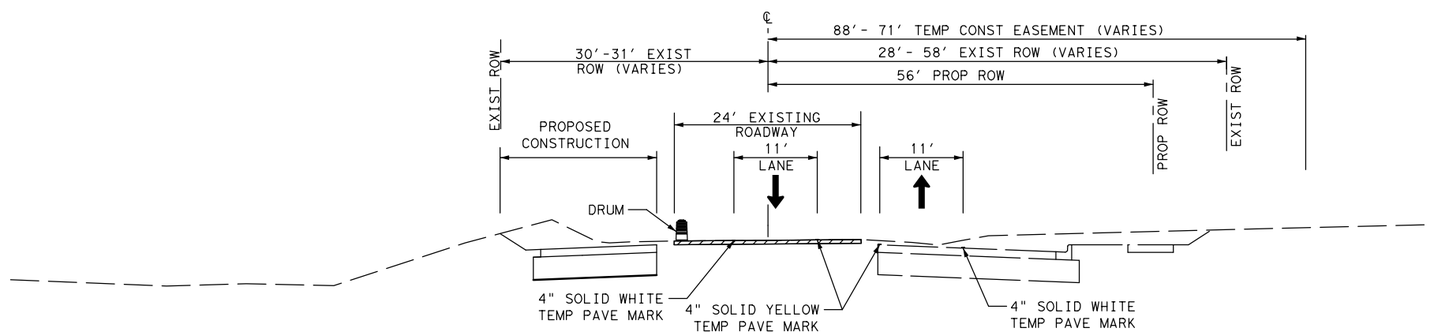

PHASE 1A TYPICAL SECTION B-B

NUMBER	DATE	REVISION	APPROVED

STATE OF TEXAS
GREGORY C. CALKINS
111309
LICENSED
PROFESSIONAL ENGINEER
10/06/2016

CEDAR PARK

Binkley & Barfield, Inc
consulting engineers
Texas Registration Number F-257

ANDERSON MILL ROAD
GASPAR BEND TO WHITESTONE BLVD
TRAFFIC CONTROL TYPICALS
PHASE 1A

DESIGN BY:	GCC	SCALE: NTS	
DRAWN BY:	DSH		
CHECKED BY:	DRE		
APPROVED BY:	BDR	SHEET: 1 OF 1	
PROJECT NO:	156402		
DATE:	10/6/2016	PAGE: 35	

10/6/2016
8:47:46 AM
...\CADD\SHEETS\TCTY1*AM*02.dgn

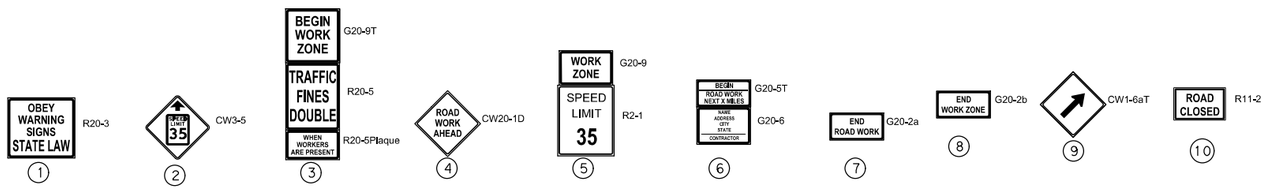

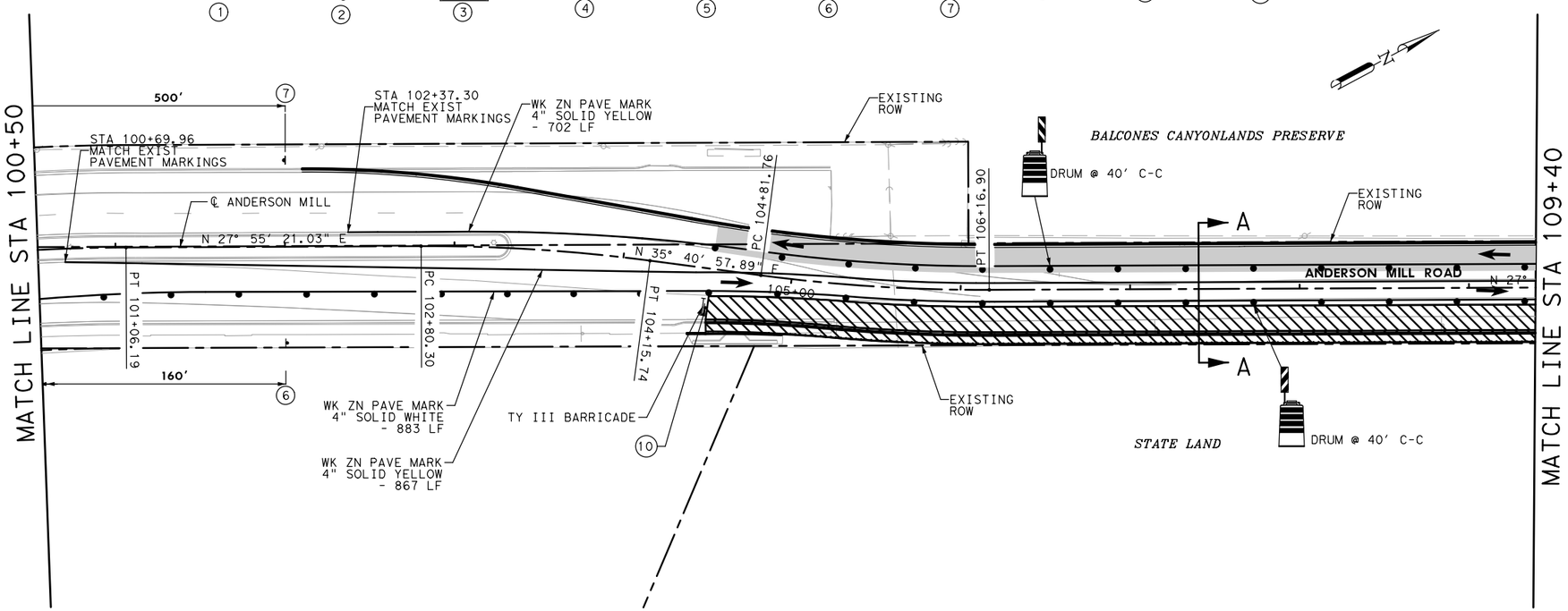

NOTE: SEE SHEET 35 FOR TYPICAL SECTION A-A.

LEGEND

- TEMPORARY PAVEMENT
- PHASE 1 CONSTRUCTION
- PHASE 1A CONSTRUCTION
- PHASE 2 CONSTRUCTION
- COMPLETED CONSTRUCTION
- MESSAGE BOARD

NUMBER	DATE	REVISION	APPROVED

STATE OF TEXAS
GREGORY C. CALKINS
111309
LICENSED
PROFESSIONAL ENGINEER
10/06/2016

CEDAR PARK

Binkley & Barfield, Inc
consulting engineers
Texas Registration Number F-257

ANDERSON MILL ROAD
GASPAR BEND TO WHITESTONE BLVD
TRAFFIC CONTROL PHASE 1A
BEGIN PROJECT - STA 109+40

DESIGN BY:	GCC	SCALE: 1"=80'	
DRAWN BY:	DSH		
CHECKED BY:	DRE		
APPROVED BY:	BDR	SHEET: 1 OF 5	
PROJECT NO:	156402		
DATE:	10/6/2016	PAGE: 36	

10/6/2016
8:47:50 AM
...\CADD\SHEETS\TCSH1*P1S2*01.dgn

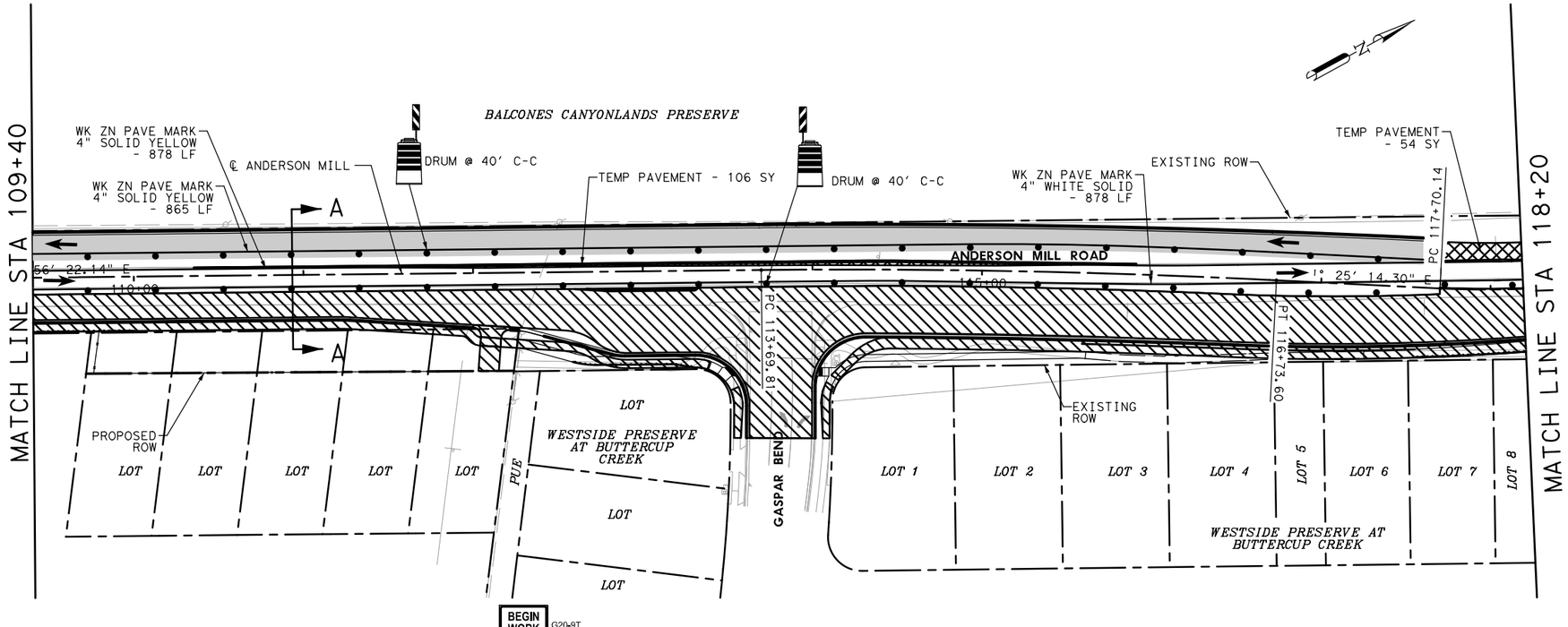

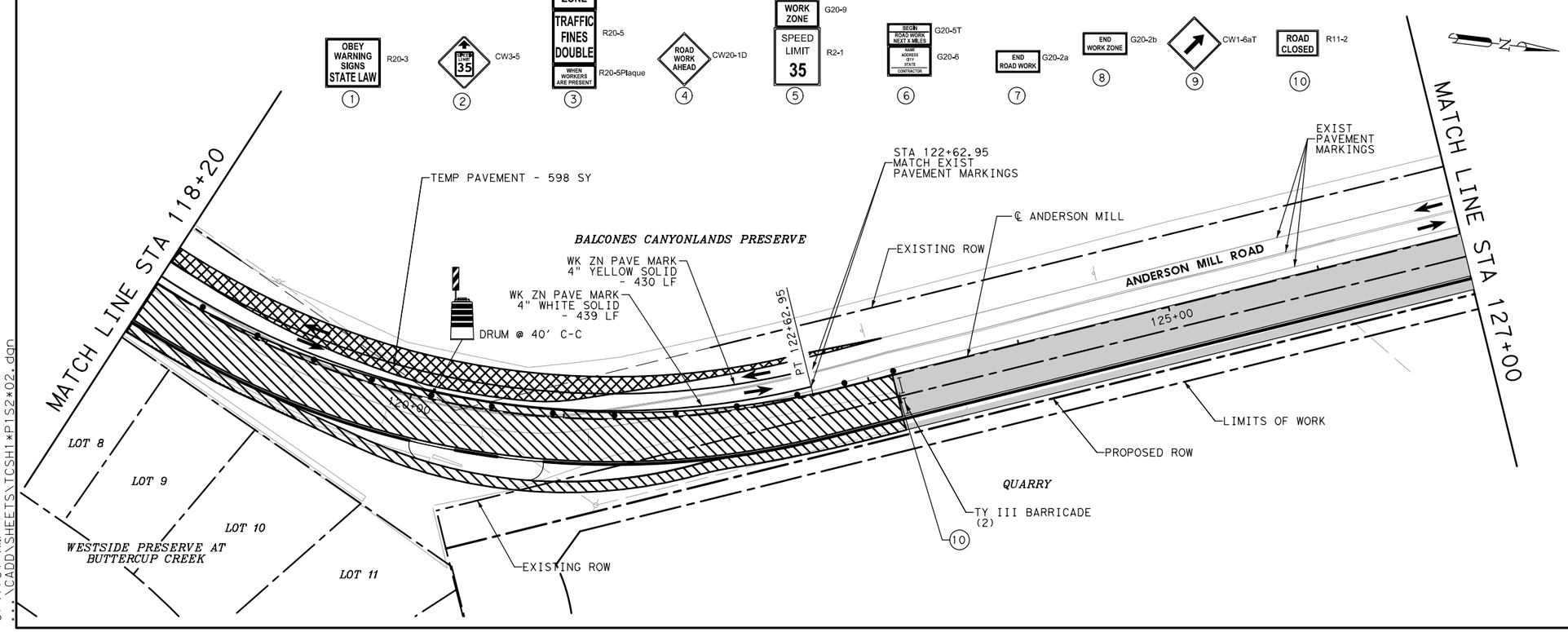

0' 20' 40' 80'

LEGEND

- TEMPORARY PAVEMENT
- PHASE 1 CONSTRUCTION
- PHASE 1A CONSTRUCTION
- PHASE 2 CONSTRUCTION
- COMPLETED CONSTRUCTION
- MESSAGE BOARD

NOTES:

1. TEMPORARY PAVEMENT SHALL CONSIST OF 2" HMAC OVER 5" FLEX BASE AND WILL BE PAID FOR BY TXDOT ITEM 508-6001 - CONSTRUCTING DETOURS.
2. CONTRACTOR SHALL USE BLACK BASE DURING SUBGRADE PLACEMENT FOR THE CONSTRUCTION OF GASPAR BEND AS DIRECTED BY THE CITY'S REPRESENTATIVE. ITEM WILL BE SUBSIDIARY TO 340S-B.

NUMBER	DATE	REVISION	APPROVED

STATE OF TEXAS
GREGORY C. CALKINS
111309
LICENSED
PROFESSIONAL ENGINEER
10/06/2016

CEDAR PARK

Binkley & Barfield, Inc
consulting engineers
Texas Registration Number F-257

ANDERSON MILL ROAD
GASPAR BEND TO WHITESTONE BLVD
TRAFFIC CONTROL PHASE 1A
STA 109+40 - STA 127+00

DESIGN BY:	GCC	SCALE:	1"=80'
DRAWN BY:	DSH		
CHECKED BY:	DRE		
APPROVED BY:	BDR	SHEET:	2 OF 5
PROJECT NO:	156402		
DATE:	10/6/2016	PAGE:	37

10/6/2016
8:47:51 AM
...\CADD\SHEETS\TCSH1*P1S2*02.dgn

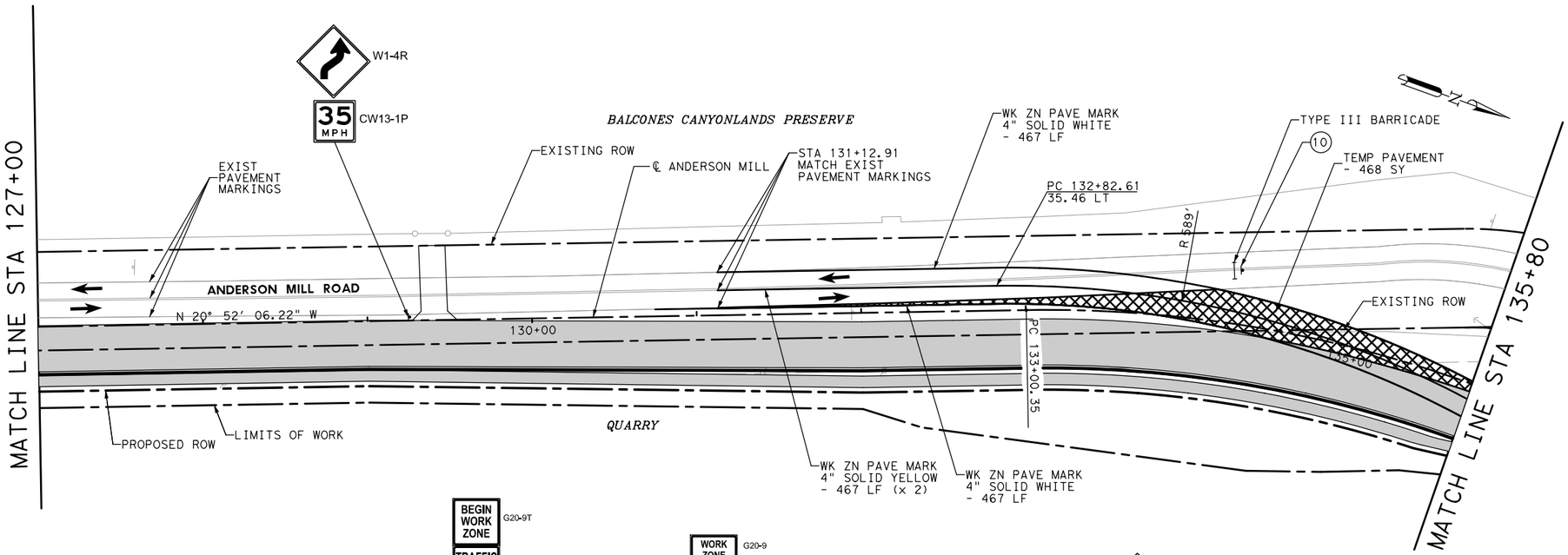

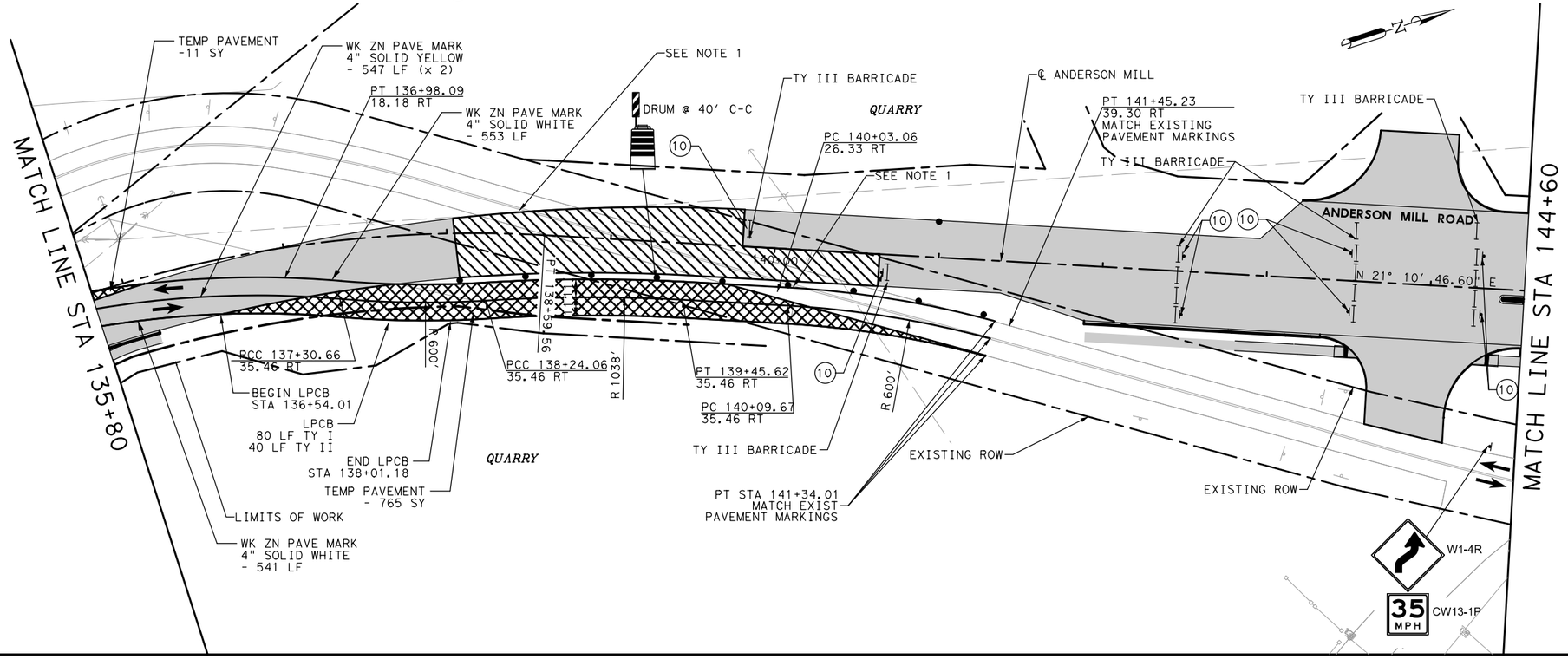

0' 20' 40' 80'

LEGEND

- TEMPORARY PAVEMENT
- PHASE 1 CONSTRUCTION
- PHASE 1A CONSTRUCTION
- PHASE 2 CONSTRUCTION
- COMPLETED CONSTRUCTION
- MESSAGE BOARD

NOTES:

1. LEVEL-UP TO BE PLACED AS NEEDED TO PROVIDE A SMOOTH TRANSITION BETWEEN THE EXISTING AND PROPOSED PAVEMENT. ITEM WILL BE SUBSIDIARY TO 340S-B.
2. TEMPORARY PAVEMENT SHALL CONSIST OF 2" HMAC OVER 5" FLEX BASE AND WILL BE PAID FOR BY TXDOT ITEM 508-6001 - CONSTRUCTING DETOURS.

NUMBER	DATE	REVISION	APPROVED

STATE OF TEXAS
GREGORY C. CALKINS
111309
LICENSED
PROFESSIONAL ENGINEER
10/06/2016

CEDAR PARK

Binkley & Barfield, Inc
consulting engineers
Texas Registration Number F-257

ANDERSON MILL ROAD
GASPAR BEND TO WHITESTONE BLVD
TRAFFIC CONTROL PHASE 1A
STA 127+00 - STA 144+60

DESIGN BY:	GCC
DRAWN BY:	DSH
CHECKED BY:	DRE
APPROVED BY:	BDR
PROJECT NO:	156402
DATE:	10/6/2016

SCALE: 1"=80'

SHEET: 3 OF 5

PAGE: 38

10/6/2016
8:47:52 AM
...\CADD\SHEETS\TCSH1*P1S2*03.dgn

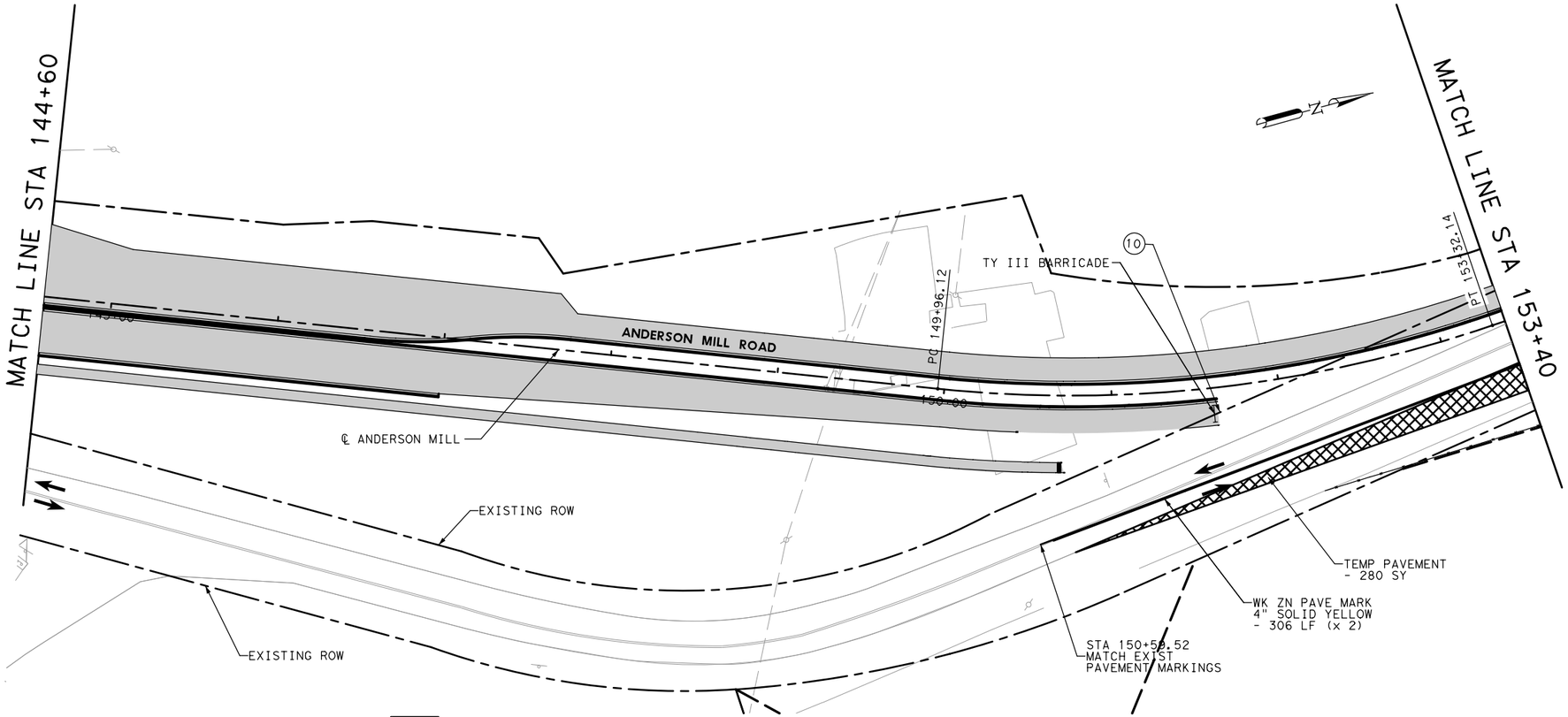

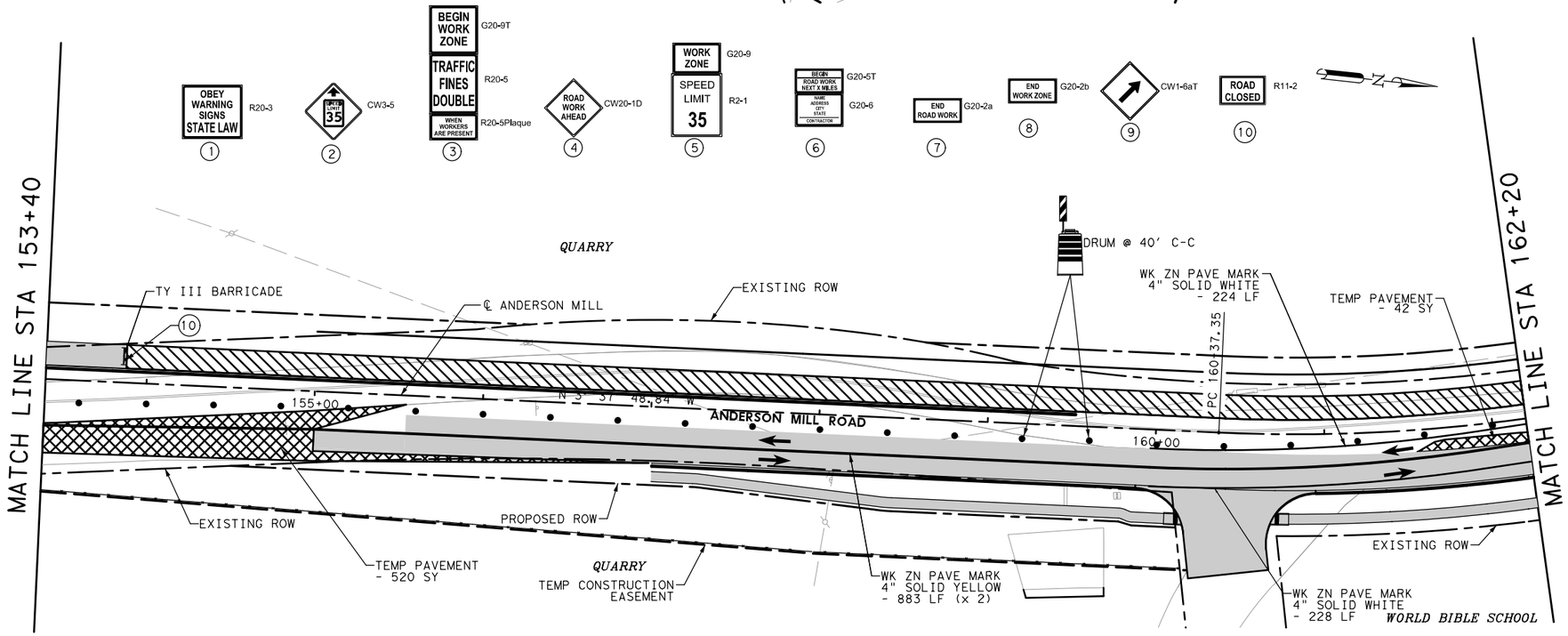

0' 20' 40' 80'

LEGEND

- TEMPORARY PAVEMENT
- PHASE 1 CONSTRUCTION
- PHASE 1A CONSTRUCTION
- PHASE 2 CONSTRUCTION
- COMPLETED CONSTRUCTION
- MESSAGE BOARD

NOTES:

1. TEMPORARY PAVEMENT SHALL CONSIST OF 2" HMAC OVER 5" FLEX BASE AND WILL BE PAID FOR BY TXDOT ITEM 508-6001 - CONSTRUCTING DETOURS.

NUMBER	DATE	REVISION	APPROVED

STATE OF TEXAS
GREGORY C. CALKINS
111309
LICENSED
PROFESSIONAL ENGINEER
10/06/2016

CEDAR PARK

Binkley & Barfield, Inc
consulting engineers
Texas Registration Number F-257

ANDERSON MILL ROAD
GASPAR BEND TO WHITESTONE BLVD
TRAFFIC CONTROL PHASE 1A
STA 144+60 - STA 162+20

DESIGN BY:	GCC	SCALE:	1"=80'
DRAWN BY:	DSH		
CHECKED BY:	DRE		
APPROVED BY:	BDR	SHEET:	4 OF 5
PROJECT NO:	156402		
DATE:	10/6/2016	PAGE:	39

10/6/2016
8:47:53 AM
...\CADD\SHEETS\TCSH1*P152*04.dgn

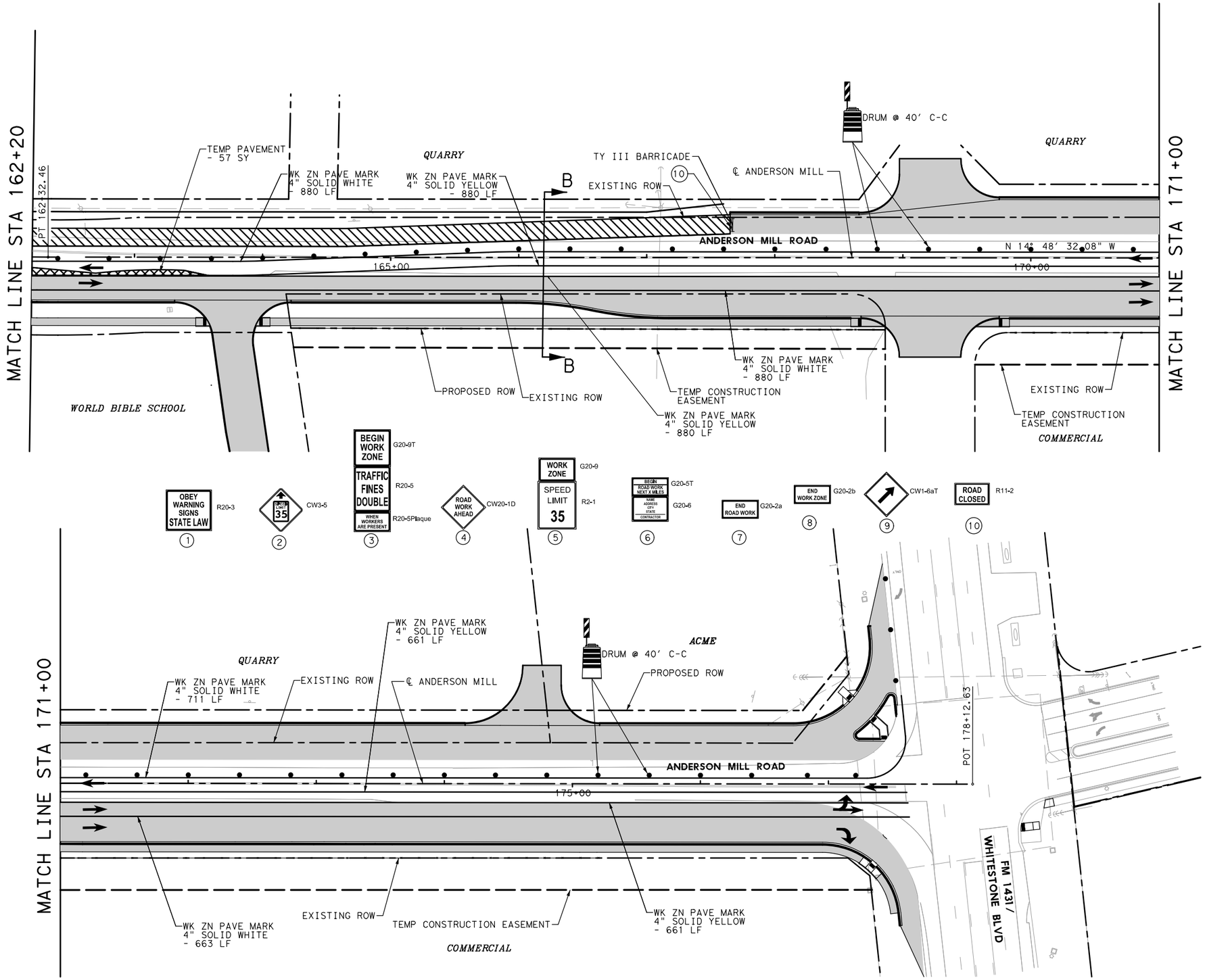

0' 20' 40' 80'

LEGEND

- TEMPORARY PAVEMENT
- PHASE 1 CONSTRUCTION
- PHASE 1A CONSTRUCTION
- PHASE 2 CONSTRUCTION
- COMPLETED CONSTRUCTION
- MESSAGE BOARD

NOTE: SEE SHEET 41 FOR TYPICAL SECTION B-B.

NUMBER	DATE	REVISION	APPROVED

STATE OF TEXAS
GREGORY C. CALKINS
111309
LICENSED
PROFESSIONAL ENGINEER
10/06/2016

CEDAR PARK

Binkley & Barfield, Inc
consulting engineers
Texas Registration Number F-257

ANDERSON MILL ROAD
GASPAR BEND TO WHITESTONE BLVD
TRAFFIC CONTROL

DESIGN BY:	GCC	SCALE:	
DRAWN BY:	DSH		
CHECKED BY:	DRE		
APPROVED BY:	BDR	SHEET:	5 OF 5
PROJECT NO:	156402		
DATE:	10/6/2016	PAGE:	40

10/6/2016
8:47:55 AM
...\CADD\SHEETS\TCSH1*P1S2*05.dgn

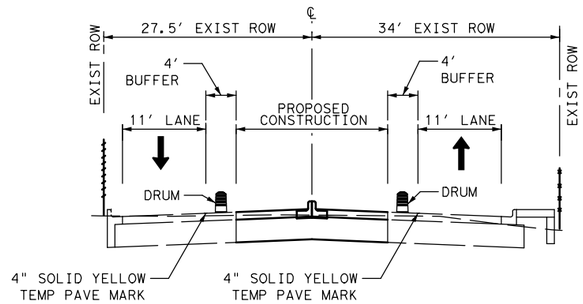

PHASE 2 TYPICAL SECTION A-A

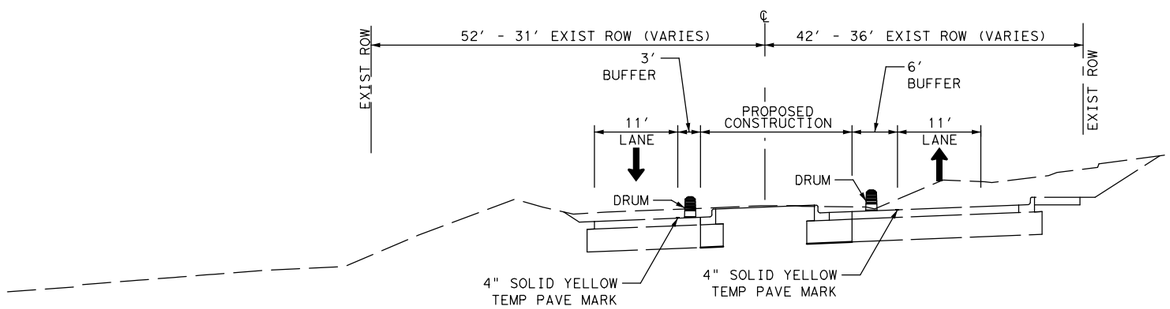

PHASE 2 TYPICAL SECTION B-B

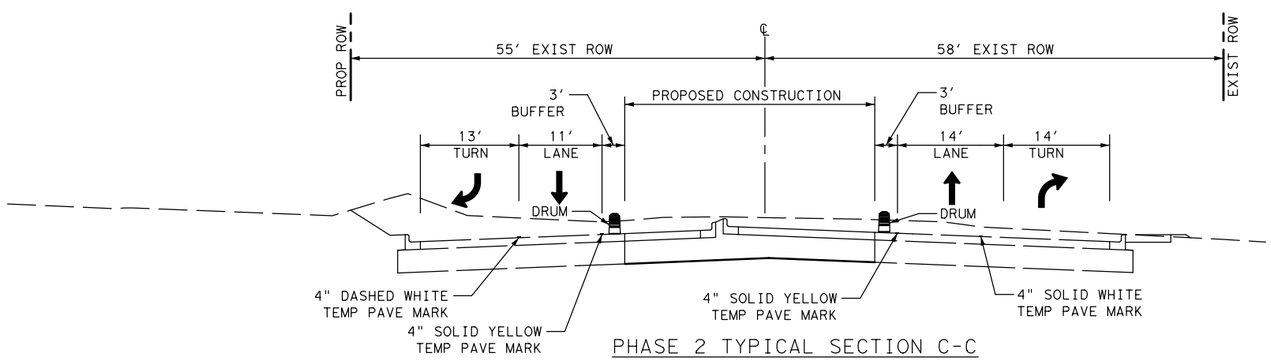

PHASE 2 TYPICAL SECTION C-C

NUMBER	DATE	REVISION	APPROVED

STATE OF TEXAS
GREGORY C. CALKINS
111309
LICENSED
PROFESSIONAL ENGINEER

10/06/2016

CEDAR PARK

Binkley & Barfield, Inc
consulting engineers
Texas Registration Number F-257

ANDERSON MILL ROAD
GASPAR BEND TO WHITESTONE BLVD
TRAFFIC CONTROL TYPICALS
PHASE 2

DESIGN BY:	GCC	SCALE: NTS	
DRAWN BY:	DSH		
CHECKED BY:	DRE	SHEET: 1 OF 1	
APPROVED BY:	BDR		
PROJECT NO:	156402	PAGE: 41	
DATE:	10/6/2016		

10/6/2016
8:47:56 AM
...\CADD\SHEETS\TCTY1*AM*03.dgn

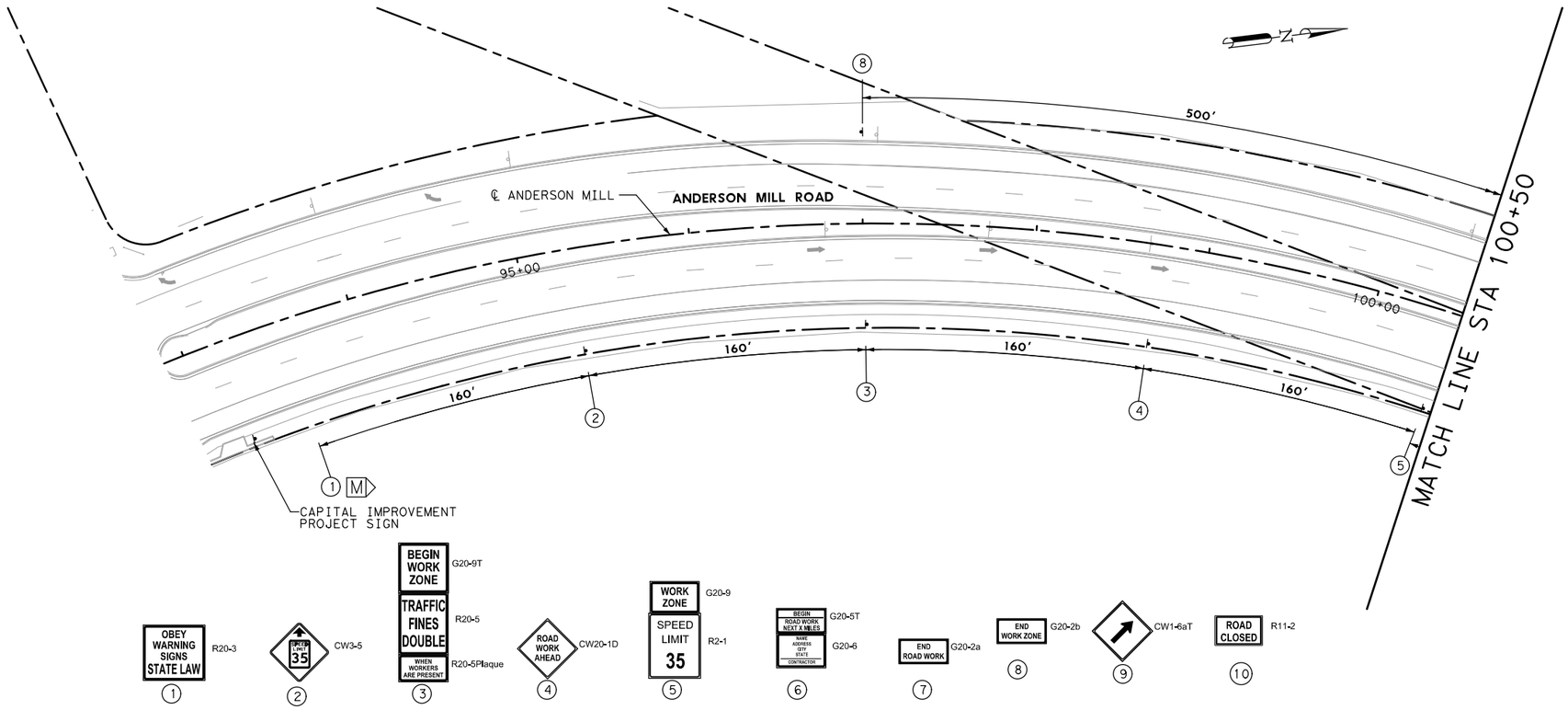

LEGEND

- TEMPORARY PAVEMENT
- PHASE 1 CONSTRUCTION
- PHASE 1A CONSTRUCTION
- PHASE 2 CONSTRUCTION
- COMPLETED CONSTRUCTION
- MESSAGE BOARD

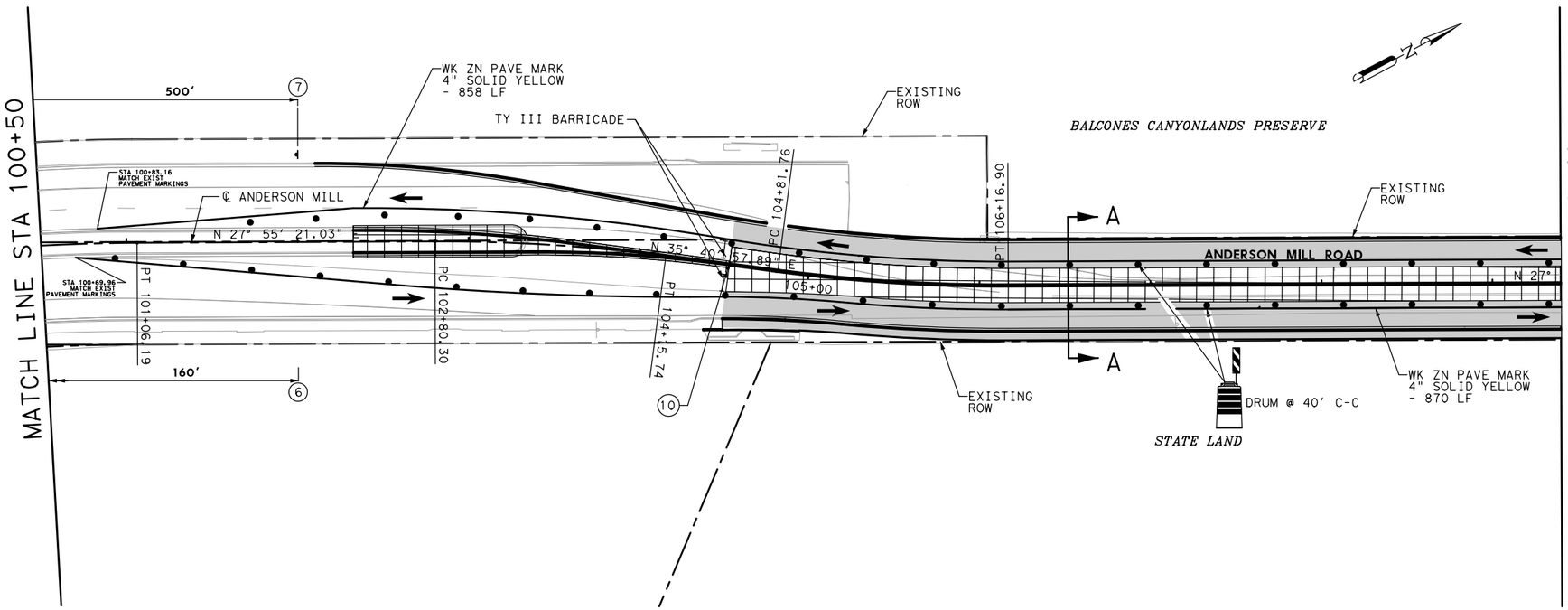

NOTE: SEE SHEET 41 FOR TYPICAL SECTION A-A.

NUMBER	DATE	REVISION	APPROVED

STATE OF TEXAS
GREGORY C. CALKINS
111309
LICENSED
PROFESSIONAL ENGINEER
10/06/2016

CEDAR PARK

Binkley & Barfield, Inc
consulting engineers
Texas Registration Number F-257

ANDERSON MILL ROAD
GASPAR BEND TO WHITESTONE BLVD
TRAFFIC CONTROL PHASE 2
BEGIN PROJECT - STA 109+40

DESIGN BY:	GCC	SCALE: 1"=80'	
DRAWN BY:	DSH		
CHECKED BY:	DRE		
APPROVED BY:	BDR	SHEET: 1 OF 5	
PROJECT NO:	156402		
DATE:	10/6/2016	PAGE: 42	

10/6/2016
8:48:00 AM
...\CADD\SHEETS\TCSH1*P2S1*01.dgn

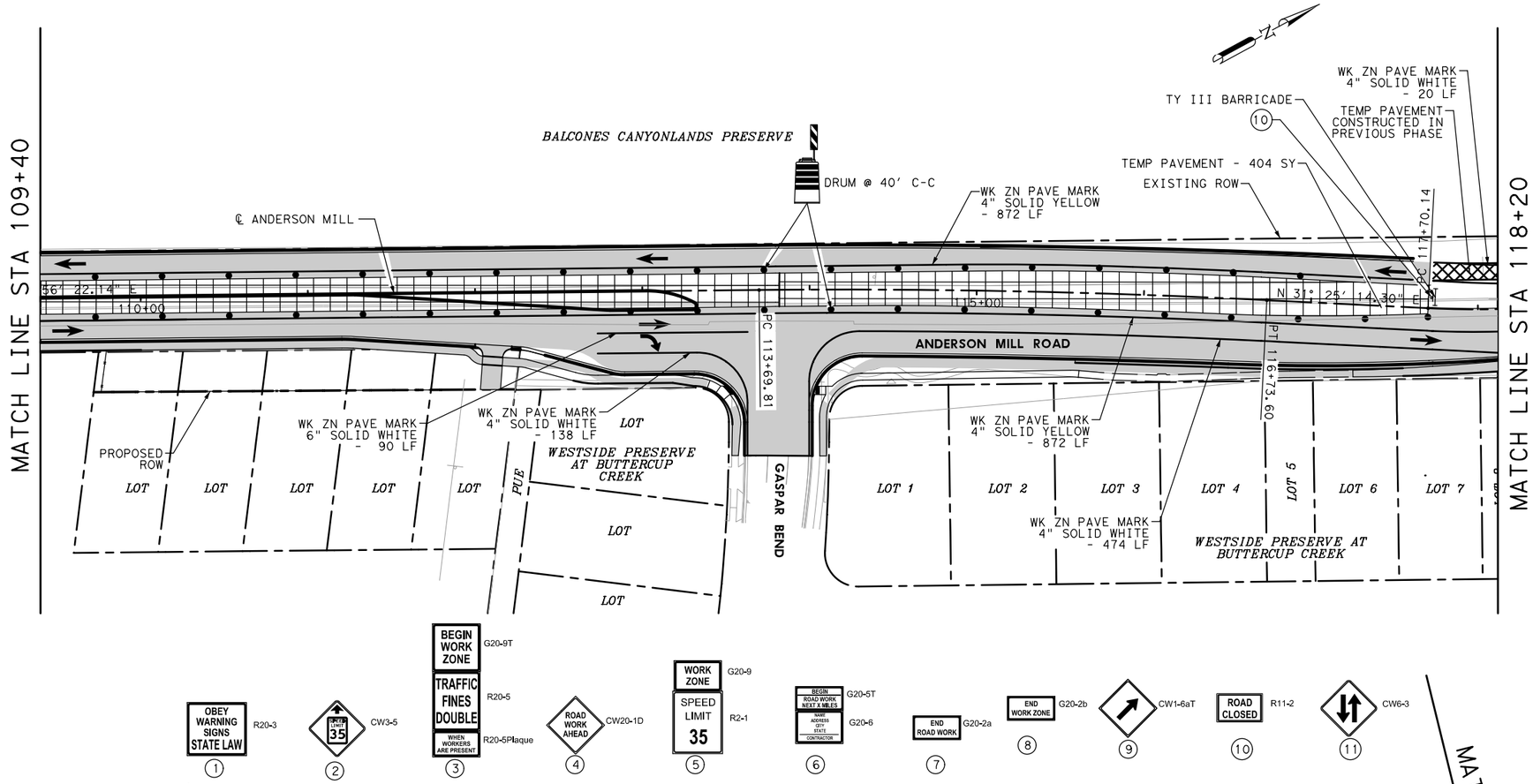

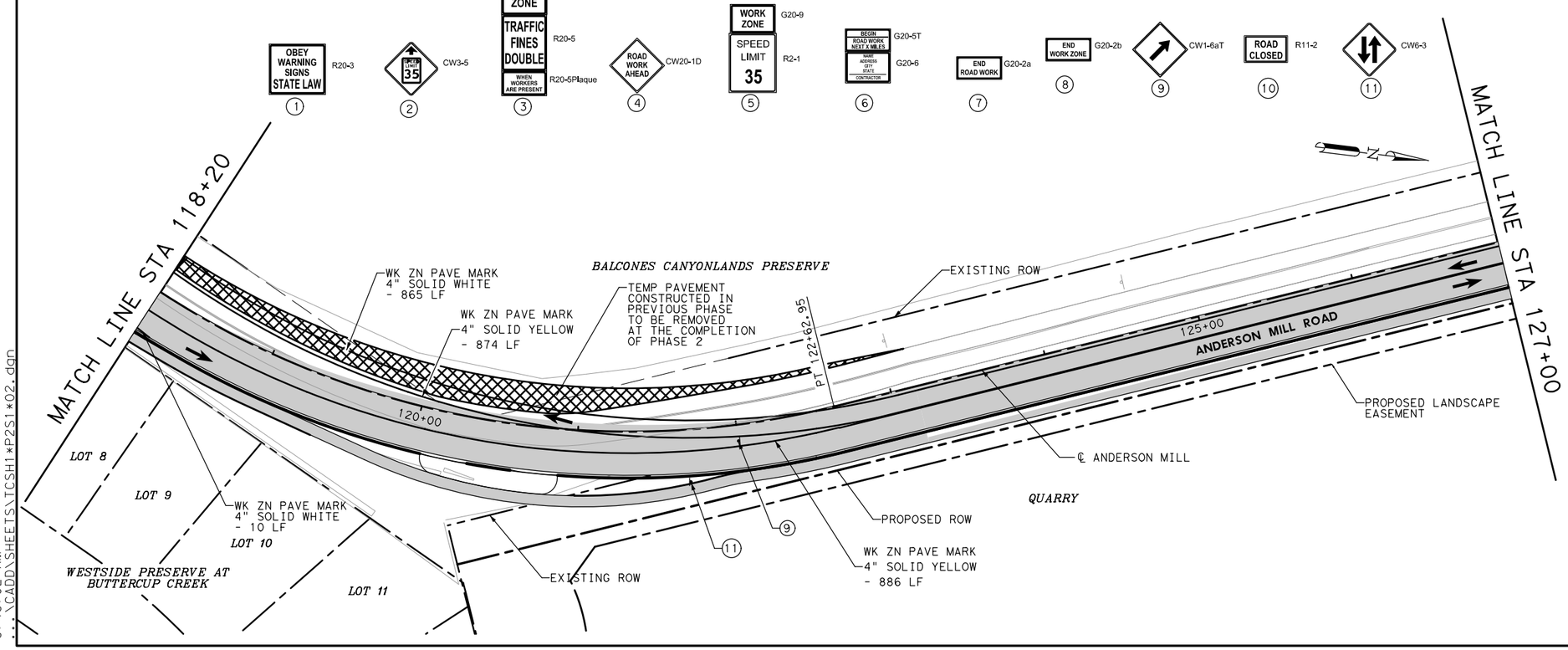

0' 20' 40' 80'

LEGEND

- TEMPORARY PAVEMENT
- PHASE 1 CONSTRUCTION
- PHASE 1A CONSTRUCTION
- PHASE 2 CONSTRUCTION
- COMPLETED CONSTRUCTION
- MESSAGE BOARD

NOTES:

1. TEMPORARY PAVEMENT SHALL CONSIST OF 2" HMAC OVER 5" FLEX BASE AND WILL BE PAID FOR BY TXDOT ITEM 508-6001 - CONSTRUCTING DETOURS.

NUMBER	DATE	REVISION	APPROVED

STATE OF TEXAS
GREGORY C. CALKINS
111309
LICENSED
PROFESSIONAL ENGINEER
10/06/2016

CEDAR PARK

Binkley & Barfield, Inc
consulting engineers
Texas Registration Number F-257

ANDERSON MILL ROAD
GASPAR BEND TO WHITESTONE BLVD
TRAFFIC CONTROL PHASE 2
STA 109+40 - STA 127+00

DESIGN BY:	GCC	SCALE: 1"=80'	
DRAWN BY:	DSH		
CHECKED BY:	DRE		
APPROVED BY:	BDR	SHEET: 2 OF 5	
PROJECT NO:	156402		
DATE:	10/6/2016	PAGE: 43	

10/6/2016
8:48:02 AM
...\CADD\SHEETS\TCSH1*P2S1*02.dgn

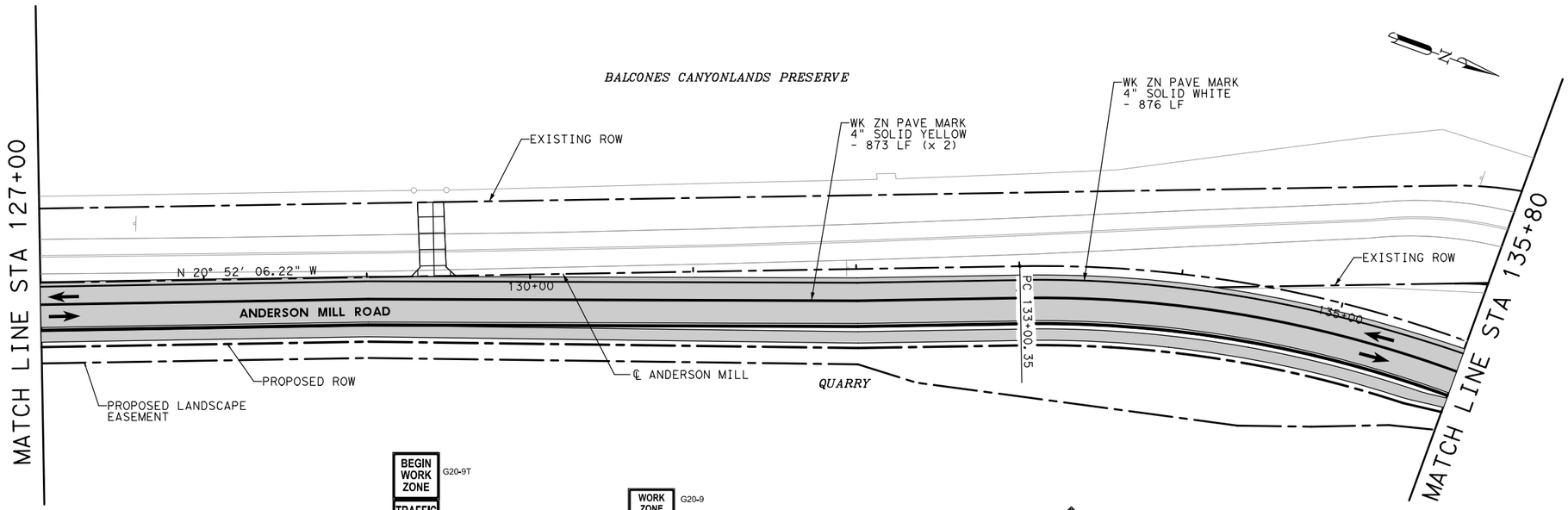

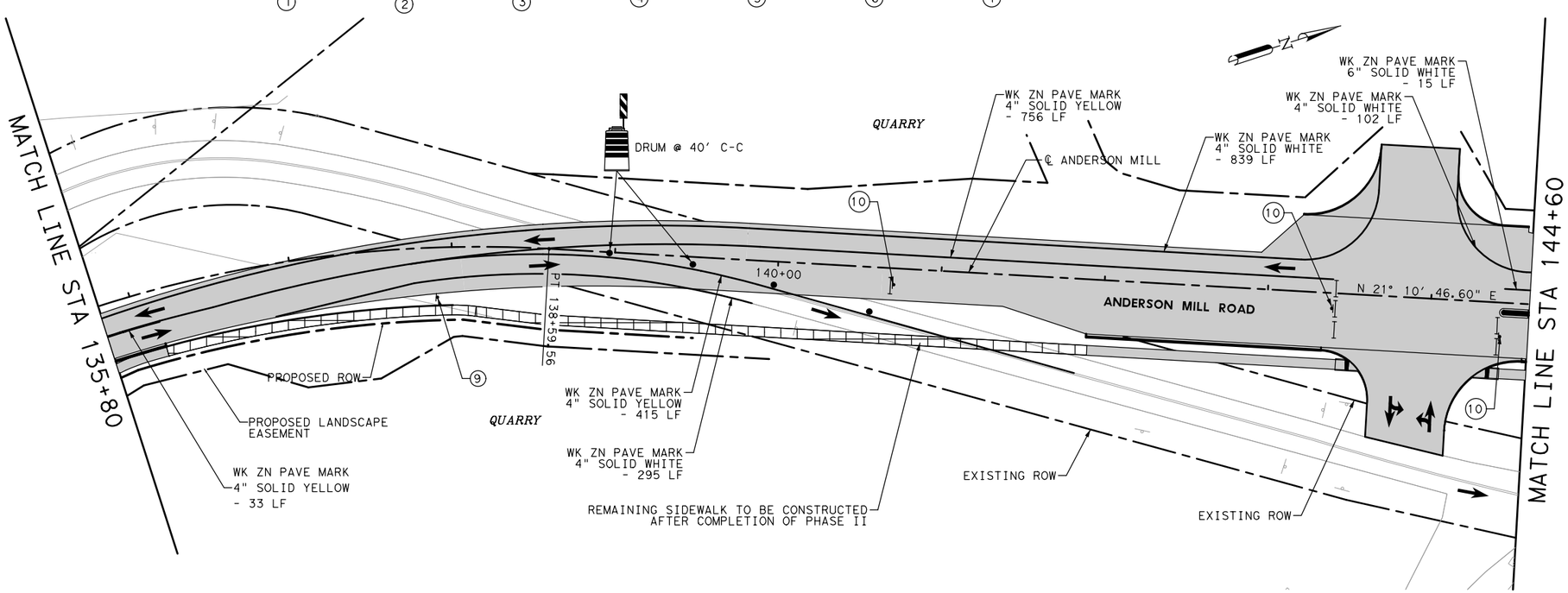

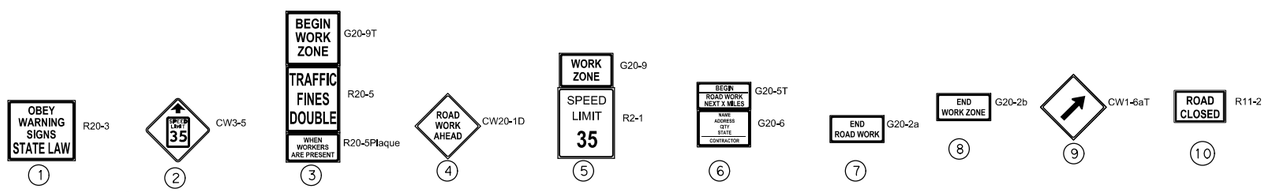

LEGEND

- TEMPORARY PAVEMENT
- PHASE 1 CONSTRUCTION
- PHASE 1A CONSTRUCTION
- PHASE 2 CONSTRUCTION
- COMPLETED CONSTRUCTION
- MESSAGE BOARD

NUMBER	DATE	REVISION	APPROVED

STATE OF TEXAS
GREGORY C. CALKINS
111309
LICENSED
PROFESSIONAL ENGINEER
10/06/2016

CEDAR PARK

Binkley & Barfield, Inc
consulting engineers
Texas Registration Number F-257

ANDERSON MILL ROAD
GASPAR BEND TO WHITESTONE BLVD
TRAFFIC CONTROL PHASE 2
STA 127+00 - STA 144+60

DESIGN BY:	GCC
DRAWN BY:	DSH
CHECKED BY:	DRE
APPROVED BY:	BDR
PROJECT NO:	156402
DATE:	10/6/2016

SCALE: 1"=80'

SHEET: 3 OF 5

PAGE: 44

10/6/2016
8:48:04 AM
...\CADD\SHEETS\TCSH1*P2S1*03.dgn

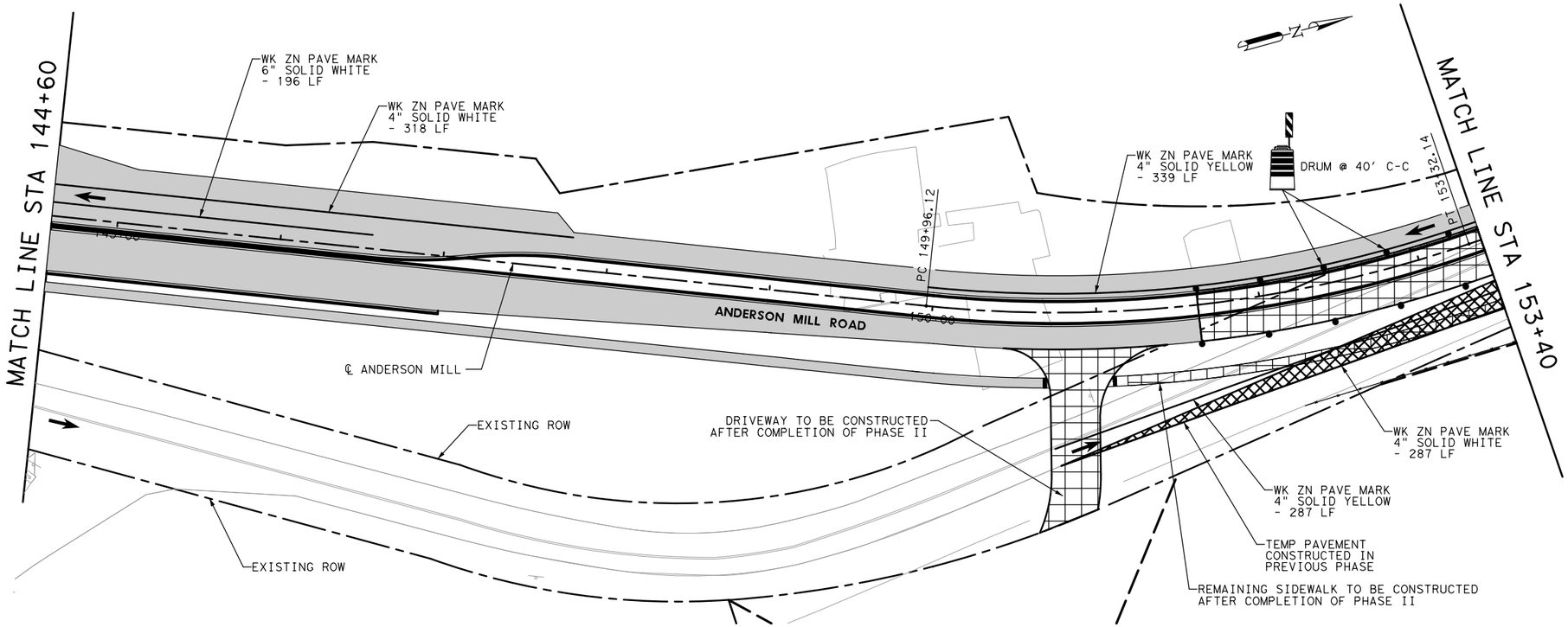

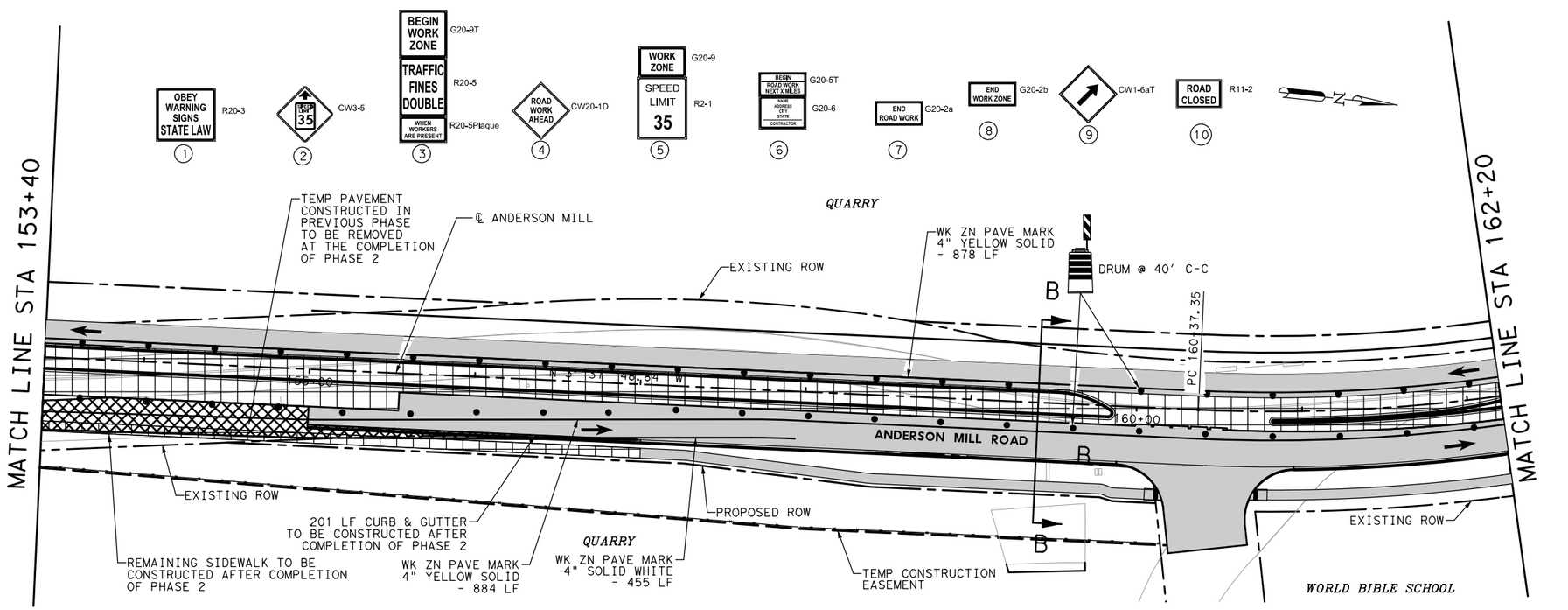

NOTE: SEE SHEET 35 FOR TYPICAL SECTION B-B.

0' 20' 40' 80'

LEGEND

- TEMPORARY PAVEMENT
- PHASE 1 CONSTRUCTION
- PHASE 1A CONSTRUCTION
- PHASE 2 CONSTRUCTION
- COMPLETED CONSTRUCTION
- MESSAGE BOARD

NOTES:

1. TEMPORARY PAVEMENT SHALL CONSIST OF 2" HMAC OVER 5" FLEX BASE AND WILL BE PAID FOR BY TXDOT ITEM 508-6001 - CONSTRUCTING DETOURS.

NUMBER	DATE	REVISION	APPROVED

STATE OF TEXAS
GREGORY C. CALKINS
111309
LICENSED
PROFESSIONAL ENGINEER
10/06/2016

CEDAR PARK

Binkley & Barfield, Inc
consulting engineers
Texas Registration Number F-257

ANDERSON MILL ROAD
GASPAR BEND TO WHITESTONE BLVD
TRAFFIC CONTROL PHASE 2
STA 144+60 - STA 162+20

DESIGN BY:	GCC	SCALE:	1"=80'
DRAWN BY:	DSH		
CHECKED BY:	DRE	SHEET:	4 OF 5
APPROVED BY:	BDR		
PROJECT NO:	156402	PAGE:	45
DATE:	10/6/2016		

10/6/2016
8:48:05 AM
...\CADD\SHEETS\TCSH1*P2S1*04.dgn

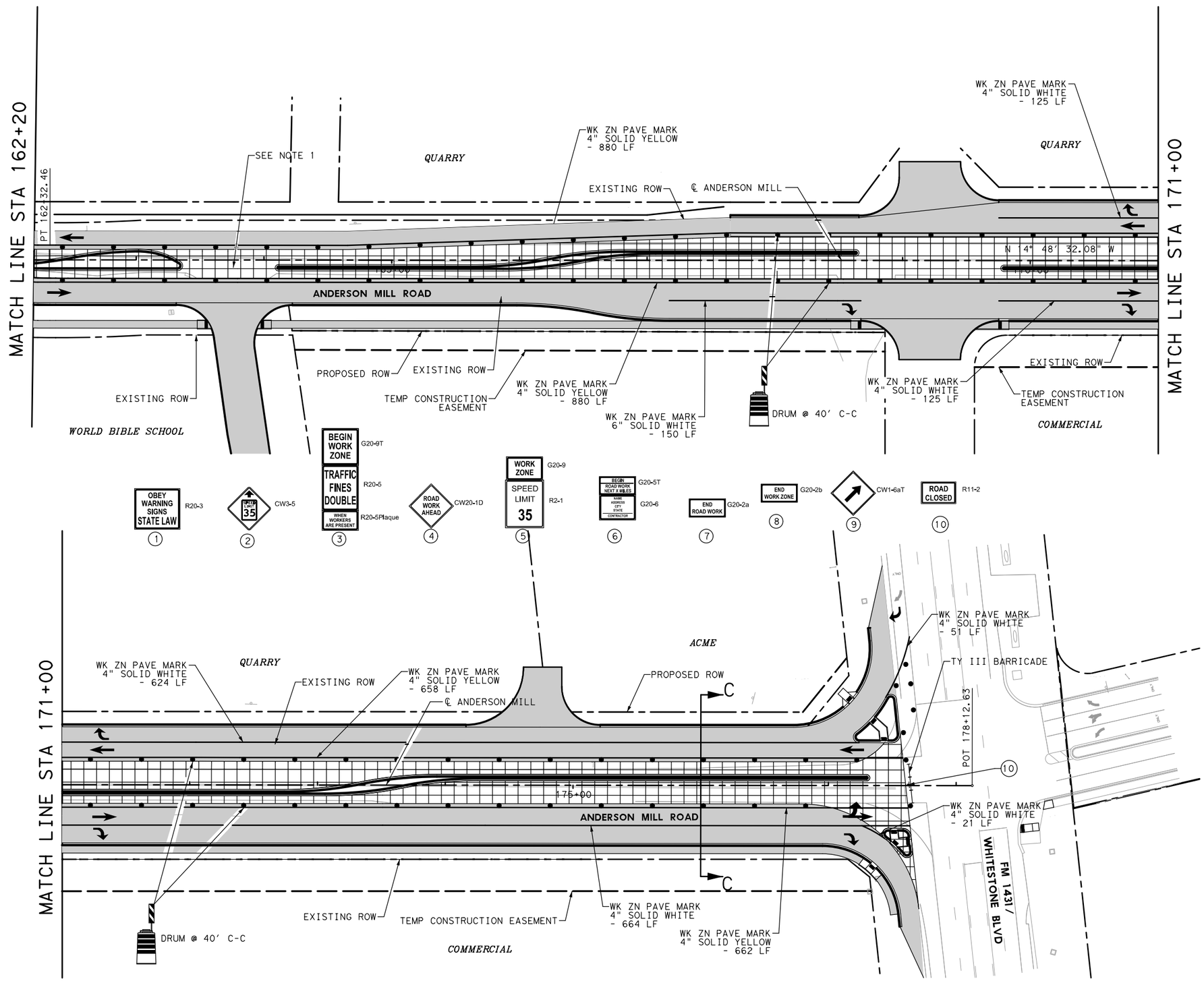

NOTE: SEE SHEET 41 FOR TYPICAL SECTION C-C.

0' 20' 40' 80'

LEGEND

- TEMPORARY PAVEMENT
- PHASE 1 CONSTRUCTION
- PHASE 1A CONSTRUCTION
- PHASE 2 CONSTRUCTION
- COMPLETED CONSTRUCTION
- MESSAGE BOARD

NOTES:

1. DRIVEWAY ACCESS TO REMAIN OPEN AT ALL TIMES. CONTRACTOR SHALL USE BLACK BASE DURING SUBGRADE PLACEMENT FOR THE CONSTRUCTION OF THE MEDIAN OPENING AT THE DRIVEWAY AS DIRECTED BY THE CITY'S REPRESENTATIVE. ITEM WILL BE SUBSIDIARY TO 340S-B.
2. TEMPORARY PAVEMENT SHALL CONSIST OF 2" HMAC OVER 5" FLEX BASE AND WILL BE PAID FOR BY TXDOT ITEM 508-6001 - CONSTRUCTING DETOURS.

NUMBER	DATE	REVISION	APPROVED

STATE OF TEXAS
GREGORY C. CALKINS
111309
LICENSED
PROFESSIONAL ENGINEER
10/06/2016

CEDAR PARK

Binkley & Barfield, Inc
consulting engineers
Texas Registration Number F-257

ANDERSON MILL ROAD
GASPAR BEND TO WHITESTONE BLVD
TRAFFIC CONTROL PHASE 2
STA 162+20 - END PROJECT

DESIGN BY:	GCC	SCALE:	1"=80'
DRAWN BY:	DSH		
CHECKED BY:	DRE		
APPROVED BY:	BDR	SHEET:	5 OF 5
PROJECT NO:	156402		
DATE:	10/6/2016	PAGE:	46

10/6/2016
8:48:07 AM
...\CADD\SHEETS\TCSH1*P2S1*05.dgn

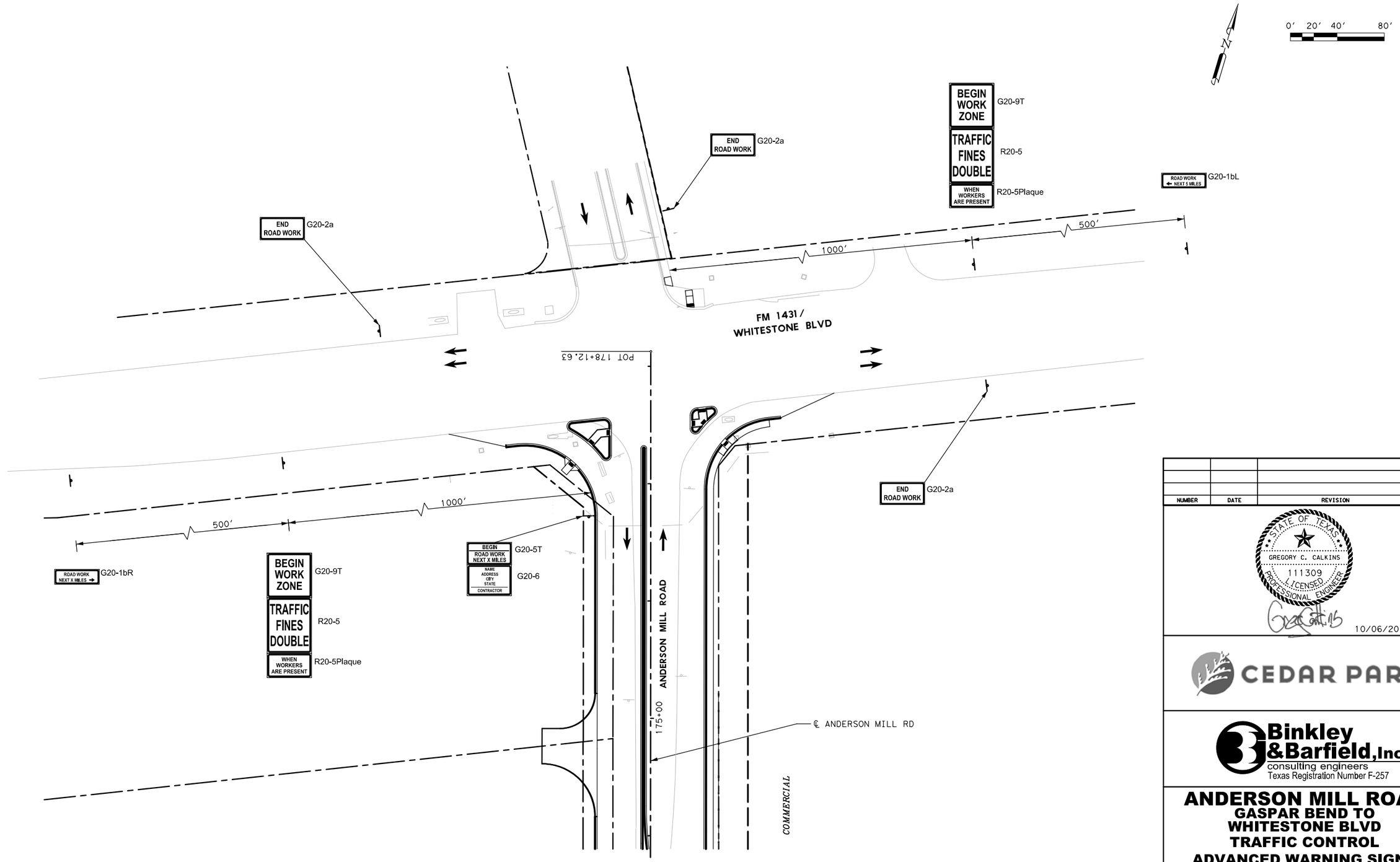

NUMBER	DATE	REVISION	APPROVED

STATE OF TEXAS
GREGORY C. CALKINS
111309
LICENSED
PROFESSIONAL ENGINEER
10/06/2016

CEDAR PARK

Binkley & Barfield, Inc
consulting engineers
Texas Registration Number F-257

ANDERSON MILL ROAD
GASPAR BEND TO WHITESTONE BLVD
TRAFFIC CONTROL
ADVANCED WARNING SIGNS
FM 1431

DESIGN BY:	GCC	SCALE: 1"=80′
DRAWN BY:	DSH	
CHECKED BY:	DRE	SHEET: 1 OF 1
APPROVED BY:	BDR	
PROJECT NO:	156402	PAGE: 47
DATE:	10/6/2016	

10/6/2016
8:48:08 AM
...\CADD\SHEETS\TCAW*01.dgn

ANDERSON MILL RD

Beginning chain AMRN description

==========

Curve Data

Curve AMRN22
P.I. Station 97+10.33 X 3,075,667.9712 Y 10,152,323.5277
Delta = 44° 04′ 54.59" (RT)
Degree = 5° 16′ 33.08"
Tangent = 439.6749
Length = 835.5392
Radius = 1,086.0000
External = 85.6271
Long Chord = 815.0834
Mid. Ord. = 79.3691
P.C. Station 92+70.65 X 3,075,790.3368 Y 10,151,901.2237
P.T. Station 101+06.19 X 3,075,873.8608 Y 10,152,712.0164
C.C. X 3,076,833.4306 Y 10,152,203.4676
Back = N 16° 09′ 33.56" W
Ahead = N 27° 55′ 21.03" E
Chord Bear = N 5° 52′ 53.74" E

Course from PT AMRN22 to PC AMRN23 N 27° 55′ 21.03" E Dist 174.1073

Curve Data

Curve AMRN23
P.I. Station 103+48.12 X 3,075,987.1520 Y 10,152,925.7830
Delta = 7° 45′ 36.86" (RT)
Degree = 5° 43′ 46.48"
Tangent = 67.8246
Length = 135.4417
Radius = 1,000.0000
External = 2.2974
Long Chord = 135.3382
Mid. Ord. = 2.2922
P.C. Station 102+80.30 X 3,075,955.3913 Y 10,152,865.8544
P.T. Station 104+15.74 X 3,076,026.7138 Y 10,152,980.8741
C.C. X 3,076,838.9730 Y 10,152,397.5775
Back = N 27° 55′ 21.03" E
Ahead = N 35° 40′ 57.89" E
Chord Bear = N 31° 48′ 09.46" E

Course from PT AMRN23 to PC AMRN24 N 35° 40′ 57.89" E Dist 66.0185

Curve Data

Curve AMRN24
P.I. Station 105+49.43 X 3,076,104.6972 Y 10,153,089.4685
Delta = 7° 44′ 35.75" (LT)
Degree = 5° 43′ 46.48"
Tangent = 67.6758
Length = 135.1454
Radius = 1,000.0000
External = 2.2874
Long Chord = 135.0426
Mid. Ord. = 2.2822
P.C. Station 104+81.76 X 3,076,065.2222 Y 10,153,034.4982
P.T. Station 106+16.90 X 3,076,136.4059 Y 10,153,149.2562
C.C. X 3,075,252.9630 Y 10,153,617.7949
Back = N 35° 40′ 57.89" E
Ahead = N 27° 56′ 22.14" E
Chord Bear = N 31° 48′ 40.02" E

Course from PT AMRN24 to PC AMRN25 N 27° 56′ 22.14" E Dist 752.9061

Curve Data

Curve AMRN25
P.I. Station 115+21.75 X 3,076,560.3618 Y 10,153,948.6368
Delta = 3° 28′ 52.16" (RT)
Degree = 1° 08′ 45.30"
Tangent = 151.9408
Length = 303.7881
Radius = 5,000.0000
External = 2.3081
Long Chord = 303.7414
Mid. Ord. = 2.3070
P.C. Station 113+69.81 X 3,076,489.1716 Y 10,153,814.4058
P.T. Station 116+73.60 X 3,076,639.5711 Y 10,154,078.2974
C.C. X 3,080,906.3864 Y 10,151,471.7121
Back = N 27° 56′ 22.14" E
Ahead = N 31° 25′ 14.30" E
Chord Bear = N 29° 40′ 48.22" E

Course from PT AMRN25 to PC AMRN26 N 31° 25′ 14.30" E Dist 96.5399

Curve Data

Curve AMRN26
P.I. Station 120+35.20 X 3,076,828.0812 Y 10,154,386.8766
Delta = 52° 17′ 20.52" (LT)
Degree = 10° 36′ 37.19"
Tangent = 265.0637
Length = 492.8125
Radius = 540.0000
External = 61.5470
Long Chord = 475.8877
Mid. Ord. = 55.2498
P.C. Station 117+70.14 X 3,076,689.8990 Y 10,154,160.6810
P.T. Station 122+62.95 X 3,076,733.6595 Y 10,154,634.5524
C.C. X 3,076,229.0829 Y 10,154,442.1922
Back = N 31° 25′ 14.30" E
Ahead = N 20° 52′ 06.22" W
Chord Bear = N 5° 16′ 34.04" E

Course from PT AMRN26 to PC AMRN27 N 20° 52′ 06.22" W Dist 1,037.3945

Curve Data

Curve AMRN27
P.I. Station 135+93.22 X 3,076,259.7890 Y 10,155,877.5537
Delta = 42° 02′ 52.82" (RT)
Degree = 7° 31′ 08.87"
Tangent = 292.8707
Length = 559.2136
Radius = 762.0000
External = 54.3438
Long Chord = 546.7487
Mid. Ord. = 50.7262
P.C. Station 133+00.35 X 3,076,364.1162 Y 10,155,603.8950
P.T. Station 138+59.56 X 3,076,365.6011 Y 10,156,150.6417
C.C. X 3,077,076.1298 Y 10,155,875.3366
Back = N 20° 52′ 06.22" W
Ahead = N 21° 10′ 46.60" E
Chord Bear = N 0° 09′ 20.19" E

Course from PT AMRN27 to PC AMRN28 N 21° 10′ 46.60" E Dist 1,136.5643

NUMBER	DATE	REVISION	APPROVED

STATE OF TEXAS
GREGORY C. CALKINS
111309
LICENSED
PROFESSIONAL ENGINEER
10/06/2016

CEDAR PARK

Binkley & Barfield, Inc
consulting engineers
Texas Registration Number F-257

ANDERSON MILL ROAD
GASPAR BEND TO WHITESTONE BLVD
HORIZONTAL ALIGNMENT DATA

DESIGN BY:	GCC	SCALE: NTS	
DRAWN BY:	DSH		
CHECKED BY:	DRE		
APPROVED BY:	BDR	SHEET: 1 OF 3	
PROJECT NO:	156402		
DATE:	10/6/2016	PAGE: 48	

10/6/2016
8:48:08 AM
...\CADD\SHEETS\ROAD1*AM*01.dgn

AMRN CON'T

Curve Data

Curve AMRN28

P.I.	Station	151+66.81	X	3,076,837.9006	Y	10,157,369.5891
Delta	=	24° 48′ 35.44" (LT)				
Degree	=	7° 23′ 00.52"				
Tangent	=	170.6846				
Length	=	336.0185				
Radius	=	776.0000				
External	=	18.5497				
Long Chord	=	333.3994				
Mid. Ord.	=	18.1166				
P.C.	Station	149+96.12	X	3,076,776.2335	Y	10,157,210.4338
P.T.	Station	153+32.14	X	3,076,827.0934	Y	10,157,539.9311
C.C.			X	3,076,052.6505	Y	10,157,490.7970
Back	= N	21° 10′ 46.60" E				
Ahead	= N	3° 37′ 48.84" W				
Chord Bear	= N	8° 46′ 28.88" E				

Course from PT AMRN28 to PC AMRN29 N 3° 37′ 48.84" W Dist 705.2083

Curve Data

Curve AMRN29

P.I.	Station	161+35.21	X	3,076,776.2452	Y	10,158,341.3911
Delta	=	11° 10′ 43.24" (LT)				
Degree	=	5° 43′ 46.48"				
Tangent	=	97.8630				
Length	=	195.1047				
Radius	=	1,000.0000				
External	=	4.7772				
Long Chord	=	194.7954				
Mid. Ord.	=	4.7545				
P.C.	Station	160+37.35	X	3,076,782.4416	Y	10,158,243.7244
P.T.	Station	162+32.46	X	3,076,751.2318	Y	10,158,436.0034
C.C.			X	3,075,784.4481	Y	10,158,180.4073
Back	= N	3° 37′ 48.84" W				
Ahead	= N	14° 48′ 32.08" W				
Chord Bear	= N	9° 13′ 10.46" W				

Course from PT AMRN29 to AMRN30 N 14° 48′ 32.08" W Dist 1,580.1772

Point AMRN30 X 3,076,347.3447 Y 10,159,963.6929 Sta 178+12.63

==========

Ending chain AMRN description

GASPAR BEND

Beginning chain DW1 description

==========

Point DW101 X 3,076,494.2120 Y 10,153,823.8850 Sta 10+00.00

Course from DW101 to DW102 S 61° 56′ 14.96" E Dist 149.1767

Point DW102 X 3,076,625.8508 Y 10,153,753.7071 Sta 11+49.18

==========

Ending chain DW1 description

DRIVEWAY 1

Beginning chain DW3 description

==========

Point DW301 X 3,076,556.6508 Y 10,156,643.7177 Sta 10+00.00

Course from DW301 to DW302 N 68° 49′ 13.40" W Dist 142.5000

Point DW302 X 3,076,423.7763 Y 10,156,695.2019 Sta 11+42.50

==========

Ending chain DW3 description

DRIVEWAY 2

Beginning chain DW2 description

==========

Point DW201 X 3,076,556.6508 Y 10,156,643.7177 Sta 10+00.00

Course from DW201 to DW202 S 68° 49′ 13.40" E Dist 105.5000

Point DW202 X 3,076,655.0245 Y 10,156,605.6013 Sta 11+05.50

==========

Ending chain DW2 description

DRIVEWAY 3

Beginning chain DW4 description

==========

Point DW401 X 3,076,782.4416 Y 10,158,243.7244 Sta 10+00.00

Course from DW401 to PC DW4-1 N 86° 22′ 11.17" E Dist 3.3750

Curve Data

Curve DW4-1

P.I.	Station	10+22.13	X	3,076,804.5273	Y	10,158,245.1256
Delta	=	8° 34′ 50.23" (LT)				
Degree	=	22° 55′ 05.92"				
Tangent	=	18.7551				
Length	=	37.4400				
Radius	=	250.0000				
External	=	0.7025				
Long Chord	=	37.4050				
Mid. Ord.	=	0.7005				
P.C.	Station	10+03.38	X	3,076,785.8098	Y	10,158,243.9381
P.T.	Station	10+40.82	X	3,076,822.8580	Y	10,158,249.0925
C.C.			X	3,076,769.9806	Y	10,158,493.4365
Back	= N	86° 22′ 11.17" E				
Ahead	= N	77° 47′ 20.94" E				
Chord Bear	= N	82° 04′ 46.05" E				

Course from PT DW4-1 to DW403 N 77° 47′ 20.94" E Dist 93.5437

Point DW403 X 3,076,914.2854 Y 10,158,268.8780 Sta 11+34.36

==========

Ending chain DW4 description

DRIVEWAY 4

Beginning chain DW5 description

==========

Point DW501 X 3,076,714.3390 Y 10,158,575.5491 Sta 10+00.00

Course from DW501 to PC DW5-1 N 75° 11′ 27.92" E Dist 51.5426

Curve Data

Curve DW5-1

P.I.	Station	10+65.00	X	3,076,777.1799	Y	10,158,592.1628
Delta	=	7° 41′ 56.18" (LT)				
Degree	=	28° 38′ 52.40"				
Tangent	=	13.4574				
Length	=	26.8744				
Radius	=	200.0000				
External	=	0.4522				
Long Chord	=	26.8541				
Mid. Ord.	=	0.4512				
P.C.	Station	10+51.54	X	3,076,764.1695	Y	10,158,588.7232
P.T.	Station	10+78.42	X	3,076,789.6123	Y	10,158,597.3145
C.C.			X	3,076,713.0503	Y	10,158,782.0799
Back	= N	75° 11′ 27.92" E				
Ahead	= N	67° 29′ 31.75" E				
Chord Bear	= N	71° 20′ 29.84" E				

Course from PT DW5-1 to DW503 N 67° 29′ 31.74" E Dist 105.2397

Point DW503 X 3,076,886.8355 Y 10,158,637.6013 Sta 11+83.66

==========

Ending chain DW5 description

NUMBER	DATE	REVISION	APPROVED

STATE OF TEXAS
GREGORY C. CALKINS
111309
LICENSED
PROFESSIONAL ENGINEER

10/06/2016

CEDAR PARK

Binkley & Barfield, Inc
consulting engineers
Texas Registration Number F-257

ANDERSON MILL ROAD
GASPAR BEND TO WHITESTONE BLVD
HORIZONTAL ALIGNMENT DATA

DESIGN BY:	GCC	SCALE: NTS	
DRAWN BY:	DSH		
CHECKED BY:	DRE		
APPROVED BY:	BDR	SHEET: 2 OF 3	
PROJECT NO:	156402		
DATE:	10/6/2016	PAGE: 49	

10/6/2016
8:48:09 AM
...\CADD\SHEETS\RDAD1*AM*02.dgn

DRIVEWAY 5

Beginning chain DW7 description

==========

Point DW701 X 3,076,575.1670 Y 10,159,101.9625 Sta 10+00.00

Course from DW701 to DW702 S 75° 11′ 27.92" W Dist 127.4337

Point DW702 X 3,076,451.9662 Y 10,159,069.3909 Sta 11+27.43

==========

Ending chain DW7 description

DRIVEWAY 6

Beginning chain DW6 description

==========

Point DW601 X 3,076,575.1496 Y 10,159,102.0282 Sta 10+00.00

Course from DW601 to DW602 N 75° 11′ 27.92" E Dist 102.5477

Point DW602 X 3,076,674.2911 Y 10,159,128.2390 Sta 11+02.55

==========

Ending chain DW6 description

CORE SLAB DRIVEWAY

Beginning chain DWCR description

==========

Point DWCR01 X 3,076,803.9054 Y 10,157,296.3955 Sta 10+00.00

Course from DWCR01 to PC DWCR-1 S 75° 29′ 30.71" E Dist 98.8466

Curve Data

Curve DWCR-1

P.I. Station		11+25.52	X	3,076,925.4209	Y 10,157,264.9510
Delta	=	29° 52′ 04.62" (RT)			
Degree	=	57° 17′ 44.81"			
Tangent	=	26.6714			
Length	=	52.1294			
Radius	=	100.0000			
External	=	3.4957			
Long Chord	=	51.5412			
Mid. Ord.	=	3.3777			
P.C. Station		10+98.85	X	3,076,899.6000	Y 10,157,271.6327
P.T. Station		11+50.98	X	3,076,944.4847	Y 10,157,246.2979
C.C.			X	3,076,874.5482	Y 10,157,174.8215
Back	= S 75° 29′ 30.71" E				
Ahead	= S 45° 37′ 26.09" E				
Chord Bear	= S 60° 33′ 28.40" E				

Course from PT DWCR-1 to PC DWCR-2 S 45° 37′ 26.09" E Dist 39.4123

CORE SLAB DRIVEWAY

Curve Data

Curve DWCR-2

P.I. Station		12+18.29	X	3,076,992.5997	Y 10,157,199.2196
Delta	=	31° 10′ 54.91" (LT)			
Degree	=	57° 17′ 44.81"			
Tangent	=	27.9035			
Length	=	54.4227			
Radius	=	100.0000			
External	=	3.8201			
Long Chord	=	53.7536			
Mid. Ord.	=	3.6795			
P.C. Station		11+90.39	X	3,076,972.6552	Y 10,157,218.7344
P.T. Station		12+44.81	X	3,077,019.7666	Y 10,157,192.8506
C.C.			X	3,077,042.5918	Y 10,157,290.2108
Back	= S 45° 37′ 26.09" E				
Ahead	= S 76° 48′ 21.00" E				
Chord Bear	= S 61° 12′ 53.55" E				

==========

Ending chain DWCR description

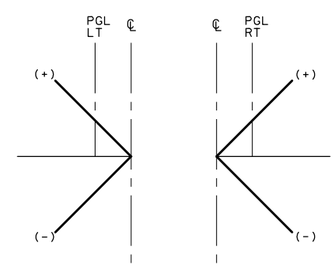

CROSS SLOPE SIGN CONVENTION

PGL LT		PGL RT	
STATION	CROSS SLOPE	STATION	CROSS SLOPE
104+53.23	-1.50%	104+53.23	-1.50%
104+78.00	-2.00%	104+78.00	-2.00%
116+93.00	-2.00%	114+41.00	-2.00%
117+70.14	-3.63%	117+97.00	3.80%
		122+36.00	3.80%
137+50.79	-2.00%	125+11.00	-2.00%
173+36.00	-2.00%	140+82.00	-2.00%
177+75.18	3.60%	143+20.00	2.00%
		164+10.00	2.00%
		167+24.00	-2.00%
		176+51.00	-2.00%
		177+77.00	-3.60%

SUPERELEVATION TRANSITION SUMMARY

DRIVEWAY 7

Beginning chain DWY7 description

==========

Point DWY701 X 3,076,433.3283 Y 10,159,638.4628 Sta 10+00.00

Course from DWY701 to DWY702 S 75° 11′ 27.92" W Dist 142.5000

Point DWY702 X 3,076,295.5616 Y 10,159,602.0403 Sta 11+42.50

==========

Ending chain DWY7 description

NUMBER	DATE	REVISION	APPROVED

STATE OF TEXAS
GREGORY C. CALKINS
111309
LICENSED
PROFESSIONAL ENGINEER

10/06/2016

CEDAR PARK

Binkley & Barfield, Inc
consulting engineers
Texas Registration Number F-257

ANDERSON MILL ROAD
GASPAR BEND TO WHITESTONE BLVD
HORIZONTAL ALIGNMENT DATA

DESIGN BY:	GCC	SCALE: NTS
DRAWN BY:	DSH	
CHECKED BY:	DRE	
APPROVED BY:	BDR	SHEET: 3 OF 3
PROJECT NO:	156402	
DATE:	10/6/2016	PAGE: 50

10/6/2016
8:48:10 AM
...\CADD\SHEETS\RDAD1*AM*03.dgn

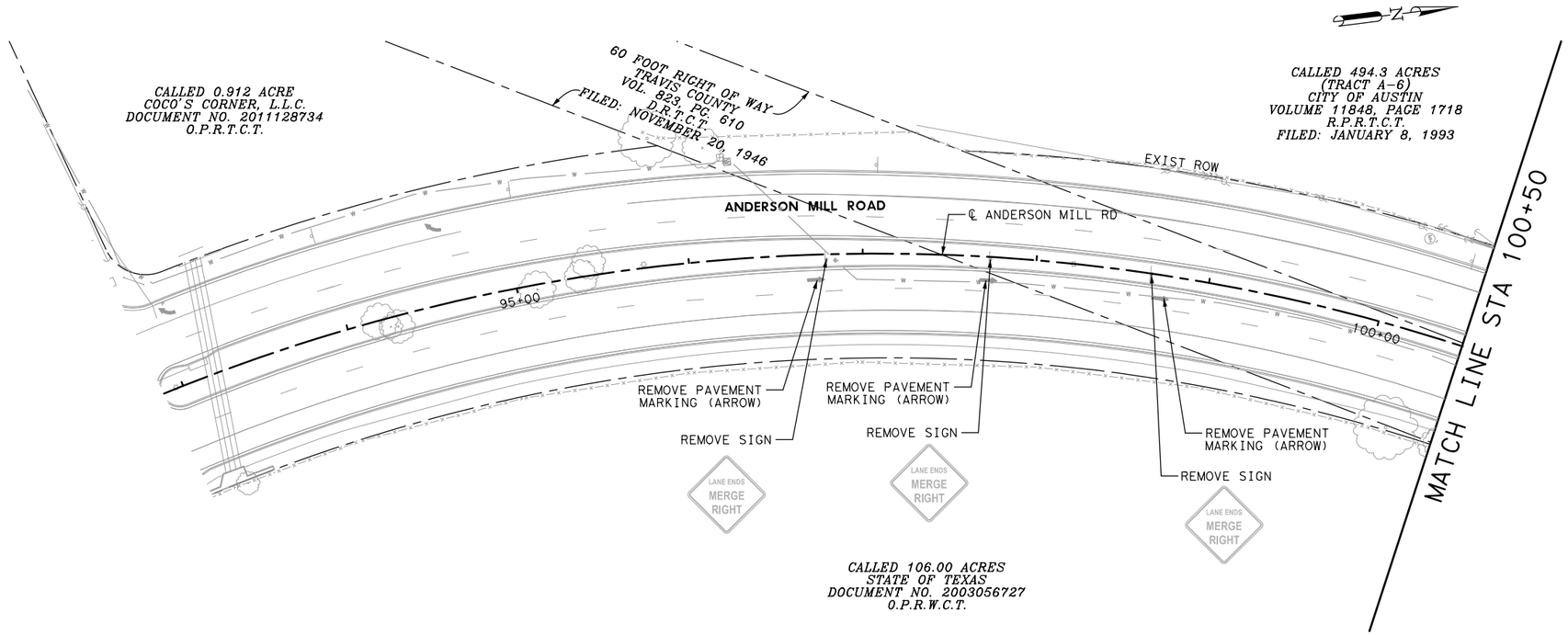

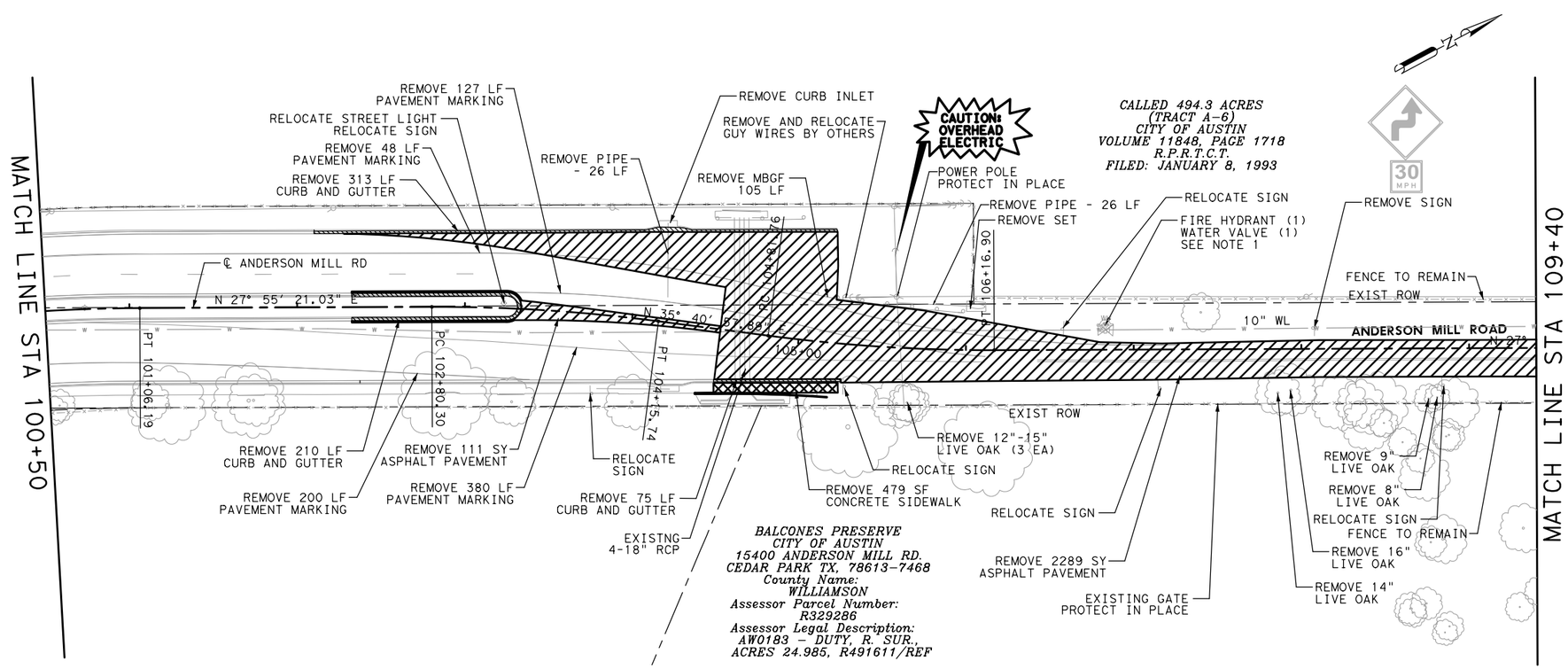

0' 20' 40' 80'

LEGEND

- ASHPALT PAVEMENT REMOVAL
- CONCRETE SIDEWALK AND PEDESTRIAN RAMP REMOVAL
- CONCRETE CURB & GUTTER REMOVAL
- CONCRETE RIPRAP REMOVAL

NOTES:

1. SEE WATER LINE SHEETS FOR ALL WATER LINE, METER AND VAULT ADJUSTMENTS AND RELOCATIONS.
2. SEE SIGNING AND STRIPING PLANS FOR EXISTING SIGN RELOCATIONS.
3. SIGNS TO BE REMOVED AND SALVAGED ARE THE PROPERTY OF THE CITY.
4. ALL TREE AND BRUSH REMOVAL IS SUBSIDIARY TO ITEM 101S, SHEET TOTALS ARE APPROXIMATE, AND FOR CONTRACTORS INFORMATION ONLY.
5. SEE TRAFFIC CONTROL PLANS FOR PHASED REMOVALS.

NUMBER	DATE	REVISION	APPROVED

STATE OF TEXAS
GREGORY C. CALKINS
111309
LICENSED
PROFESSIONAL ENGINEER
10/06/2016

CEDAR PARK

Binkley & Barfield, Inc
consulting engineers
Texas Registration Number F-257

ANDERSON MILL ROAD
GASPAR BEND TO WHITESTONE BLVD
EXISTING CONDITIONS AND REMOVAL PLANS
BEGIN PROJECT - STA 109+40

DESIGN BY:	GCC	SCALE:	1"=80'
DRAWN BY:	DSH		
CHECKED BY:	DRE		
APPROVED BY:	BDR	SHEET:	1 OF 5
PROJECT NO:	156402		
DATE:	10/6/2016	PAGE:	51

10/6/2016
11:01:24 AM
...\CADD\SHEETS\RDDM1*AM*01.dgn

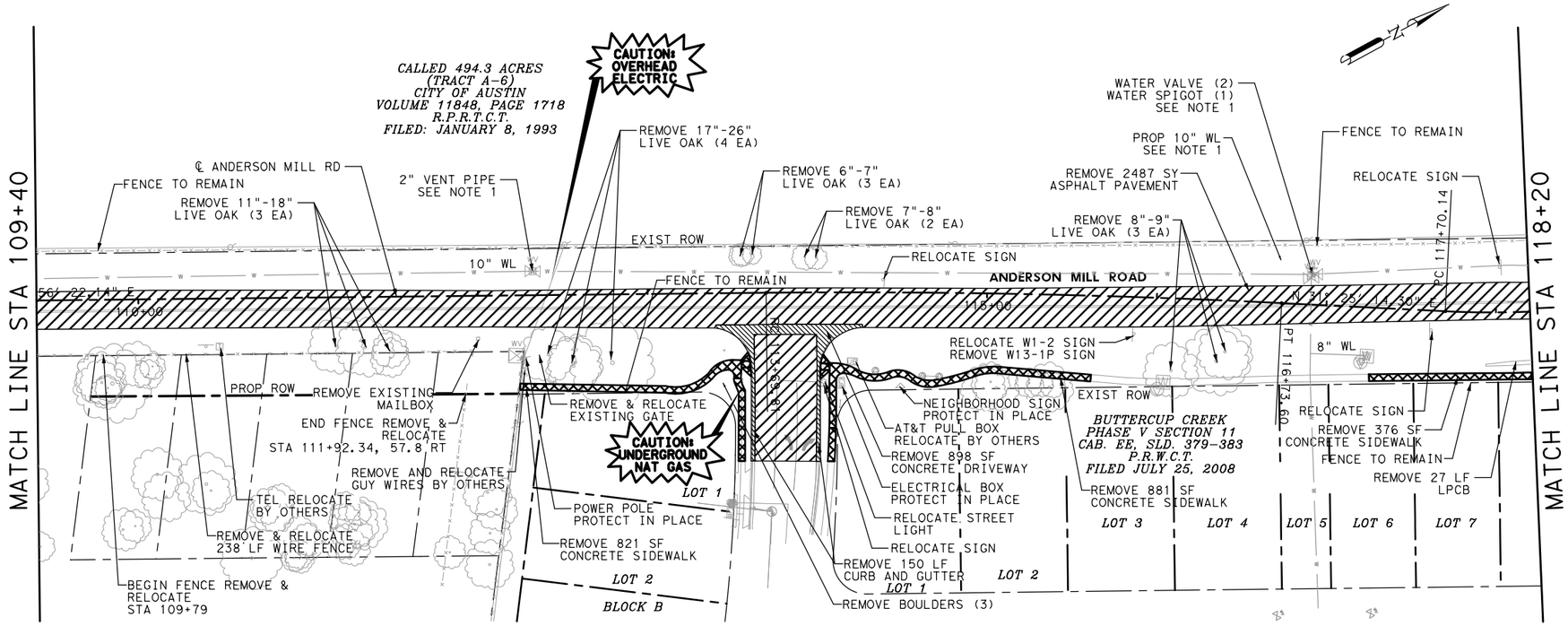

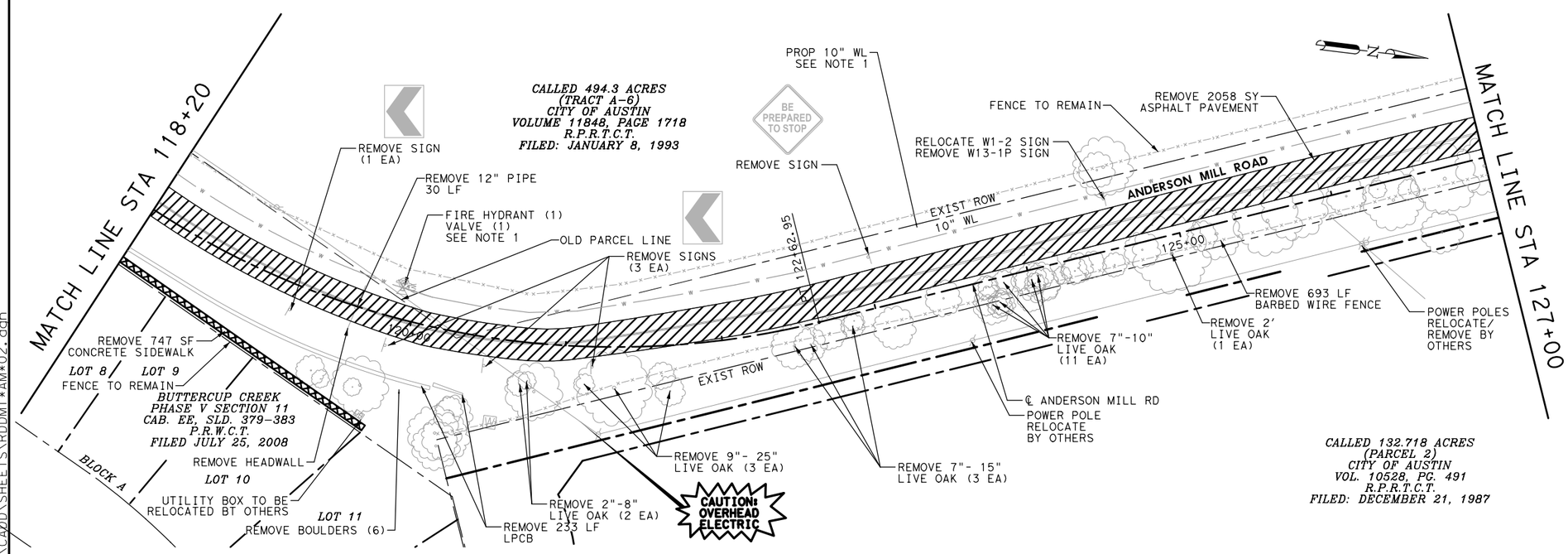

0' 20' 40' 80'

LEGEND

- ASHPALT PAVEMENT REMOVAL
- CONCRETE SIDEWALK AND PEDESTRIAN RAMP REMOVAL
- CONCRETE CURB & GUTTER REMOVAL
- CONCRETE RIPRAP REMOVAL

NOTES:

1. SEE WATER LINE SHEETS FOR ALL WATER LINE, METER AND VAULT ADJUSTMENTS AND RELOCATIONS.
2. SEE SIGNING AND STRIPING PLANS FOR EXISTING SIGN RELOCATIONS.
3. SIGNS TO BE REMOVED AND SALVAGED ARE THE PROPERTY OF THE CITY.
4. ALL TREE AND BRUSH REMOVAL IS SUBSIDIARY TO ITEM 101S, SHEET TOTALS ARE APPROXIMATE, AND FOR CONTRACTORS INFORMATION ONLY.
5. SEE TRAFFIC CONTROL PLANS FOR PHASED REMOVALS.

NUMBER	DATE	REVISION	APPROVED

STATE OF TEXAS
GREGORY C. CALKINS
111309
LICENSED
PROFESSIONAL ENGINEER
10/06/2016

CEDAR PARK

Binkley & Barfield, Inc
consulting engineers
Texas Registration Number F-257

ANDERSON MILL ROAD
GASPAR BEND TO WHITESTONE BLVD
EXISTING CONDITIONS AND REMOVAL PLANS
STA 109+40 - STA 127+00

DESIGN BY:	GCC	SCALE:	1"=80'
DRAWN BY:	DSH		
CHECKED BY:	DRE		
APPROVED BY:	BDR	SHEET:	2 OF 5
PROJECT NO:	156402		
DATE:	10/6/2016	PAGE:	52

10/6/2016
11:01:25 AM
...\CADD\SHEETS\RDDM1*AM*02.dgn

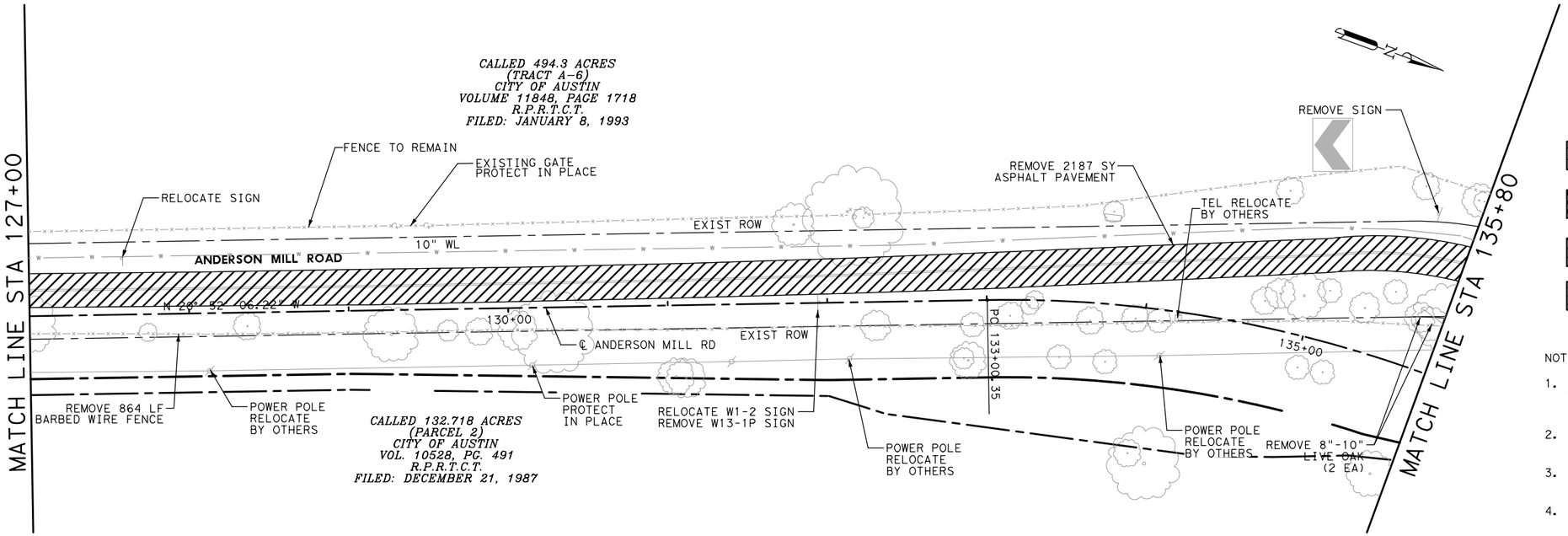

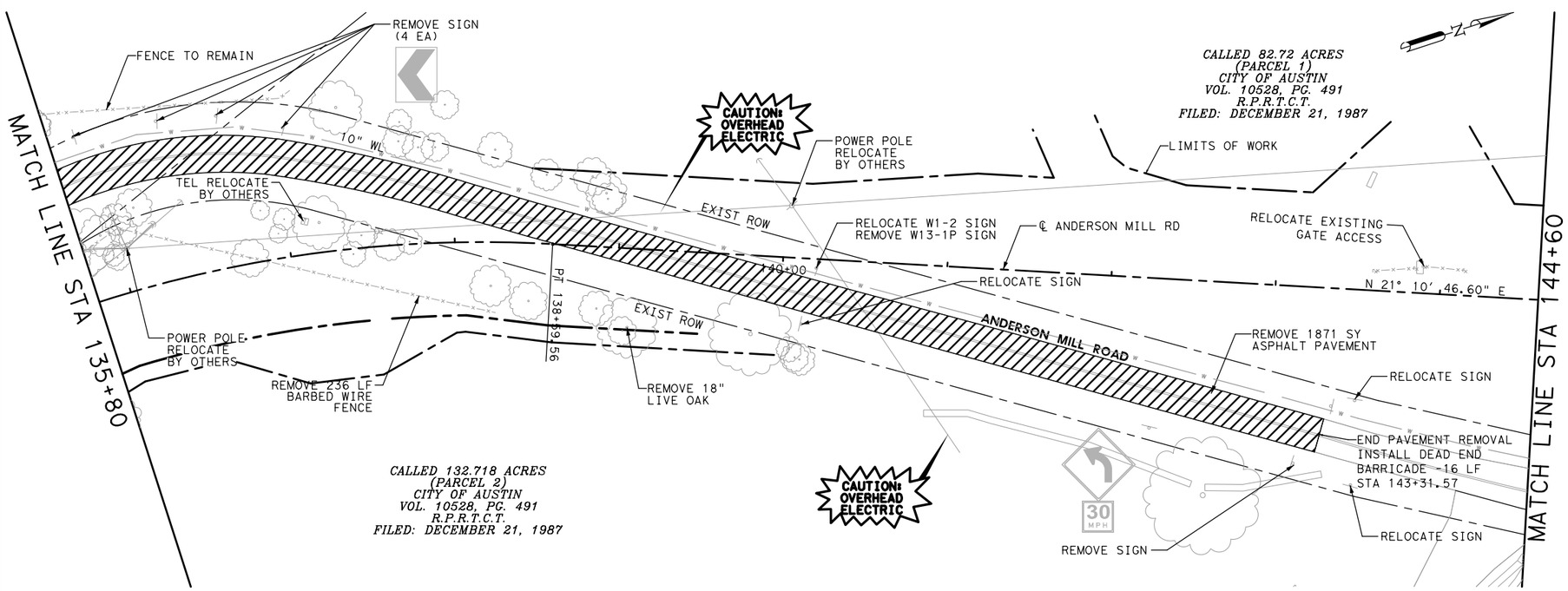

0' 20' 40' 80'

LEGEND

- ASHPALT PAVEMENT REMOVAL
- CONCRETE SIDEWALK AND PEDESTRIAN RAMP REMOVAL
- CONCRETE CURB & GUTTER REMOVAL
- CONCRETE RIPRAP REMOVAL

NOTES:

1. SEE WATER LINE SHEETS FOR ALL WATER LINE, METER AND VAULT ADJUSTMENTS AND RELOCATIONS.
2. SEE SIGNING AND STRIPING PLANS FOR EXISTING SIGN RELOCATIONS.
3. SIGNS TO BE REMOVED AND SALVAGED ARE THE PROPERTY OF THE CITY.
4. ALL TREE AND BRUSH REMOVAL IS SUBSIDIARY TO ITEM 101S, SHEET TOTALS ARE APPROXIMATE, AND FOR CONTRACTORS INFORMATION ONLY.
5. SEE TRAFFIC CONTROL PLANS FOR PHASED REMOVALS.

NUMBER	DATE	REVISION	APPROVED

STATE OF TEXAS
GREGORY C. CALKINS
111309
LICENSED
PROFESSIONAL ENGINEER
10/06/2016

CEDAR PARK

Binkley & Barfield, Inc
consulting engineers
Texas Registration Number F-257

ANDERSON MILL ROAD
GASPAR BEND TO WHITESTONE BLVD
EXISTING CONDITIONS AND REMOVAL PLANS
STA 127+00 - STA 144+60

DESIGN BY:	GCC	SCALE:	1"=80'
DRAWN BY:	DSH		
CHECKED BY:	DRE		
APPROVED BY:	BDR	SHEET:	3 OF 5
PROJECT NO:	156402		
DATE:	10/6/2016	PAGE:	53

10/6/2016
11:01:27 AM
...\CADD\SHEETS\RDDM1*AM*03.dgn

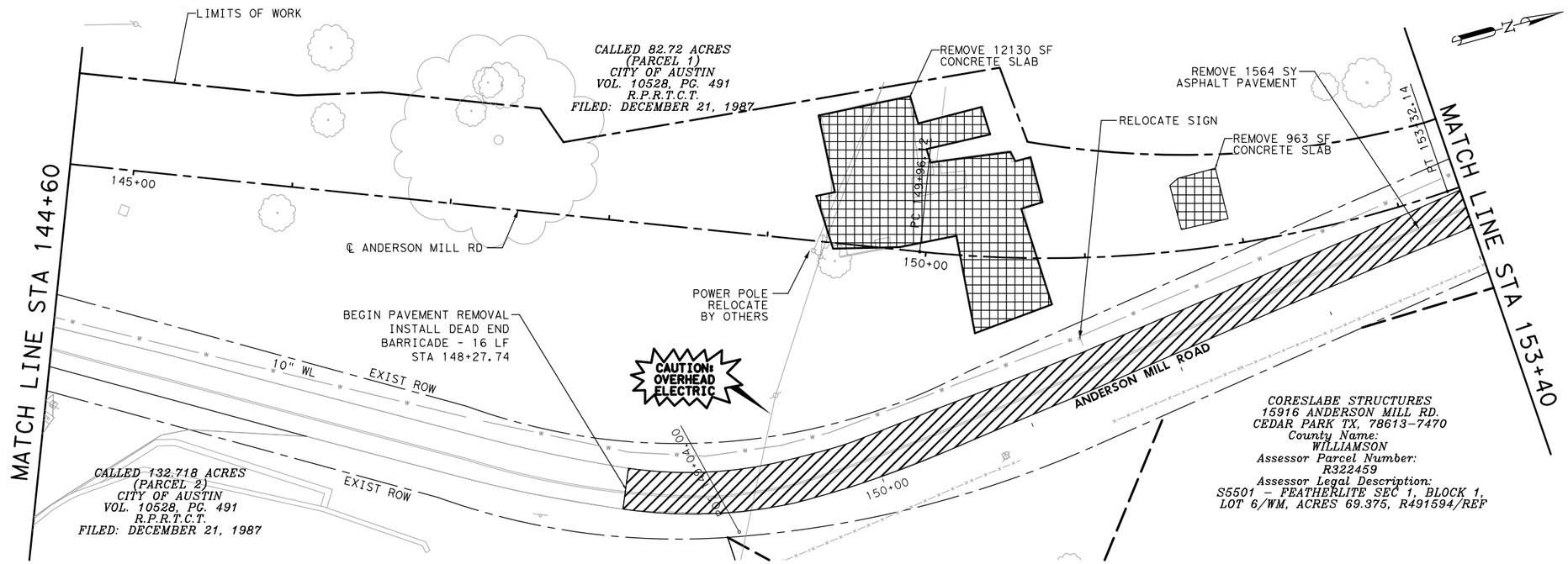

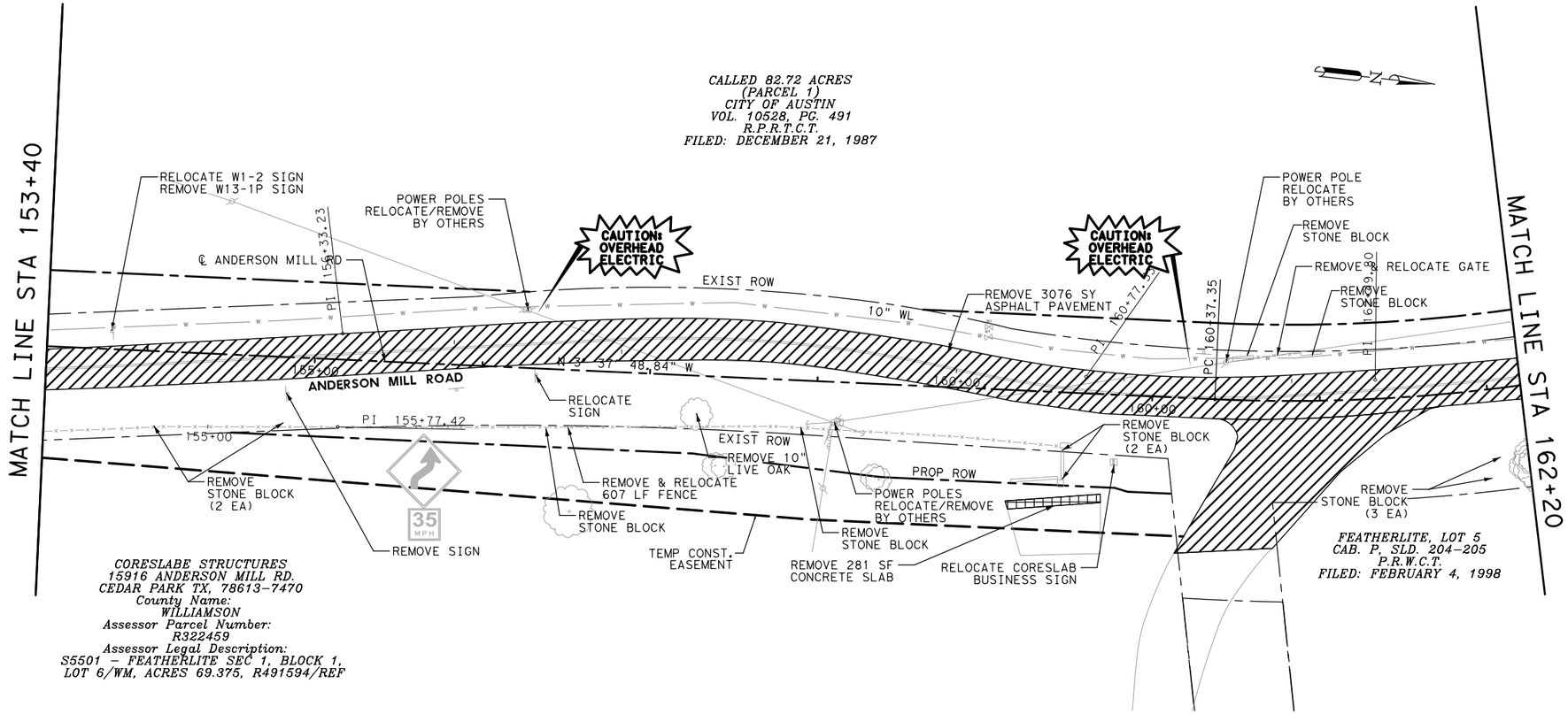

0' 20' 40' 80'

LEGEND

- ASHPALT PAVEMENT REMOVAL
- CONCRETE SIDEWALK AND PEDESTRIAN RAMP REMOVAL
- CONCRETE CURB & GUTTER REMOVAL
- CONCRETE RIPRAP REMOVAL

NOTES:

1. SEE WATER LINE SHEETS FOR ALL WATER LINE, METER AND VAULT ADJUSTMENTS AND RELOCATIONS.
2. SEE SIGNING AND STRIPING PLANS FOR EXISTING SIGN RELOCATIONS.
3. SIGNS TO BE REMOVED AND SALVAGED ARE THE PROPERTY OF THE CITY.
4. ALL TREE AND BRUSH REMOVAL IS SUBSIDIARY TO ITEM 101S, SHEET TOTALS ARE APPROXIMATE, AND FOR CONTRACTORS INFORMATION ONLY.
5. SEE TRAFFIC CONTROL PLANS FOR PHASED REMOVALS.

NUMBER	DATE	REVISION	APPROVED

STATE OF TEXAS
GREGORY C. CALKINS
111309
LICENSED
PROFESSIONAL ENGINEER
10/06/2016

CEDAR PARK

Binkley & Barfield, Inc
consulting engineers
Texas Registration Number F-257

ANDERSON MILL ROAD
GASPAR BEND TO WHITESTONE BLVD
EXISTING CONDITIONS AND REMOVAL PLANS
STA 144+60 - STA 162+20

DESIGN BY:	GCC	SCALE:	1"=80'
DRAWN BY:	DSH		
CHECKED BY:	DRE		
APPROVED BY:	BDR	SHEET:	4 OF 5
PROJECT NO:	156402		
DATE:	10/6/2016	PAGE:	54

10/6/2016
11:01:28 AM
...\CADD\SHEETS\RDDM1*AM*04.dgn

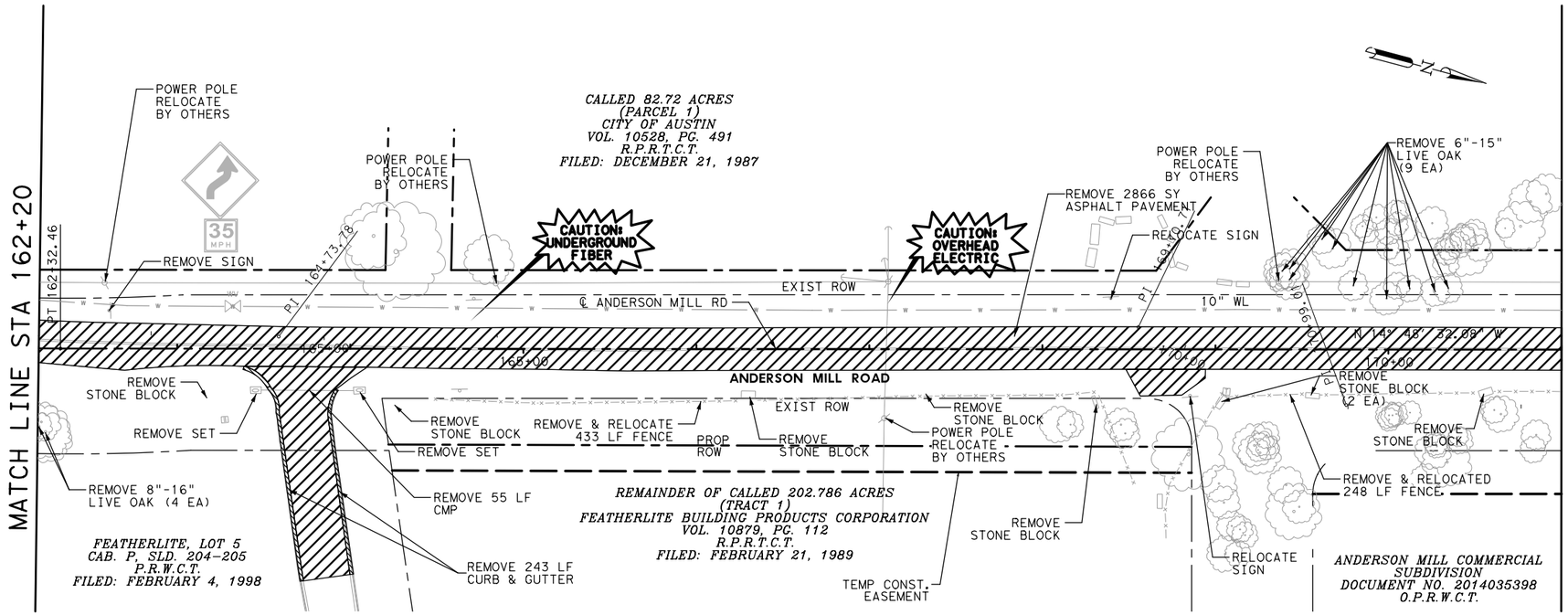

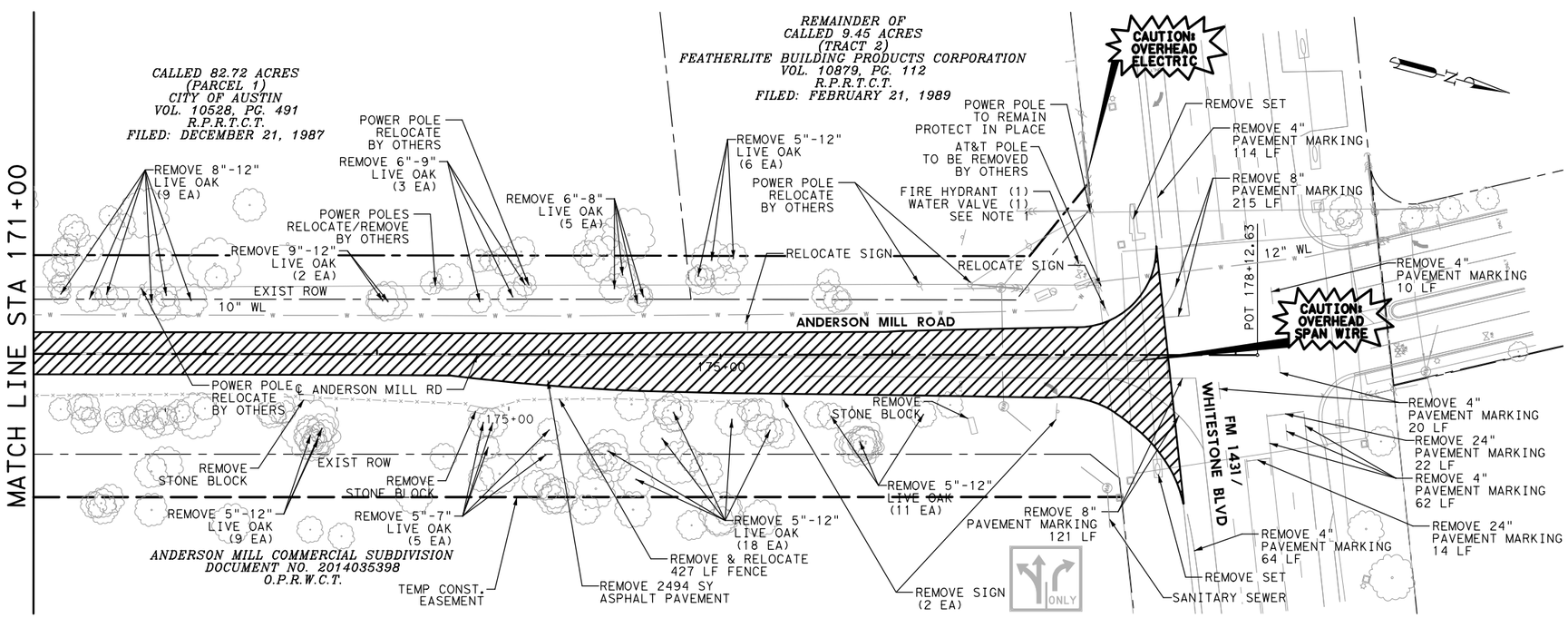

0' 20' 40' 80'

LEGEND

- ASHPALT PAVEMENT REMOVAL
- CONCRETE SIDEWALK AND PEDESTRIAN RAMP REMOVAL
- CONCRETE CURB & GUTTER REMOVAL
- CONCRETE RIPRAP REMOVAL

NOTES:

1. SEE WATER LINE SHEETS FOR ALL WATER LINE, METER AND VAULT ADJUSTMENTS AND RELOCATIONS.
2. SEE SIGNING AND STRIPING PLANS FOR EXISTING SIGN RELOCATIONS.
3. SIGNS TO BE REMOVED AND SALVAGED ARE THE PROPERTY OF THE CITY.
4. ALL TREE AND BRUSH REMOVAL IS SUBSIDIARY TO ITEM 101S, SHEET TOTALS ARE APPROXIMATE, AND FOR CONTRACTORS INFORMATION ONLY.
5. SEE TRAFFIC CONTROL PLANS FOR PHASED REMOVALS.

NUMBER	DATE	REVISION	APPROVED

STATE OF TEXAS
GREGORY C. CALKINS
111309
LICENSED
PROFESSIONAL ENGINEER
10/06/2016

CEDAR PARK

Binkley & Barfield, Inc
consulting engineers
Texas Registration Number F-257

ANDERSON MILL ROAD
GASPAR BEND TO WHITESTONE BLVD
EXISTING CONDITIONS AND REMOVAL PLANS
STA 162+20 - END PROJECT

DESIGN BY:	GCC	SCALE: 1"=80'
DRAWN BY:	DSH	
CHECKED BY:	DRE	
APPROVED BY:	BDR	SHEET: 5 OF 5
PROJECT NO:	156402	
DATE:	10/6/2016	PAGE: 55

10/6/2016
11:01:29 AM
...\CADD\SHEETS\RDDM1*AM*05.dgn

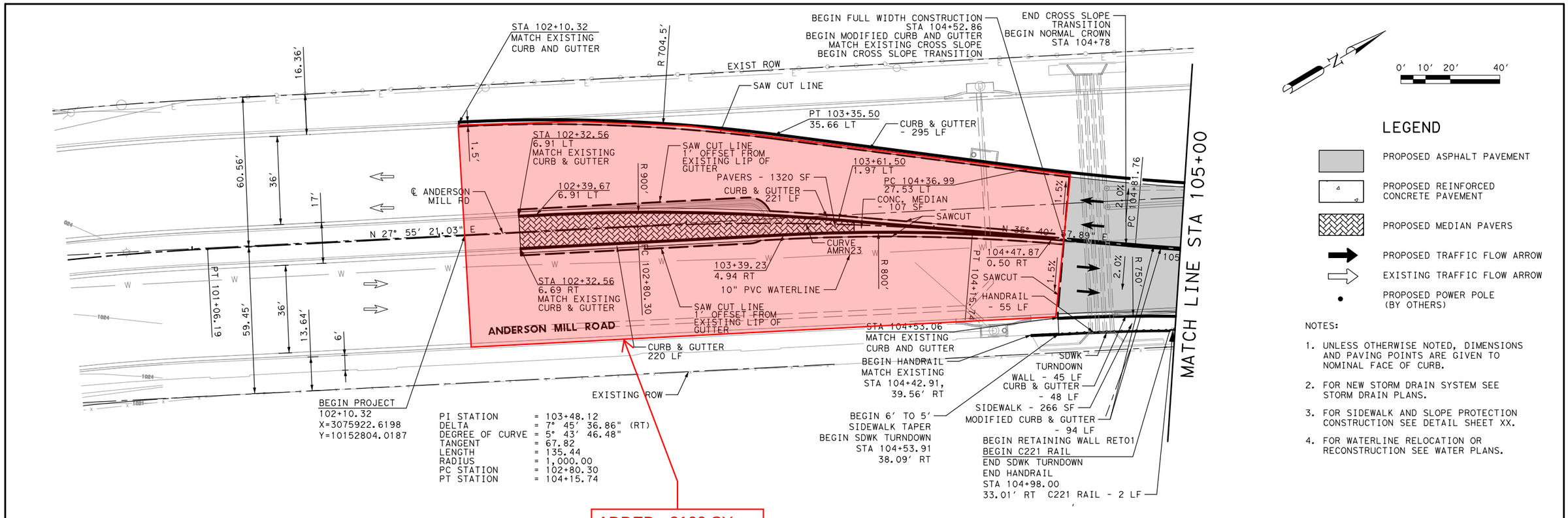

ADDED ~2100 SY
OF MILL & TYPE 'D'
OVERLAY

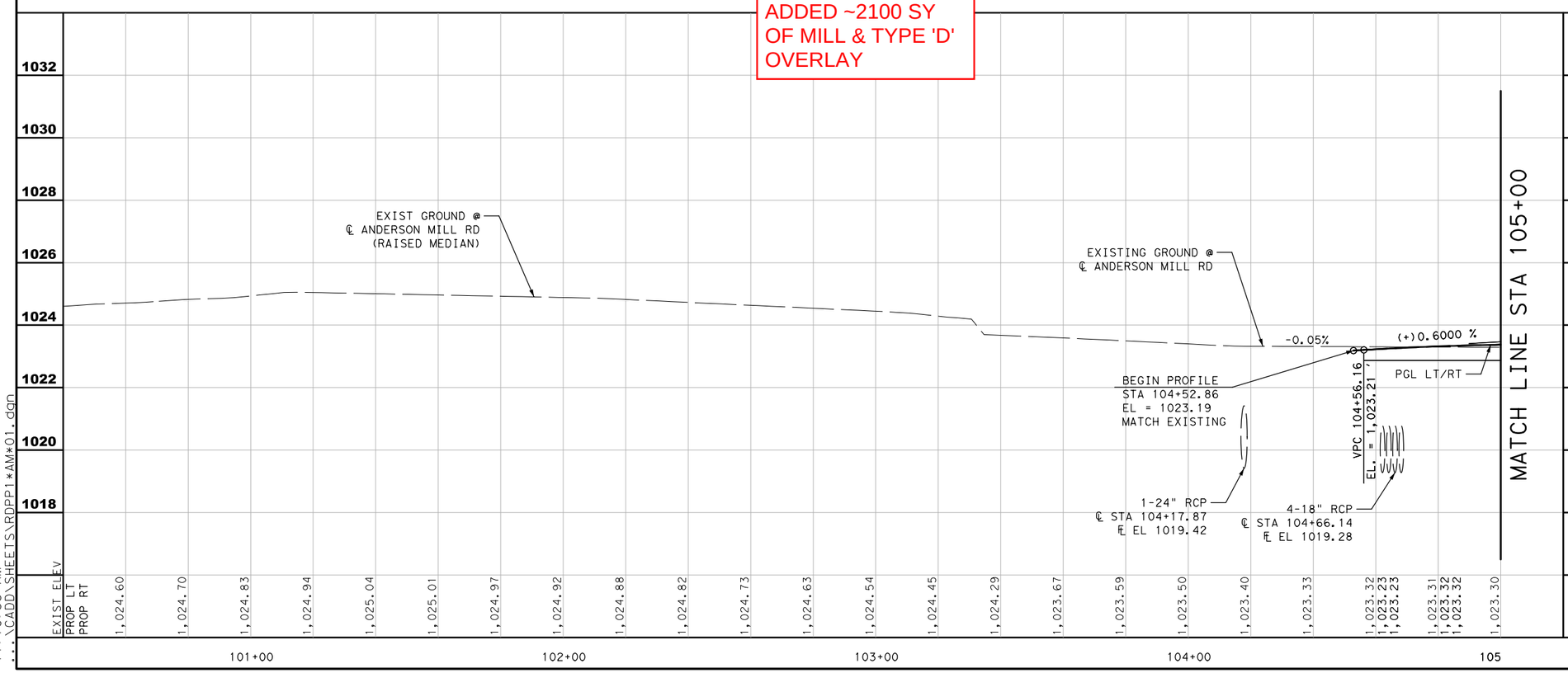

NUMBER	DATE	REVISION	APPROVED

STATE OF TEXAS
GREGORY C. CALKINS
111309
LICENSED
PROFESSIONAL ENGINEER
10/06/2016

CEDAR PARK

Binkley & Barfield, Inc
consulting engineers
Texas Registration Number F-257

ANDERSON MILL ROAD
GASPAR BEND TO WHITESTONE BLVD
PLAN AND PROFILE
BEGIN PROJECT - STA 105+00

DESIGN BY:	GCC
DRAWN BY:	DSH
CHECKED BY:	DRE
APPROVED BY:	BDR
PROJECT NO:	156402
DATE:	10/6/2016

SCALE:
HORIZ: 1"=40'
VERT: 1"= 4'

SHEET: 1 OF 18

PAGE: 56

10/6/2016
11:16:33 AM
...\CADD\SHEETS\RDPP1*AM*01.dgn

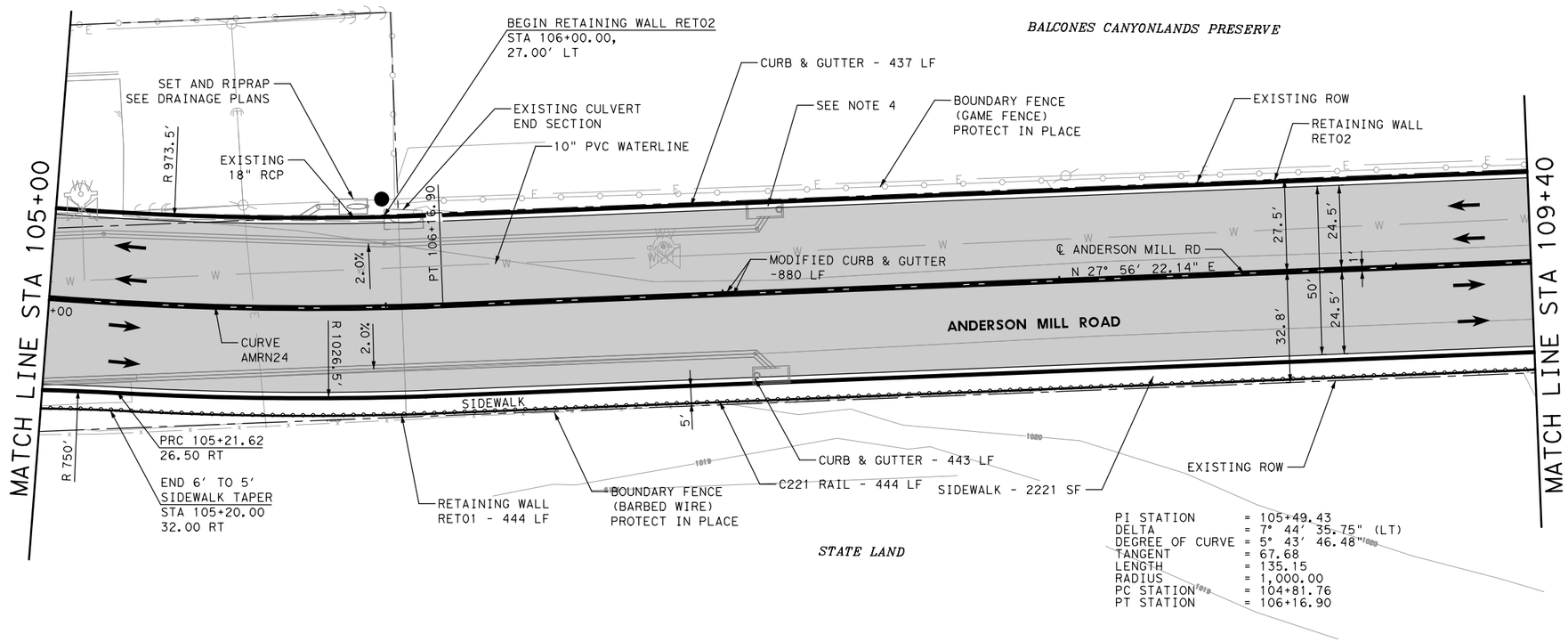

0' 10' 20' 40'

LEGEND

- PROPOSED ASPHALT PAVEMENT
- PROPOSED REINFORCED CONCRETE PAVEMENT
- PROPOSED MEDIAN PAVERS
- PROPOSED TRAFFIC FLOW ARROW
- EXISTING TRAFFIC FLOW ARROW
- PROPOSED POWER POLE (BY OTHERS)

NOTES:

1. UNLESS OTHERWISE NOTED, DIMENSIONS AND PAVING POINTS ARE GIVEN TO NOMINAL FACE OF CURB.
2. FOR NEW STORM DRAIN SYSTEM SEE STORM DRAIN PLANS.
3. FOR WATERLINE RELOCATION OR RECONSTRUCTION SEE WATER PLANS.
4. RETAINING WALL WILL NOT BE CONSTRUCTED WITHIN THE LIMITS OF CURB INLET.

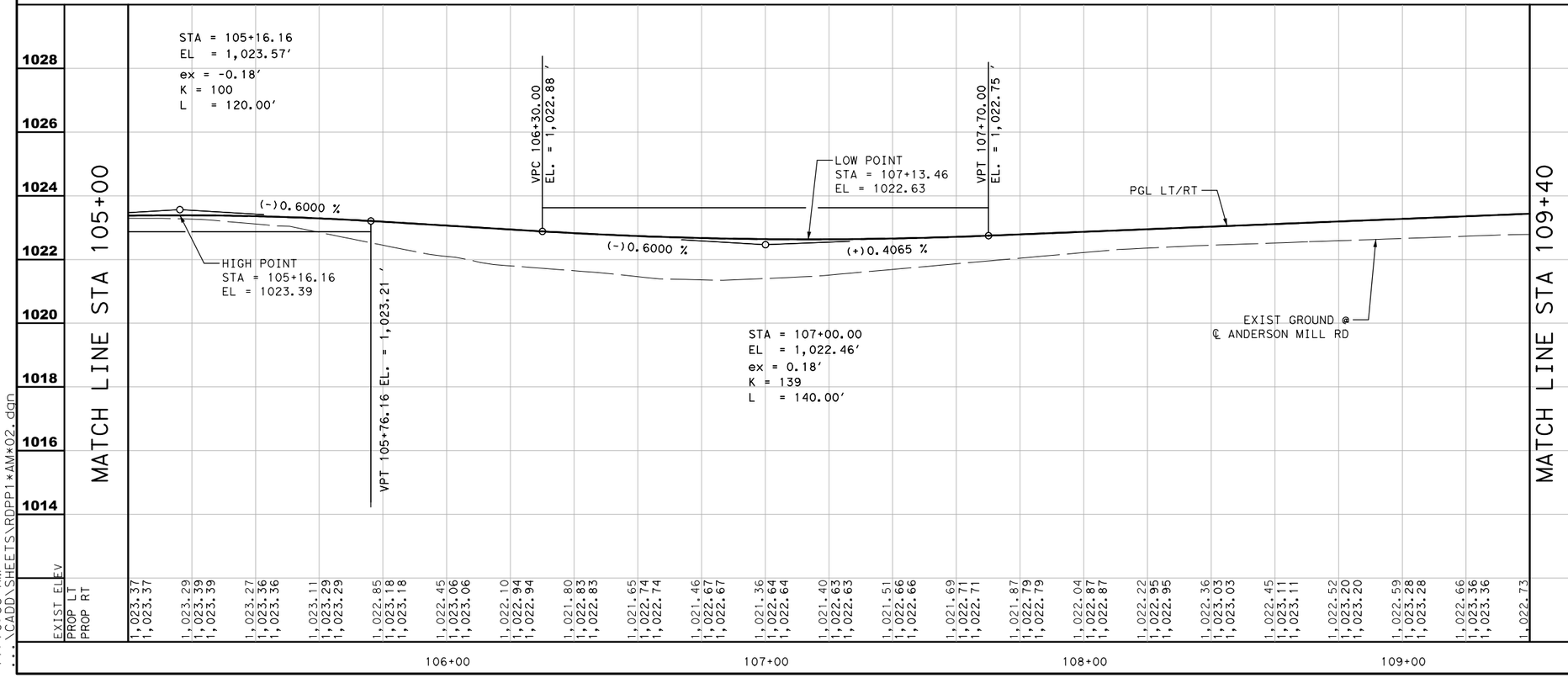

NUMBER	DATE	REVISION	APPROVED

STATE OF TEXAS
GREGORY C. CALKINS
111309
LICENSED
PROFESSIONAL ENGINEER
10/06/2016

CEDAR PARK

Binkley & Barfield, Inc
consulting engineers
Texas Registration Number F-257

ANDERSON MILL ROAD
GASPAR BEND TO WHITESTONE BLVD
PLAN AND PROFILE
STA 105+00 - STA 109+40

DESIGN BY:	GCC	SCALE:	HORIZ: 1"=40' VERT: 1"= 4'
DRAWN BY:	DSH		
CHECKED BY:	DRE		
APPROVED BY:	BDR	SHEET:	2 OF 18
PROJECT NO:	156402		
DATE:	10/6/2016	PAGE:	57

10/6/2016
11:16:35 AM
...\CADD\SHEETS\RDPP1*AM*02.dgn

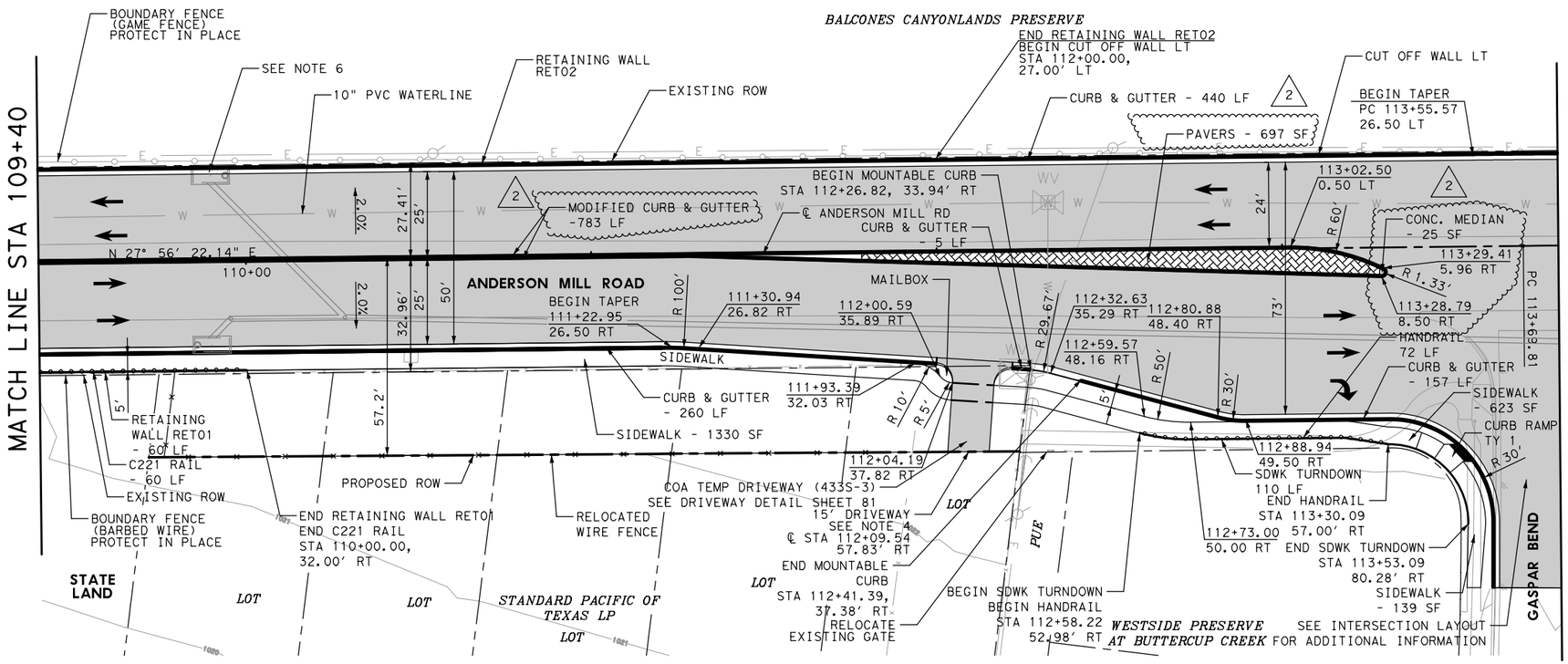

2 ALL REVISIONS TO STORM DRAIN IN PLAN VIEW ONLY.

0' 10' 20' 40'

LEGEND

- PROPOSED ASPHALT PAVEMENT
- PROPOSED REINFORCED CONCRETE PAVEMENT
- PROPOSED MEDIAN PAVERS
- PROPOSED TRAFFIC FLOW ARROW
- EXISTING TRAFFIC FLOW ARROW
- PROPOSED POWER POLE (BY OTHERS)

NOTES:

1. UNLESS OTHERWISE NOTED, DIMENSIONS AND PAVING POINTS ARE GIVEN TO NOMINAL FACE OF CURB.
2. FOR NEW STORM DRAIN SYSTEM SEE STORM DRAIN PLANS.
3. SEE DRIVEWAY DETAIL SHEET RDIN1_AM_01
4. COORDINATE WITH PROPERTY OWNER PRIOR TO DRIVEWAY CONSTRUCTION.
5. FOR WATERLINE RELOCATION OR RECONSTRUCTION SEE WATER PLANS.
6. RETAINING WALL WILL NOT BE CONSTRUCTED WITHIN THE LIMITS OF CURB INLET.

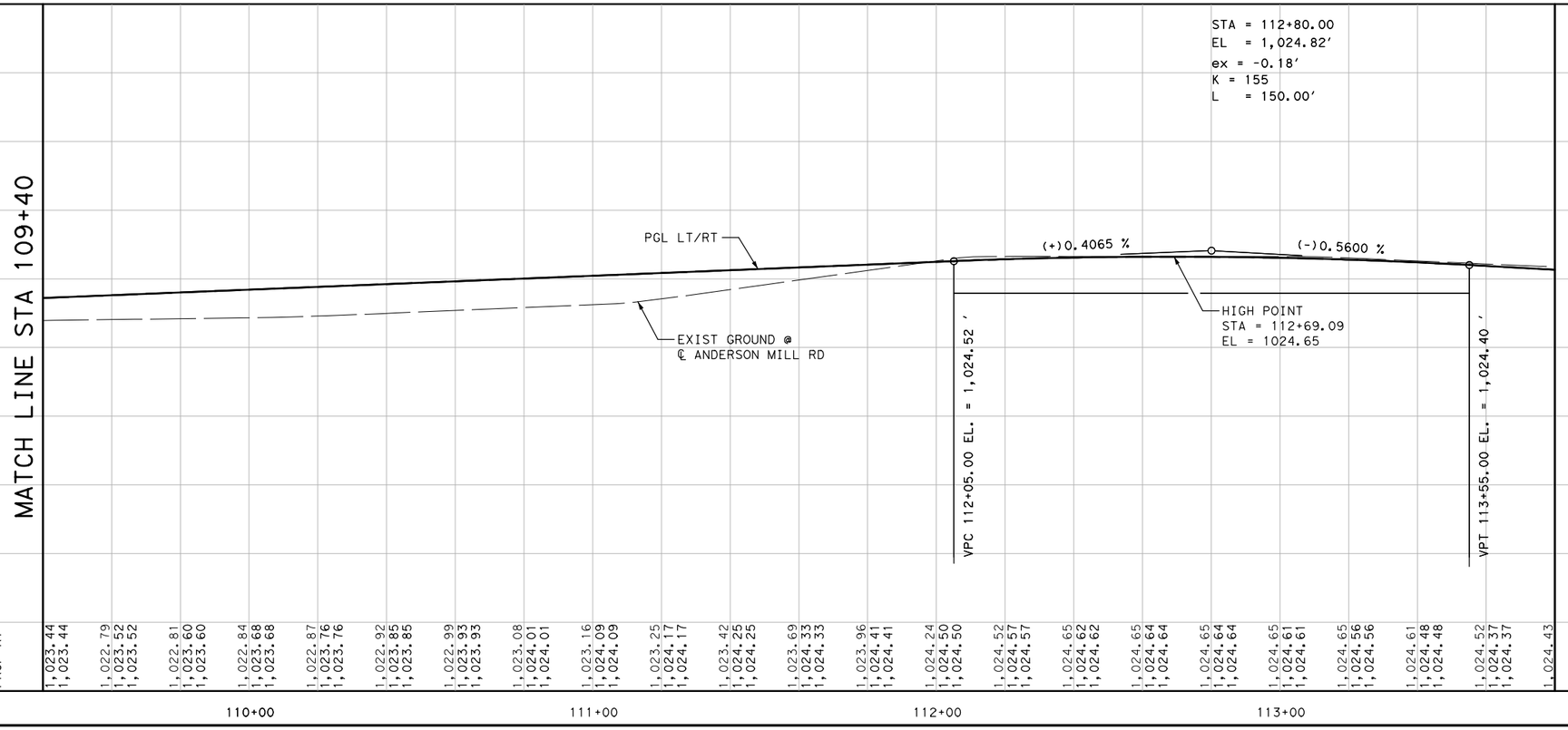

NUMBER	DATE	REVISION	APPROVED
2	6/20/2017	ADDED MEDIAN AND SB LANES NORTH OF GASPAR RD	DRE

STATE OF TEXAS
DENNIS R. ECKER
119381
LICENSED
PROFESSIONAL ENGINEER
10/06/2016

CEDAR PARK

Binkley & Barfield, Inc
consulting engineers
Texas Registration Number F-257

ANDERSON MILL ROAD
GASPAR BEND TO WHITESTONE BLVD
PLAN AND PROFILE
STA 109+40 - STA 113+80

DESIGN BY: GCC
DRAWN BY: DSH
CHECKED BY: DRE
APPROVED BY: BDR
PROJECT NO: 156402
DATE: 6/20/2017

SCALE:
HORIZ: 1"=40'
VERT: 1"= 4'

SHEET: 3 OF 18

PAGE: RDPP1_AM_03

6/20/2017
12:06:57 PM
\\bgaus\Data\bb\trans\156402*Anderson*Mill*Road*North\CADD\SHEETS\RDPP1*AM*03A.dgn

PI STATION = 115+21.75
DELTA = 3° 28′ 52.16" (RT)
DEGREE OF CURVE = 1° 08′ 45.30"
TANGENT = 151.94
LENGTH = 303.79
RADIUS = 5,000.00
PC STATION = 113+69.81
PT STATION = 116+73.60

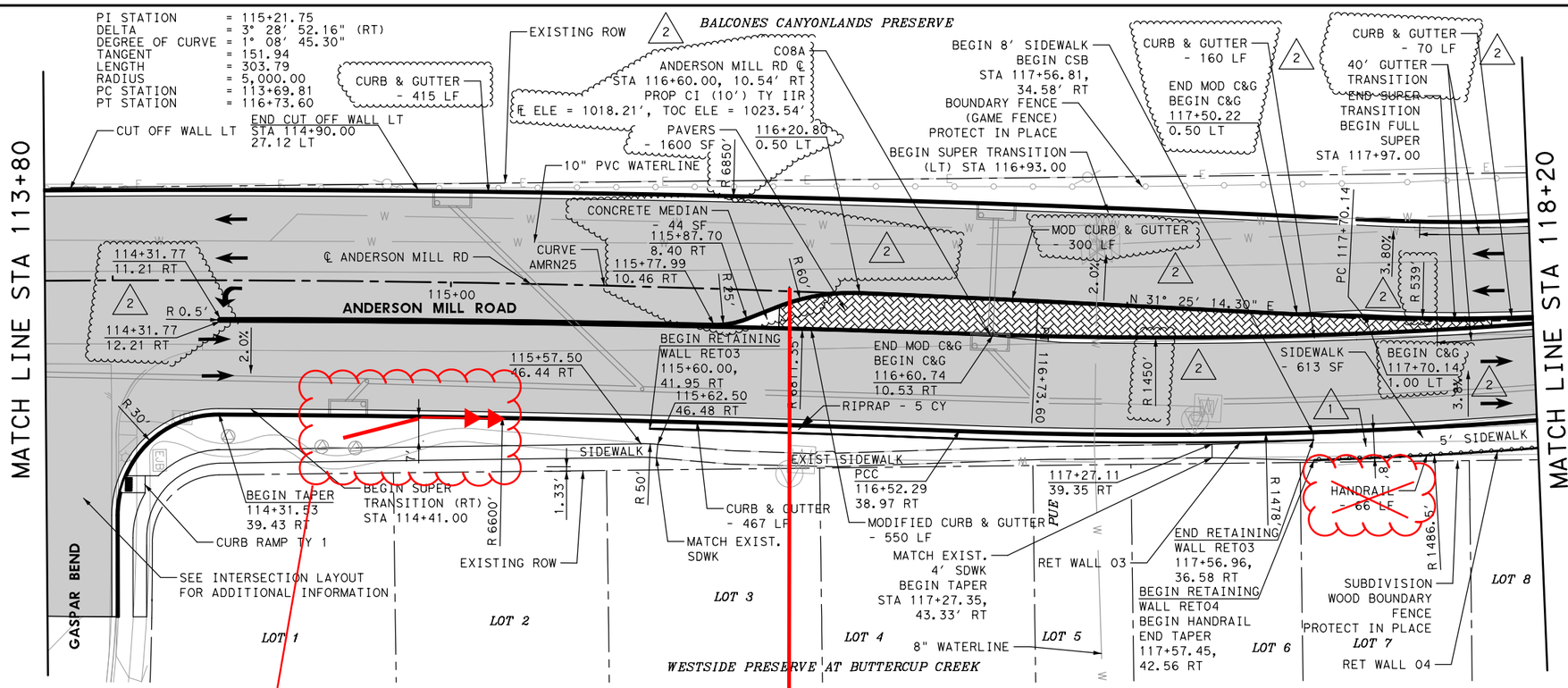

2 ALL REVISIONS TO STORM DRAIN IN PLAN VIEW ONLY.

0′ 10′ 20′ 40′

LEGEND

- PROPOSED ASPHALT PAVEMENT
- PROPOSED REINFORCED CONCRETE PAVEMENT
- PROPOSED MEDIAN PAVERS
- PROPOSED TRAFFIC FLOW ARROW
- EXISTING TRAFFIC FLOW ARROW
- PROPOSED POWER POLE (BY OTHERS)

NOTES:

1. UNLESS OTHERWISE NOTED, DIMENSIONS AND PAVING POINTS ARE GIVEN TO NOMINAL FACE OF CURB.
2. FOR NEW STORM DRAIN SYSTEM SEE STORM DRAIN PLANS.
3. FOR WATERLINE RELOCATION OR RECONSTRUCTION SEE WATER PLANS.

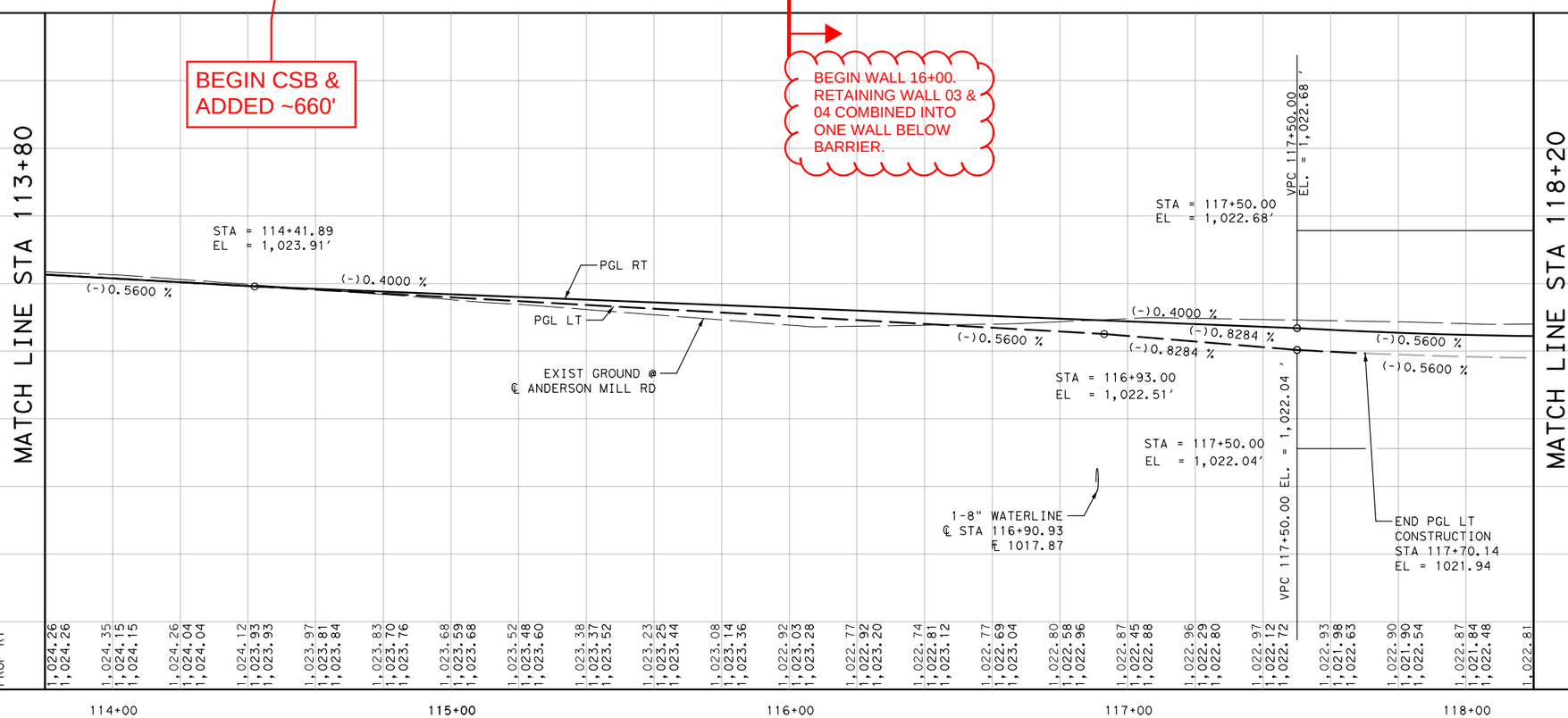

NUMBER	DATE	REVISION	APPROVED
1	3-7-17	EXTEND BARRIER TO SOUTH	DRE
2	6/20/2017	ADDED MEDIAN AND SB LANES NORTH OF GASPAR RD	DRE

STATE OF TEXAS
DENNIS R. ECKER
119381
LICENSED
PROFESSIONAL ENGINEER
10/06/2016

CEDAR PARK

Binkley & Barfield, Inc
consulting engineers
Texas Registration Number F-257

ANDERSON MILL ROAD
GASPAR BEND TO WHITESTONE BLVD
PLAN AND PROFILE
STA 113+80 - STA 118+20

DESIGN BY: GCC
DRAWN BY: DSH
CHECKED BY: DRE
APPROVED BY: BDR
PROJECT NO: 156402
DATE: 6/20/2017

SCALE: HORIZ: 1"=40′ VERT: 1"= 4′
SHEET: 4 OF 18
PAGE: RDPP1_AM_04

6/20/2017 12:07:09 PM
\\pzgus\Data\bbi\trans\156402*Anderson*Mill*Road*North\CADD\SHEETS\RDPP1*AM*04A.dgn

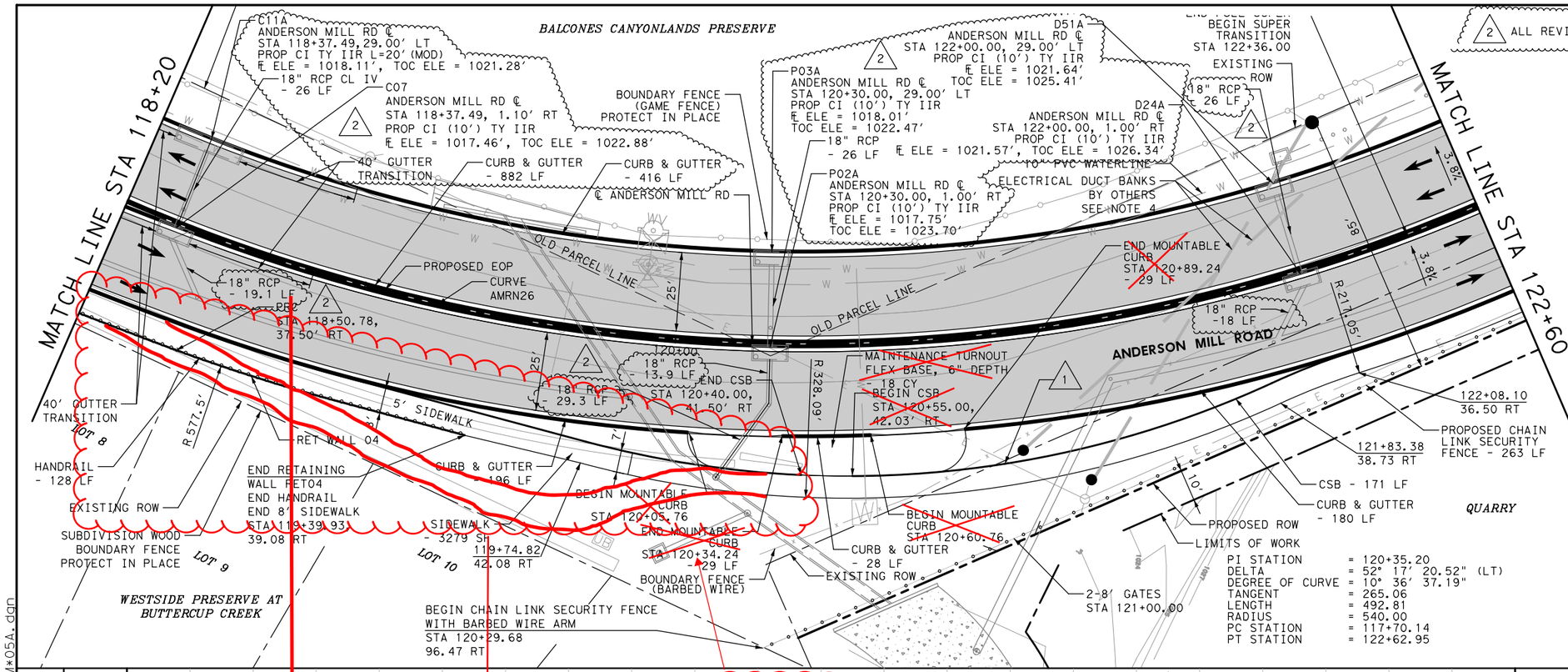

2 ALL REVISIONS TO STORM DRAIN IN PLAN VIEW ONLY.

0' 10' 20' 40'

LEGEND

- PROPOSED ASPHALT PAVEMENT
- PROPOSED REINFORCED CONCRETE PAVEMENT
- PROPOSED MEDIAN PAVERS
- PROPOSED TRAFFIC FLOW ARROW
- EXISTING TRAFFIC FLOW ARROW
- PROPOSED POWER POLE (BY OTHERS)

NOTES:

1. UNLESS OTHERWISE NOTED, DIMENSIONS AND PAVING POINTS ARE GIVEN TO NOMINAL FACE OF CURB.
2. FOR NEW STORM DRAIN SYSTEM SEE STORM DRAIN PLANS.
3. FOR WATERLINE RELOCATION OR RECONSTRUCTION SEE WATER PLANS.
4.

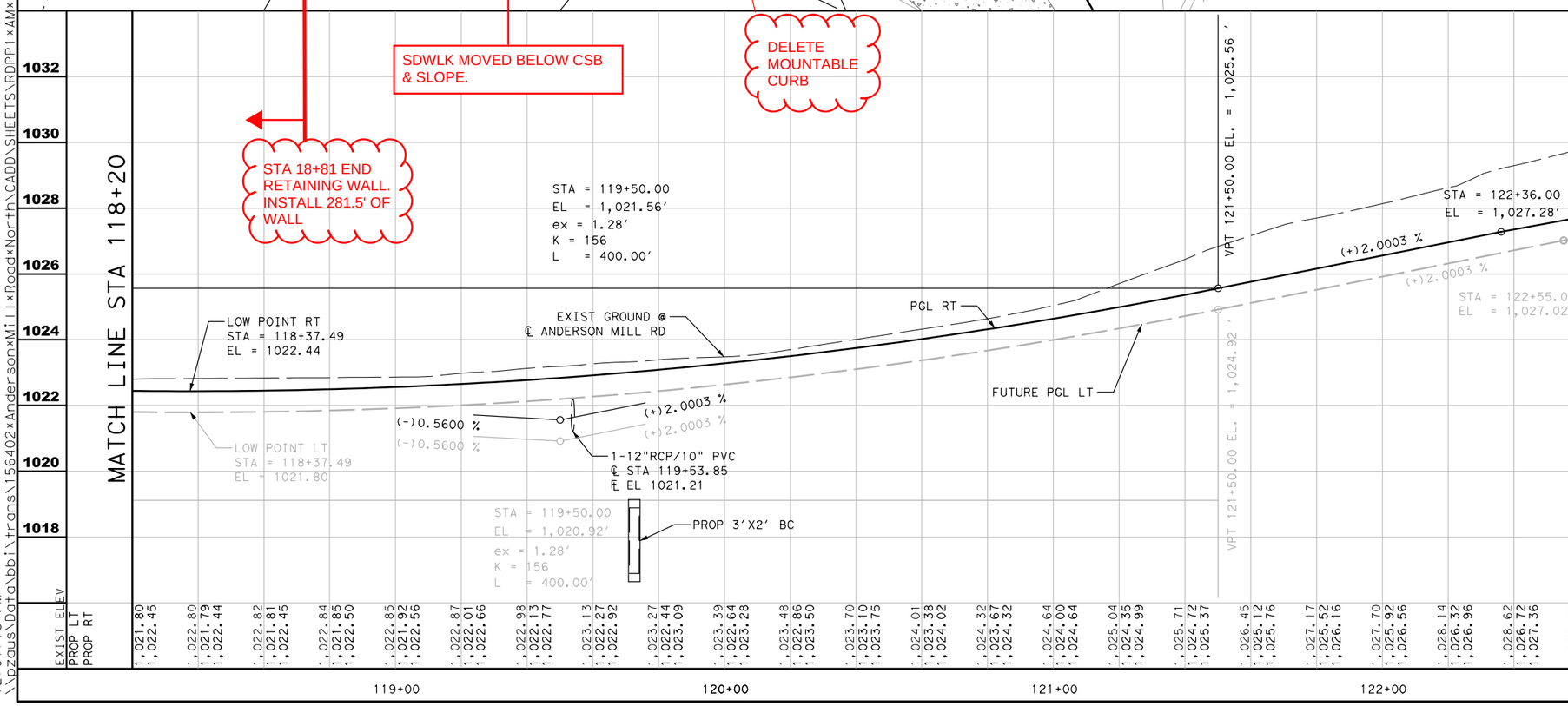

NUMBER	DATE	REVISION	APPROVED
1	3-7-17	EXTEND BARRIER TO SOUTH	DRE
2	6/20/2017	ADDED MEDIAN AND SB LANES NORTH OF GASPAR RD	DRE

STATE OF TEXAS
DENNIS R. ECKER
119381
LICENSED
PROFESSIONAL ENGINEER
10/06/2016

CEDAR PARK

Binkley & Barfield, Inc
consulting engineers
Texas Registration Number F-257

ANDERSON MILL ROAD
GASPAR BEND TO WHITESTONE BLVD
PLAN AND PROFILE
STA 118+20 - STA 122+60

DESIGN BY: GCC
DRAWN BY: DSH
CHECKED BY: DRE
APPROVED BY: BDR
PROJECT NO: 156402
DATE: 6/20/2017

SCALE:
HORIZ: 1"=40'
VERT: 1"= 4'

SHEET: 5 OF 18

PAGE: RDPP1_AM_05

6/20/2017
12:07:15 PM
\\pzgus\Data\bbi\trans\156402*Anderson*Mill*Road*North\CADD\SHEETS\RDPP1*AM*05A.dgn

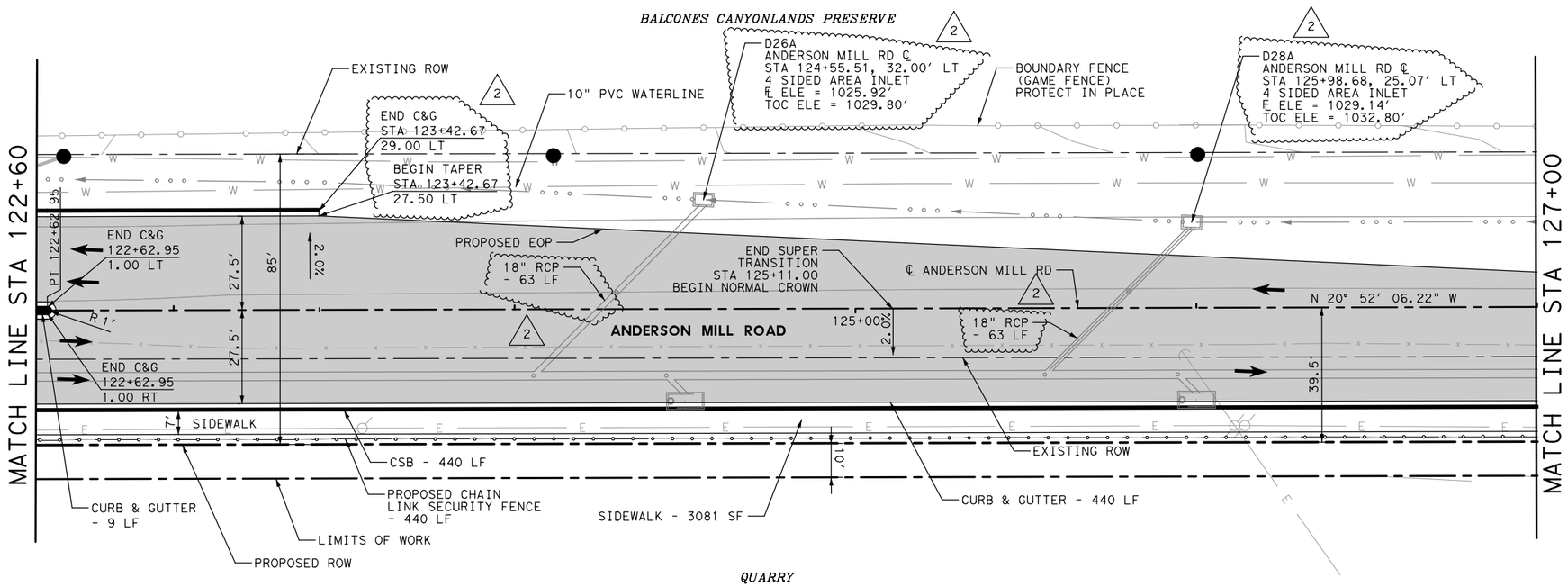

2 ALL REVISIONS TO STORM DRAIN IN PLAN VIEW ONLY.

N

0' 10' 20' 40'

LEGEND

- PROPOSED ASPHALT PAVEMENT
- PROPOSED REINFORCED CONCRETE PAVEMENT
- PROPOSED MEDIAN PAVERS
- PROPOSED TRAFFIC FLOW ARROW
- EXISTING TRAFFIC FLOW ARROW
- PROPOSED POWER POLE (BY OTHERS)

NOTES:

1. UNLESS OTHERWISE NOTED, DIMENSIONS AND PAVING POINTS ARE GIVEN TO NOMINAL FACE OF CURB.
2. FOR NEW STORM DRAIN SYSTEM SEE STORM DRAIN PLANS.
3. FOR WATERLINE RELOCATION OR RECONSTRUCTION SEE WATER PLANS.

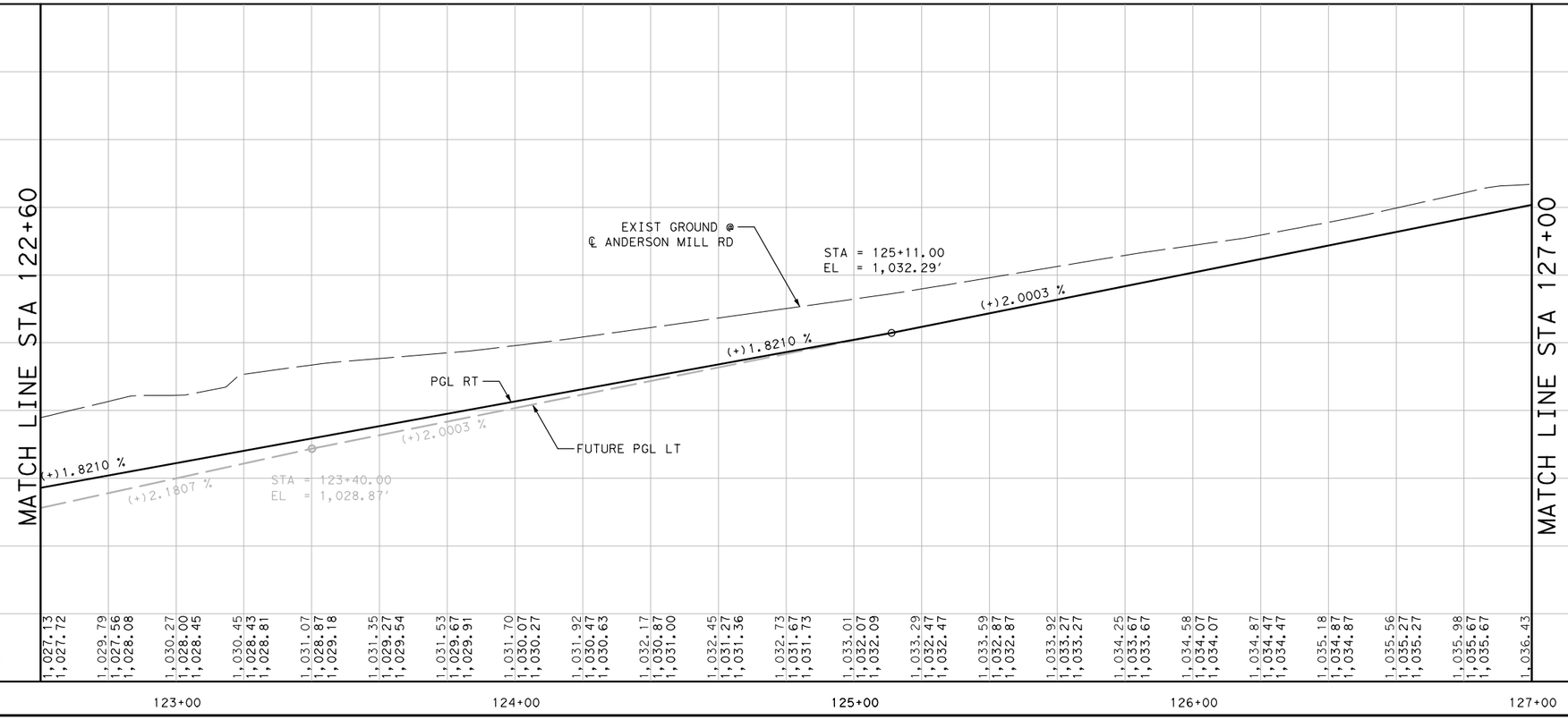

NUMBER	DATE	REVISION	APPROVED
2	6/20/2017	ADDED MEDIAN AND SB LANES NORTH OF GASPAR RD	DRE

STATE OF TEXAS
DENNIS R. ECKER
119381
LICENSED
PROFESSIONAL ENGINEER
10/06/2016

CEDAR PARK

Binkley & Barfield, Inc
consulting engineers
Texas Registration Number F-257

ANDERSON MILL ROAD
GASPAR BEND TO WHITESTONE BLVD
PLAN AND PROFILE
STA 122+60 - STA 127+00

DESIGN BY: GCC
DRAWN BY: DSH
CHECKED BY: DRE
APPROVED BY: BDR
PROJECT NO: 156402
DATE: 6/20/2017

SCALE:
HORIZ: 1"=40'
VERT: 1"= 4'

SHEET: 6 OF 18

PAGE: RDPP1_AM_06

6/20/2017
12:07:22 PM
\\pzsus\Data\bb\trans\156402*Anderson*Mill*Road*North\CADD\SHEETS\RDPP1*AM*06A.dgn

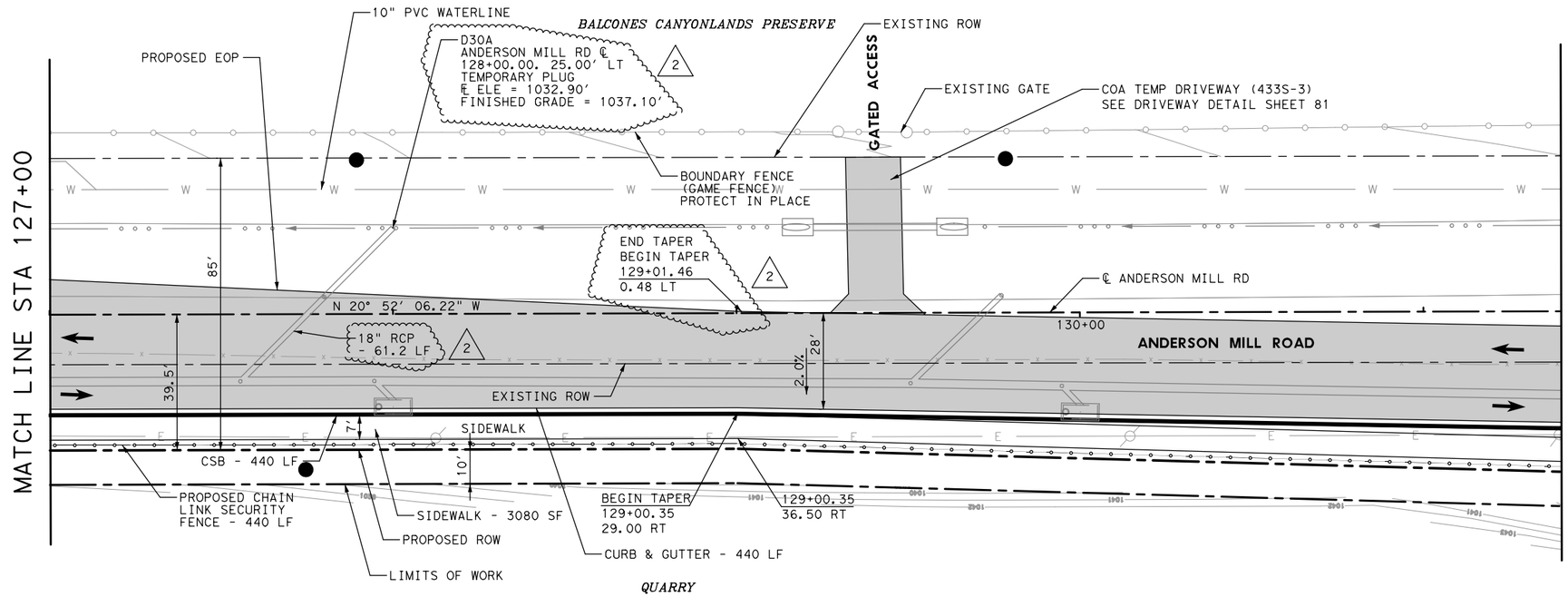

2 ALL REVISIONS TO STORM DRAIN IN PLAN VIEW ONLY.

0' 10' 20' 40'

LEGEND

- PROPOSED ASPHALT PAVEMENT
- PROPOSED REINFORCED CONCRETE PAVEMENT
- PROPOSED MEDIAN PAVERS
- PROPOSED TRAFFIC FLOW ARROW
- EXISTING TRAFFIC FLOW ARROW
- PROPOSED POWER POLE (BY OTHERS)

NOTES:

1. UNLESS OTHERWISE NOTED, DIMENSIONS AND PAVING POINTS ARE GIVEN TO NOMINAL FACE OF CURB.
2. FOR NEW STORM DRAIN SYSTEM SEE STORM DRAIN PLANS.
3. SEE DRIVEWAY DETAIL SHEET RDIN1_AM_01
4. FOR WATERLINE RELOCATION OR RECONSTRUCTION SEE WATER PLANS.

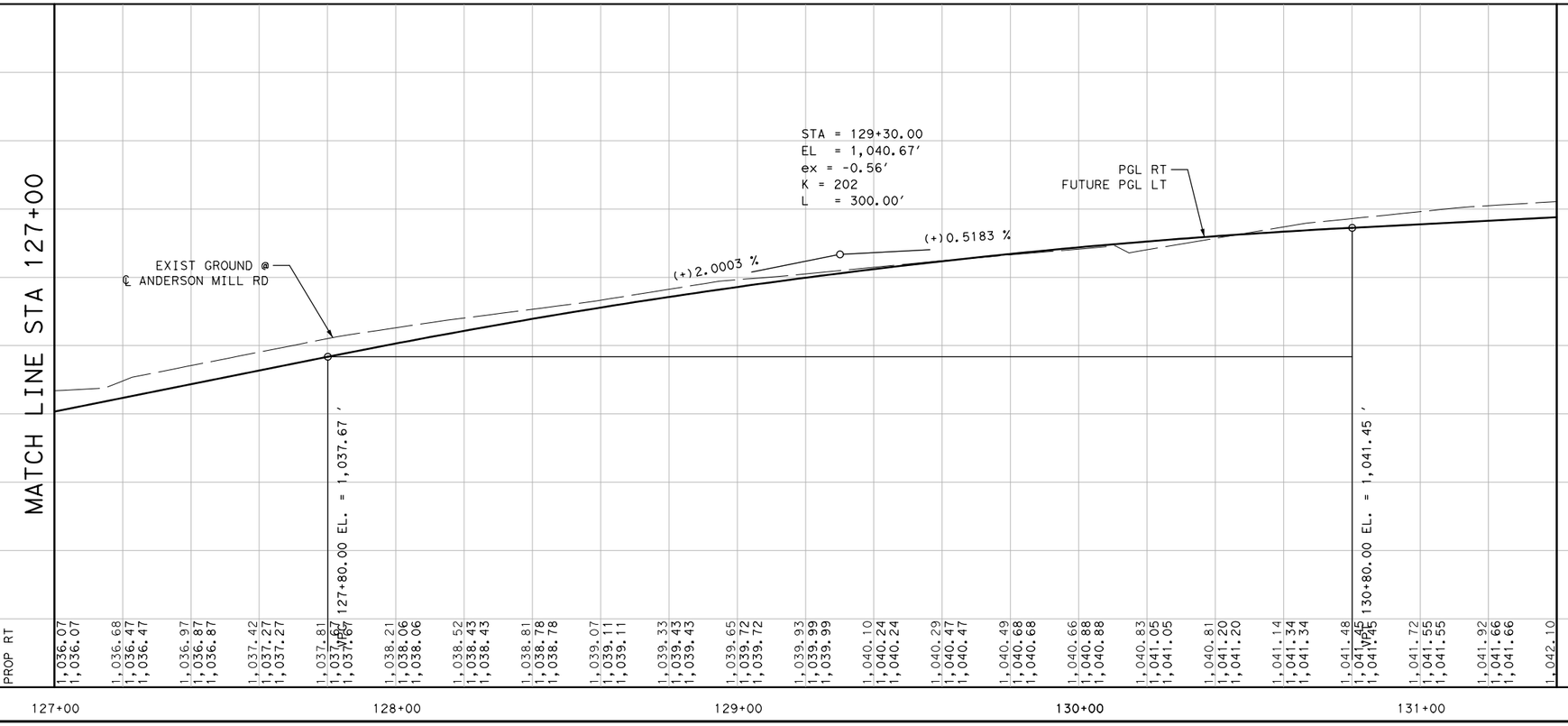

NUMBER	DATE	REVISION	APPROVED
2	6/20/2017	ADDED MEDIAN AND SB LANES NORTH OF GASPAR RD	DRE

STATE OF TEXAS
DENNIS R. ECKER
119381
LICENSED
PROFESSIONAL ENGINEER
10/06/2016

CEDAR PARK

Binkley & Barfield, Inc
consulting engineers
Texas Registration Number F-257

ANDERSON MILL ROAD
GASPAR BEND TO WHITESTONE BLVD
PLAN AND PROFILE
STA 127+00 - STA 131+40

DESIGN BY: GCC
DRAWN BY: DSH
CHECKED BY: DRE
APPROVED BY: BDR
PROJECT NO: 156402
DATE: 6/20/2017

SCALE:
HORIZ: 1"=40'
VERT: 1"= 4'

SHEET: 7 OF 18

PAGE: RDPP1_AM_07

6/20/2017
12:07:28 PM
\\bgaus\data\bb\trans\156402*Anderson*Mill*Road*North\CADD\SHEETS\RDPP1*AM*07A.dgn

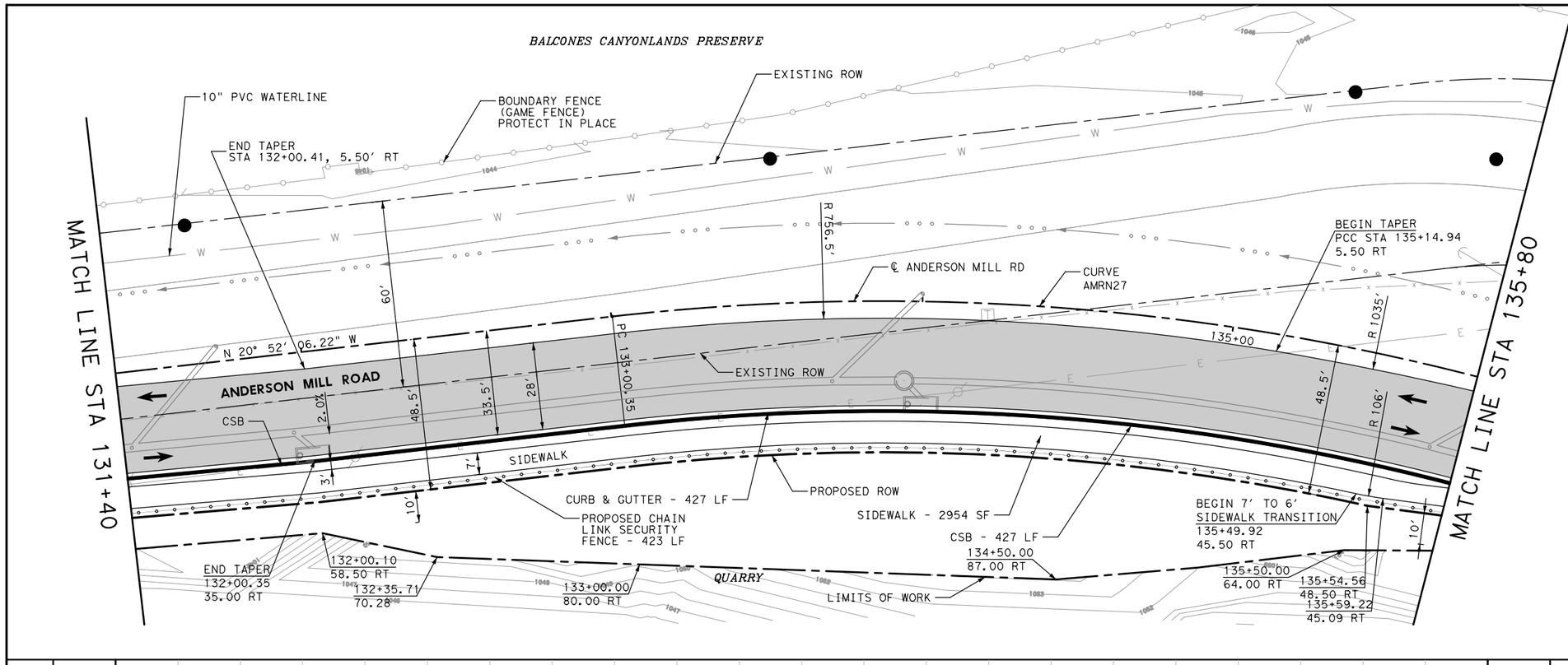

LEGEND

- PROPOSED ASPHALT PAVEMENT
- PROPOSED REINFORCED CONCRETE PAVEMENT
- PROPOSED MEDIAN PAVERS
- PROPOSED TRAFFIC FLOW ARROW
- EXISTING TRAFFIC FLOW ARROW
- PROPOSED POWER POLE (BY OTHERS)

NOTES:

1. UNLESS OTHERWISE NOTED, DIMENSIONS AND PAVING POINTS ARE GIVEN TO NOMINAL FACE OF CURB.
2. FOR NEW STORM DRAIN SYSTEM SEE STORM DRAIN PLANS.
3. FOR WATERLINE RELOCATION OR RECONSTRUCTION SEE WATER PLANS.

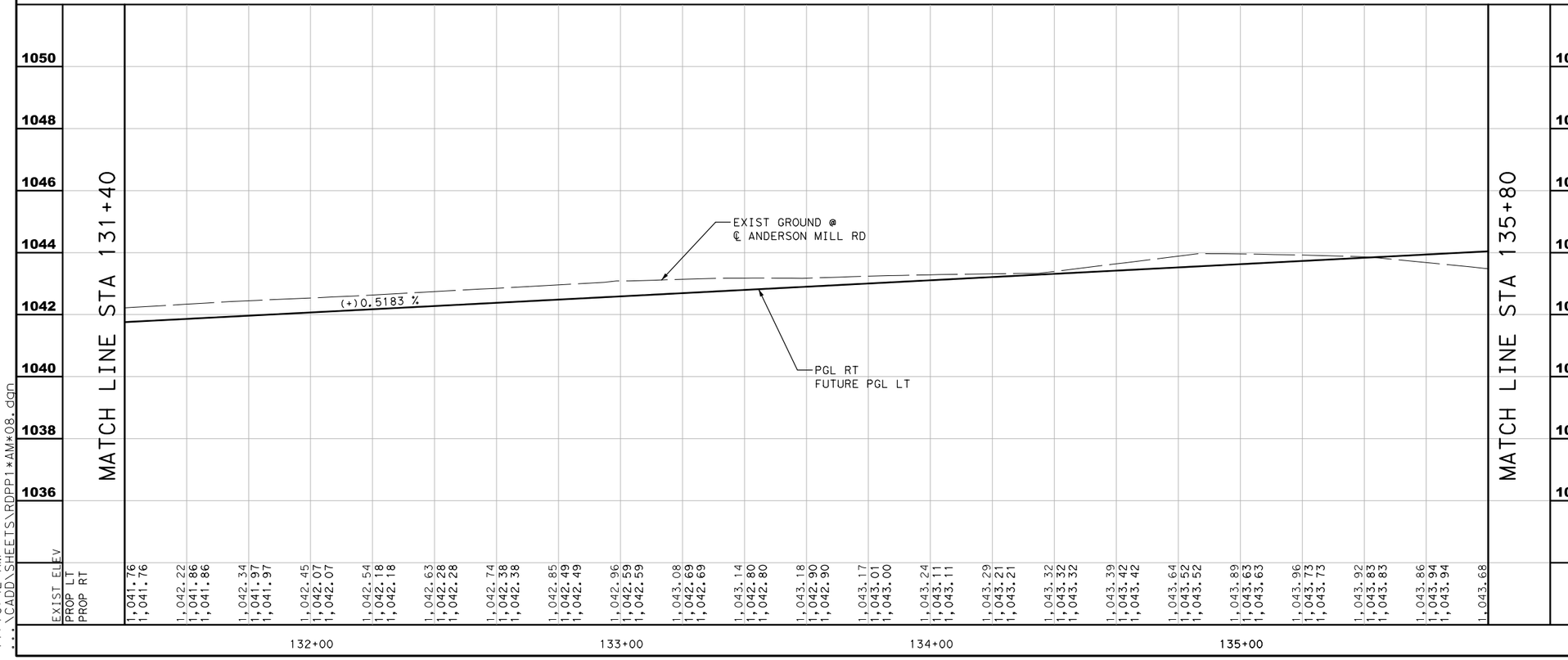

NUMBER	DATE	REVISION	APPROVED

STATE OF TEXAS
GREGORY C. CALKINS
111309
LICENSED
PROFESSIONAL ENGINEER
10/06/2016

CEDAR PARK

Binkley & Barfield, Inc
consulting engineers
Texas Registration Number F-257

ANDERSON MILL ROAD
GASPAR BEND TO WHITESTONE BLVD
PLAN AND PROFILE
STA 131+40 - STA 135+80

DESIGN BY:	GCC
DRAWN BY:	DSH
CHECKED BY:	DRE
APPROVED BY:	BDR
PROJECT NO:	156402
DATE:	10/6/2016

SCALE:
HORIZ: 1"=40'
VERT: 1"= 4'

SHEET: 8 OF 18

PAGE: 63

10/6/2016
11:16:42 AM
...\CADD\SHEETS\RDPP1*AM*08.dgn

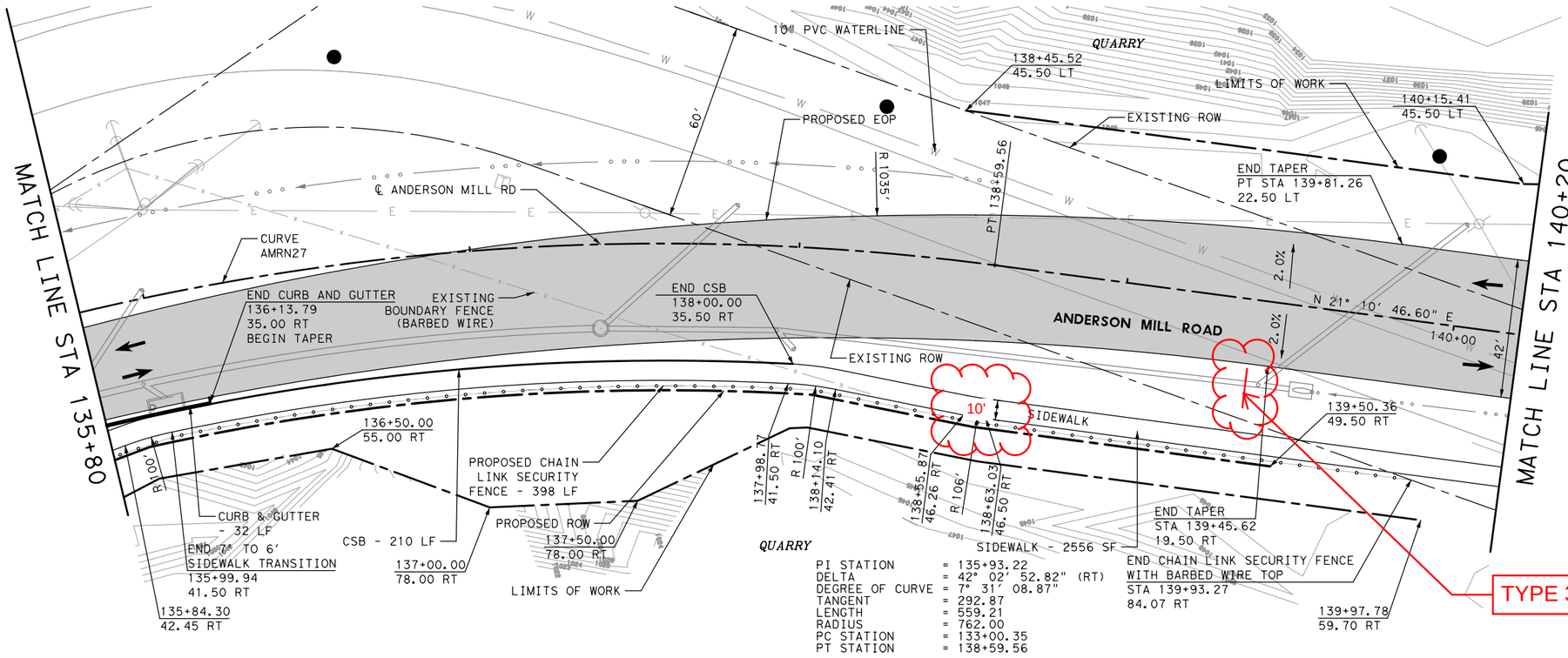

PI STATION = 135+93.22
DELTA = 42° 02' 52.82" (RT)
DEGREE OF CURVE = 7° 31' 08.87"
TANGENT = 292.87
LENGTH = 559.21
RADIUS = 762.00
PC STATION = 133+00.35
PT STATION = 138+59.56

0' 10' 20' 40'

LEGEND

- PROPOSED ASPHALT PAVEMENT
- PROPOSED REINFORCED CONCRETE PAVEMENT
- PROPOSED MEDIAN PAVERS
- PROPOSED TRAFFIC FLOW ARROW
- EXISTING TRAFFIC FLOW ARROW
- PROPOSED POWER POLE (BY OTHERS)

NOTES:

1. UNLESS OTHERWISE NOTED, DIMENSIONS AND PAVING POINTS ARE GIVEN TO NOMINAL FACE OF CURB.
2. FOR NEW STORM DRAIN SYSTEM SEE STORM DRAIN PLANS.
3. FOR WATERLINE RELOCATION OR RECONSTRUCTION SEE WATER PLANS.

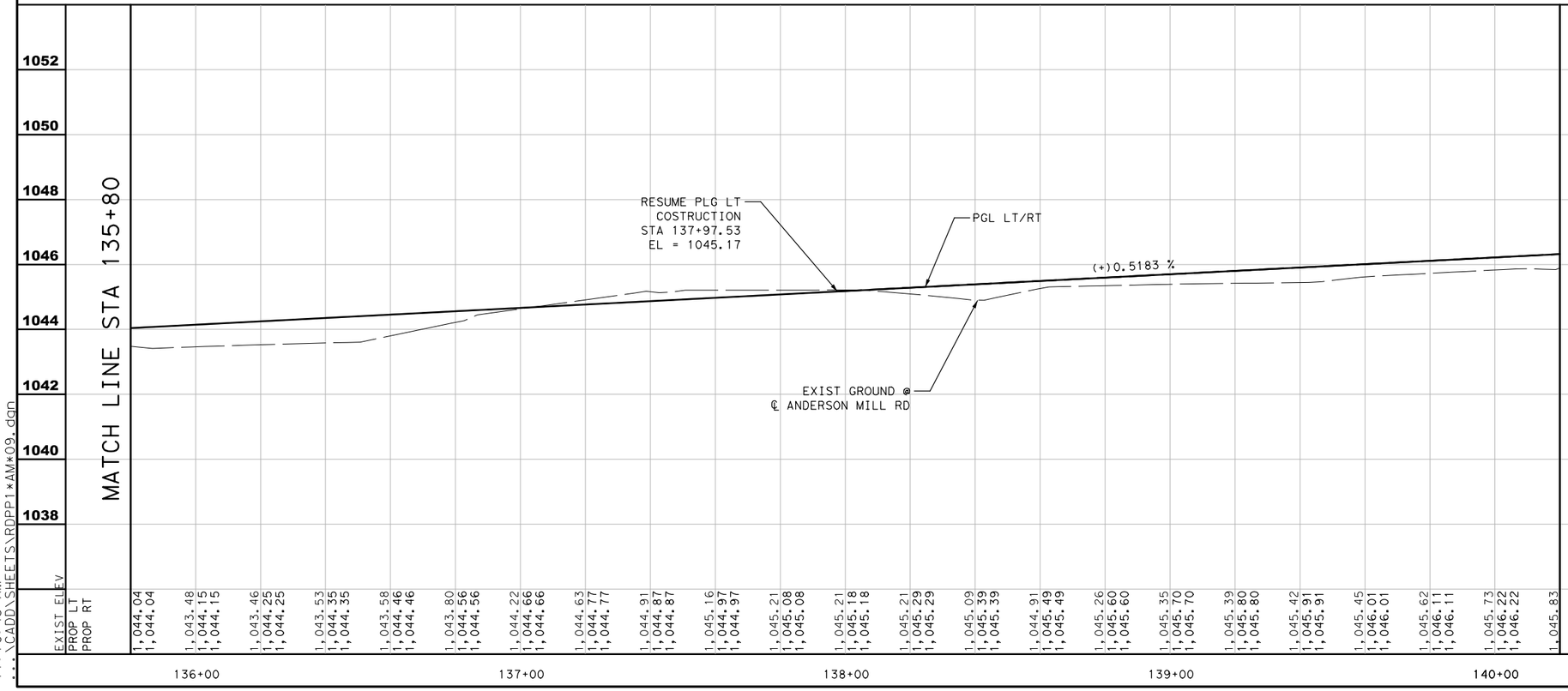

NUMBER	DATE	REVISION	APPROVED

STATE OF TEXAS
GREGORY C. CALKINS
111309
LICENSED
PROFESSIONAL ENGINEER
10/06/2016

CEDAR PARK

Binkley & Barfield, Inc
consulting engineers
Texas Registration Number F-257

ANDERSON MILL ROAD
GASPAR BEND TO WHITESTONE BLVD
PLAN AND PROFILE
STA 135+80 - STA 140+20

DESIGN BY:	GCC
DRAWN BY:	DSH
CHECKED BY:	DRE
APPROVED BY:	BDR
PROJECT NO:	156402
DATE:	10/6/2016

SCALE:
HORIZ: 1"=40'
VERT: 1"= 4'

SHEET: 9 OF 18

PAGE: 64

10/6/2016
11:16:43 AM
...\CADD\SHEETS\RDPP1*AM*09.dgn

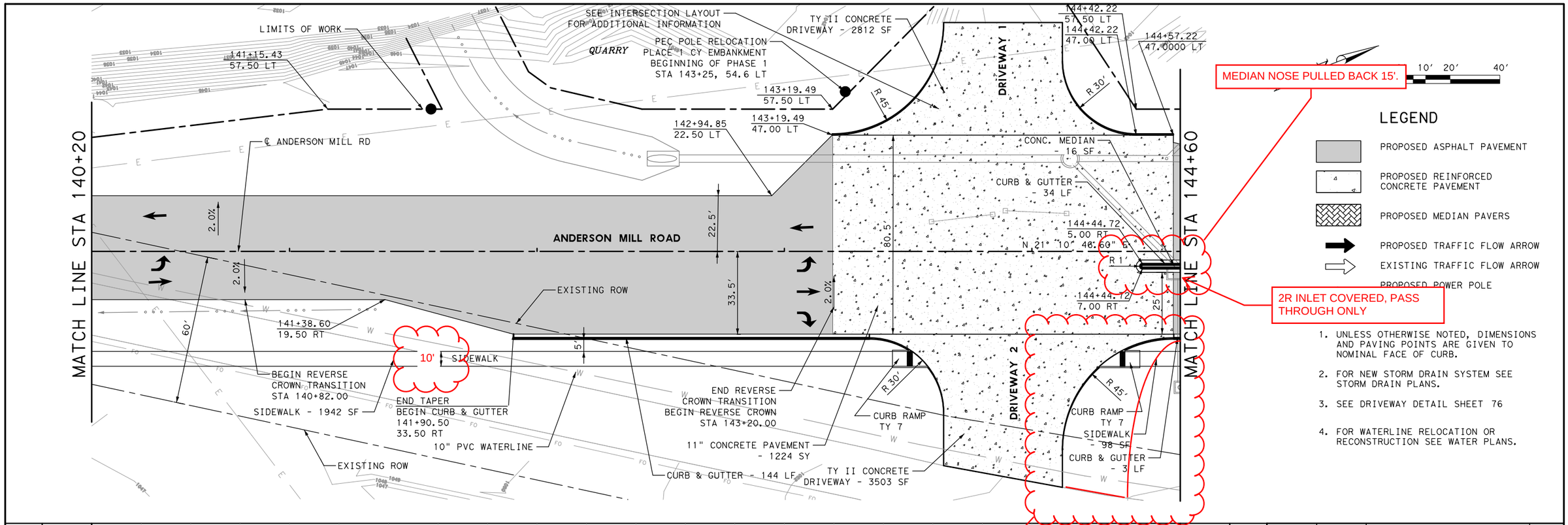

1. UNLESS OTHERWISE NOTED, DIMENSIONS AND PAVING POINTS ARE GIVEN TO NOMINAL FACE OF CURB.
2. FOR NEW STORM DRAIN SYSTEM SEE STORM DRAIN PLANS.
3. SEE DRIVEWAY DETAIL SHEET 76
4. FOR WATERLINE RELOCATION OR RECONSTRUCTION SEE WATER PLANS.

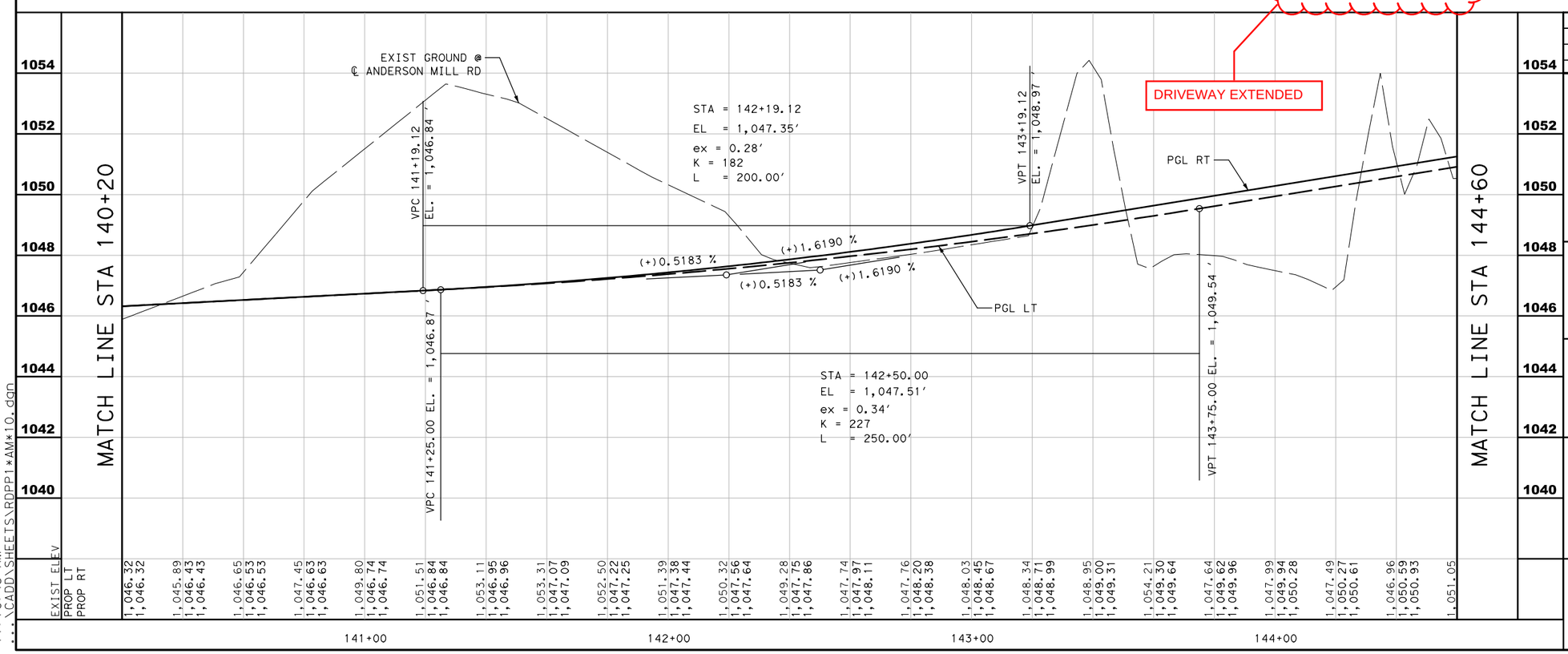

NUMBER	DATE	REVISION	APPROVED

STATE OF TEXAS
GREGORY C. CALKINS
111309
LICENSED
PROFESSIONAL ENGINEER
10/06/2016

CEDAR PARK

Binkley & Barfield, Inc
consulting engineers
Texas Registration Number F-257

ANDERSON MILL ROAD
GASPAR BEND TO WHITESTONE BLVD
PLAN AND PROFILE
STA 140+20 - STA 144+60

DESIGN BY:	GCC
DRAWN BY:	DSH
CHECKED BY:	DRE
APPROVED BY:	BDR
PROJECT NO:	156402
DATE:	10/6/2016

SCALE:
HORIZ: 1"=40'
VERT: 1"= 4'

SHEET: 10 OF 18

PAGE: 65

10/6/2016
11:16:45 AM
...\CADD\SHEETS\RDPP1*AM*10.dgn

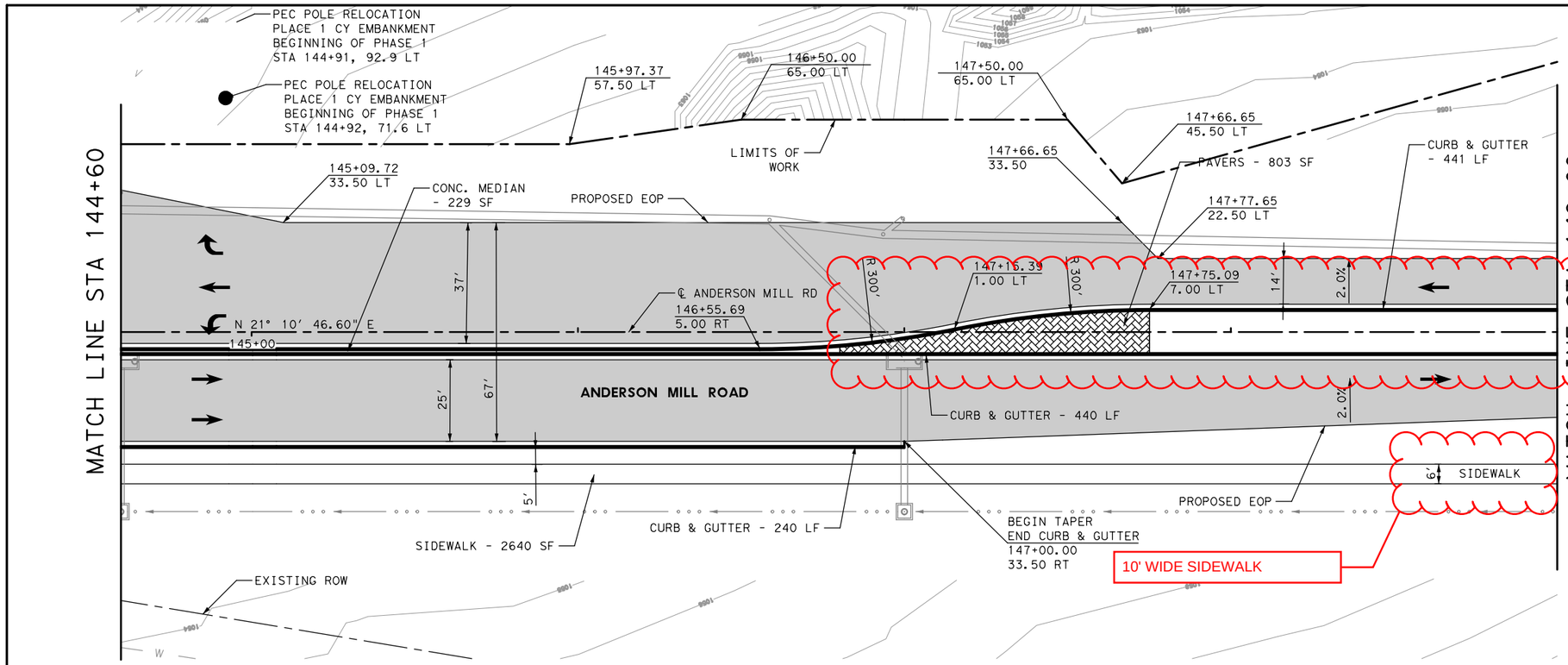

LEGEND

- PROPOSED ASPHALT PAVEMENT
- PROPOSED REINFORCED CONCRETE PAVEMENT
- PROPOSED MEDIAN PAVERS
- PROPOSED TRAFFIC FLOW ARROW
- EXISTING TRAFFIC FLOW ARROW
- PROPOSED POWER POLE (BY OTHERS)

NOTES:

1. UNLESS OTHERWISE NOTED, DIMENSIONS AND PAVING POINTS ARE GIVEN TO NOMINAL FACE OF CURB.
2. FOR NEW STORM DRAIN SYSTEM SEE STORM DRAIN PLANS.
3. FOR WATERLINE RELOCATION OR RECONSTRUCTION SEE WATER PLANS.

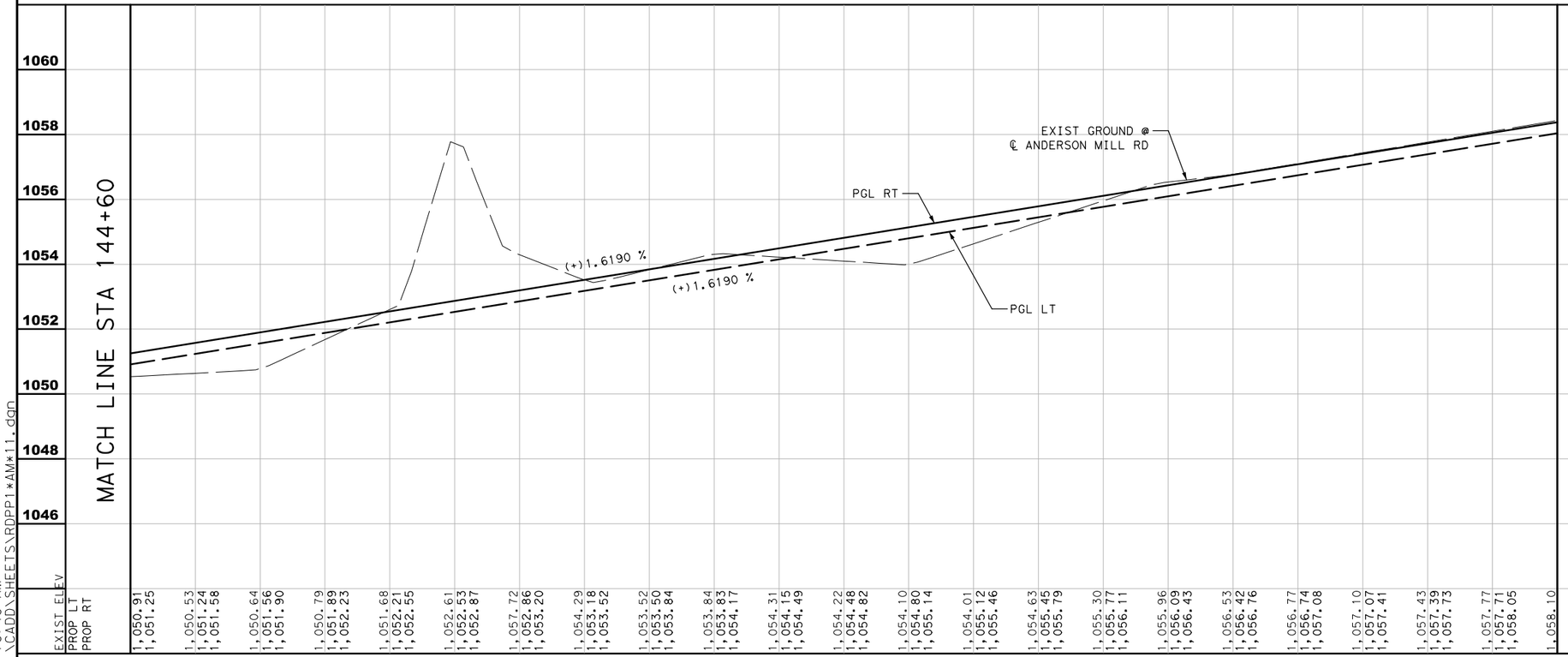

NUMBER	DATE	REVISION	APPROVED

STATE OF TEXAS
GREGORY C. CALKINS
111309
LICENSED
PROFESSIONAL ENGINEER
10/06/2016

CEDAR PARK

Binkley & Barfield, Inc
consulting engineers
Texas Registration Number F-257

ANDERSON MILL ROAD
GASPAR BEND TO WHITESTONE BLVD
PLAN AND PROFILE
STA 144+60 - STA 149+00

DESIGN BY:	GCC	SCALE:	HORIZ: 1"=40' VERT: 1"= 4'
DRAWN BY:	DSH		
CHECKED BY:	DRE		
APPROVED BY:	BDR	SHEET:	11 OF 18
PROJECT NO:	156402		
DATE:	10/6/2016	PAGE:	66

10/6/2016
11:16:46 AM
...\CADD\SHEETS\RDPP1*AM*11.dgn

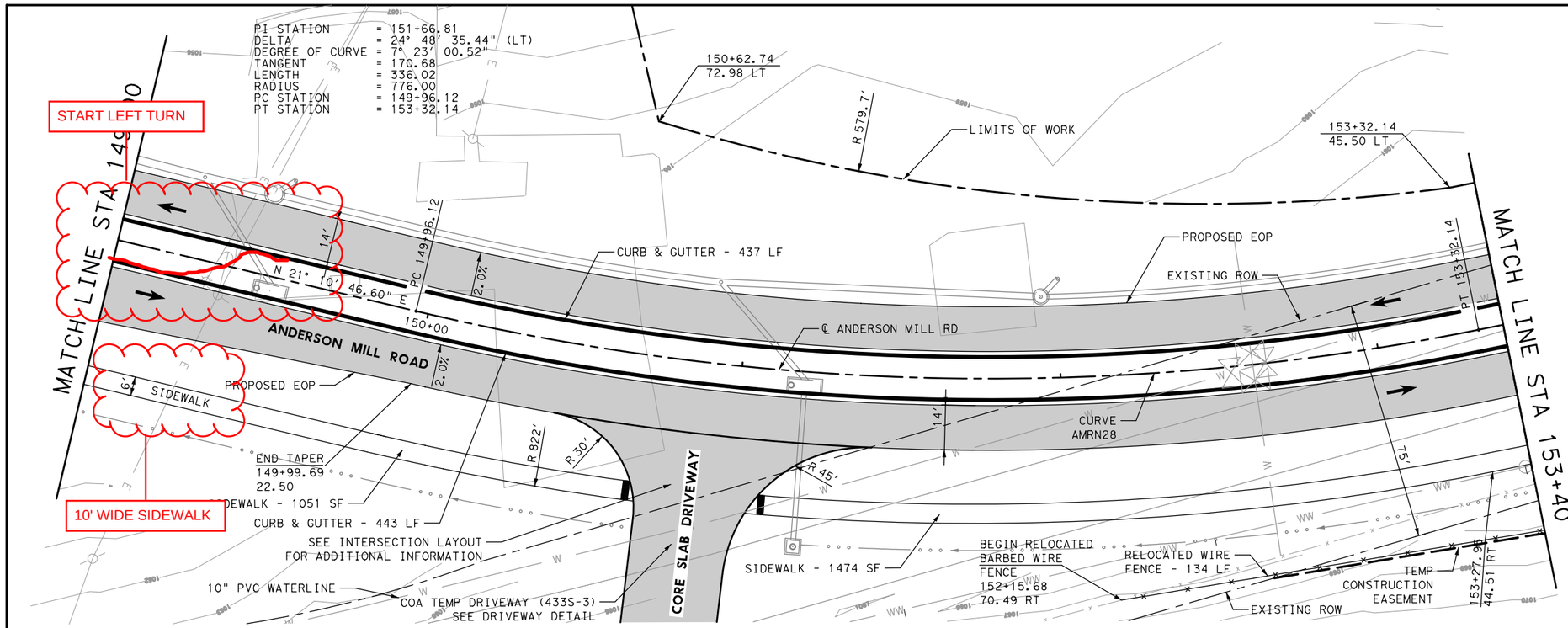

0' 10' 20' 40'

LEGEND

- PROPOSED ASPHALT PAVEMENT
- PROPOSED REINFORCED CONCRETE PAVEMENT
- PROPOSED MEDIAN PAVERS
- PROPOSED TRAFFIC FLOW ARROW
- EXISTING TRAFFIC FLOW ARROW
- PROPOSED POWER POLE (BY OTHERS)

NOTES:

1. UNLESS OTHERWISE NOTED, DIMENSIONS AND PAVING POINTS ARE GIVEN TO NOMINAL FACE OF CURB.
2. FOR NEW STORM DRAIN SYSTEM SEE STORM DRAIN PLANS.
3. FOR WATERLINE RELOCATION OR RECONSTRUCTION SEE WATER PLANS.
4. FOR NEW SANITARY SEWER AND FORCE MAIN SEE WASTEWATER PLANS.

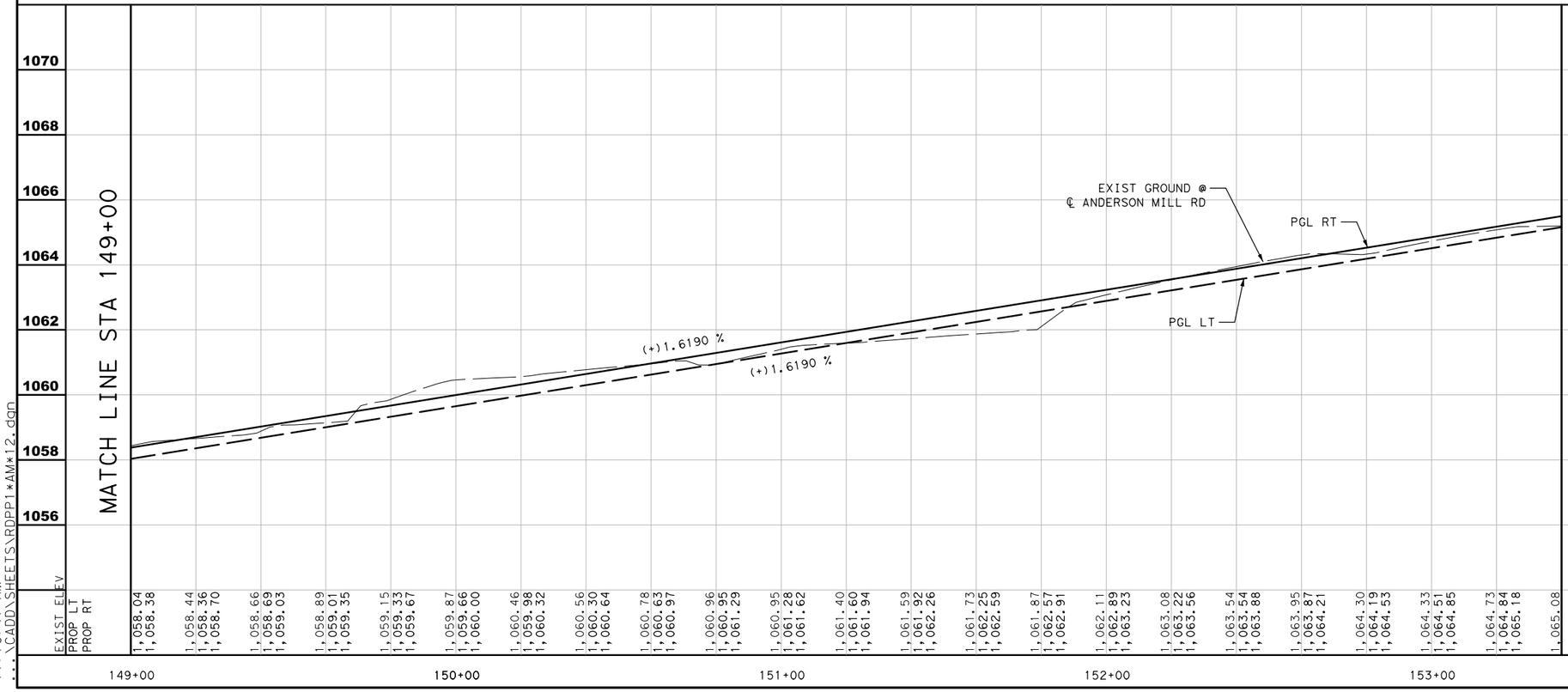

NUMBER	DATE	REVISION	APPROVED

STATE OF TEXAS
GREGORY C. CALKINS
111309
LICENSED
PROFESSIONAL ENGINEER
10/06/2016

CEDAR PARK

Binkley & Barfield, Inc
consulting engineers
Texas Registration Number F-257

ANDERSON MILL ROAD
GASPAR BEND TO WHITESTONE BLVD
PLAN AND PROFILE
STA 149+00 - STA 153+40

DESIGN BY:	GCC
DRAWN BY:	DSH
CHECKED BY:	DRE
APPROVED BY:	BDR
PROJECT NO:	156402
DATE:	10/6/2016

SCALE:
HORIZ: 1"=40'
VERT: 1"= 4'

SHEET: 12 OF 18

PAGE: 67

10/6/2016
11:16:47 AM
...\CADD\SHEETS\RDPP1*AM*12.dgn

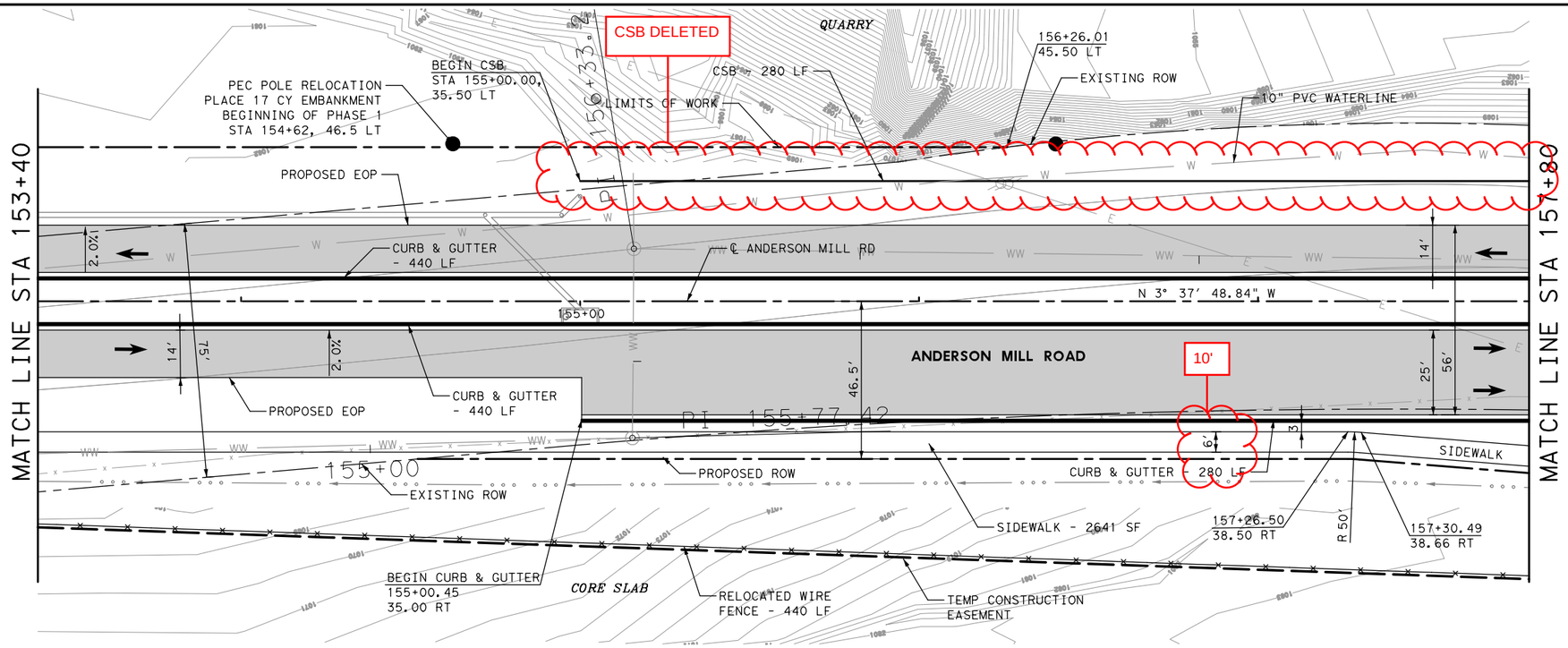

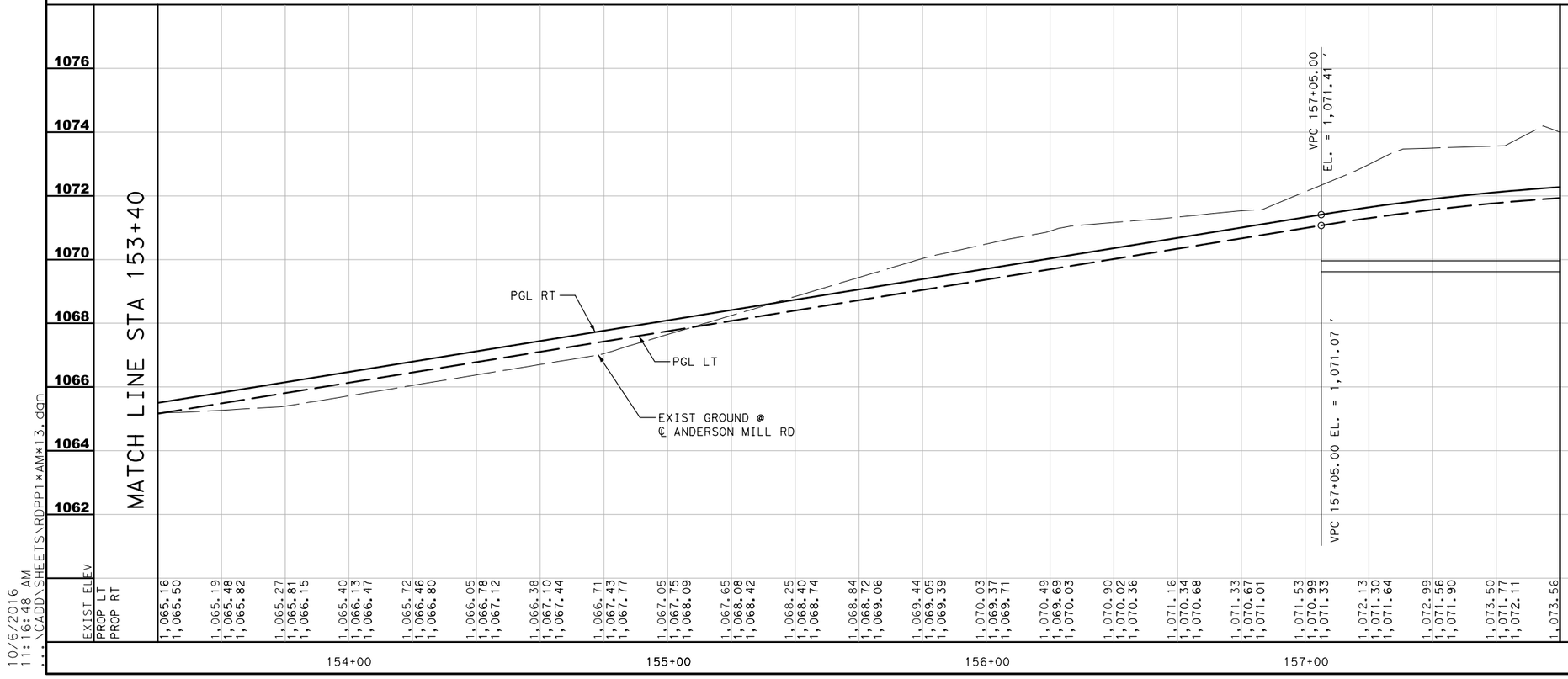

0' 10' 20' 40'

LEGEND

- PROPOSED ASPHALT PAVEMENT
- PROPOSED REINFORCED CONCRETE PAVEMENT
- PROPOSED MEDIAN PAVERS
- PROPOSED TRAFFIC FLOW ARROW
- EXISTING TRAFFIC FLOW ARROW
- PROPOSED POWER POLE (BY OTHERS)

NOTES:

1. UNLESS OTHERWISE NOTED, DIMENSIONS AND PAVING POINTS ARE GIVEN TO NOMINAL FACE OF CURB.
2. FOR NEW STORM DRAIN SYSTEM SEE STORM DRAIN PLANS.
3. FOR WATERLINE RELOCATION OR RECONSTRUCTION SEE WATER PLANS.
4. FOR NEW SANITARY SEWER AND FORCE MAIN SEE WASTEWATER PLANS.

NUMBER	DATE	REVISION	APPROVED

STATE OF TEXAS
GREGORY C. CALKINS
111309
LICENSED
PROFESSIONAL ENGINEER
10/06/2016

CEDAR PARK

Binkley & Barfield, Inc
consulting engineers
Texas Registration Number F-257

ANDERSON MILL ROAD
GASPAR BEND TO WHITESTONE BLVD
PLAN AND PROFILE
STA 153+40 - STA 157+80

DESIGN BY:	GCC	SCALE:	HORIZ: 1"=40' VERT: 1"= 4'
DRAWN BY:	DSH		
CHECKED BY:	DRE		
APPROVED BY:	BDR	SHEET: 13 OF 18	
PROJECT NO:	156402		
DATE:	10/6/2016	PAGE: 68	

10/6/2016
11:16:48 AM
...\CADD\SHEETS\RDPP1*AM*13.dgn

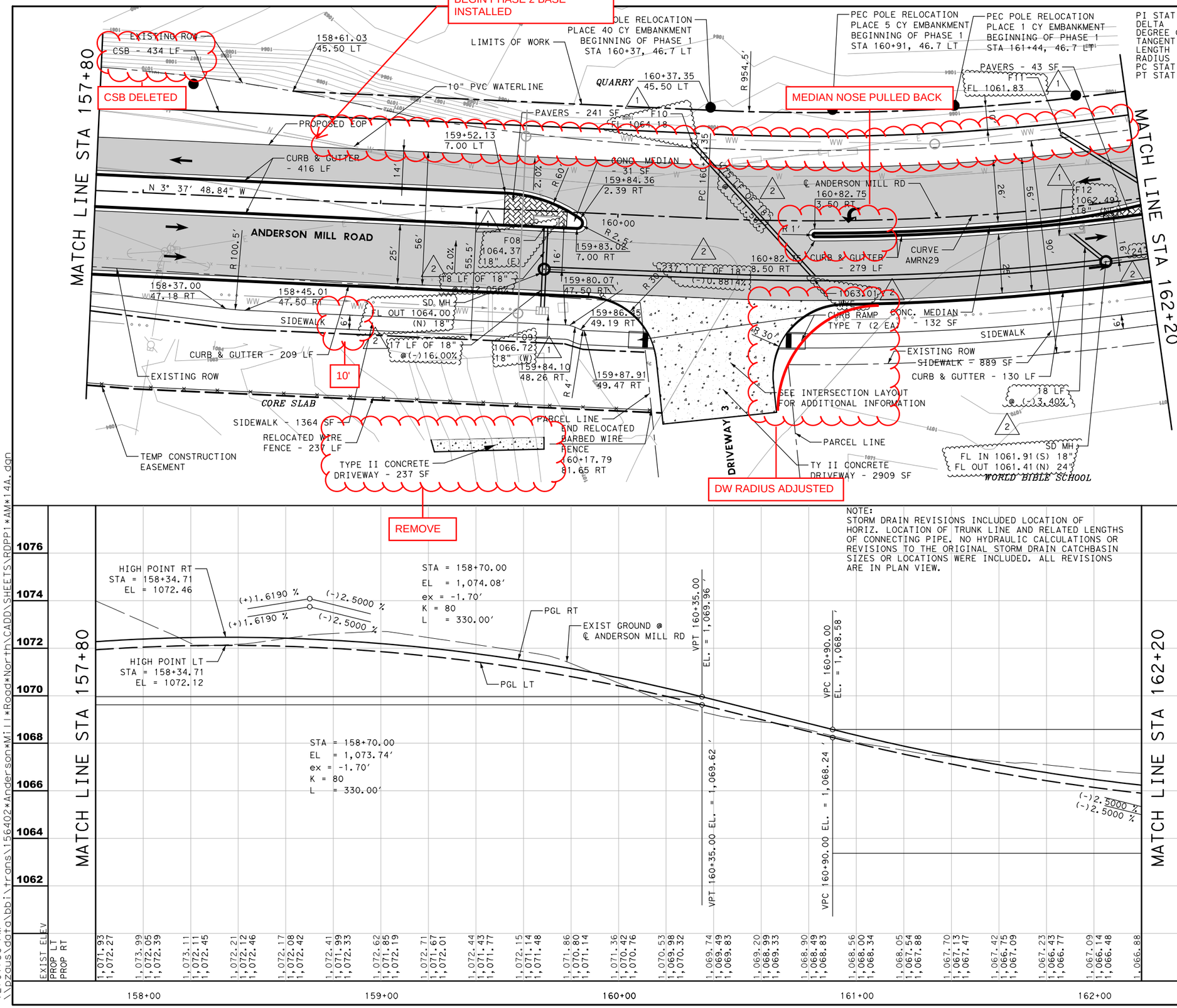

PI STATION	= 161+35.21
DELTA	= 11° 10' 43.24" (LT)
DEGREE OF CURVE	= 5° 43' 46.48"
TANGENT	= 97.86
LENGTH	= 195.10
RADIUS	= 1,000.00
PC STATION	= 160+37.35
PT STATION	= 162+32.46

0' 10' 20' 40'

LEGEND

- PROPOSED ASPHALT PAVEMENT
- PROPOSED REINFORCED CONCRETE PAVEMENT
- PROPOSED MEDIAN PAVERS
- PROPOSED TRAFFIC FLOW ARROW
- EXISTING TRAFFIC FLOW ARROW
- PROPOSED POWER POLE (BY OTHERS)

NOTES:

1. UNLESS OTHERWISE NOTED, DIMENSIONS AND PAVING POINTS ARE GIVEN TO NOMINAL FACE OF CURB.
2. FOR NEW STORM DRAIN SYSTEM SEE STORM DRAIN PLANS.
3. SEE DRIVEWAY DETAIL SHEET RDIN1_AM_03
4. FOR WATERLINE RELOCATION OR RECONSTRUCTION SEE WATER PLANS.
5. FOR NEW SANITARY SEWER AND FORCE MAIN SEE WASTEWATER PLANS.

1 NOTE:
CONTRACTOR TO MAINTAIN A MINIMUM OF 9' CLEAR BETWEEN OUTSIDE OF WASTEWATER MANHOLE AND OUTSIDE OF 10" WATER LINE (HORIZ.) AND A MINIMUM OF 2' CLEAR (VERT.).

NOTE:
STORM DRAIN REVISIONS INCLUDED LOCATION OF HORIZ. LOCATION OF TRUNK LINE AND RELATED LENGTHS OF CONNECTING PIPE. NO HYDRAULIC CALCULATIONS OR REVISIONS TO THE ORIGINAL STORM DRAIN CATCHBASIN SIZES OR LOCATIONS WERE INCLUDED. ALL REVISIONS ARE IN PLAN VIEW.

NUMBER	DATE	REVISION	APPROVED
1	5/31/17	ADJUSTED STORM DRAIN LOCATION	DRE
2	6/19/17	REVISED STORM DRAIN LOCATION	DRE

STATE OF TEXAS
DENNIS R. ECKER
119381
LICENSED
PROFESSIONAL ENGINEER
10/06/2016

CEDAR PARK

Binkley & Barfield, Inc
consulting engineers
Texas Registration Number F-257

ANDERSON MILL ROAD
GASPAR BEND TO WHITESTONE BLVD
PLAN AND PROFILE
STA 157+80 - STA 162+20

1 OF 3

DESIGN BY:	GCC
DRAWN BY:	DSH
CHECKED BY:	DRE
APPROVED BY:	BDR
PROJECT NO:	156402
DATE:	6/20/2017

SCALE:
HORIZ: 1"=40'
VERT: 1"= 4'

SHEET: 14 OF 18

PAGE: RDPP1_AM_14

6/20/2017
12:07:56 PM
\\bgaus\data\bb\trans\156402*Anderson*Mill*Road*North\CADD\SHEETS\RDPP1*AM*14A.dgn

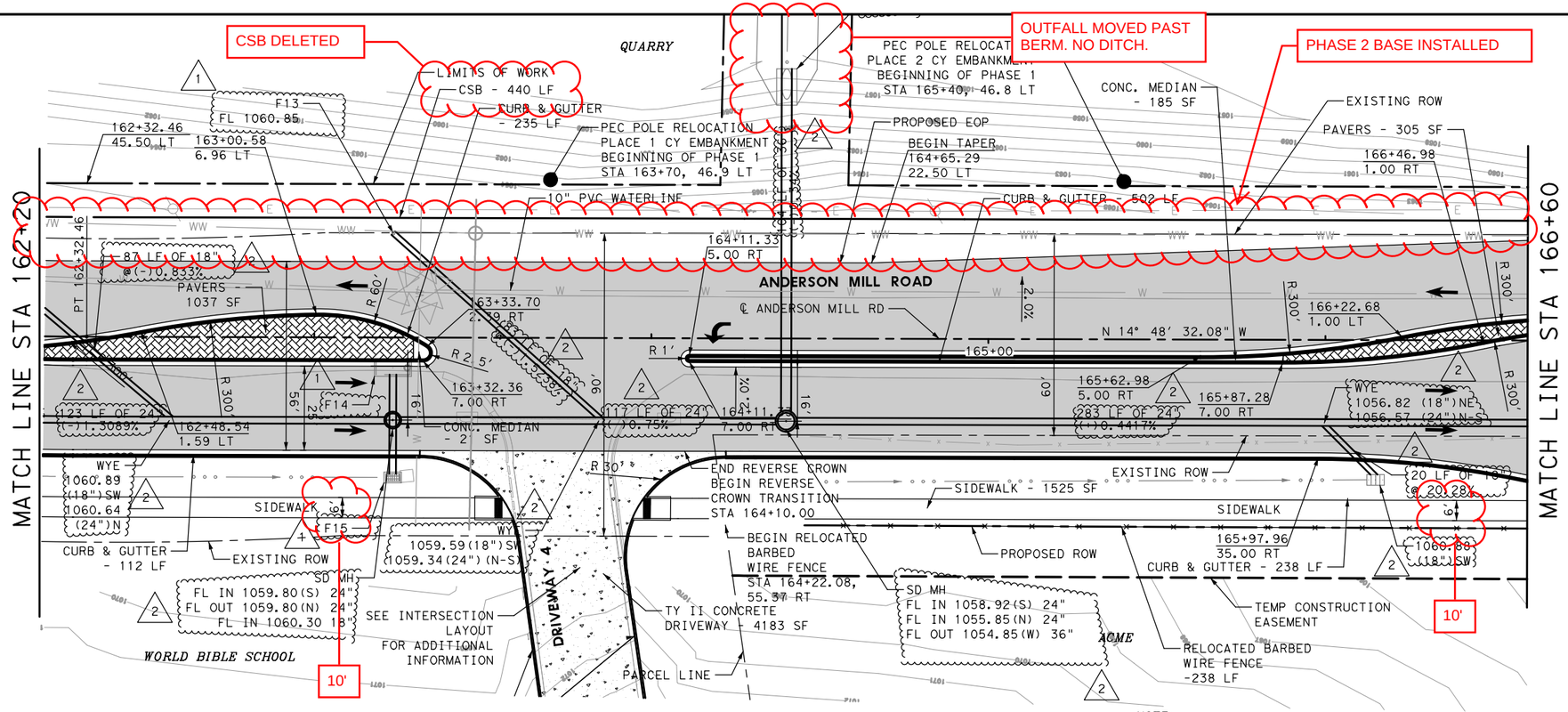

LEGEND

- PROPOSED ASPHALT PAVEMENT
- PROPOSED REINFORCED CONCRETE PAVEMENT
- PROPOSED MEDIAN PAVERS
- PROPOSED TRAFFIC FLOW ARROW
- EXISTING TRAFFIC FLOW ARROW
- PROPOSED POWER POLE (BY OTHERS)

NOTES:

1. UNLESS OTHERWISE NOTED, DIMENSIONS AND PAVING POINTS ARE GIVEN TO NOMINAL FACE OF CURB.
2. FOR NEW STORM DRAIN SYSTEM SEE STORM DRAIN PLANS.
3. SEE DRIVEWAY DETAIL SHEET RDINJ_AM_04
4. FOR WATERLINE RELOCATION OR RECONSTRUCTION SEE WATER PLANS.
5. FOR NEW SANITARY SEWER AND FORCE MAIN SEE WASTEWATER PLANS.

1 NOTE:
CONTRACTOR TO MAINTAIN A MINIMUM OF 9' CLEAR BETWEEN OUTSIDE OF WASTEWATER MANHOLE AND OUTSIDE OF 10" WATER LINE (HORIZ.) AND A MINIMUM OF 2' CLEAR (VERT.).

NOTE:
STORM DRAIN REVISIONS INCLUDED LOCATION OF HORIZ. LOCATION OF TRUNK LINE AND RELATED LENGTHS OF CONNECTING PIPE. NO HYDRAULIC CALCULATIONS OR REVISIONS TO THE ORIGINAL STORM DRAIN CATCHBASIN SIZES OR LOCATIONS WERE INCLUDED. ALL REVISIONS ARE IN PLAN VIEW.

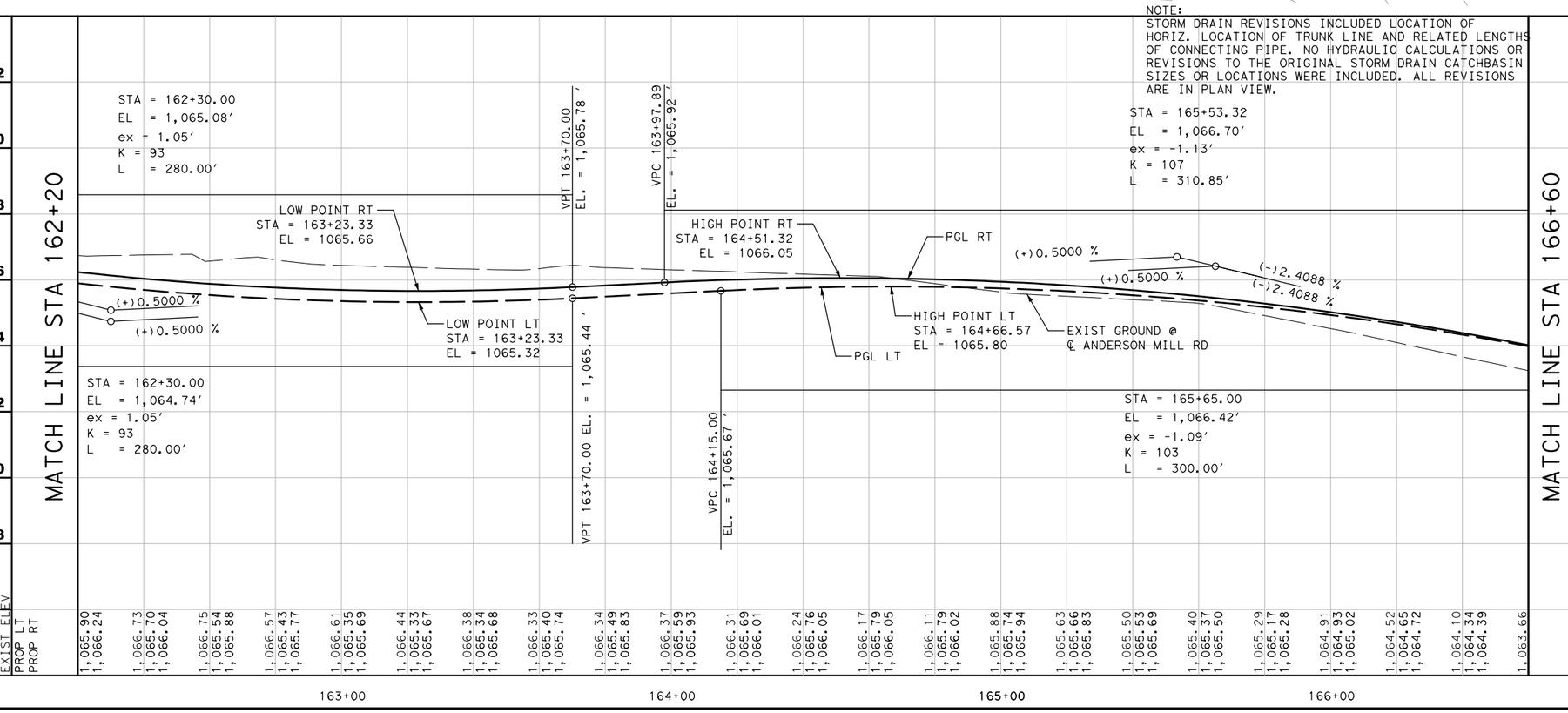

NUMBER	DATE	REVISION	APPROVED
1	5/31/17	ADJUSTED STORM DRAIN LOCATION	DRE
2	6/19/17	REVISED STORM DRAIN LOCATION	DRE

STATE OF TEXAS
DENNIS R. ECKER
119381
LICENSED
PROFESSIONAL ENGINEER
10/06/2016

CEDAR PARK

Binkley & Barfield, Inc
consulting engineers
Texas Registration Number F-257

ANDERSON MILL ROAD
GASPAR BEND TO WHITESTONE BLVD
PLAN AND PROFILE
STA 162+20 - STA 166+60

2 OF 3

DESIGN BY:	GCC
DRAWN BY:	DSH
CHECKED BY:	DRE
APPROVED BY:	BDR
PROJECT NO:	156402
DATE:	6/20/2017

SCALE:
HORIZ: 1"=40'
VERT: 1"= 4'

SHEET: 15 OF 18

PAGE: RDPP1_AM_15

6/20/2017 12:08:00 PM
\\pzgus\data\bbi\trans\156402*Anderson*Mill*Road*North\CADD\SHEETS\RDPP1*AM*15A.dgn

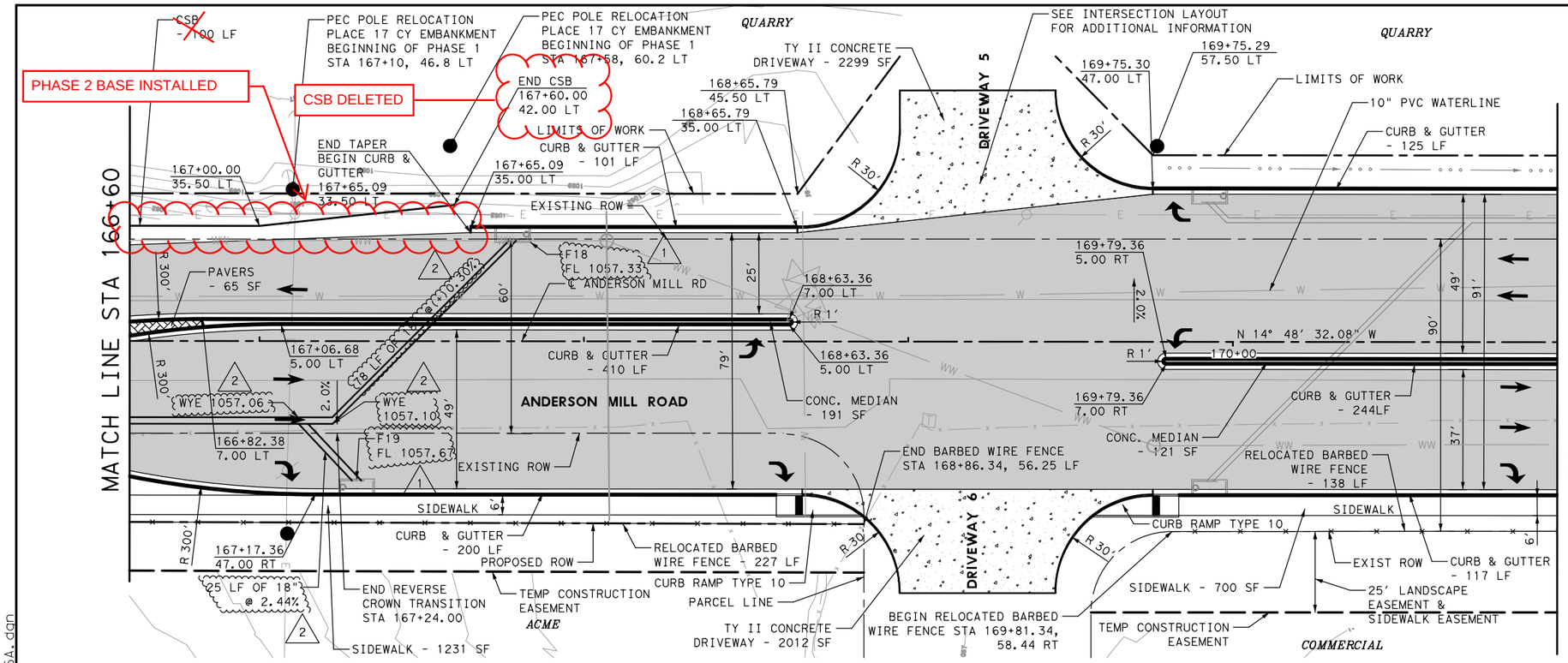

LEGEND

- PROPOSED ASPHALT PAVEMENT
- PROPOSED REINFORCED CONCRETE PAVEMENT
- PROPOSED MEDIAN PAVERS
- PROPOSED TRAFFIC FLOW ARROW
- EXISTING TRAFFIC FLOW ARROW
- PROPOSED POWER POLE (BY OTHERS)

NOTES:

1. UNLESS OTHERWISE NOTED, DIMENSIONS AND PAVING POINTS ARE GIVEN TO NOMINAL FACE OF CURB.
2. FOR NEW STORM DRAIN SYSTEM SEE STORM DRAIN PLANS.
3. SEE DRIVEWAY DETAIL SHEET XX.
4. FOR WATERLINE RELOCATION OR RECONSTRUCTION SEE WATER PLANS.
5. FOR NEW SANITARY SEWER AND FORCE MAIN SEE WASTEWATER PLANS.

NOTE 1:
CONTRACTOR TO MAINTAIN A MINIMUM OF 9' CLEAR BETWEEN OUTSIDE OF WASTEWATER MANHOLE AND OUTSIDE OF 10" WATER LINE (HORIZ.) AND A MINIMUM OF 2' CLEAR (VERT.).

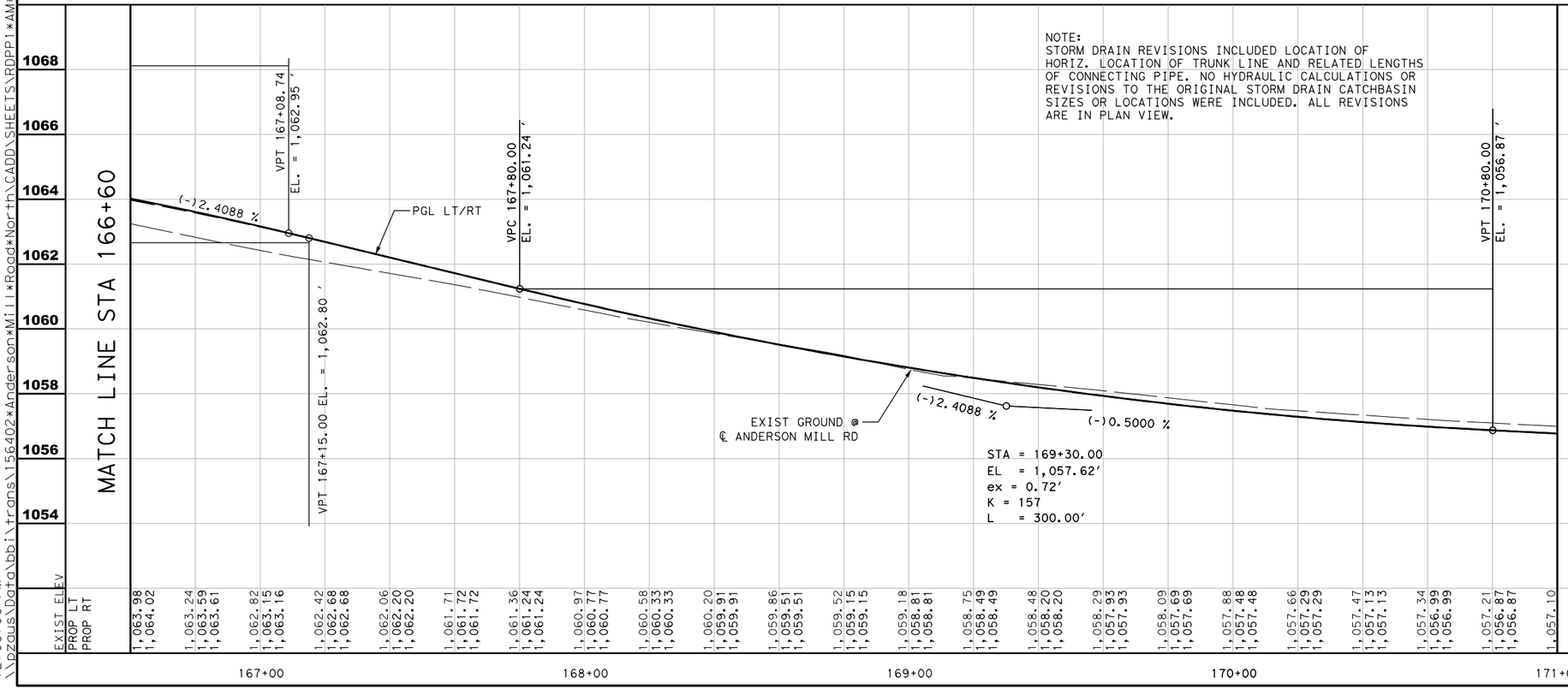

NOTE:
STORM DRAIN REVISIONS INCLUDED LOCATION OF HORIZ. LOCATION OF TRUNK LINE AND RELATED LENGTHS OF CONNECTING PIPE. NO HYDRAULIC CALCULATIONS OR REVISIONS TO THE ORIGINAL STORM DRAIN CATCHBASIN SIZES OR LOCATIONS WERE INCLUDED. ALL REVISIONS ARE IN PLAN VIEW.

NUMBER	DATE	REVISION	APPROVED
1	5/31/17	ADJUSTED STORM DRAIN LOCATION	DRE
2	6/19/17	REVISED STORM DRAIN LOCATION	DRE

STATE OF TEXAS
DENNIS R. ECKER
119381
LICENSED
PROFESSIONAL ENGINEER
10/06/2016

CEDAR PARK

Binkley & Barfield, Inc
consulting engineers
Texas Registration Number F-257

ANDERSON MILL ROAD
GASPAR BEND TO WHITESTONE BLVD
PLAN AND PROFILE
STA 166+60 - STA 171+00

3 OF 3

DESIGN BY: GCC
DRAWN BY: DSH
CHECKED BY: DRE
APPROVED BY: BDR
PROJECT NO: 156402
DATE: 6/20/2017

SCALE:
HORIZ: 1"=40'
VERT: 1"= 4'

SHEET: 16 OF 18

PAGE: RDPP1_AM_16

6/20/2017
12:08:06 PM
\\bgaus\Data\bb\trans\156402*Anderson*Mill*Road*North\CADD\SHEETS\RDPP1*AM*16A.dgn

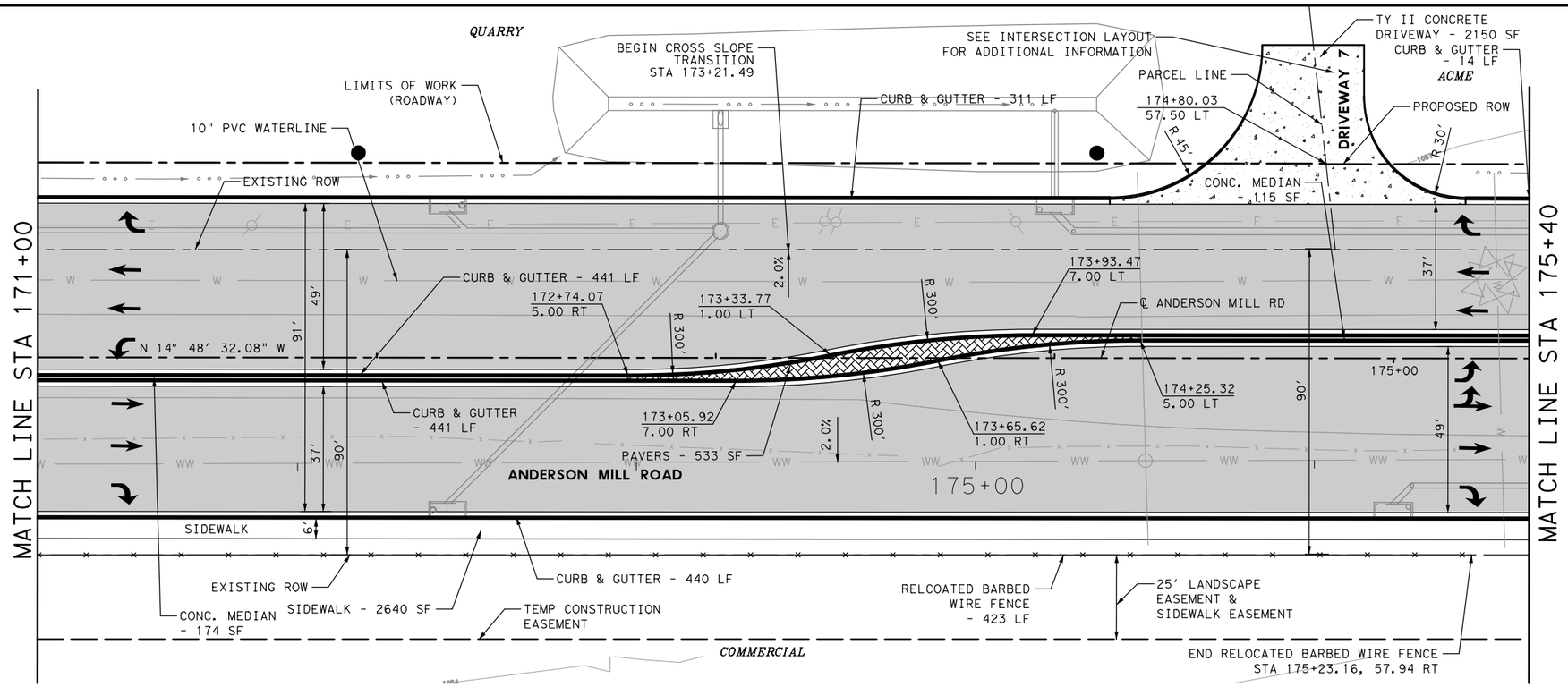

0' 10' 20' 40'

LEGEND

- PROPOSED ASPHALT PAVEMENT
- PROPOSED REINFORCED CONCRETE PAVEMENT
- PROPOSED MEDIAN PAVERS
- PROPOSED TRAFFIC FLOW ARROW
- EXISTING TRAFFIC FLOW ARROW
- PROPOSED POWER POLE (BY OTHERS)

NOTES:

1. UNLESS OTHERWISE NOTED, DIMENSIONS AND PAVING POINTS ARE GIVEN TO NOMINAL FACE OF CURB.
2. FOR NEW STORM DRAIN SYSTEM SEE STORM DRAIN PLANS.
3. FOR WATERLINE RELOCATION OR RECONSTRUCTION SEE WATER PLANS.
4. FOR NEW SANITARY SEWER AND FORCE MAIN SEE WASTEWATER PLANS.

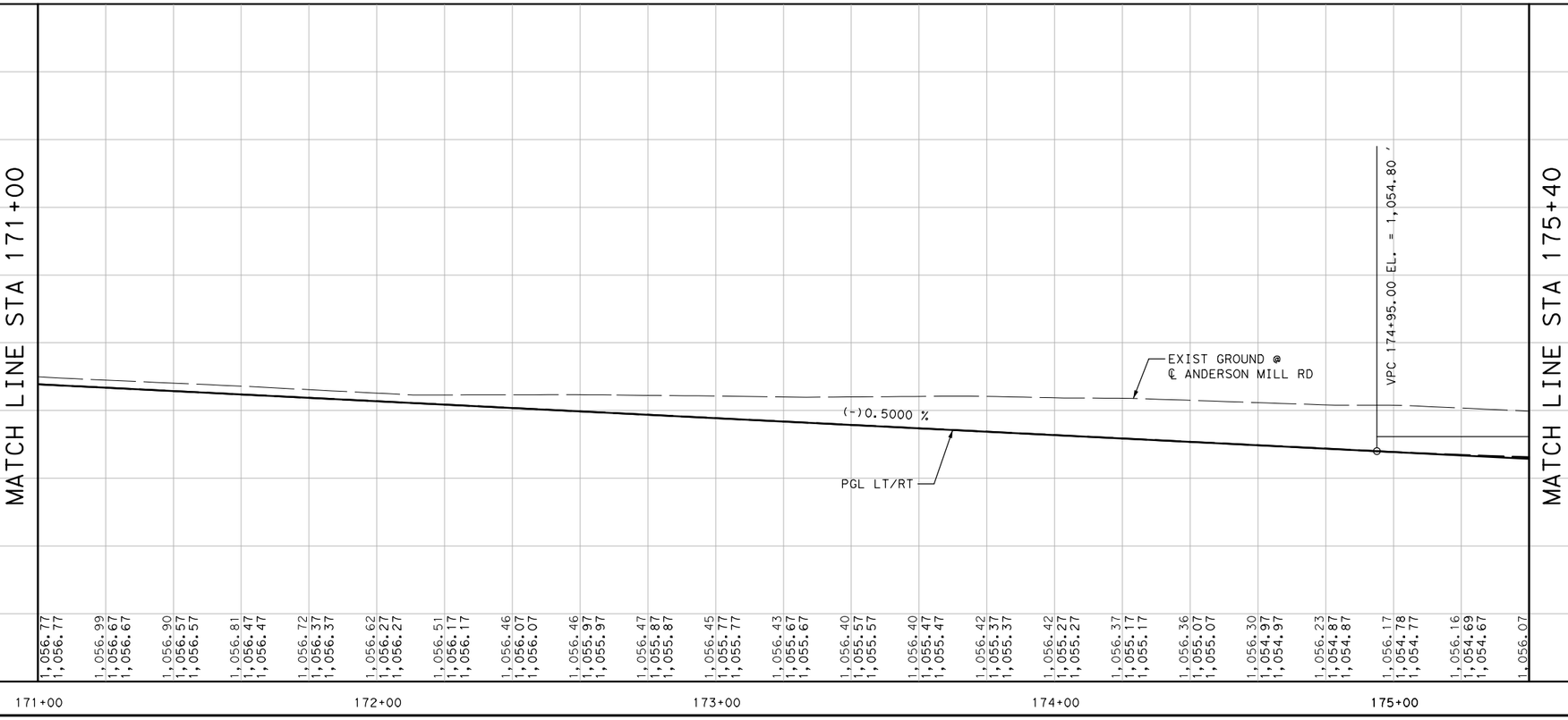

NUMBER	DATE	REVISION	APPROVED

STATE OF TEXAS
GREGORY C. CALKINS
111309
LICENSED
PROFESSIONAL ENGINEER
10/06/2016

CEDAR PARK

Binkley & Barfield, Inc
consulting engineers
Texas Registration Number F-257

ANDERSON MILL ROAD
GASPAR BEND TO WHITESTONE BLVD
PLAN AND PROFILE
STA 171+00 - STA 175+40

DESIGN BY:	GCC	SCALE:	
DRAWN BY:	DSH	HORIZ:	1"=40'
CHECKED BY:	DRE	VERT:	1"= 4'
APPROVED BY:	BDR	SHEET:	17 OF 18
PROJECT NO:	156402		
DATE:	10/6/2016	PAGE:	72

10/6/2016
11:16:54 AM
...\CADD\SHEETS\RDPP1*AM*17.dgn

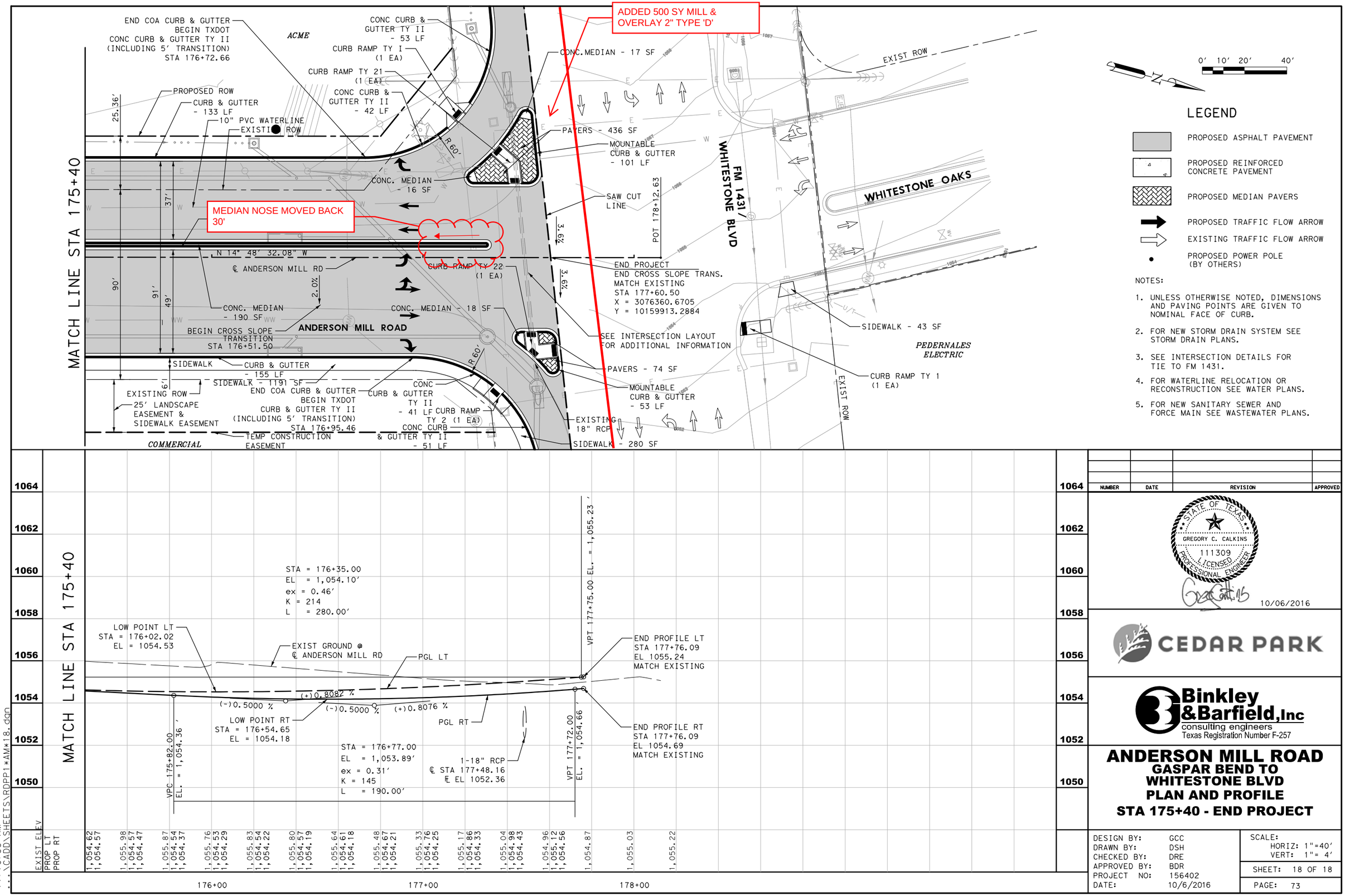

NUMBER	DATE	REVISION	APPROVED

STATE OF TEXAS
GREGORY C. CALKINS
111309
LICENSED PROFESSIONAL ENGINEER
10/06/2016

CEDAR PARK

Binkley & Barfield, Inc
consulting engineers
Texas Registration Number F-257

ANDERSON MILL ROAD
GASPAR BEND TO WHITESTONE BLVD
PLAN AND PROFILE
STA 175+40 - END PROJECT

DESIGN BY:	GCC
DRAWN BY:	DSH
CHECKED BY:	DRE
APPROVED BY:	BDR
PROJECT NO:	156402
DATE:	10/6/2016

SCALE:
HORIZ: 1"=40'
VERT: 1"= 4'

SHEET: 18 OF 18

PAGE: 73

10/6/2016
11:16:55 AM
...\CADD\SHEETS\RDPP1*AM*18.dgn

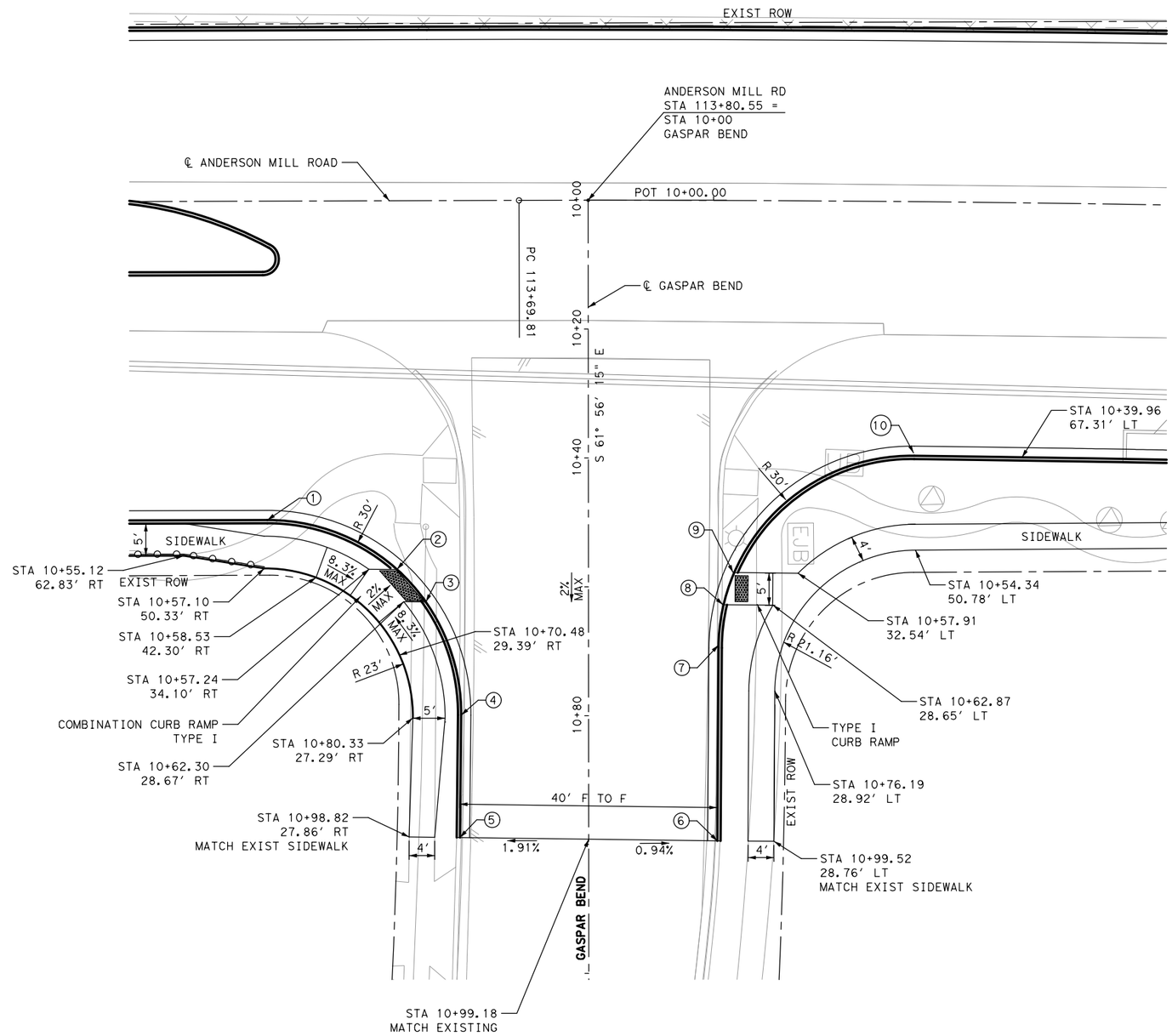

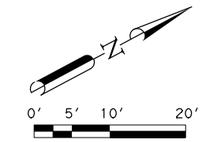

POINT	STATION	OFFSET	ELEVATION
1	10+49.60	49.84' RT	1023.70'
2	10+57.29	29.72' RT	1023.33'
3	10+62.33	25.25' RT	1023.16'
4	10+79.90	19.78' RT	1022.55'
5	10+98.90	19.97' RT	*1021.85'
6	10+99.46	19.97' RT	*1022.04'
7	10+69.05	20.18' LT	1022.87'
8	10+62.79	20.89' LT	1023.03'
9	10+57.81	22.45' LT	1023.12'
10	10+39.26	50.49' LT	1023.36'
*MATCH EXISTING			

NOTES:

1. STATIONS, OFFSETS, AND DIMENSIONS ARE CALLED OUT TO THE FACE OF CURB FROM THE DRIVEWAY ALIGNMENT. ELEVATIONS ARE CALLED TO THE GUTTER FLOW LINE.

2. REFER TO INTERSECTION LAYOUTS PROFILES SHEET FOR DRIVEWAY PROFILE INFORMATION.

3. FOR PAVEMENT MARKING DETAIL SEE SIGNING AND STRIPING PLANS.

NUMBER	DATE	REVISION	APPROVED

STATE OF TEXAS
GREGORY C. CALKINS
111309
LICENSED
PROFESSIONAL ENGINEER
10/06/2016

CEDAR PARK

Binkley & Barfield, Inc
consulting engineers
Texas Registration Number F-257

ANDERSON MILL ROAD
GASPAR BEND TO WHITESTONE BLVD INTERSECTION LAYOUTS

GASPAR BEND

DESIGN BY:	GCC	SCALE: 1"=20'	
DRAWN BY:	DSH		
CHECKED BY:	DRE		
APPROVED BY:	BDR	SHEET: 1 OF 9	
PROJECT NO:	156402		
DATE:	10/6/2016	PAGE: 74	

10/6/2016
8:48:46 AM
...\CADD\SHEETS\RDIN1*AM*01.dgn

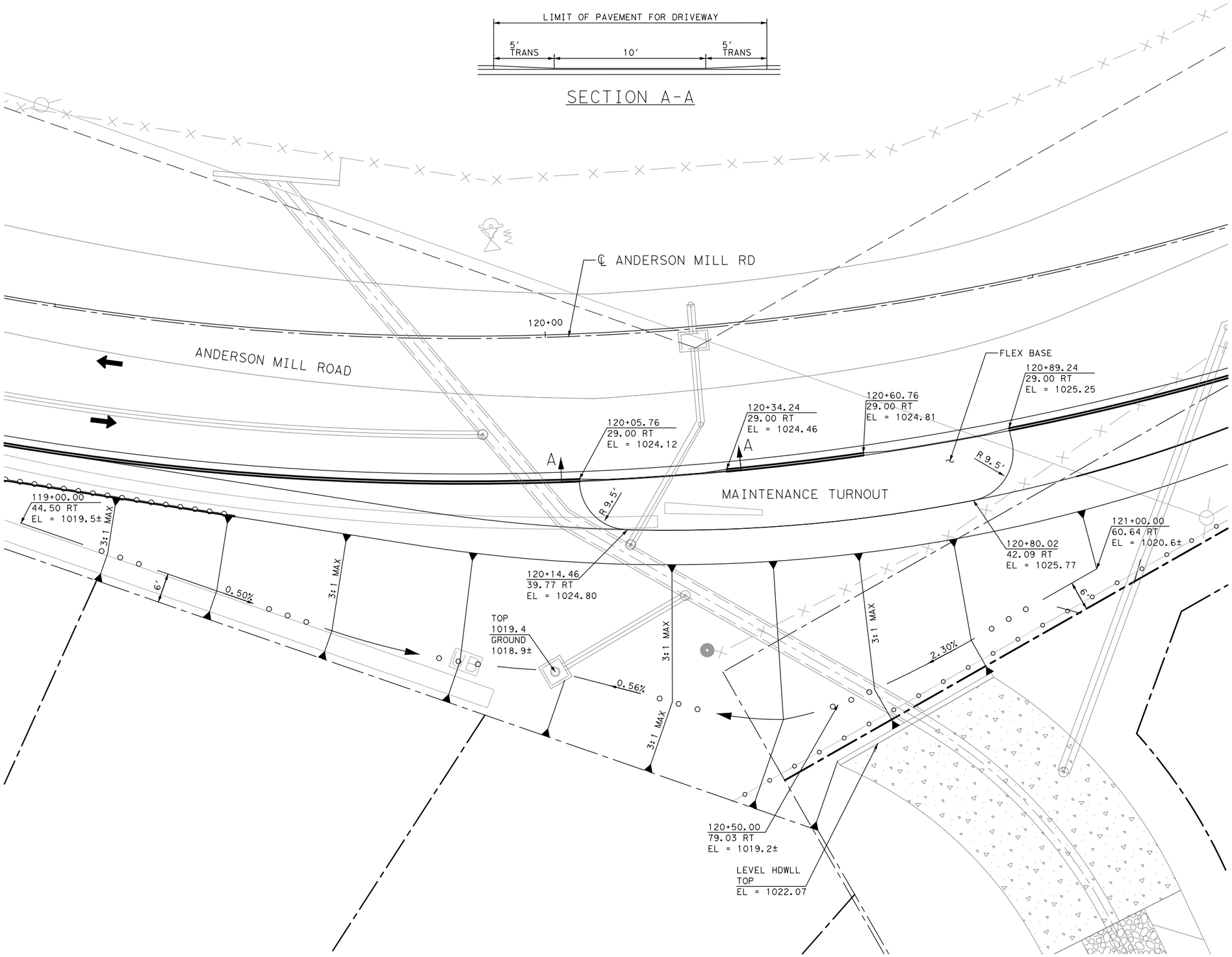

0' 5' 10' 20'

NOTES:

1. STATIONS, OFFSETS, DIMENSIONS, AND ELEVATIONS ARE CALLED OUT TO THE FACE OF CURB FROM THE ANDERSON MILL RD ALIGNMENT.

NUMBER	DATE	REVISION	APPROVED

STATE OF TEXAS
GREGORY C. CALKINS
111309
LICENSED
PROFESSIONAL ENGINEER
10/06/2016

CEDAR PARK

Binkley & Barfield, Inc
consulting engineers
Texas Registration Number F-257

ANDERSON MILL ROAD
GASPAR BEND TO WHITESTONE BLVD
INTERSECTION LAYOUTS MAINTENANCE TURNOUT & GRADING

DESIGN BY:	GCC	SCALE: 1"=20'	
DRAWN BY:	DSH		
CHECKED BY:	DRE	SHEET: 2 OF 9	
APPROVED BY:	BDR		
PROJECT NO:	156402	PAGE: 75	
DATE:	10/6/2016		

10/6/2016
8:48:47 AM
...\CADD\SHEETS\RDIN1*AM*10.dgn

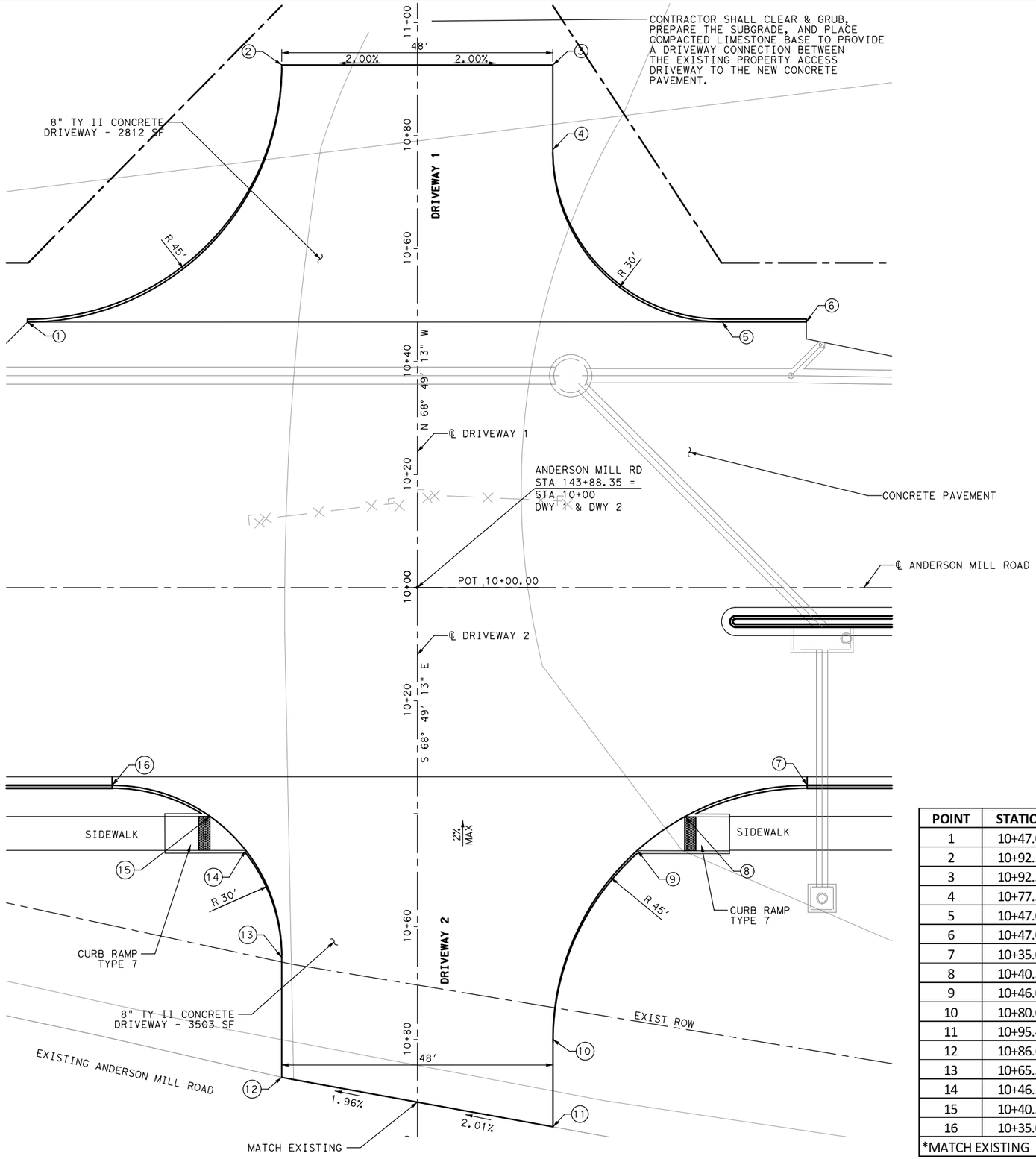

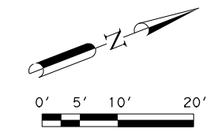

NOTES:

1. STATIONS, OFFSETS, AND DIMENSIONS ARE CALLED OUT TO THE FACE OF CURB FROM THE DRIVEWAY ALIGNMENT. ELEVATIONS ARE CALLED TO THE GUTTER FLOW LINE.

2. REFER TO INTERSECTION LAYOUTS PROFILES SHEET FOR DRIVEWAY PROFILE INFORMATION.

3. FOR PAVEMENT MARKING DETAIL SEE SIGNING AND STRIPING PLANS.

POINT	STATION	OFFSET	ELEVATION
1	10+47.00	69.00' LT	1047.94'
2	10+92.50	24.00' LT	1044.86'
3	10+92.50	24.00' RT	1044.86'
4	10+77.50	24.00' RT	1046.35
5	10+47.00	54.00' RT	1049.86'
6	10+47.00	68.86' RT	1050.10'
7	10+35.00	69.00' LT	1051.74'
8	10+40.50	47.44' LT	1051.52'
9	10+46.00	38.95' LT	1051.52'
10	10+80.00	24.00' LT	1052.92'
11	10+95.46	24.00' LT	*1053.49'
12	10+86.68	24.00' RT	*1052.52'
13	10+65.50	24.00' RT	1051.33'
14	10+46.50	30.38' RT	1050.34'
15	10+40.50	36.69' RT	1050.13'
16	10+35.00	54.00' RT	1049.75'
*MATCH EXISTING			

NUMBER	DATE	REVISION	APPROVED

STATE OF TEXAS
GREGORY C. CALKINS
111309
LICENSED
PROFESSIONAL ENGINEER
10/06/2016

CEDAR PARK

Binkley & Barfield, Inc
consulting engineers
Texas Registration Number F-257

ANDERSON MILL ROAD
GASPAR BEND TO WHITESTONE BLVD
INTERSECTION LAYOUTS
DRIVEWAY 1 AND 2

DESIGN BY: GCC
DRAWN BY: DSH
CHECKED BY: DRE
APPROVED BY: BDR
PROJECT NO: 156402
DATE: 10/6/2016

SCALE: 1"=20'

SHEET: 3 OF 9

PAGE: 76

10/6/2016
8:48:48 AM
...\CADD\SHEETS\RDIN1*AM*02.dgn

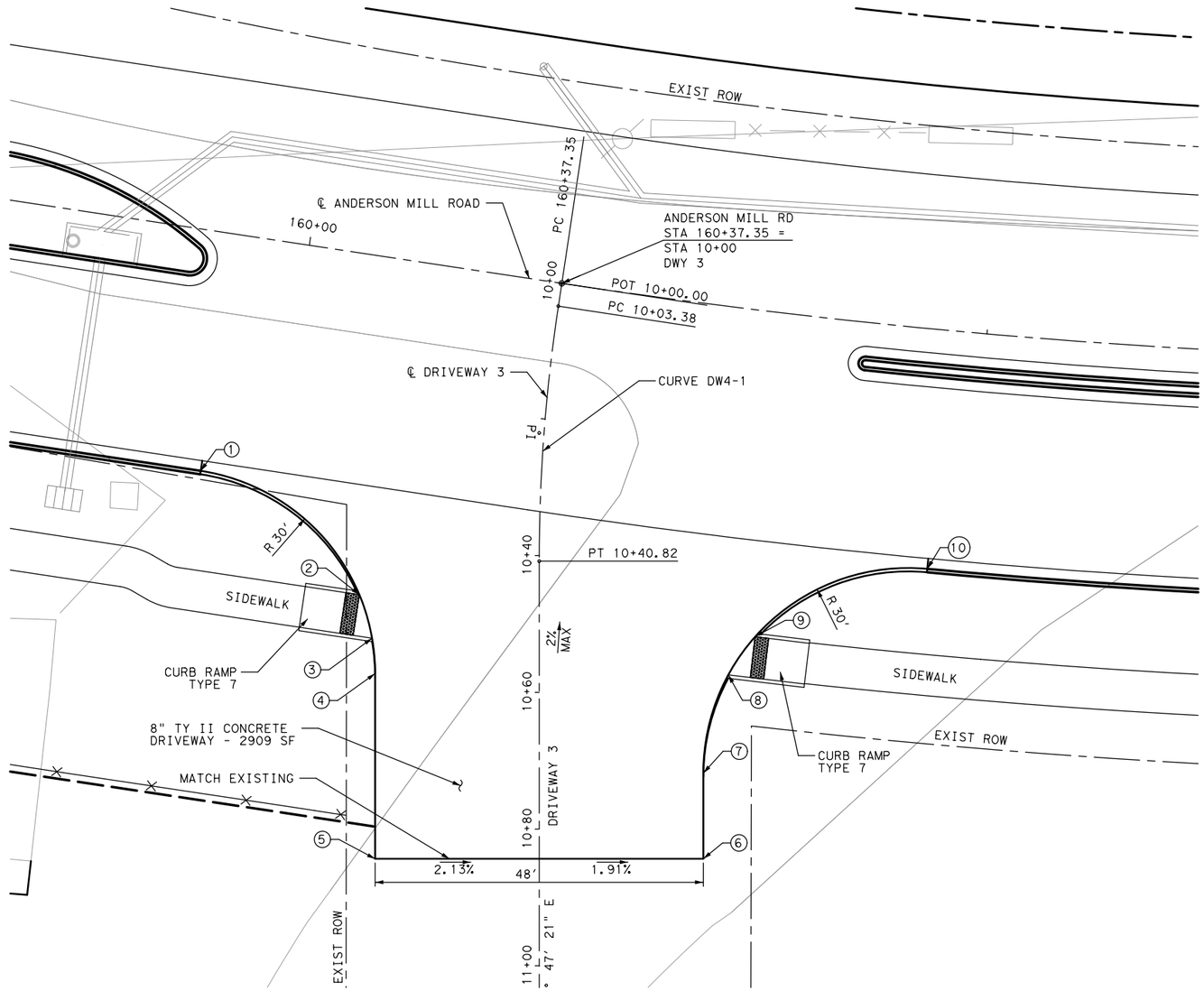

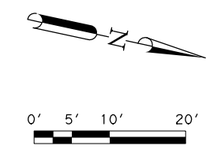

POINT	STATION	OFFSET	ELEVATION
1	10+29.79	49.82' RT	1071.50'
2	10+45.74	26.30' RT	1071.22'
3	10+52.08	24.45' RT	1071.30'
4	10+57.27	24.00' RT	1071.46'
5	10+84.36	24.00' RT	*1072.73'
6	10+84.36	24.00' LT	*1071.76'
7	10+71.81	24.00' LT	1071.12'
8	10+57.45	27.66' LT	1070.32'
9	10+51.87	31.58' LT	1070.03'
10	10+41.93	56.77' LT	1069.21'
*MATCH EXISTING			

NOTES:

1. STATIONS, OFFSETS, AND DIMENSIONS ARE CALLED OUT TO THE FACE OF CURB FROM THE DRIVEWAY ALIGNMENT. ELEVATIONS ARE CALLED TO THE GUTTER FLOW LINE.

2. REFER TO INTERSECTION LAYOUTS PROFILES SHEET FOR DRIVEWAY PROFILE INFORMATION.

3. FOR PAVEMENT MARKING DETAIL SEE SIGNING AND STRIPING PLANS.

NUMBER	DATE	REVISION	APPROVED

STATE OF TEXAS
GREGORY C. CALKINS
111309
LICENSED
PROFESSIONAL ENGINEER
10/06/2016

CEDAR PARK

Binkley & Barfield, Inc
consulting engineers
Texas Registration Number F-257

ANDERSON MILL ROAD
GASPAR BEND TO WHITESTONE BLVD
INTERSECTION LAYOUTS
DRIVEWAY 3

DESIGN BY: GCC
DRAWN BY: DSH
CHECKED BY: DRE
APPROVED BY: BDR
PROJECT NO: 156402
DATE: 10/6/2016

SCALE: 1"=20'

SHEET: 4 OF 9

PAGE: 77

10/6/2016
8:48:54 AM
...\CADD\SHEETS\RDIN1*AM*03.dgn

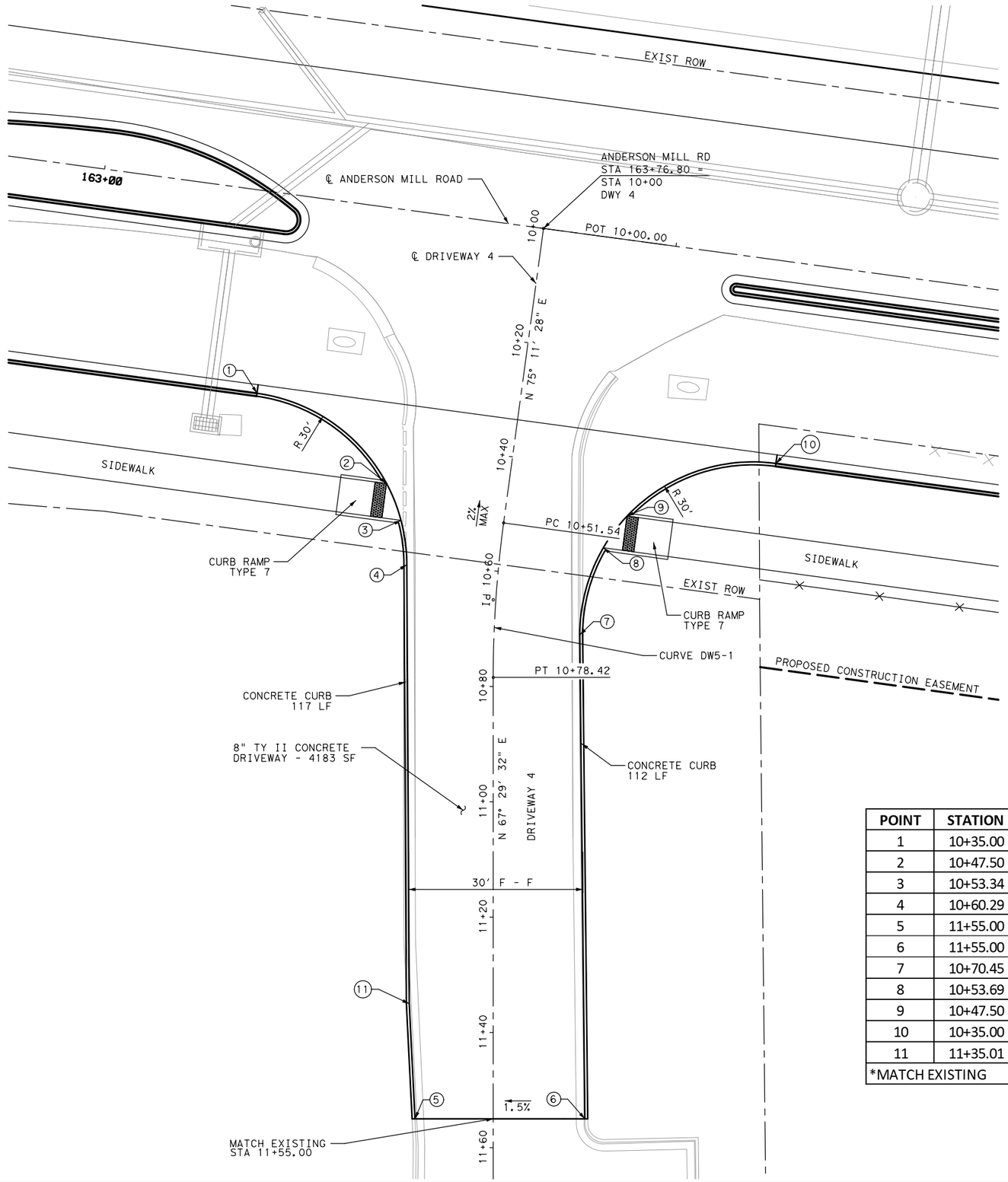

0' 5' 10' 20'

NOTES:

1. STATIONS, OFFSETS, AND DIMENSIONS ARE CALLED OUT TO THE FACE OF CURB FROM THE DRIVEWAY ALIGNMENT. ELEVATIONS ARE CALLED TO THE GUTTER FLOW LINE.

2. REFER TO INTERSECTION LAYOUTS PROFILES SHEET FOR DRIVEWAY PROFILE INFORMATION.

3. FOR PAVEMENT MARKING DETAIL SEE SIGNING AND STRIPING PLANS.

POINT	STATION	OFFSET	ELEVATION
1	10+35.00	45.41' RT	1066.20'
2	10+47.50	21.04' RT	1066.92
3	10+53.34	17.71' RT	1067.04
4	10+60.29	15.89' RT	1067.36'
5	11+55.00	13.56' RT	*1076.13'
6	11+55.00	15.88' LT	*1076.63'
7	10+70.45	14.85' LT	1068.65'
8	10+53.69	17.69' LT	1067.31'
9	10+47.50	21.04' LT	1067.18'
10	10+35.00	45.41' LT	1066.51'
11	11+35.01	14.57' RT	1074.09'
*MATCH EXISTING			

NUMBER	DATE	REVISION	APPROVED

STATE OF TEXAS
GREGORY C. CALKINS
111309
LICENSED
PROFESSIONAL ENGINEER
10/06/2016

CEDAR PARK

Binkley & Barfield, Inc
consulting engineers
Texas Registration Number F-257

ANDERSON MILL ROAD
GASPAR BEND TO WHITESTONE BLVD
INTERSECTION LAYOUTS
DRIVEWAY 4

DESIGN BY: GCC
DRAWN BY: DSH
CHECKED BY: DRE
APPROVED BY: BDR
PROJECT NO: 156402
DATE: 10/6/2016

SCALE: 1"=20'

SHEET: 5 OF 9

PAGE: 78

10/6/2016
8:48:55 AM
...\CADD\SHEETS\RDIN1*AM*04.dgn

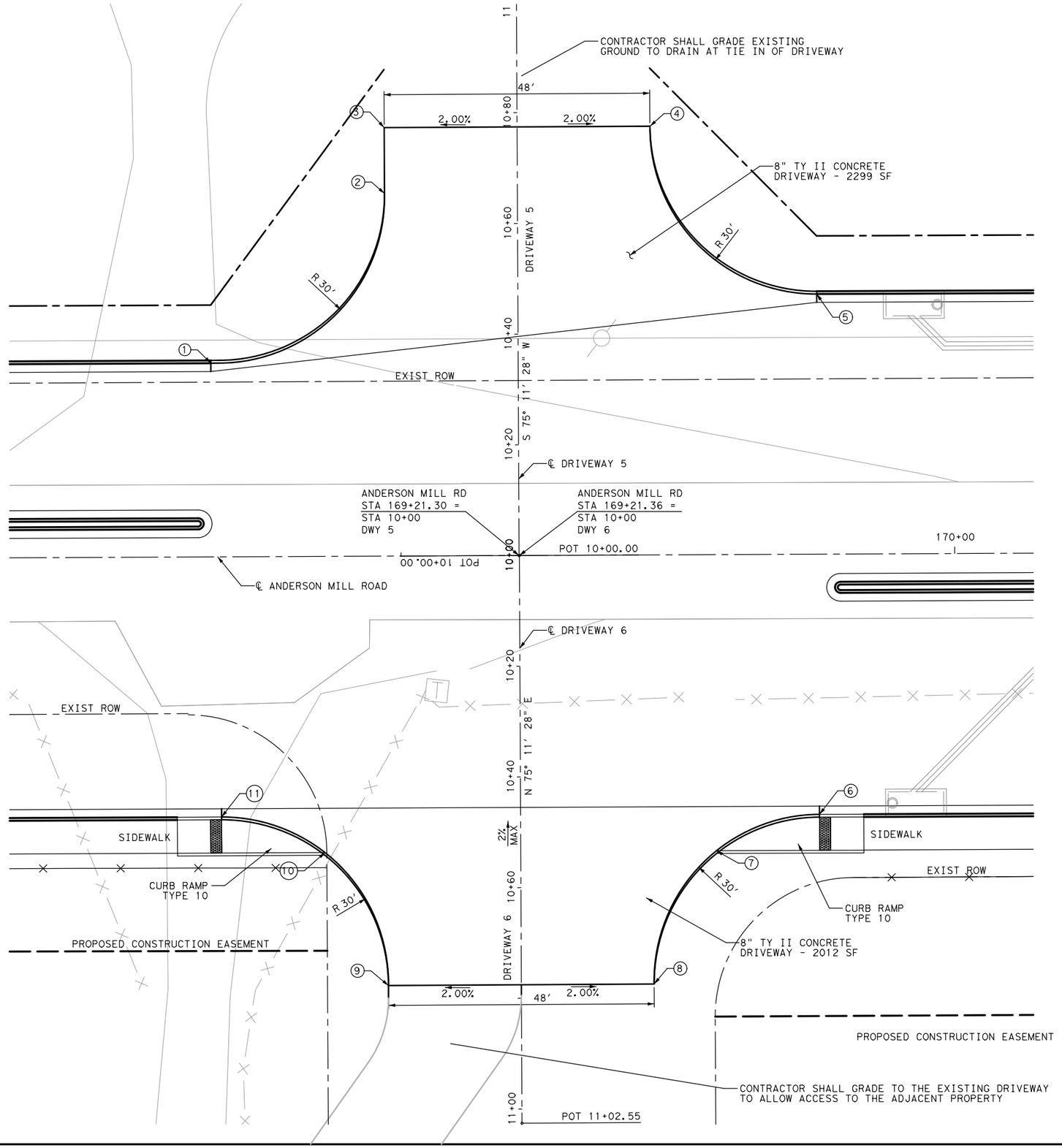

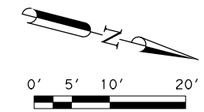

POINT	STATION	OFFSET	ELEVATION
1	10+35.00	55.51' LT	1058.88'
2	10+65.52	23.99' LT	1057.36'
3	10+77.40	24.00' LT	1057.04'
4	10+77.46	24.00' RT	1057.04'
5	10+47.00	54.00' RT	1056.98'
6	10+47.00	54.00' LT	1056.98'
7	10+53.50	35.35' LT	1057.05'
8	10+77.53	24.00' LT	1056.61'
9	10+77.57	24.00' RT	1056.61'
10	10+53.50	35.35' RT	1057.89'
11	10+47.00	54.00' RT	1058.61'
*MATCH EXISTING			

NOTES:

1. STATIONS, OFFSETS, AND DIMENSIONS ARE CALLED OUT TO THE FACE OF CURB FROM THE DRIVEWAY ALIGNMENT. ELEVATIONS ARE CALLED TO THE GUTTER FLOW LINE.

2. REFER TO INTERSECTION LAYOUTS PROFILES SHEET FOR DRIVEWAY PROFILE INFORMATION.

3. FOR PAVEMENT MARKING DETAIL SEE SIGNING AND STRIPING PLANS.

NUMBER	DATE	REVISION	APPROVED

STATE OF TEXAS
GREGORY C. CALKINS
111309
LICENSED
PROFESSIONAL ENGINEER
10/06/2016

CEDAR PARK

Binkley & Barfield, Inc
consulting engineers
Texas Registration Number F-257

ANDERSON MILL ROAD
GASPAR BEND TO WHITESTONE BLVD INTERSECTION LAYOUTS
DRIVEWAYS 5 & 6

DESIGN BY: GCC
DRAWN BY: DSH
CHECKED BY: DRE
APPROVED BY: BDR
PROJECT NO: 156402
DATE: 10/6/2016

SCALE: 1"=20'

SHEET: 6 OF 9

PAGE: 79

10/6/2016
8:49:01 AM
...\CADD\SHEETS\RDIN1*AM*05.dgn

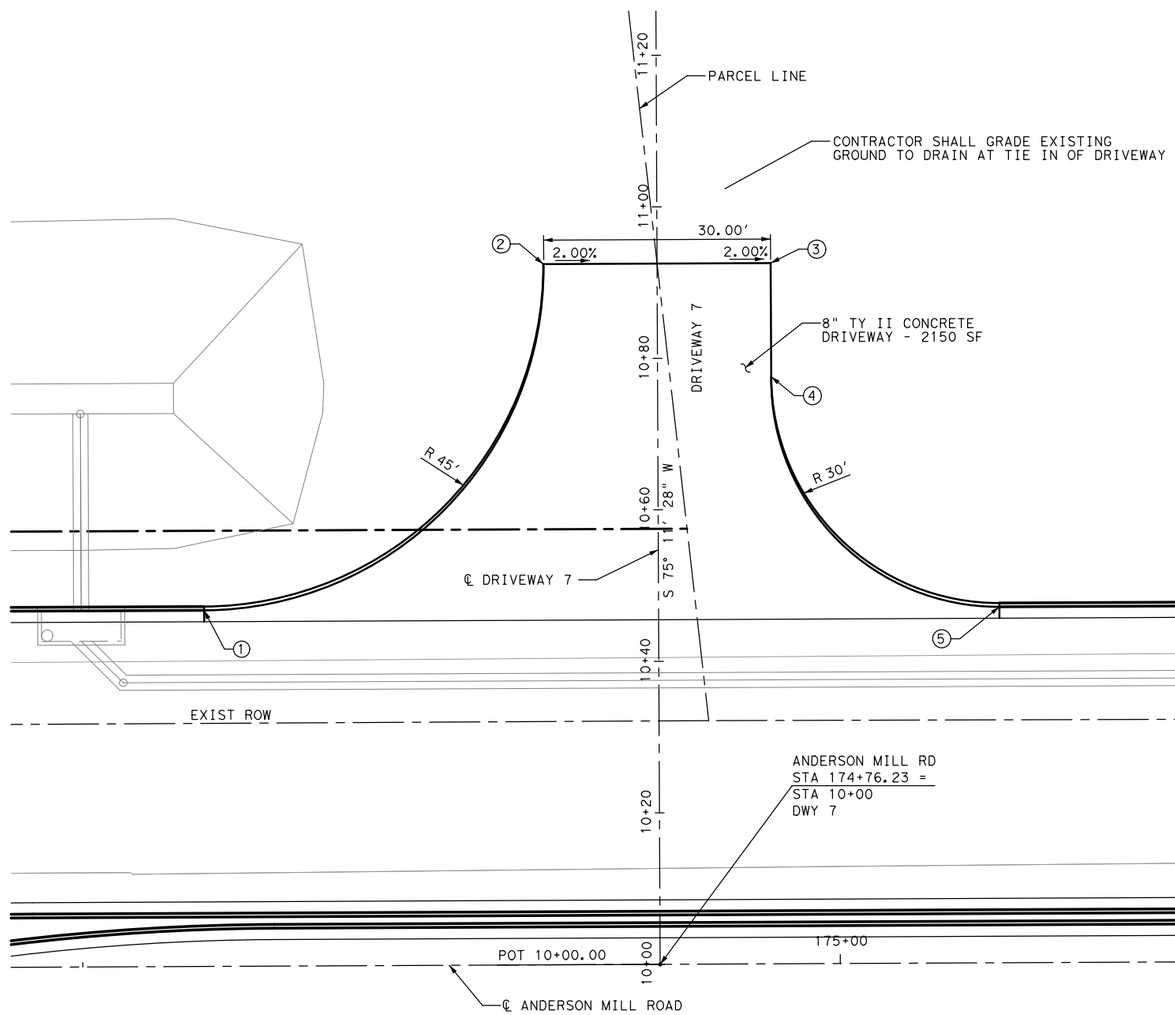

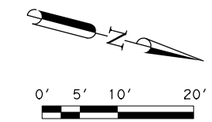

POINT	STATION	OFFSET	ELEVATION
1	10+47.00	60.00' LT	1054.90'
2	10+92.50	15.00' LT	1058.64'
3	10+92.50	15.00' RT	1058.04'
4	10+77.50	15.00' RT	1056.98'
5	10+47.00	45.00' RT	1054.90'

NOTES:

1. STATIONS, OFFSETS, AND DIMENSIONS ARE CALLED OUT TO THE FACE OF CURB FROM THE DRIVEWAY ALIGNMENT. ELEVATIONS ARE CALLED TO THE GUTTER FLOW LINE.

2. REFER TO INTERSECTION LAYOUTS PROFILES SHEET FOR DRIVEWAY PROFILE INFORMATION.

3. FOR PAVEMENT MARKING DETAIL SEE SIGNING AND STRIPING PLANS.

NUMBER	DATE	REVISION	APPROVED

STATE OF TEXAS
GREGORY C. CALKINS
111309
LICENSED
PROFESSIONAL ENGINEER
10/06/2016

CEDAR PARK

Binkley & Barfield, Inc
consulting engineers
Texas Registration Number F-257

ANDERSON MILL ROAD
GASPAR BEND TO WHITESTONE BLVD
INTERSECTION LAYOUTS

DRIVEWAYS 7

DESIGN BY:	GCC	SCALE:	1"=20'
DRAWN BY:	DSH		
CHECKED BY:	DRE	SHEET:	7 OF 9
APPROVED BY:	BDR		
PROJECT NO:	156402	PAGE:	80
DATE:	10/6/2016		

10/6/2016
8:49:05 AM
...\CADD\SHEETS\RDIN1*AM*06.dgn

POINT	STATION	OFFSET	ELEVATION
1	177+41.99	172.11' LT	*1061.11'
2	177+31.27	123.30' LT	1058.33'
3	177+19.30	69.15' LT	1056.69'
4	177+15.29	64.69' LT	1056.57'
5	176+72.66	47.00' LT	1055.60'
6	177+46.13	68.38' LT	1057.06'
7	177+36.38	53.73' LT	1056.41'
8	177+32.32	49.30' LT	1056.28'
9	177+24.00	35.00' LT	1055.71'
10	177+40.64	35.00' LT	1055.87'
11	177+46.68	35.00' LT	1055.93'
12	177+49.65	35.00' LT	1055.96'
13	177+30.92	6.00' LT	1054.84'
14	177+46.79	35.00' RT	1053.57'
15	177+48.17	35.00' RT	1053.58'
16	177+54.20	35.00' RT	1053.60'
17	177+58.26	35.00' RT	1053.61'
18	177+59.24	53.89' RT	1052.93'
19	177+53.84	48.00' RT	1053.15'
20	177+49.10	43.66' RT	1053.28'
21	176.95.46	47.00' RT	1053.22'
22	177+33.29	60.43' RT	1052.72'
23	177+37.76	64.45' RT	1052.59'
24	177+56.18	110.59' RT	1050.93'
25	177+77.28	156.11' RT	*1049.25'
*MATCH EXISTING			

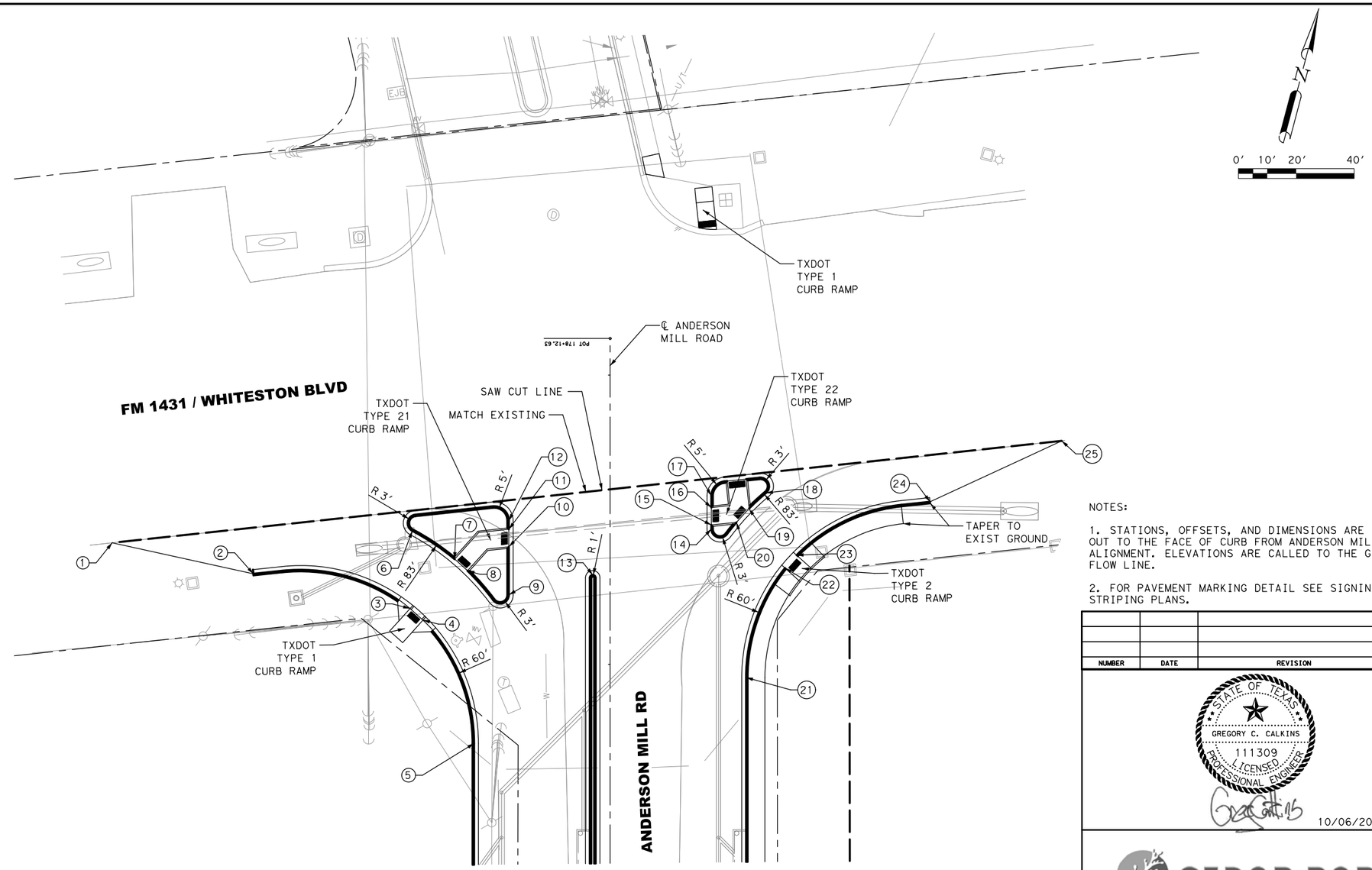

NOTES:

1. STATIONS, OFFSETS, AND DIMENSIONS ARE CALLED OUT TO THE FACE OF CURB FROM ANDERSON MILL ROAD ALIGNMENT. ELEVATIONS ARE CALLED TO THE GUTTER FLOW LINE.

2. FOR PAVEMENT MARKING DETAIL SEE SIGNING AND STRIPING PLANS.

NUMBER	DATE	REVISION	APPROVED

STATE OF TEXAS
GREGORY C. CALKINS
111309
LICENSED
PROFESSIONAL ENGINEER
10/06/2016

CEDAR PARK

Binkley & Barfield, Inc
consulting engineers
Texas Registration Number F-257

ANDERSON MILL ROAD
GASPAR BEND TO WHITESTONE BLVD
INTERSECTION LAYOUTS

FM 1431

DESIGN BY:	GCC	SCALE:	1"=40'
DRAWN BY:	DSH		
CHECKED BY:	DRE	SHEET:	8 OF 9
APPROVED BY:	BDR		
PROJECT NO:	156402	PAGE:	81
DATE:	10/6/2016		

10/6/2016
8:49:10 AM
...\CADD\SHEETS\RDIN1*AM*07.dgn

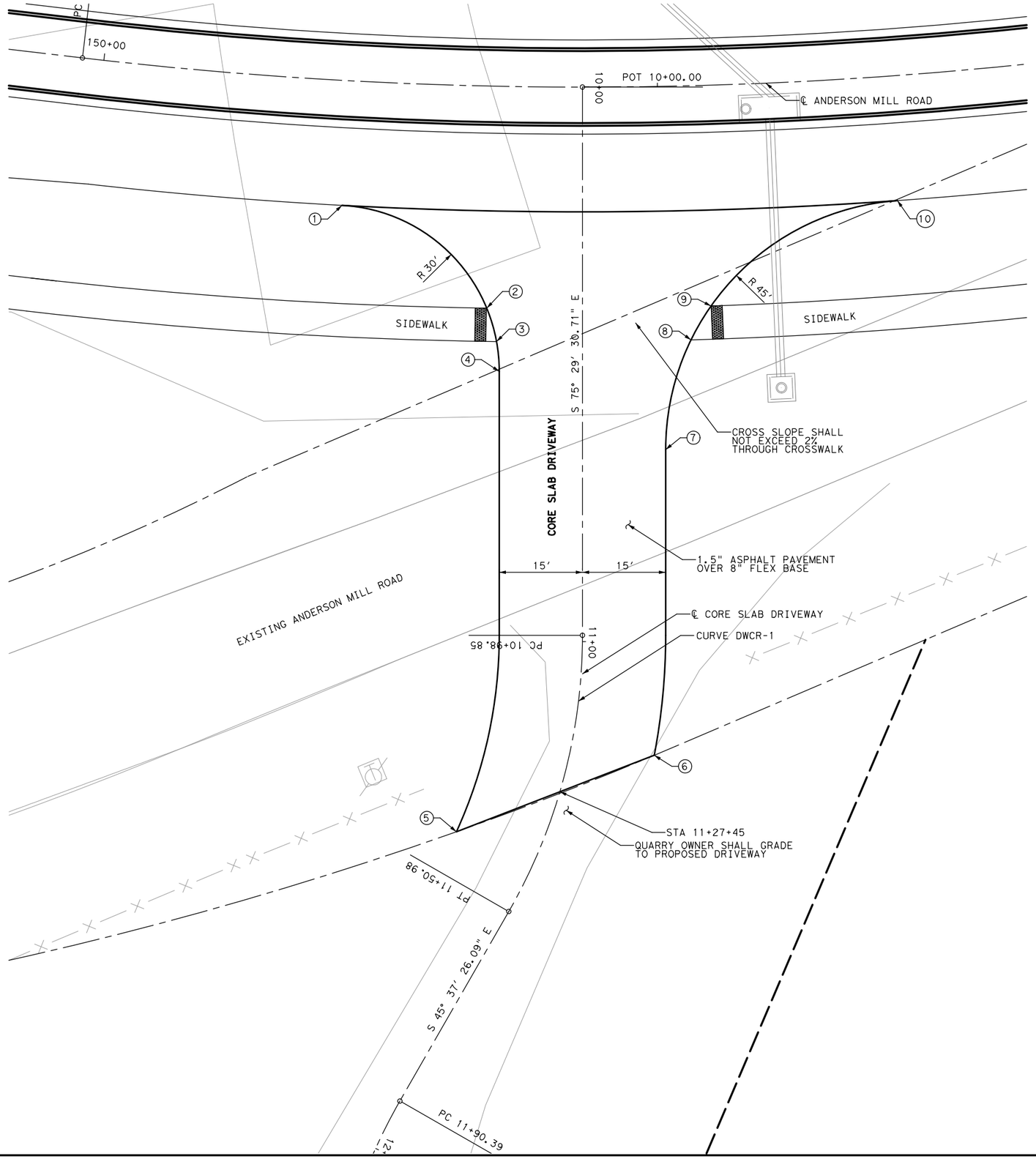

POINT	STATION	OFFSET	ELEVATION
1	10+21.32	43.37' RT	1060.99'
2	10+39.86	17.26' RT	1063.00'
3	10+45.88	15.49' RT	1063.17'
4	10+51.28	15.00' RT	1063.47'
5	11+41.84	15.00' RT	1070.07'
6	11+17.78	15.00' LT	1069.73'
7	10+65.36	15.00' LT	1064.66'
8	10+45.60	19.57' LT	1063.28'
9	10+39.48	23.19' LT	1063.23'
10	10+20.48	56.80' LT	1062.57'

NOTES:

1. STATIONS, OFFSETS, AND DIMENSIONS ARE CALLED OUT TO THE FACE OF CURB FROM THE DRIVEWAY ALIGNMENT.

2. REFER TO INTERSECTION LAYOUTS PROFILES SHEET FOR DRIVEWAY PROFILE INFORMATION.

3. FOR PAVEMENT MARKING DETAIL SEE SIGNING AND STRIPING PLANS.

0' 5' 10' 20'

NUMBER	DATE	REVISION	APPROVED

STATE OF TEXAS
GREGORY C. CALKINS
111309
LICENSED
PROFESSIONAL ENGINEER
10/06/2016

CEDAR PARK

Binkley & Barfield, Inc
consulting engineers
Texas Registration Number F-257

ANDERSON MILL ROAD
GASPAR BEND TO WHITESTONE BLVD
INTERSECTION LAYOUTS
CORE SLAB DRIVEWAY

DESIGN BY:	GCC	SCALE:	1"=20'
DRAWN BY:	DSH		
CHECKED BY:	DRE		
APPROVED BY:	BDR	SHEET:	9 OF 9
PROJECT NO:	156402		
DATE:	10/6/2016	PAGE:	82

10/6/2016
8:49:11 AM
...\CADD\SHEETS\RDIN1*AM*08.dgn

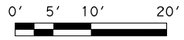

MISCELLANEOUS DRIVEWAYS - DETAIL SUMMARY											
DRIVEWAY LOCATION			W1	W2	S	G	L	R	AREA	DRIVEWAY	DRIVEWAY
SHEET #	STATION	RT/LT	FT	FT	FT	FT	FT	FT	SF	DETAIL	DESCRIPTION
3	112+08.66	RT	12	22	5	5.5	6.8	5	345	COA TEMP DRIVEWAY(433S-3)	PRIVATE DRIVE
3	112+34.31	RT	-	15	-	-	-	-	-	2" TYPE 1 CURB(CCCG-12)	PUE ACCESS
7	129+39.86	LT	16	26.0	0	0	44.8	5*	764	COA TEMP DRIVEWAY(433S-3)	PRIVATE DRIVE
*CHAMFERED RETURNS											

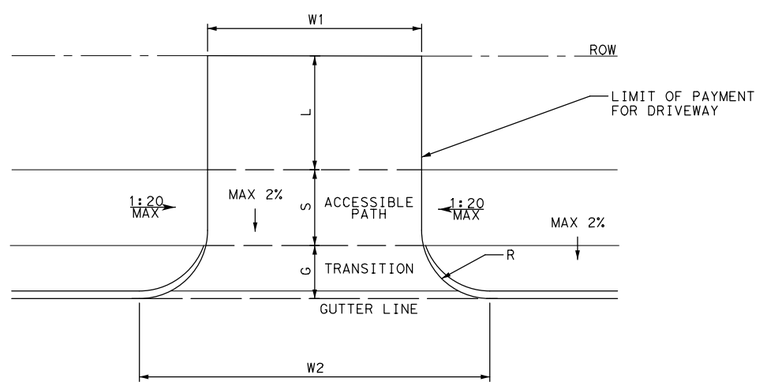

DRIVEWAY DETAIL

NOTES: W1, W2, S, G, L, AND R VALUES ARE GIVEN IN MISCELLANEOUS DRIVEWAYS - DETAIL SUMMARY
REFER TO STANDARD DETAILS FOR ADDITIONAL INFORMATION

NUMBER	DATE	REVISION	APPROVED

STATE OF TEXAS
GREGORY C. CALKINS
111309
LICENSED
PROFESSIONAL ENGINEER
10/06/2016

CEDAR PARK

Binkley & Barfield, Inc
consulting engineers
Texas Registration Number F-257

ANDERSON MILL ROAD
GASPAR BEND TO WHITESTONE BLVD

DRIVEWAY DETAILS

DESIGN BY: GCC
DRAWN BY: DSH
CHECKED BY: DRE
APPROVED BY: BDR
PROJECT NO: 156402
DATE: 10/6/2016

SCALE: NTS

SHEET: 1 OF 1

PAGE: 83

10/6/2016
8:49:18 AM
...\CADD\SHEETS\RDIN1*AM*09.dgn

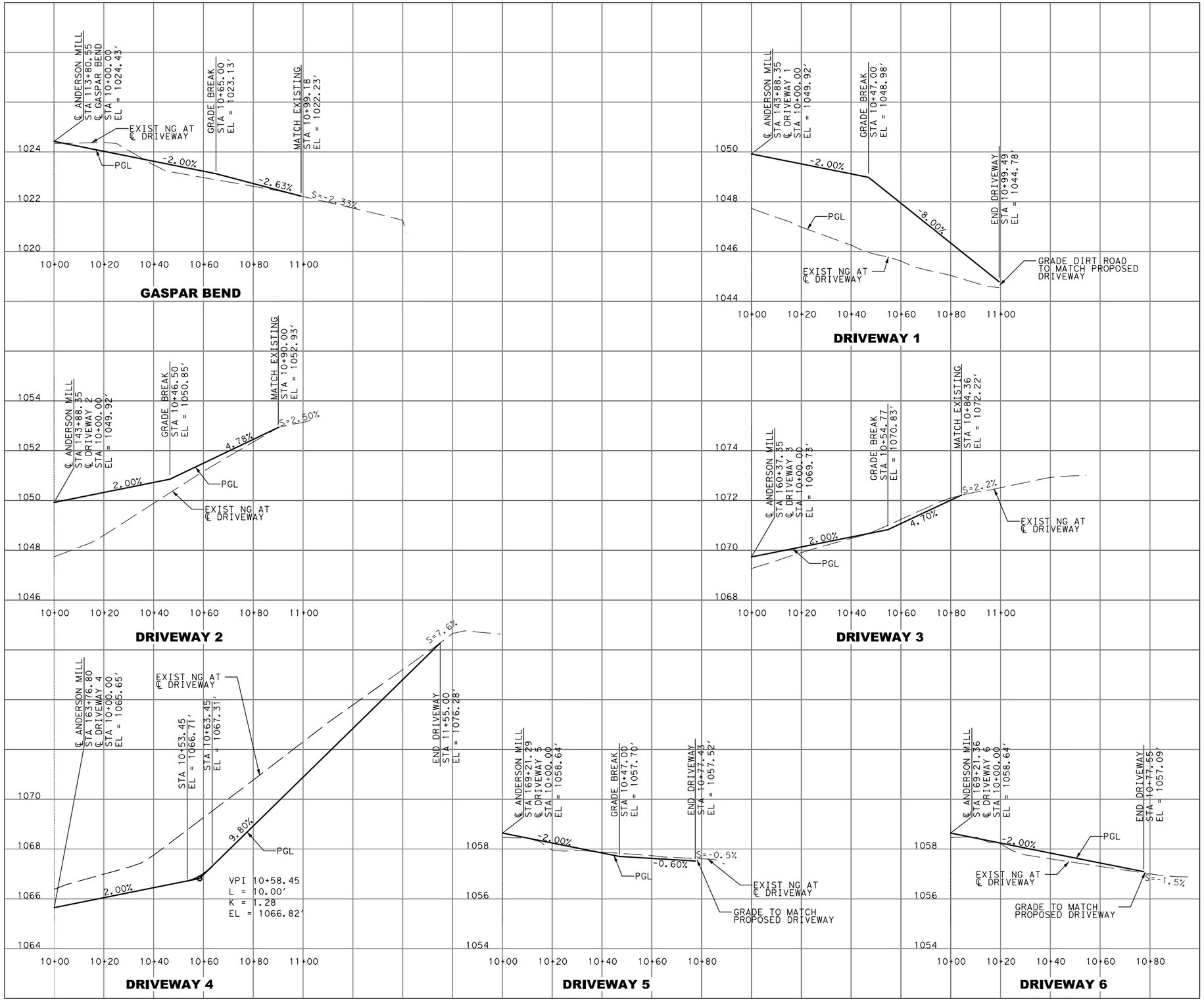

HORZ 0' 10' 20' 40'

NUMBER	DATE	REVISION	APPROVED

STATE OF TEXAS
GREGORY C. CALKINS
111309
LICENSED
PROFESSIONAL ENGINEER

10/06/2016

CEDAR PARK

Binkley & Barfield, Inc
consulting engineers
Texas Registration Number F-257

ANDERSON MILL ROAD
GASPAR BEND TO WHITESTONE BLVD
INTERSECTION LAYOUTS
PROFILES

DESIGN BY:	GCC
DRAWN BY:	DSH
CHECKED BY:	DRE
APPROVED BY:	BDR
PROJECT NO:	156402
DATE:	10/6/2016

SCALE: Horz: 1"=40' Vert: 1"=4'

SHEET: 1 OF 2

PAGE: 84

10/6/2016
8:49:20 AM
...\ROPF1*Int*Profiles*01.dgn

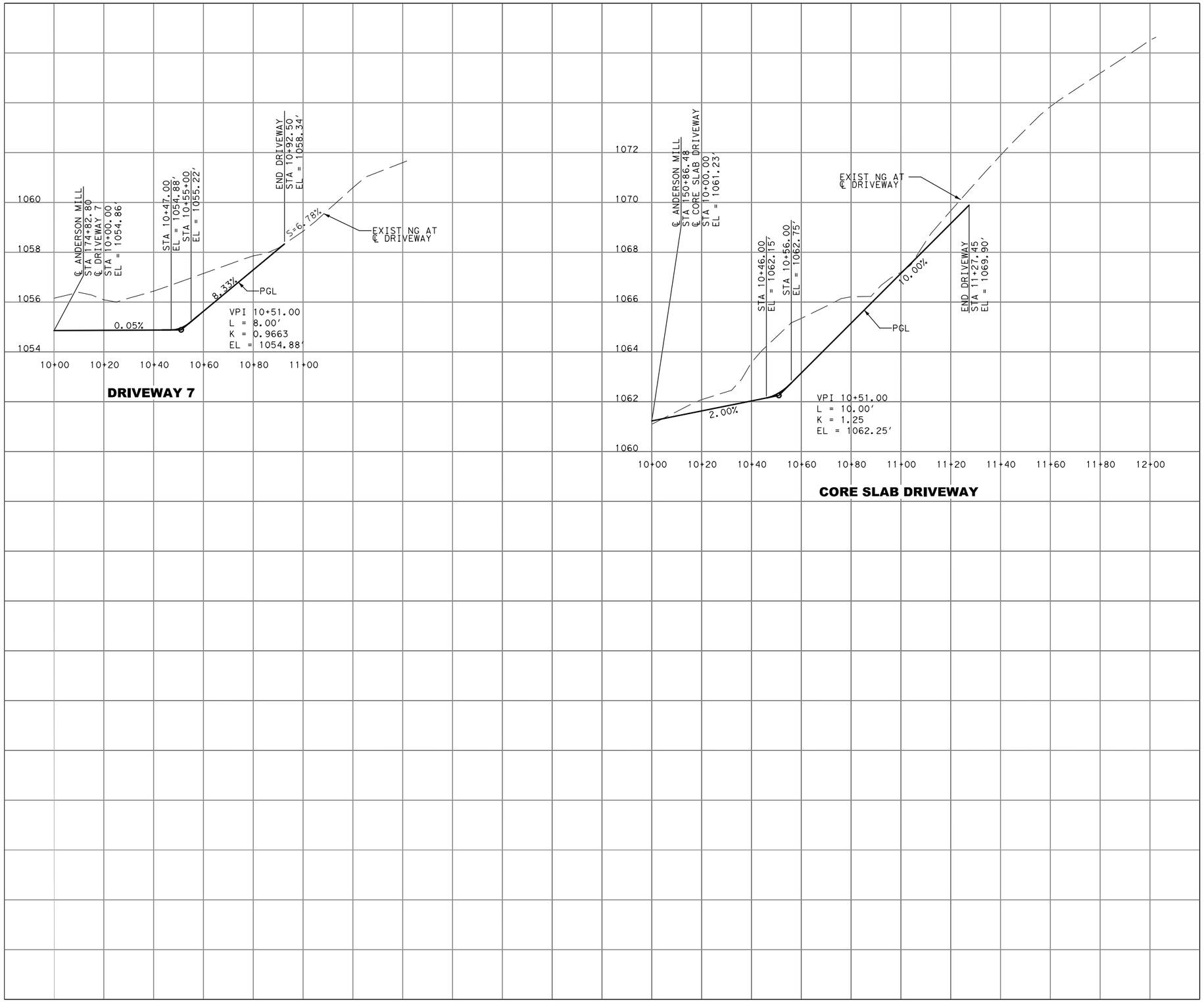

HORZ 0' 10' 20' 40'

NUMBER	DATE	REVISION	APPROVED

STATE OF TEXAS
GREGORY C. CALKINS
111309
LICENSED
PROFESSIONAL ENGINEER

10/06/2016

CEDAR PARK

Binkley & Barfield, Inc
consulting engineers
Texas Registration Number F-257

ANDERSON MILL ROAD
GASPAR BEND TO WHITESTONE BLVD
INTERSECTION LAYOUTS
PROFILES

DESIGN BY:	GCC	SCALE: Horz: 1"=40' Vert: 1"=4'	
DRAWN BY:	DSH		
CHECKED BY:	DRE		
APPROVED BY:	BDR	SHEET: 2 OF 2	
PROJECT NO:	156402		
DATE:	10/6/2016	PAGE: 85	

10/6/2016
8:49:25 AM
...\RDPF1*Int*Profiles*02.dgn

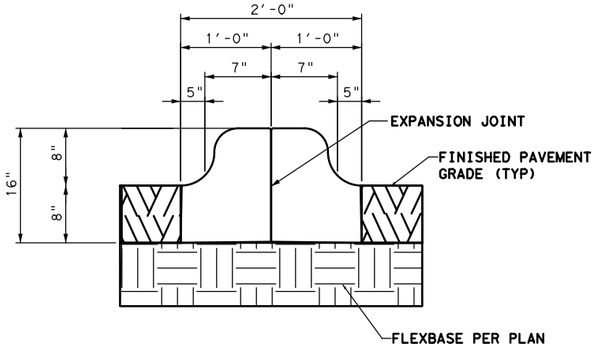

MODIFIED CURB DETAIL

40S-D (MOD)

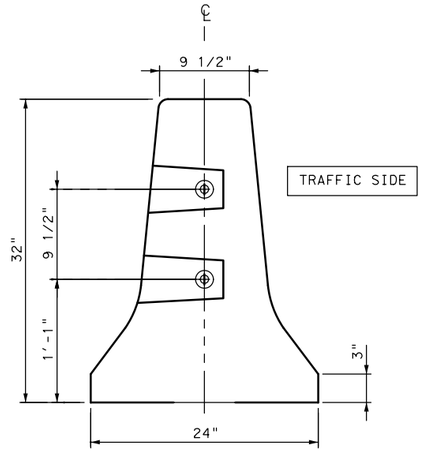

END VIEW (CSB) QUICK-BOLT

QUICK-BOLT POCKET LOCATIONS

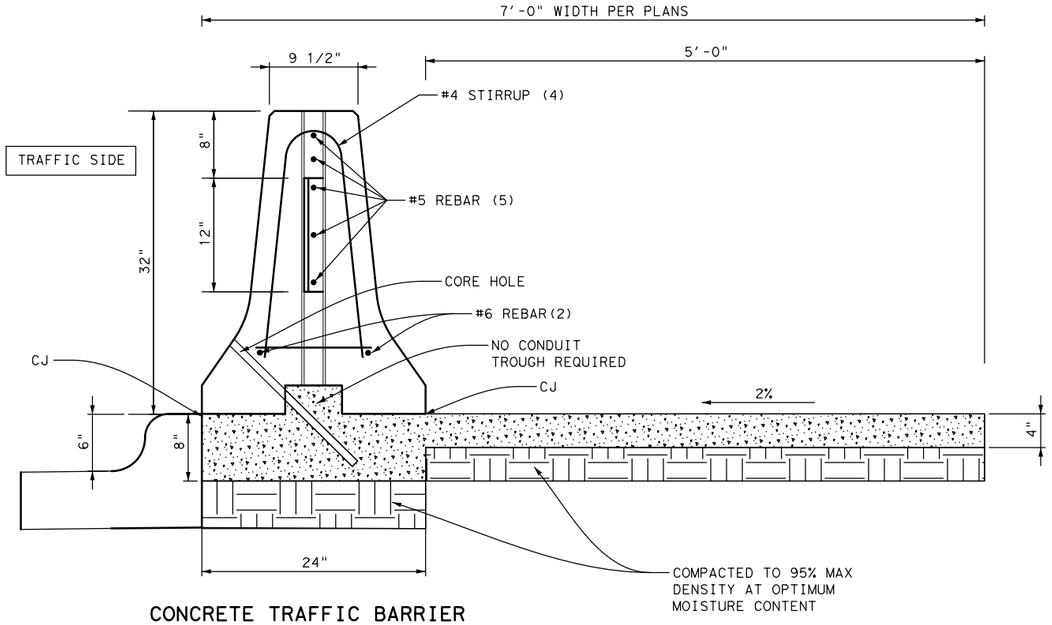

CONCRETE TRAFFIC BARRIER MOUNTING DETAILS/ SIDEWALK

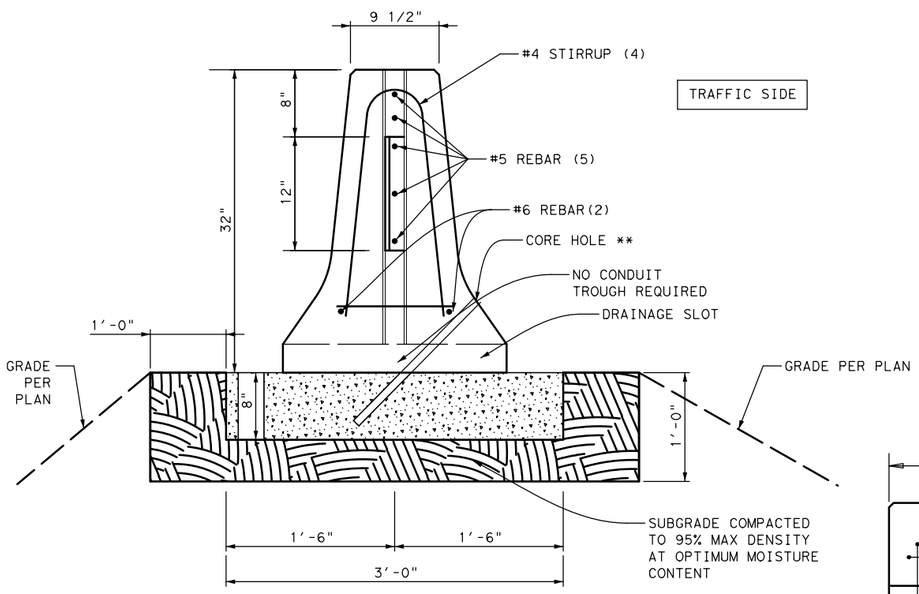

CONCRETE TRAFFIC RAIL DETAIL/ QUARRY PROTECTION

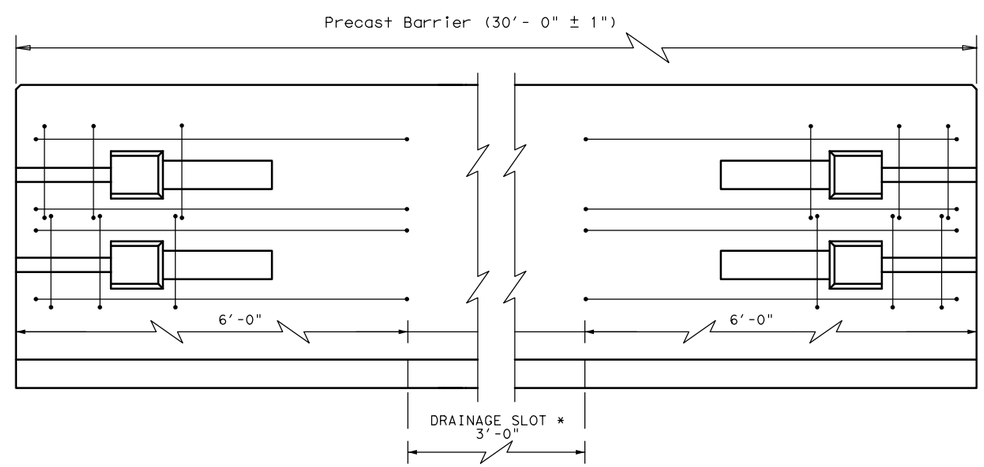

ELEVATION (CSB) DRAINAGE SLOT DETAILS

See Manufacturer's shop drawing for additional details
See Manufacturer's shop drawings for reinforcement details

NUMBER	DATE	REVISION	APPROVED

STATE OF TEXAS
GREGORY C. CALKINS
111309
LICENSED
PROFESSIONAL ENGINEER

10/06/2016

CEDAR PARK

Binkley & Barfield, Inc
consulting engineers
Texas Registration Number F-257

ANDERSON MILL ROAD
GASPAR BEND TO WHITESTONE BLVD
MISCELLANEOUS ROADWAY DETAILS

DESIGN BY:	GCC	SCALE:	NTS
DRAWN BY:	DSH		
CHECKED BY:	DRE	SHEET:	1 OF 1
APPROVED BY:	BDR		
PROJECT NO:	156402	PAGE:	86
DATE:	10/6/2016		

10/6/2016
8:49:26 AM
...\CADD\SHEETS\RDMS1*AM*05.dgn

GENERAL NOTES

DESIGNED ACCORDING TO AASHTO STANDARD SPECIFICATIONS FOR HIGHWAY BRIDGES 17TH EDITION.

CAST IN PLACE CONCRETE TO BE CLASS "C" F'C = 3600 PSI
PRECAST CONCRETE TO BE CLASS "H" F'C=4500 PSI

ALL REINFORCING STEEL TO BE GRADE 60

WALLS ARE DESIGNED ACCORDING TO PARAMETERS PROVIDED BY ARIAS GEOPROFESSIONALS GEOTECHNICAL REPORT 2014-700. ALTERNATE DESIGNS MUST LIKEWISE USE VALUES LISTED BELOW.

- SOIL WEIGHT: 120 PCF
- ACTIVE PRESSURE: 95 PSF EQUIVALENT FLUID PRESSURE, UNDRAINED CONDITION
- PASSIVE PRESSURE: 350 PSF EQUIVALENT FLUID PRESSURE, NEGLECT UPPER 1' FOR PASSIVE PRESSURE
- TRAFFIC SURCHARGE: 240 PSF
- COEFFICIENT OF LATERAL EARTH PRESSURE: 0.50
- SLIDING COEFFICIENT: 0.55
- BEARING CAPACITY: 2500 PSF MAXIMUM, 1,500 PSF RECCOMENDED, 2' BELOW NATURAL GROUND

WALLS ARE DESIGNED TO PROVIDE A MINIMUM FACTOR OF SAFETY AGAINST SLIDING OF 1.5 AND FACTOR OF SAFETY AGAINST OVERTURNING OF 2.0. THE UNDISTURBED SOIL DEPTH IN FRONT OF WALLS, FROM BOTTOM OF KEY UP, SHALL NOT BE LESS THAN Kw + Ft + 1'

RETAINING WALLS MAY BE PLACED ON HORIZONTAL CURVES BY ADJUSTING LENGTHS OF BARS D AND H. MINOR REVISIONS TO CONCRETE QUANTITIES MAY BE REQUIRED.

RETAINING WALLS ARE DETAILED TO BE PLACED ON GRADES UP THRU 10% WITH FOOTING LEVEL, WITH NO CHANGES IN REINFORCING STEEL. STEEPER GRADES CAN BE ACCOMMODATED BY SHORTENING BARS A AND B AND INCREASING LENGTH OF LEGS OF BARS U BY THE SAME AMOUNT. NO CHANGE IN QUANTITIES WILL BE INVOLVED.

WORKING DRAWINGS

IF ELEMENTS ARE TO BE PRECAST PRIOR TO BEGINNING WORK THE CONTRACTOR SHALL SUBMIT TO THE ENGINEER THE PRECAST PANEL SUPPLIER'S DETAILS, CALCULATIONS, AND PROCEDURES FOR PANEL/C.I.P. WALL CONNECTION SIGNED AND SEALED BY A PROFESSIONAL ENGINEER FOR APPROVAL BY THE ENGINEER ON RECORD.

PANEL LAYOUT MAY BE MODIFIED AS NECESSARY TO ACCOMMODATE WALL SUPPLIERS PANELS. CONTRACTOR SHALL SUBMIT MODIFICATIONS FOR APPROVAL BY THE ENGINEER ON RECORD.

CONTRACTOR MAY SUBMIT ALTERNATE CONNECTION DETAILS FOR PRECASTING RETAINING WALLS SHOWN, DETAILS SHALL BE SIGNED AND SEALED BY A PROFESSIONAL ENGINEER FOR APPROVAL BY THE ENGINEER ON RECORD.

CONSTRUCTION NOTES

WITHIN THE RETAINING WALL FOOT PRINT REMOVE ALL LOOSE FAT CLAY SOILS, ORGANICS, ANY DELETERIOUS MATERUAL AND SURFACE SOILS TO THE MINIMUM DEPTH SHOWN

SCARIFY AT LEAST 6 INCHES OF THE CUT SOIL SUBGRADE AND RECOMPACT TO A MINIMUM OF 95% OF THE MAXIMUM DRY DENSITY AS DETERMINED USING THE TEXAS DEPARTMENT OF TRANSPORTATION (TXDOT) TEXT METHOD TEX-113-E (IF GRAVELLY) IR TX-114-E (IF CLAYEY). HOLD WATER CONTENTS WITHIN +2% OF OPTIMUM

THE GEOTECHNICAL ENGINEER OR HIS REPRESENTATIVE SHOULD OBSERVE THE PREPARED FOUNDATION SUBGRADE PRIOR TO REINFORCING STEEL PLACEMENT. AT THIS TIME, THE GEOTECHNICAL ENGINEER MAY RECCOMEND REMOVAL OF UNSUITABLE (SOFT OR WET) SUBGRADE SOILS.

BACKFILL MATERIAL BEHIND WALLS SHALL CONSIST OF "SELECT FILL" MATERIAL MEETING THE PLASTICITY AND GRADATION REQUIREMENTS OF CITY OF AUSTIN STANDARD SPECIFICATION ITEM NO. 210S "FLEXIBLE BASE". THE BACKFILL ZONE SHOULD EXTEND FOR A LATERAL DISTANCE BEHIND THE WALL EQUIVALENT TO AT LEAST THE HEIGHT OF THE WALL. GENERAL EMBANKMENT MATERIAL MAY BE USED BEYOND THIS ZONE.

COMPACT SELECT FILL TO AT LEAST 95% OF THE MAXIMUM DRY DENSITY AS DETERMINED USING TXDOT TEST METHOD TEX-113-E, HOLD WATER CONTENTS WITHIN +2% OF THE OPTIMUM WATER CONTENT, AND MAINTAIN COMPACTED LIFT THICKNESS IO SIX INCHES OR LESS.

IF A SLOPE EXISTS THAT WILL NEED TO BE REMOVED IN FRONT OF THE WALL THE LENGTH REMOVED SHALL BE LIMITED TO THE AMOUNT THAT THE RETAINING WALL FOOTING CAN BE PLACED IN ONE DAY. AT NO TIME SHALL ANY CUT FACE BE EXPOSED FOR OVER 48 HOURS.

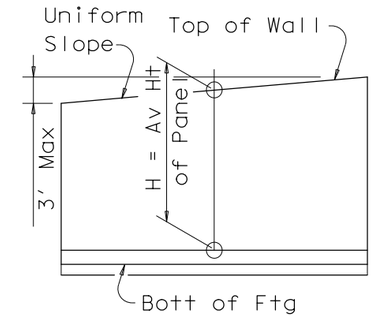

H DEFINITION

CONSTRUCTION ADJACENT TO RIGHT OF WAY. ALL CONSTRUCTION ACTIVITIES TO TAKE PLACE IN RIGHT OF WAY INCLUDING ALL BRACING AND SHORING REQUIRED TO ERECT THE WALL. THE CONTRACTOR MAY ELECT TO CAST IN PLACE THE WALL, PRECAST ELEMENTS AS SHOWN AND PROVIDE ALTERNATE CONNECTION DETAILS, OR SUBMIT WALLS TO A PRECAST WALL SUPPLIER.

ALL WORK REQUIRED TO FURNISH AND INSTALL THE WALL IS INCIDENTAL TO THE ITEM CLASS "C" CONCRETE, ITEM 414S-C "CAST-IN-PLACE PORTLAND CEMENT CONCRETE RETAINING WALL, INCLUDING REINFORCEMENT" REGAURDLESS OF CASTING METHOD SELECTED FOR THE WALL.

NOTES:
SEE RETAINING WALL DETAILS SHEET 1 OF 5 FOR GENERAL NOTES, WORKING DRAWING REQUIREMENTS AND CONSTRUCTION NOTES.

SEE SHEET "RETAINING WALL MISCELLANEOUS DETAILS" FOR ADDITIONAL DETAILS NOT SHOWN

SEE RAIL STANDARD FOR RAIL ANCHORAGE DETAILS

SEE ROADWAY SHEETS FOR HORIZONTAL AND VERTICAL GEOMETRY.

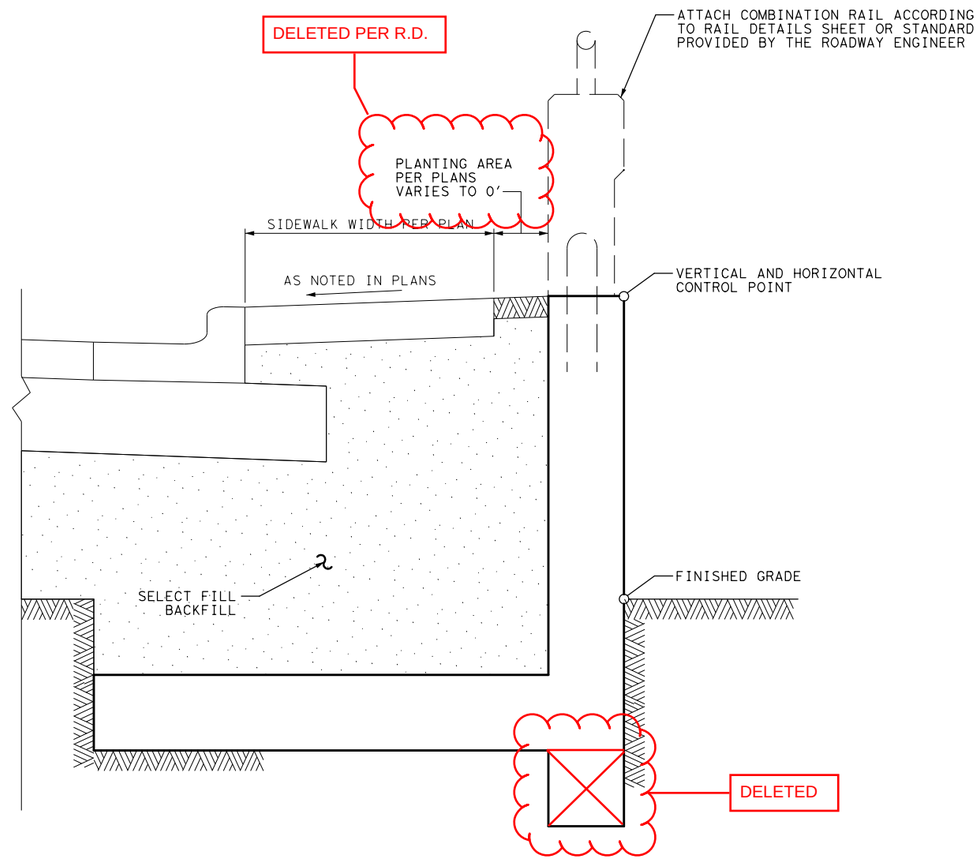

NUMBER	DATE	REVISION	APPROVED

STATE OF TEXAS
JAMES B. HORNSBY
81485
REGISTERED PROFESSIONAL ENGINEER
10/06/2016

CEDAR PARK

Binkley & Barfield, Inc
consulting engineers
Texas Registration Number F-257

ANDERSON MILL ROAD
GASPAR BEND TO WHITESTONE BLVD
RETAINING WALL DETAILS

DESIGN BY:	GCC	SCALE: NTS	
DRAWN BY:	DSH		
CHECKED BY:	DRE	SHEET: 1 OF 6	
APPROVED BY:	BDR		
PROJECT NO:	156402	PAGE: 87	
DATE:	10/6/2016		

10/6/2016
8:49:27 AM
...\CADD\SHEETS\RDMS1*AM*01.dgn

Wall Height "Ht"	PROPERTIES					REINFORCING STEEL FOR ONE 32′ PANEL														QUANTITY FOR ONE 32′ PANEL		Wall Height "Ht"
	WALL DIMENSIONS				Max Soil Press	Bars A		Bars B		Bars C		Bars D		Bars F		Bars H		Bars U		CONC (CY)	REINF (LB)	
(Ft)	Fw	Sw	Ft		T/SF	Spa.	Size	Spa.	Size	Spa.	Size	Spa.	Size	Spa.	Size	Spa.	Size	Spa.	Size			(Ft)
2	1′-9"	1′-0"	1′-0"		0.61	15"	#4	15"	#4	15"	#4	12"	#4	12"	#5	12"	#4	15"	#4	4.44	436	2
3	3′-0"	1′-0"	1′-0"		0.36	15"	#4	15"	#4	15"	#4	12"	#4	12"	#5	12"	#4	15"	#4	7.11	638	3
4	4′-7"	1′-0"	1′-0"		0.42	15"	#4	15"	#4	15"	#4	12"	#4	12"	#5	12"	#4	15"	#4	10.17	893	4

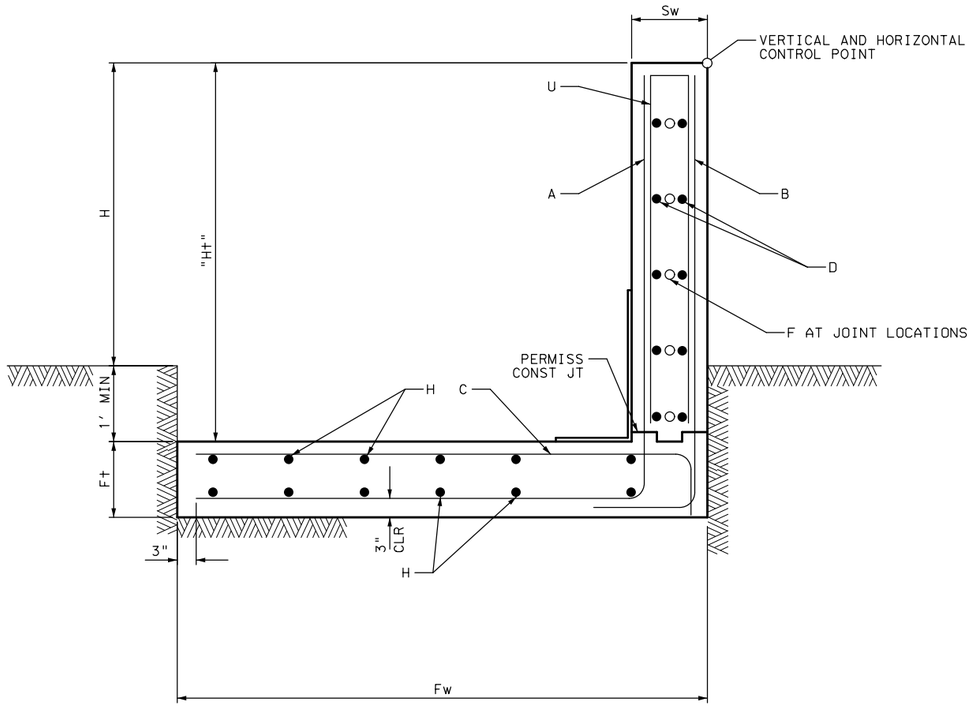

WALL SECTION

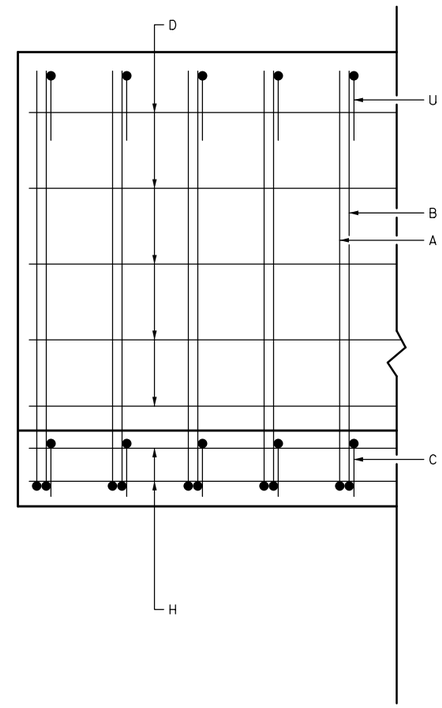

PARTIAL WALL ELEVATIONS

CONSTRUCTION ADJACENT TO RIGHT OF WAY. ALL CONSTRUCTION ACTIVITIES TO TAKE PLACE IN RIGHT OF WAY INCLUDING ALL BRACING AND SHORING REQUIRED TO ERECT THE WALL. THE CONTRACTOR MAY ELECT TO CAST IN PLACE THE WALL, PRECAST ELEMENTS AS SHOWN AND PROVIDE ALTERNATE CONNECTION DETAILS, OR SUBMIT WALLS TO A PRECAST WALL SUPPLIER.

ALL WORK REQUIRED TO FURNISH AND INSTALL THE WALL IS INCIDENTAL TO THE ITEM CLASS "C" CONCRETE, ITEM 414S-C "CAST-IN-PLACE PORTLAND CEMENT CONCRETE RETAINING WALL, INCLUDING REINFORCEMENT" REGAURDLESS OF CASTING METHOD SELECTED FOR THE WALL.

NOTES:
SEE RETAINING WALL DETAILS SHEET 1 OF 5 FOR GENERAL NOTES, WORKING DRAWING REQUIREMENTS AND CONSTRUCTION NOTES.

SEE SHEET "RETAINING WALL MISCELLANEOUS DETAILS" FOR ADDITIONAL DETAILS NOT SHOWN

SEE RAIL STANDARD FOR RAIL ANCHORAGE DETAILS

SEE ROADWAY SHEETS FOR HORIZONTAL AND VERTICAL GEOMETRY.

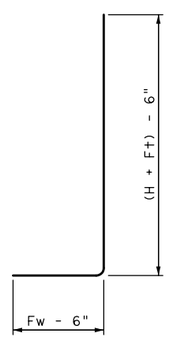

BARS A

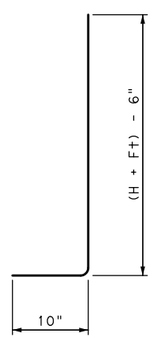

BARS B

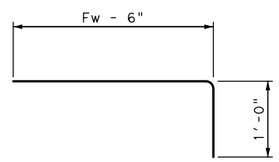

BARS C

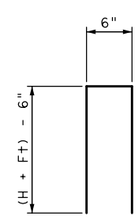

BARS U

NUMBER	DATE	REVISION	APPROVED

STATE OF TEXAS
JAMES B. HORNSBY
81485
REGISTERED PROFESSIONAL ENGINEER
10/06/2016

CEDAR PARK

Binkley & Barfield, Inc
consulting engineers
Texas Registration Number F-257

ANDERSON MILL ROAD
GASPAR BEND TO WHITESTONE BLVD
RETAINING WALL DETAILS

DESIGN BY:	GCC	SCALE: NTS	
DRAWN BY:	DSH		
CHECKED BY:	DRE	SHEET: 2 OF 6	
APPROVED BY:	BDR		
PROJECT NO:	156402	PAGE: 88	
DATE:	10/6/2016		

10/6/2016
8:49:30 AM
...\CADD\SHEETS\RDMS1*AM*02.dgn

THIS PAGE INTENTIONALLY LEFT BLANK

NUMBER	DATE	REVISION	APPROVED

CEDAR PARK

Binkley & Barfield, Inc
consulting engineers
Texas Registration Number F-257

ANDERSON MILL ROAD
GASPAR BEND TO WHITESTONE BLVD
RETAINING WALL DETAILS

DESIGN BY:	GCC	SCALE: NTS	
DRAWN BY:	DSH		
CHECKED BY:	DRE		
APPROVED BY:	BDR	SHEET: 3 OF 6	
PROJECT NO:	156402		
DATE:	10/6/2016	PAGE: 89	

10/6/2016
8:49:36 AM
...\SHEETS\RDMS1*AM*02A*Temp.dgn

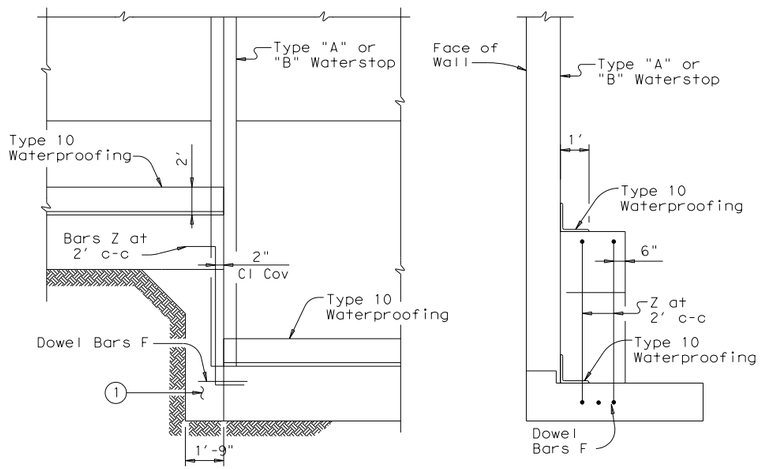

PARTIAL ELEVATION

PARTIAL SECTION

SHOWING WATERSTOP AT FOOTING JOINT

(1) Unreinforced Class "C" Concrete when difference in top of footing elevations is less than 6'. Omit when Dowel Bars F can be placed between adjacent footings with 4" cover top and bottom.

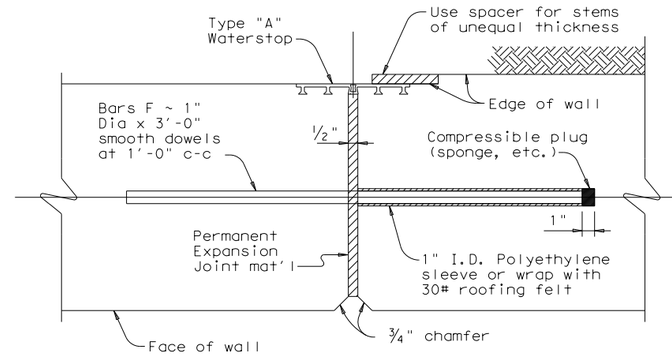

EXPANSION JOINT

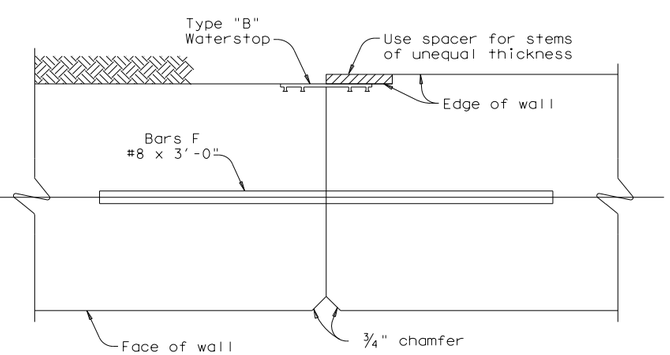

CONSTRUCTION JOINT

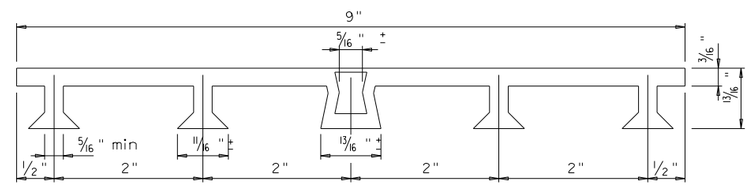

PVC WATERSTOP TYPE "A"

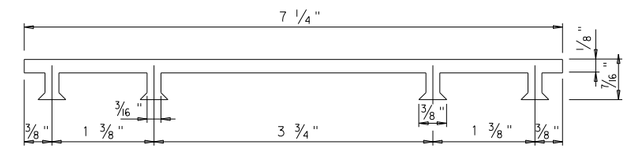

PVC WATERSTOP TYPE "B"

Note: Dimensions and shapes may vary slightly depending on manufacturer.

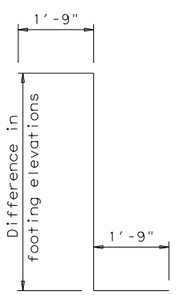

BARS Z (#5)

Omit Bars Z when difference in top of footing elevations is less than 6'.

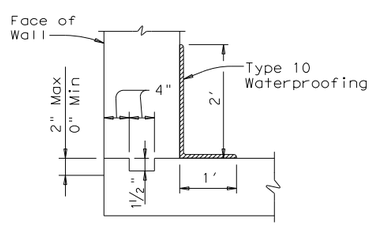

JOINT AND WATERSTOP DETAILS

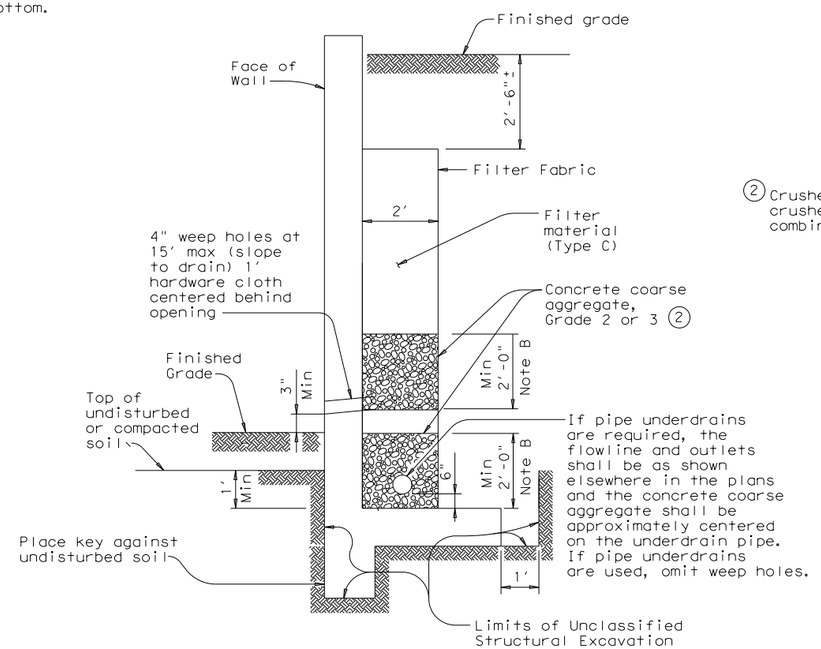

(2) Crushed blast furnace slag, recycled crushed hydraulic cement concrete or combination there of may not be used.

DRAINAGE DETAILS AND EXCAVATION DIAGRAM

Note A: Stop coarse aggregate at this level when weep holes are used.

Note B: Use coarse aggregate to here with filter material above when underdrains are used.

NUMBER	DATE	REVISION	APPROVED

STATE OF TEXAS
JAMES B. HORNSBY
81485
REGISTERED PROFESSIONAL ENGINEER

10/06/2016

CEDAR PARK

Binkley & Barfield, Inc
consulting engineers
Texas Registration Number F-257

ANDERSON MILL ROAD
GASPAR BEND TO WHITESTONE BLVD
RETAINING WALL DETAILS

DESIGN BY:	GCC	SCALE: NTS	
DRAWN BY:	DSH		
CHECKED BY:	DRE	SHEET: 4 OF 6	
APPROVED BY:	BDR		
PROJECT NO:	156402	PAGE: 90	
DATE:	10/6/2016		

10/6/2016
8:49:36 AM
...\CADD\SHEETS\RDMS1*AM*03.dgn

RETAINING STRUCTURE RET01					
STA	OFFSET RT	TOP OF SDWK ELEVATION	TOP OF WALL ELEVATION	FG	HT
104+98	33.01	1023.61	1023.28	1022.64	1.64
105+00	32.88	1023.61	1023.28	1022.64	1.64
105+50	32.00	1023.57	1023.24	1021.13	3.11
106+00	32.00	1023.30	1022.97	1020.02	3.95
106+50	32.00	1023.02	1022.69	1019.71	3.98
107+00	32.00	1022.88	1022.55	1020.16	3.39
107+50	32.00	1022.92	1022.59	1020.54	3.05
108+00	32.00	1023.11	1022.78	1020.66	3.12
108+50	32.00	1023.31	1022.98	1020.72	3.26
109+00	32.00	1023.52	1023.19	1020.72	3.47
109+50	32.00	1023.72	1023.39	1021.21	3.18
110+00	32.00	1023.92	1023.59	1021.82	2.77

RETAINING STRUCTURE RET02					
STA	OFFSET LT	TOP OF CURB ELEVATION	TOP OF WALL ELEVATION	FG	HT
106+00	27.00	1023.20	1022.19	1022.29	1.10
106+50	27.00	1022.92	1021.91	1020.98	1.93
107+00	27.00	1022.78	1021.77	1020.98	1.79
107+50	27.00	1022.82	1021.81	1021.51	1.30
108+00	27.00	1023.01	1022.00	1022.01	1.01
108+50	27.00	1023.21	1022.20	1022.28	1.08
109+00	27.00	1023.42	1022.41	1022.56	1.15
109+50	27.00	1023.62	1022.61	1022.56	1.05
110+00	27.00	1023.82	1022.81	1022.46	1.35
110+50	27.00	1024.03	1023.02	1022.86	1.16
111+00	27.00	1024.23	1023.22	1023.46	1.24
111+50	27.00	1024.43	1023.42	1023.96	1.54
112+00	27.00	1024.64	1023.63	1024.44	1.81

RETAINING STRUCTURE RET03				
STA	OFFSET RT	TOP OF WALL ELEVATION	FG	HT
115+60	41.95	1023.96	1021.72	3.24
116+00	41.80	1024.00	1023.20	1.80
116+50	41.48	1024.05	1022.44	2.61
117+00	40.18	1024.07	1021.91	3.16
117+50	37.14	1024.02	1021.91	3.11
117+56.96	36.58	1023.98	1022.04	2.94

RETAINING STRUCTURE RET04				
STA	OFFSET RT	TOP OF WALL ELEVATION	FG	HT
117+57.34	41.25	1023.89	1021.25	3.64
118+00	37.89	1022.70	1020.95	2.75
118+50	36.50	1023.86	1020.59	4.27
119+00	36.50	1023.98	1019.93	5.05
119+40	38.09	1024.17	1021.07	4.1

NOTE: OFFSET DISTANCE TO FACE-OF-WALL FROM ℄ OF ROADWAY.

NOTE: DIFFERENCE BETWEEN HT=TOP OF WALL ELEVATION AND FG @ BACK OF WALL ELEVATION + 1 FT MIN. COVER ABOVE TOP OF FOOTING. (FG=FINISHED GRADE 1 FT ABOVE TOP OF FOOTING)

NOTE: EXTEND VERTICAL BARS ABOVE CUT OFF WALL TOP ELEVATION TO TIE-IN CURB & GUTTER.

NUMBER	DATE	REVISION	APPROVED

STATE OF TEXAS
DENNIS R. ECKER
119381
LICENSED
PROFESSIONAL ENGINEER
10/06/2016

CEDAR PARK

Binkley & Barfield, Inc
consulting engineers
Texas Registration Number F-257

ANDERSON MILL ROAD
GASPAR BEND TO WHITESTONE BLVD
RETAINING WALL DETAILS

DESIGN BY: GCC
DRAWN BY: DSH
CHECKED BY: DRE
APPROVED BY: BDR
PROJECT NO: 156402
DATE: 10/6/2016

SCALE: NTS

SHEET: 5 OF 6

PAGE: 91

10/6/2016
9:22:00 AM
...\CADD\SHEETS\RTSD1*AM*01.dgn

TABLE 1 -SIDEWALK TURNDOWN					
STA	RT	HT	BACK OF WALK ELEV	FG	Δ ELEV
104+42.91	38.09	1.0	1023.13	1023.13	0.00
104+53.91	38.58	1.0	1023.19	1023.18	0.01
104+65.62	36.96	1.5	1023.26	1022.91	0.34
104+76.51	35.60	1.5	1023.38	1022.95	0.43
104+98.00	33.01	2.0	1023.48	1022.49	0.94

TABLE 2 - SIDEWALK TURNDOWN					
STA	RT	HT	BACK OF WALL ELEV	FG	Δ ELEV
112+73.00	55.0	2.5	1024.59	1023.15	1.44
113+00.00	55.0	2.5	1024.43	1023.16	1.27
113+33.09	57.0	2.5	1024.15	1022.97	1.18

TABLE 3 - CUT OFF WALL LT					
STA	LT	HT	TOP ELEVATION	FG	TC ELEV
112+00	27.00	1.5	1023.63	1024.44	1024.64
112+50	27.00	1.5	1023.77	1024.54	1024.77
113+00	27.00	1.5	1023.75	1024.54	1024.75
113+50	27.00	1.5	1023.57	1024.42	1024.57
114+00	27.09	1.5	1023.29	1024.27	1024.29
114+50	27.65	1.5	1023.00	1023.85	1024.00
114+90	28.43	1.5	1022.76	1023.47	1023.76

NOTE: ALL TABULAR VALUES IN FEET.

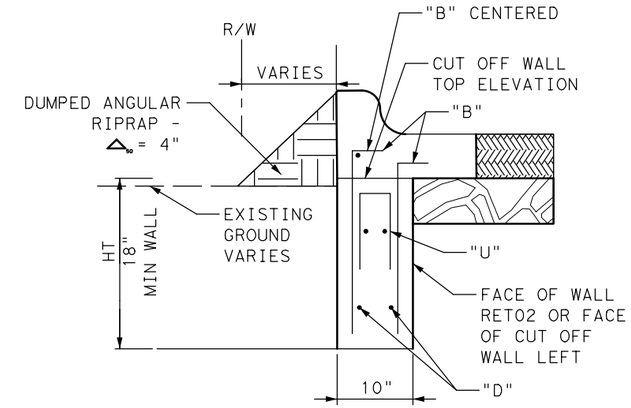

CUT OFF WALL LEFT

NTS

NOTE:
1. #5 BARS, SPACING 12" MAX 2" CLEAR ALL AROUND
2. CUT OFF WALL SHALL BE AT LEAST 1'-0" BELOW SUBGRADE.

NOTE: EXTEND VERTICAL BARS ABOVE CUT OFF WALL TOP ELEVATION TO TIE-IN CURB & GUTTER.

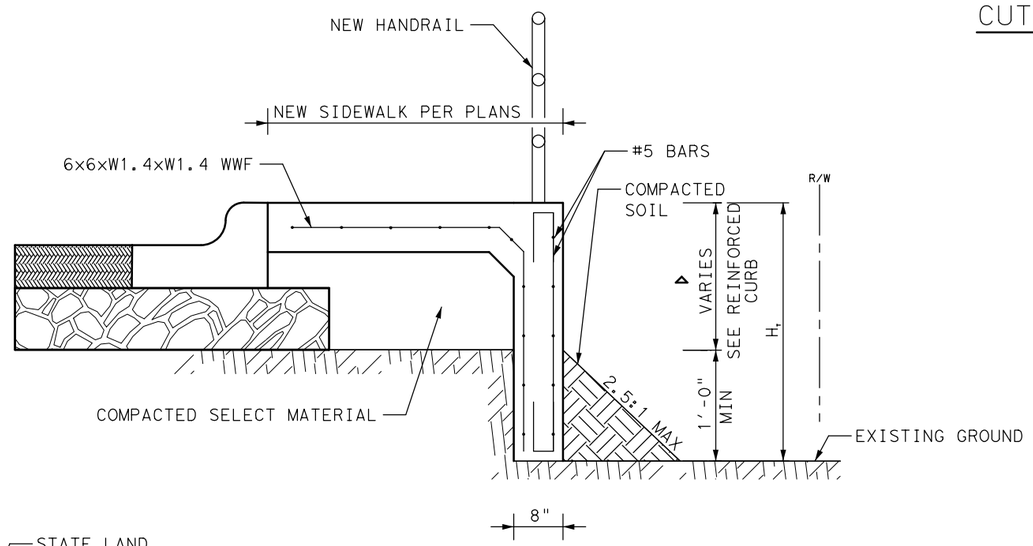

SIDEWALK TURN DOWN

STA 112+73.00 TO STA 113+50.00

NTS

NOTE: OFFSET DISTANCE TO FACE-OF-WALL FROM ℄ OF ROADWAY.

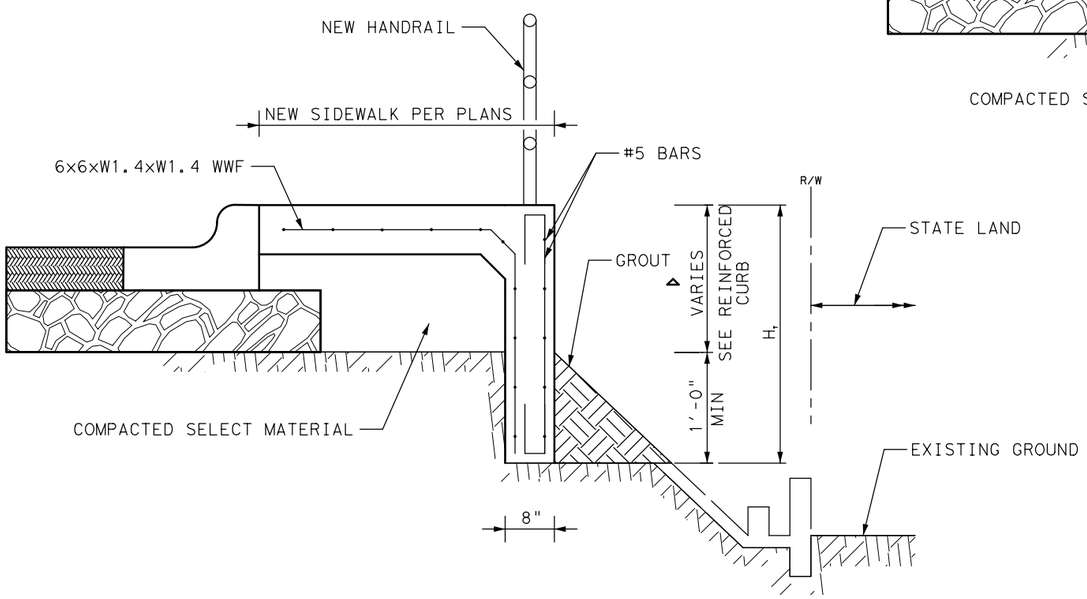

SIDEWALK TURN DOWN

STA 104+42.91, TO STA 104+98.00, RT

NTS

NOTE: OFFSET DISTANCE TO FACE-OF-WALL FROM ℄ OF ROADWAY.

NUMBER	DATE	REVISION	APPROVED

STATE OF TEXAS
DENNIS R. ECKER
119381
LICENSED
PROFESSIONAL ENGINEER
10/06/2016

CEDAR PARK

Binkley & Barfield, Inc
consulting engineers
Texas Registration Number F-257

ANDERSON MILL ROAD
GASPAR BEND TO WHITESTONE BLVD
RETAINING WALL DETAILS

DESIGN BY:	GCC	SCALE: NTS	
DRAWN BY:	DSH		
CHECKED BY:	DRE	SHEET: 6 OF 6	
APPROVED BY:	BDR		
PROJECT NO:	156402	PAGE: 92	
DATE:	10/6/2016		

10/6/2016
4:39:52 PM
...\CADD\SHEETS\RTSD1*AM*02.dgn

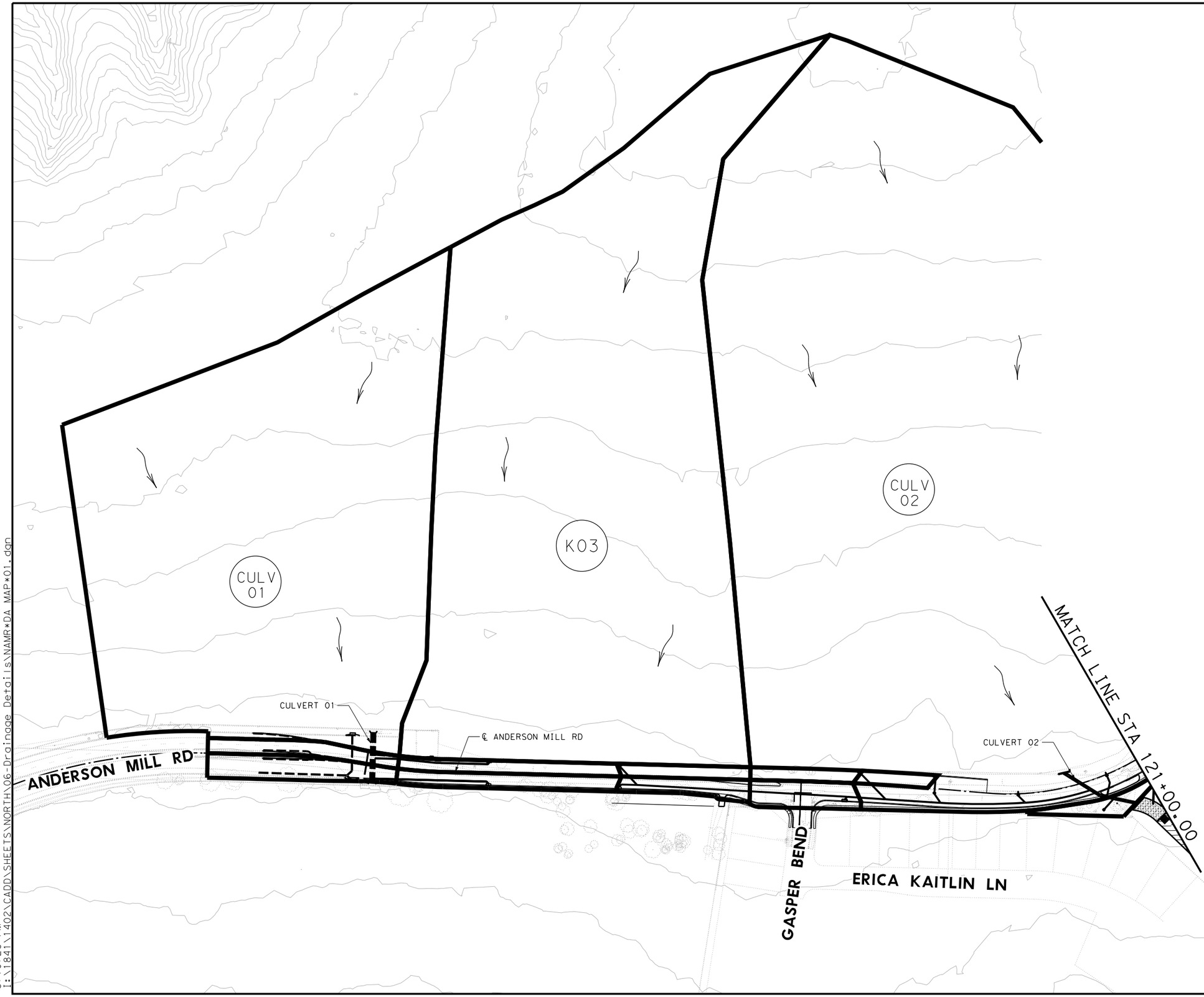

0' 50' 100' 200'
SCALE IN FEET

LEGEND

- EXISTING UTILITY
- EXISTING PLANIMETRICS
- DITCH FLOWLINE
- PROPOSED STORM SEWER
- EXISTING STORM SEWER
- DRAINAGE AREA BOUNDARY
- DRAINAGE FLOW DIRECTION
- XX — DRAINAGE AREA ID

NOTES:
1. SEE HYDRAULIC DATA SHEETS FOR DRAINAGE AREA CALCULATIONS.

STATE OF TEXAS
RILEY W. SLADEK
108887
LICENSED
PROFESSIONAL ENGINEER
10/4/2016

LJA Engineering, Inc.
FRN - F-1386

Binkley & Barfield, Inc
consulting engineers
Texas Registration Number F-257

CEDAR PARK

ANDERSON MILL RD
DRAINAGE AREA MAP
BEGIN - STA 121+00

DESIGN BY:	RS	SCALE:	1"=200'
DRAWN BY:	CM		
CHECKED BY:	DG	SHEET:	1 OF 4
APPROVED BY:	DG		
PROJECT NO:		PAGE:	93
DATE:	10/4/2016		

10/4/2016
3:10:28 PM
I:\1841\1402\CADD\SHEETS\NORTH\06-Drainage Details\NAMR*DA MAP*01.dgn

0′ 50′ 100′ 200′
SCALE IN FEET

LEGEND

- EXISTING UTILITY
- EXISTING PLANIMETRICS
- DITCH FLOWLINE
- PROPOSED STORM SEWER
- EXISTING STORM SEWER
- DRAINAGE AREA BOUNDARY
- DRAINAGE FLOW DIRECTION
- XX — DRAINAGE AREA ID

NOTES:
1. SEE HYDRAULIC DATA SHEETS FOR DRAINAGE AREA CALCULATIONS.

STATE OF TEXAS
RILEY W. SLADEK
108887
LICENSED
PROFESSIONAL ENGINEER
10/4/2016

LJA Engineering, Inc.
FRN - F-1386

Binkley & Barfield, Inc
consulting engineers
Texas Registration Number F-257

CEDAR PARK

ANDERSON MILL RD
DRAINAGE AREA MAP
STA 121+00 - STA 143+00

DESIGN BY:	RS	SCALE:	1"=200′
DRAWN BY:	CM		
CHECKED BY:	DG	SHEET:	2 OF 4
APPROVED BY:	DG		
PROJECT NO:		PAGE:	94
DATE:	10/4/2016		

10/4/2016
3:10:29 PM
I:\1841\1402\CADD\SHEETS\NORTH\06-Drainage Details\NAMR*DA MAP*02.dgn

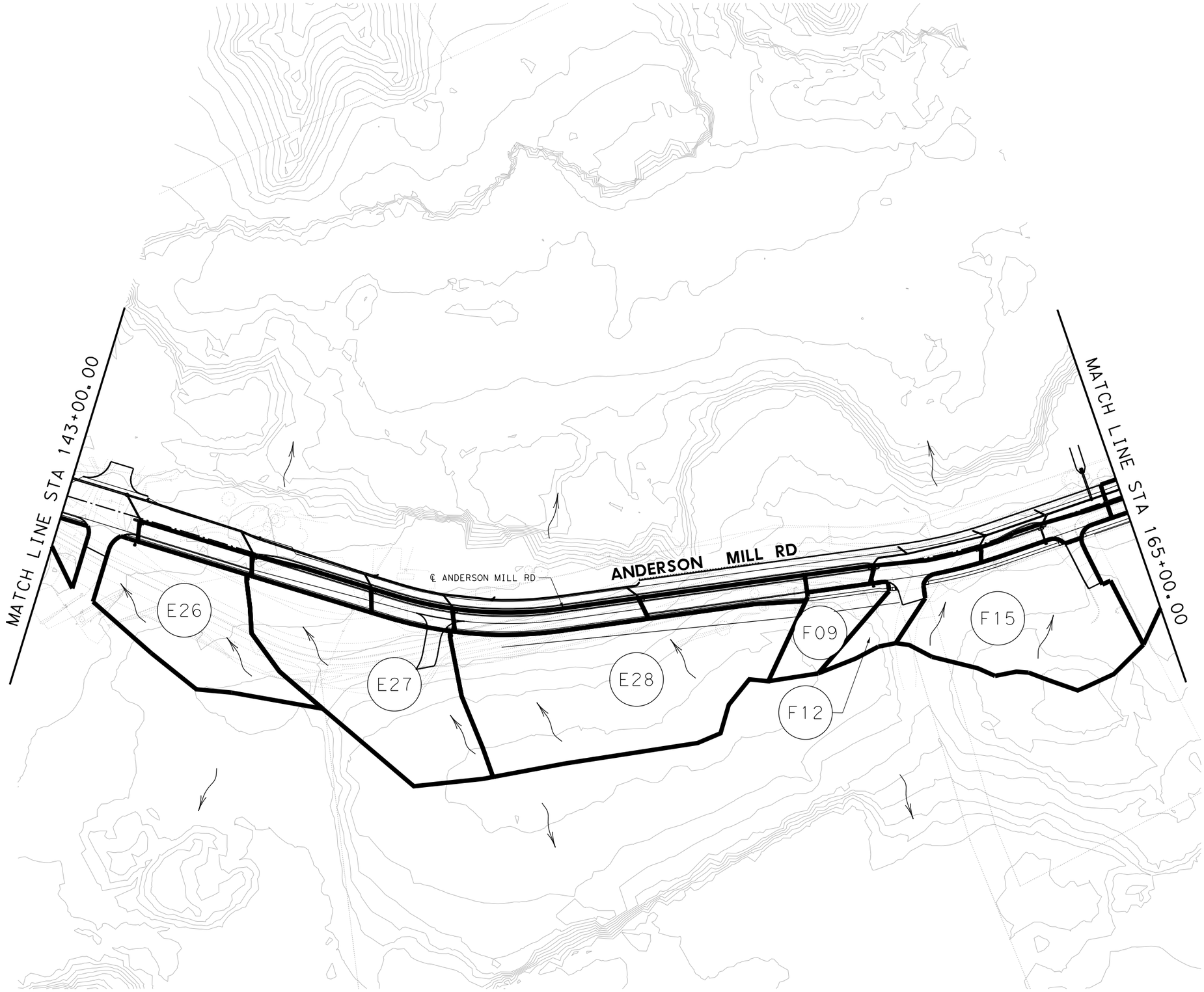

0' 50' 100' 200'
SCALE IN FEET

LEGEND

- EXISTING UTILITY
- EXISTING PLANIMETRICS
- DITCH FLOWLINE
- PROPOSED STORM SEWER
- EXISTING STORM SEWER
- DRAINAGE AREA BOUNDARY
- DRAINAGE FLOW DIRECTION
- XX — DRAINAGE AREA ID

NOTES:
1. SEE HYDRAULIC DATA SHEETS FOR DRAINAGE AREA CALCULATIONS.

STATE OF TEXAS
RILEY W. SLADEK
108887
LICENSED PROFESSIONAL ENGINEER
10/4/2016

LJA Engineering, Inc.
FRN - F-1386

Binkley & Barfield, Inc
consulting engineers
Texas Registration Number F-257

CEDAR PARK

ANDERSON MILL RD
DRAINAGE AREA MAP
STA 143+00 - STA 165+00

DESIGN BY:	RS	SCALE:	1"=200'
DRAWN BY:	CM		
CHECKED BY:	DG	SHEET: 3 OF 4	
APPROVED BY:	DG		
PROJECT NO:		PAGE: 95	
DATE:	10/4/2016		

10/4/2016
3:10:30 PM
I:\1841\1402\CADD\SHEETS\NORTH\06-Drainage Details\NAMR*DA MAP*03.dgn

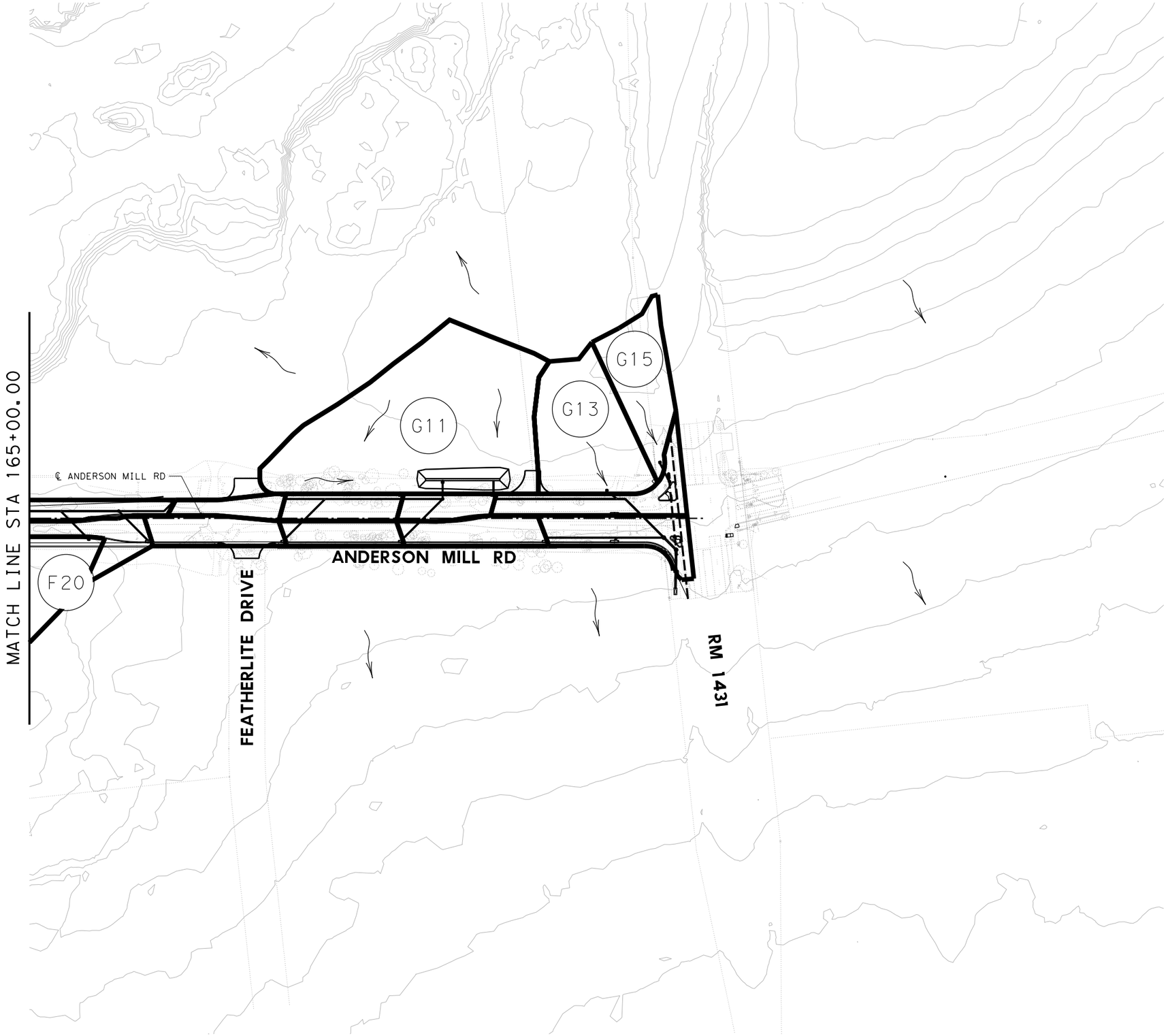

0' 50' 100' 200'
SCALE IN FEET

LEGEND

- EXISTING UTILITY
- EXISTING PLANIMETRICS
- DITCH FLOWLINE
- PROPOSED STORM SEWER
- EXISTING STORM SEWER
- DRAINAGE AREA BOUNDARY
- DRAINAGE FLOW DIRECTION
- XX — DRAINAGE AREA ID

NOTES:
1. SEE HYDRAULIC DATA SHEETS FOR DRAINAGE AREA CALCULATIONS.

STATE OF TEXAS
RILEY W. SLADEK
108887
LICENSED
PROFESSIONAL ENGINEER
10/4/2016

LJA Engineering, Inc.
FRN - F-1386

Binkley & Barfield, Inc
consulting engineers
Texas Registration Number F-257

CEDAR PARK

ANDERSON MILL RD
DRAINAGE AREA MAP
STA 165+00 - END

DESIGN BY:	RS	SCALE:	1"=200'
DRAWN BY:	CM		
CHECKED BY:	DG	SHEET:	4 OF 4
APPROVED BY:	DG		
PROJECT NO:		PAGE:	96
DATE:	10/4/2016		

10/4/2016
3:10:31 PM
I:\1841\1402\CADD\SHEETS\NORTH\06-Drainage Details\NAMR*DA MAP*04.dgn

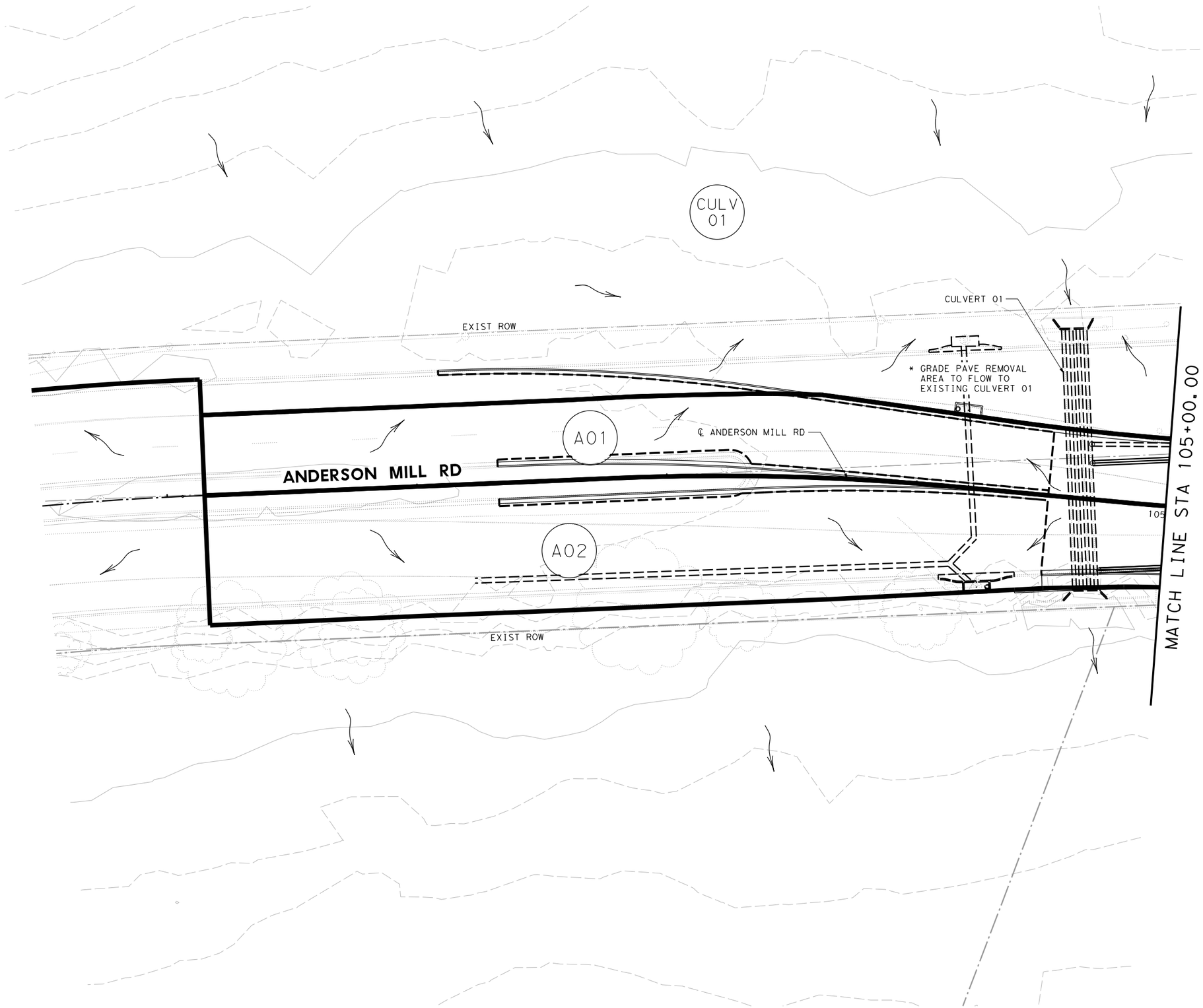

0' 10' 20' 40'
SCALE IN FEET

LEGEND

- EXISTING UTILITY
- EXISTING PLANIMETRICS
- DITCH FLOWLINE
- PROPOSED STORM SEWER
- EXISTING STORM SEWER
- DRAINAGE AREA BOUNDARY
- DRAINAGE FLOW DIRECTION
- XX DRAINAGE AREA ID

NOTES:
1. SEE HYDRAULIC DATA SHEETS FOR DRAINAGE AREA CALCULATIONS.

STATE OF TEXAS
RILEY W. SLADEK
108887
LICENSED
PROFESSIONAL ENGINEER
10/4/2016

LJA Engineering, Inc.
FRN - F-1386

Binkley & Barfield, Inc
consulting engineers
Texas Registration Number F-257

CEDAR PARK

ANDERSON MILL RD
DRAINAGE AREAS
BEGIN - STA 105+00

DESIGN BY:	RS	SCALE:	1"=40'
DRAWN BY:	CM		
CHECKED BY:	DG	SHEET:	1 OF 18
APPROVED BY:	DG		
PROJECT NO:		PAGE:	97
DATE:	10/4/2016		

10/4/2016
3:10:40 PM
I:\1841\1402\CADD\SHEETS\NORTH\06-Drainage Details\NAMR*DA *01.dgn

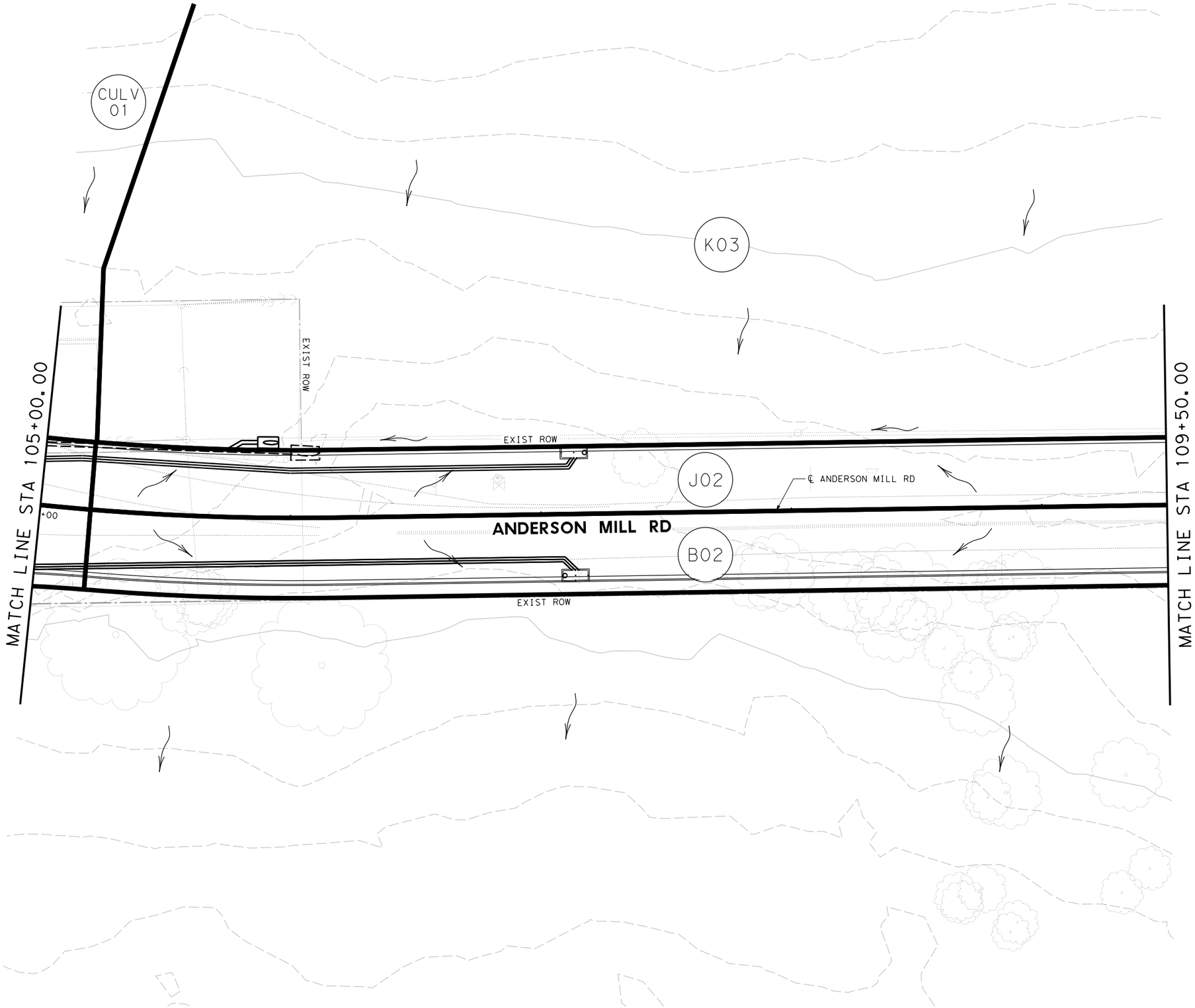

0' 10' 20' 40'
SCALE IN FEET

LEGEND

- EXISTING UTILITY
- EXISTING PLANIMETRICS
- DITCH FLOWLINE
- PROPOSED STORM SEWER
- EXISTING STORM SEWER
- DRAINAGE AREA BOUNDARY
- DRAINAGE FLOW DIRECTION
- XX — DRAINAGE AREA ID

NOTES:
1. SEE HYDRAULIC DATA SHEETS FOR DRAINAGE AREA CALCULATIONS.

STATE OF TEXAS
RILEY W. SLADEK
108887
LICENSED
PROFESSIONAL ENGINEER
10/4/2016

LJA Engineering, Inc.
FRN - F-1386

Binkley & Barfield, Inc
consulting engineers
Texas Registration Number F-257

CEDAR PARK

ANDERSON MILL RD
DRAINAGE AREAS
STA 105+00 - STA 109+50

DESIGN BY:	RS	SCALE:	1"=40'
DRAWN BY:	CM		
CHECKED BY:	DG	SHEET:	2 OF 18
APPROVED BY:	DG		
PROJECT NO:		PAGE:	98
DATE:	10/4/2016		

10/4/2016
3:10:41 PM
I:\1841\1402\CADD\SHEETS\NORTH\06-Drainage Details\NAMR*DA *02.dgn

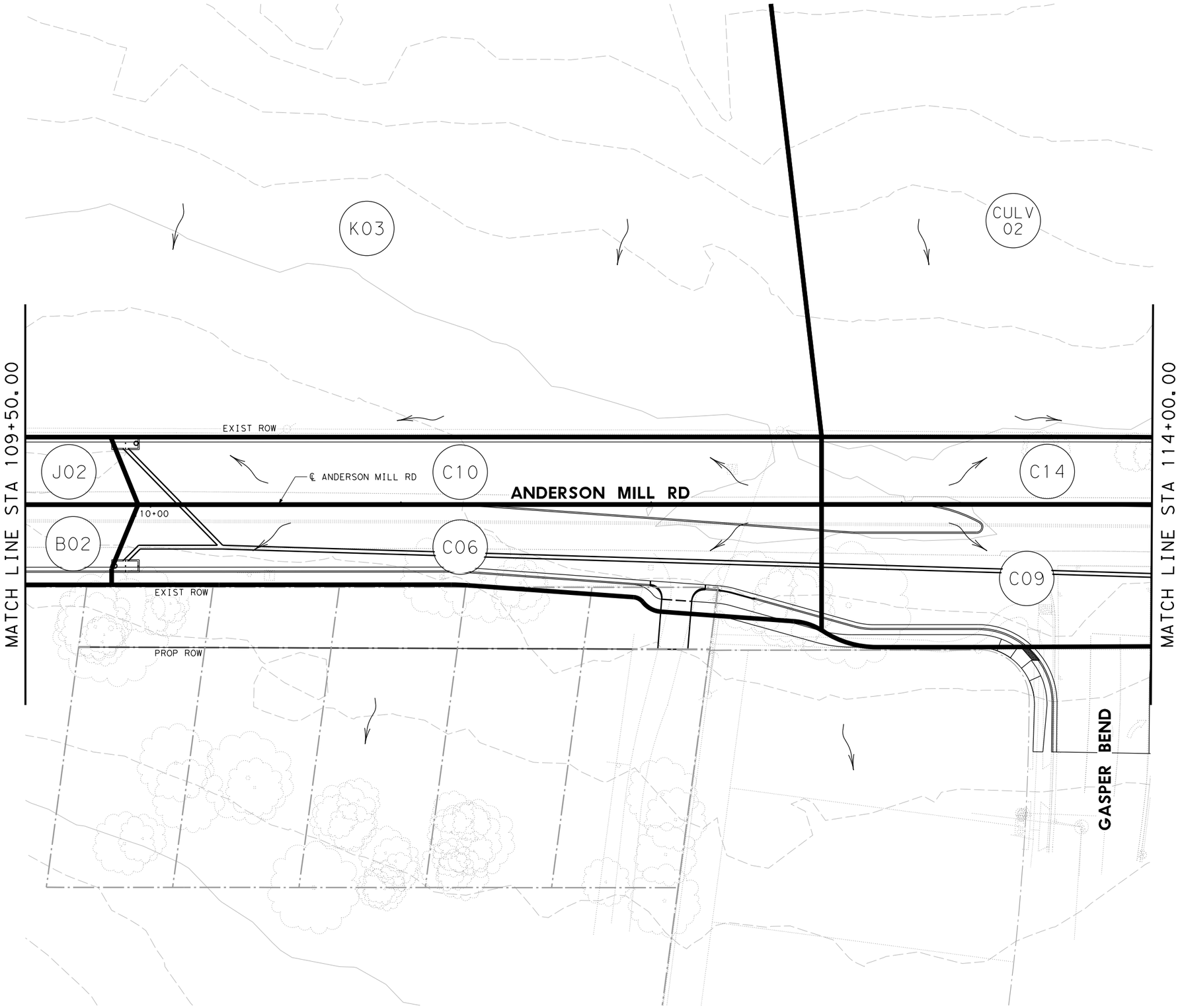

0′ 10′ 20′ 40′
SCALE IN FEET

LEGEND

- EXISTING UTILITY
- EXISTING PLANIMETRICS
- DITCH FLOWLINE
- PROPOSED STORM SEWER
- EXISTING STORM SEWER
- DRAINAGE AREA BOUNDARY
- DRAINAGE FLOW DIRECTION
- XX — DRAINAGE AREA ID

NOTES:
1. SEE HYDRAULIC DATA SHEETS FOR DRAINAGE AREA CALCULATIONS.

STATE OF TEXAS
RILEY W. SLADEK
108887
LICENSED
PROFESSIONAL ENGINEER
10/4/2016

LJA Engineering, Inc.
FRN - F-1386

Binkley & Barfield, Inc
consulting engineers
Texas Registration Number F-257

CEDAR PARK

ANDERSON MILL RD
DRAINAGE AREAS
STA 109+50 - STA 114+00

DESIGN BY:	RS	SCALE:	1"=40′
DRAWN BY:	CM		
CHECKED BY:	DG	SHEET:	3 OF 18
APPROVED BY:	DG		
PROJECT NO:		PAGE:	99
DATE:	10/4/2016		

10/4/2016
3:10:42 PM
I:\1841\1402\CADD\SHEETS\NORTH\06-Drainage Details\NAMR*DA *03.dgn

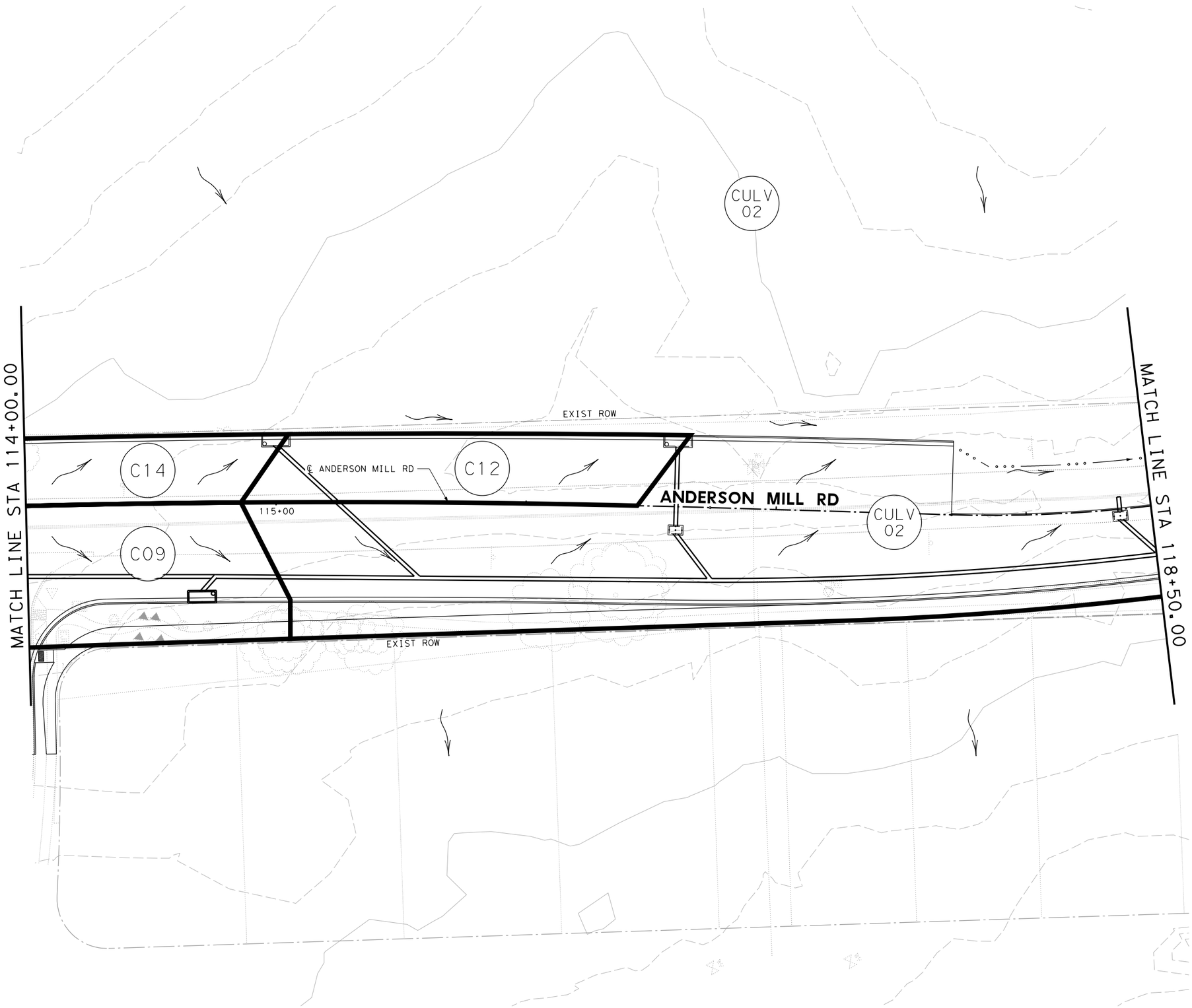

0' 10' 20' 40'
SCALE IN FEET

LEGEND

- EXISTING UTILITY
- EXISTING PLANIMETRICS
- DITCH FLOWLINE
- PROPOSED STORM SEWER
- EXISTING STORM SEWER
- DRAINAGE AREA BOUNDARY
- DRAINAGE FLOW DIRECTION
- XX — DRAINAGE AREA ID

NOTES:
1. SEE HYDRAULIC DATA SHEETS FOR DRAINAGE AREA CALCULATIONS.

STATE OF TEXAS
RILEY W. SLADEK
108887
LICENSED
PROFESSIONAL ENGINEER
10/4/2016

LJA Engineering, Inc.
FRN - F-1386

Binkley & Barfield, Inc
consulting engineers
Texas Registration Number F-257

CEDAR PARK

ANDERSON MILL RD
DRAINAGE AREAS
STA 114+00 - STA 118+50

DESIGN BY:	RS	SCALE:	1"=40'
DRAWN BY:	CM		
CHECKED BY:	DG	SHEET:	4 OF 18
APPROVED BY:	DG		
PROJECT NO:		PAGE:	100
DATE:	10/4/2016		

10/4/2016
3:10:43 PM
i:\1841\1402\CADD\SHEETS\NORTH\06-Drainage Details\NAMR*DA *04.dgn

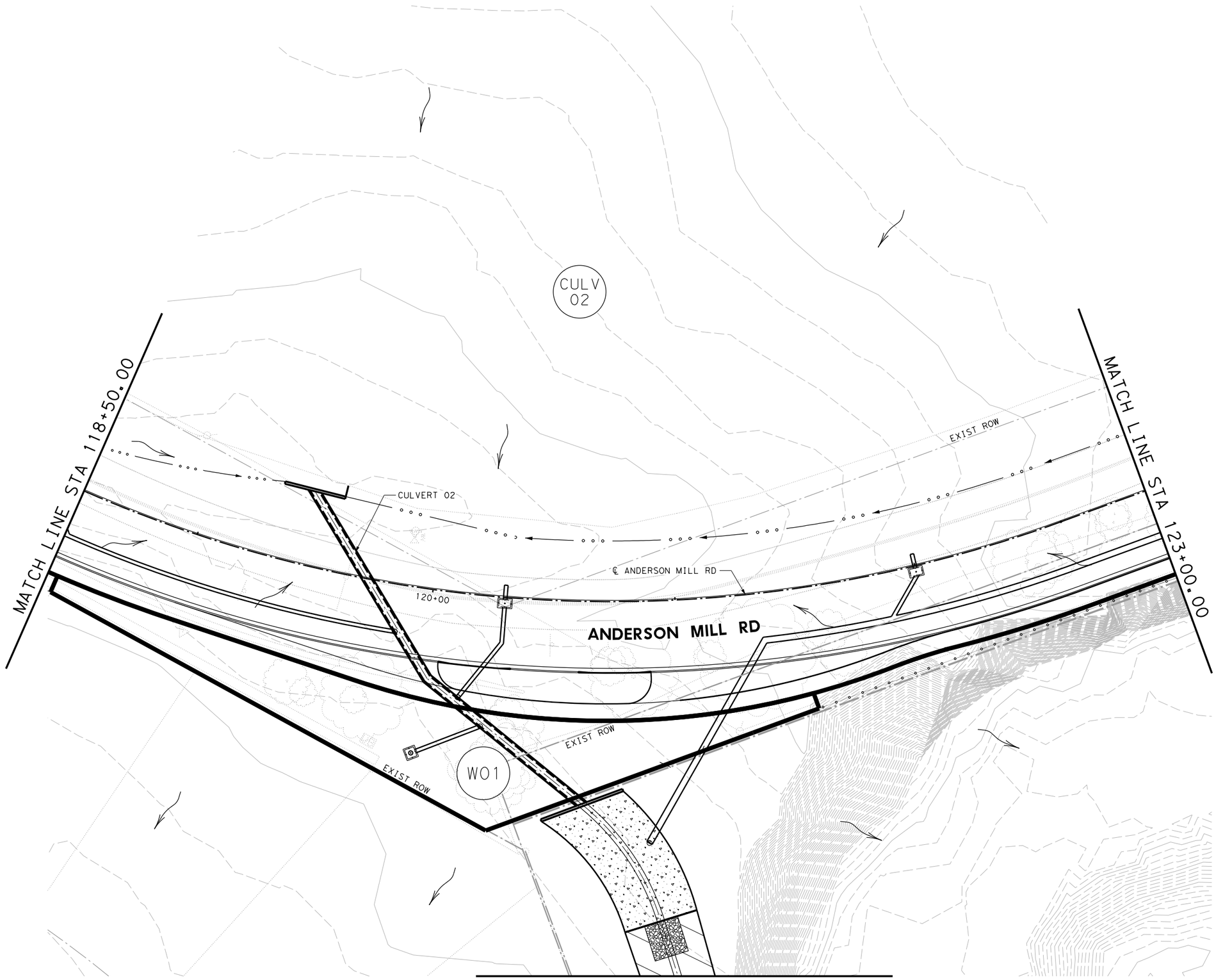

0′ 10′ 20′ 40′
SCALE IN FEET

LEGEND

- EXISTING UTILITY
- EXISTING PLANIMETRICS
- DITCH FLOWLINE
- PROPOSED STORM SEWER
- EXISTING STORM SEWER
- DRAINAGE AREA BOUNDARY
- DRAINAGE FLOW DIRECTION
- XX — DRAINAGE AREA ID

NOTES:
1. SEE HYDRAULIC DATA SHEETS FOR DRAINAGE AREA CALCULATIONS.

STATE OF TEXAS
RILEY W. SLADEK
108887
LICENSED
PROFESSIONAL ENGINEER
10/4/2016

LJA Engineering, Inc.
FRN - F-1386

Binkley & Barfield, Inc
consulting engineers
Texas Registration Number F-257

CEDAR PARK

ANDERSON MILL RD
DRAINAGE AREAS
STA 118+50 - STA 123+00

DESIGN BY:	RS	SCALE:	1"=40′
DRAWN BY:	CM	SHEET: 5 OF 18	
CHECKED BY:	DG		
APPROVED BY:	DG	PAGE:	101
PROJECT NO:			
DATE:	10/4/2016		

10/4/2016
3:52:11 PM
I:\1841\1402\CADD\SHEETS\NORTH\06-Drainage Details\NAMR*DA *05.dgn

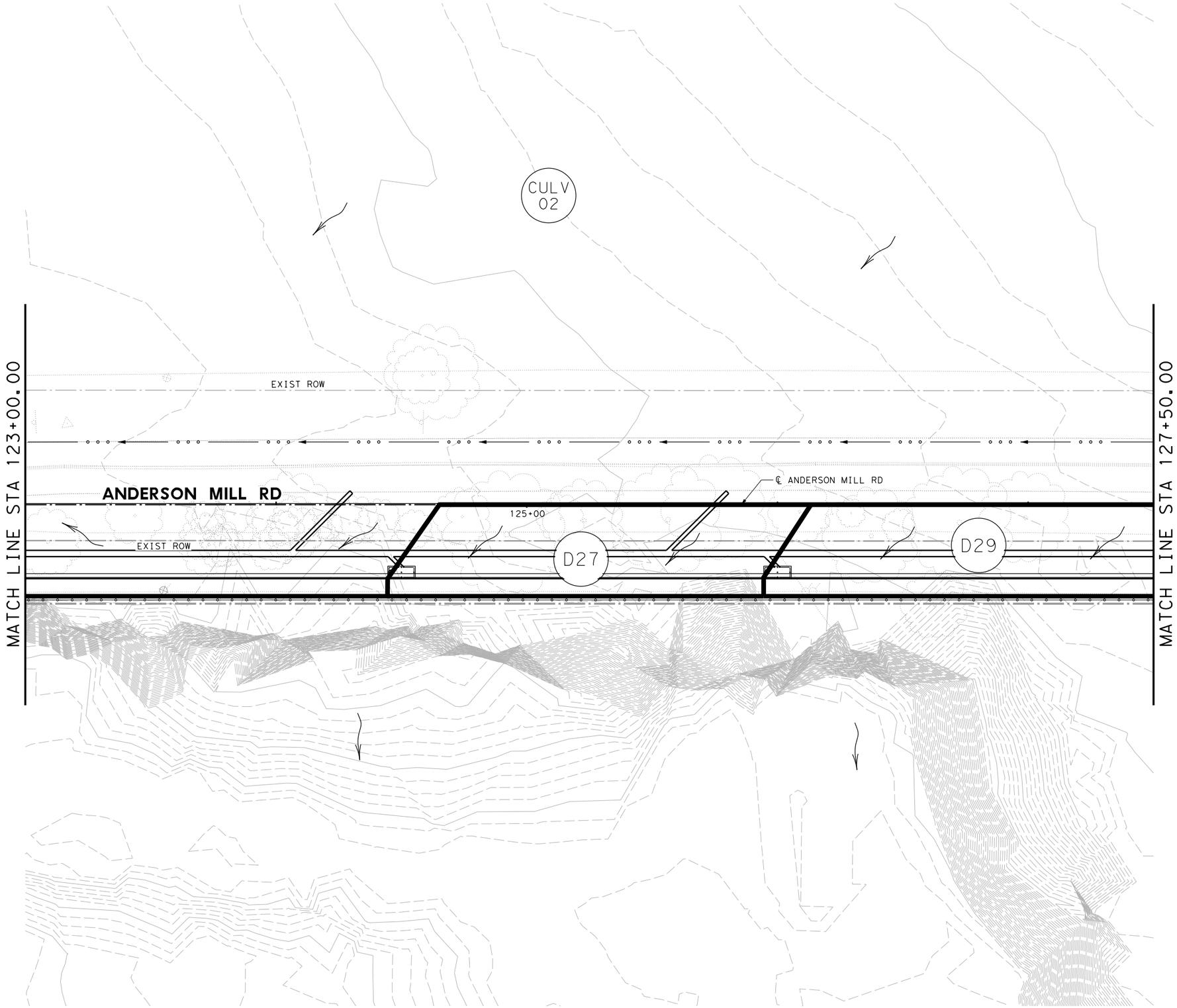

0′ 10′ 20′ 40′
SCALE IN FEET

LEGEND

- EXISTING UTILITY
- EXISTING PLANIMETRICS
- DITCH FLOWLINE
- PROPOSED STORM SEWER
- EXISTING STORM SEWER
- DRAINAGE AREA BOUNDARY
- DRAINAGE FLOW DIRECTION
- XX — DRAINAGE AREA ID

NOTES:
1. SEE HYDRAULIC DATA SHEETS FOR DRAINAGE AREA CALCULATIONS.

STATE OF TEXAS
RILEY W. SLADEK
108887
LICENSED PROFESSIONAL ENGINEER
10/4/2016

LJA Engineering, Inc.
FRN - F-1386

Binkley & Barfield, Inc
consulting engineers
Texas Registration Number F-257

CEDAR PARK

ANDERSON MILL RD
DRAINAGE AREAS
STA 123+00 - STA 127+50

DESIGN BY:	RS	SCALE:	1"=40′
DRAWN BY:	CM		
CHECKED BY:	DG	SHEET:	6 OF 18
APPROVED BY:	DG		
PROJECT NO:			
DATE:	10/4/2016	PAGE:	102

10/4/2016
3:10:44 PM
I:\1841\1402\CADD\SHEETS\NORTH\06-Drainage Details\NAMR*DA *06.dgn

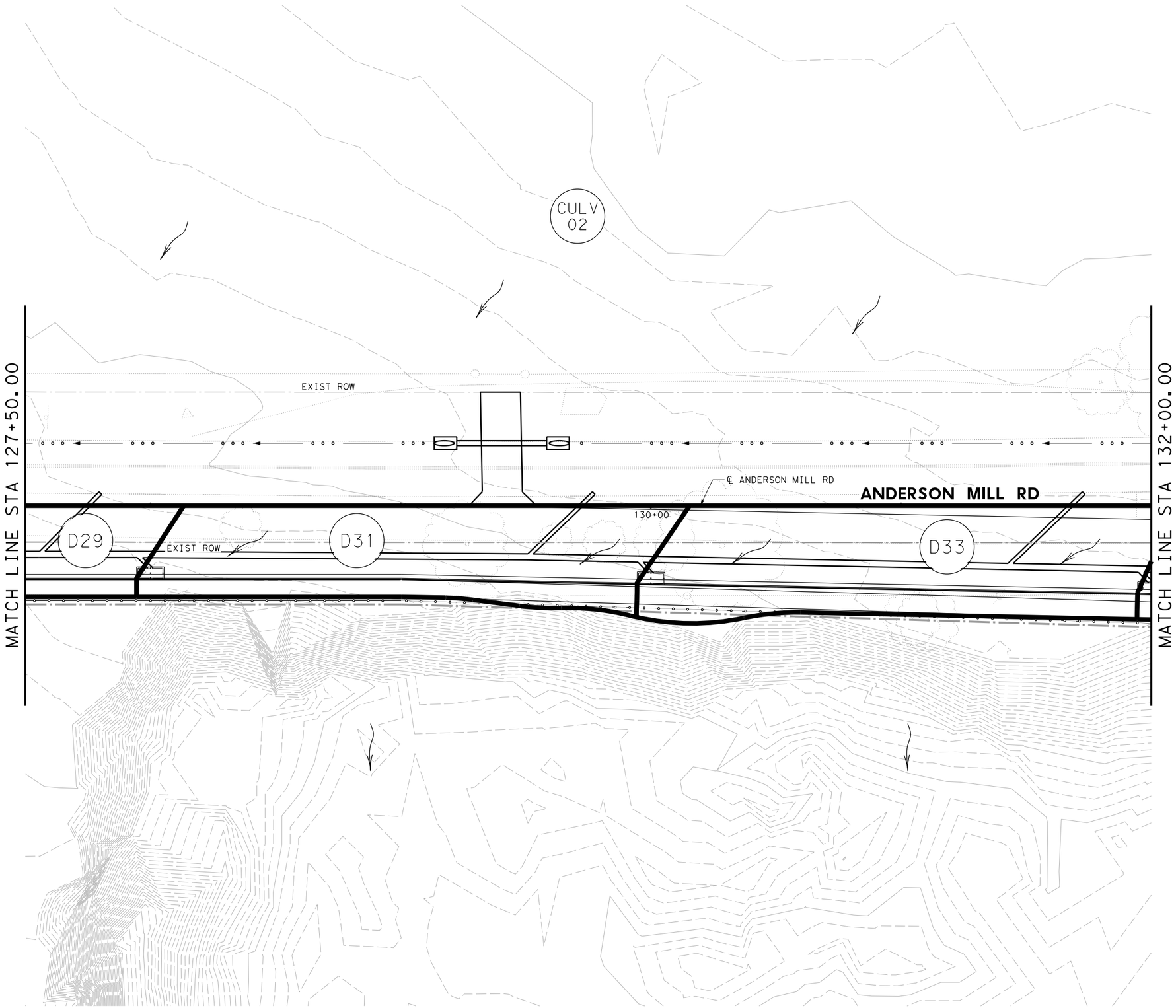

0' 10' 20' 40'
SCALE IN FEET

LEGEND

- EXISTING UTILITY
- EXISTING PLANIMETRICS
- DITCH FLOWLINE
- PROPOSED STORM SEWER
- EXISTING STORM SEWER
- DRAINAGE AREA BOUNDARY
- DRAINAGE FLOW DIRECTION
- XX — DRAINAGE AREA ID

NOTES:
1. SEE HYDRAULIC DATA SHEETS FOR DRAINAGE AREA CALCULATIONS.

STATE OF TEXAS
RILEY W. SLADEK
108887
LICENSED
PROFESSIONAL ENGINEER
10/4/2016

LJA Engineering, Inc.
FRN - F-1386

Binkley & Barfield, Inc
consulting engineers
Texas Registration Number F-257

CEDAR PARK

ANDERSON MILL RD
DRAINAGE AREAS
STA 127+50 - STA 132+00

DESIGN BY:	RS	SCALE:	1"=40'
DRAWN BY:	CM		
CHECKED BY:	DG	SHEET:	7 OF 18
APPROVED BY:	DG		
PROJECT NO:		PAGE:	103
DATE:	10/4/2016		

10/4/2016
3:10:45 PM
I:\1841\1402\CADD\SHEETS\NORTH\06-Drainage Details\NAMR*DA *07.dgn

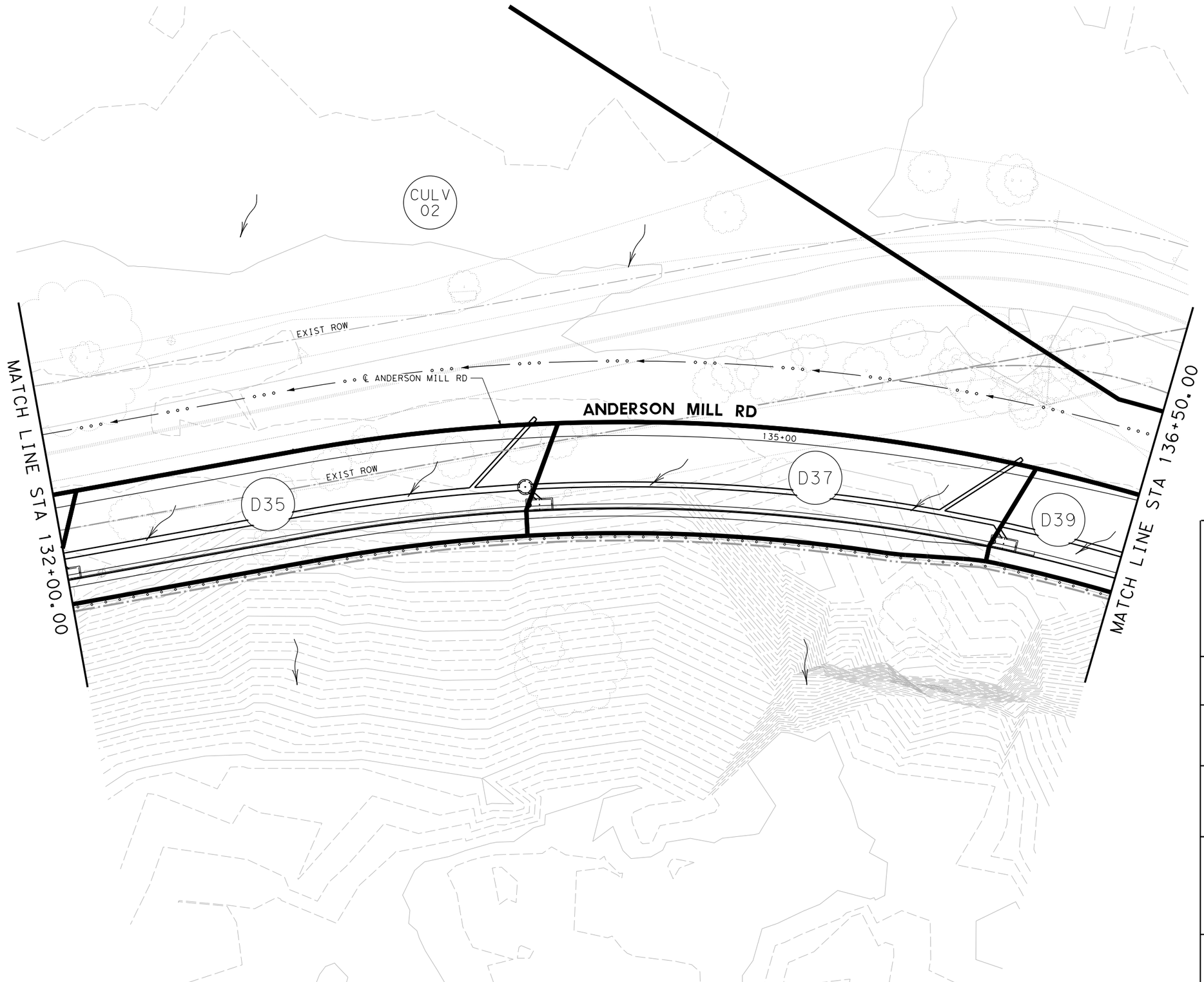

0' 10' 20' 40'
SCALE IN FEET

LEGEND

- EXISTING UTILITY
- EXISTING PLANIMETRICS
- DITCH FLOWLINE
- PROPOSED STORM SEWER
- EXISTING STORM SEWER
- DRAINAGE AREA BOUNDARY
- DRAINAGE FLOW DIRECTION
- XX — DRAINAGE AREA ID

NOTES:
1. SEE HYDRAULIC DATA SHEETS FOR DRAINAGE AREA CALCULATIONS.

STATE OF TEXAS
RILEY W. SLADEK
108887
LICENSED
PROFESSIONAL ENGINEER
10/4/2016

LJA Engineering, Inc.
FRN - F-1386

Binkley & Barfield, Inc
consulting engineers
Texas Registration Number F-257

CEDAR PARK

ANDERSON MILL RD
DRAINAGE AREAS
STA 132+00 - STA 136+50

DESIGN BY:	RS	SCALE:	1"=40'
DRAWN BY:	CM		
CHECKED BY:	DG	SHEET:	8 OF 18
APPROVED BY:	DG		
PROJECT NO:		PAGE:	104
DATE:	10/4/2016		

10/4/2016
3:10:46 PM
I:\1841\1402\CADD\SHEETS\NORTH\06-Drainage Details\NAMR*DA *08.dgn

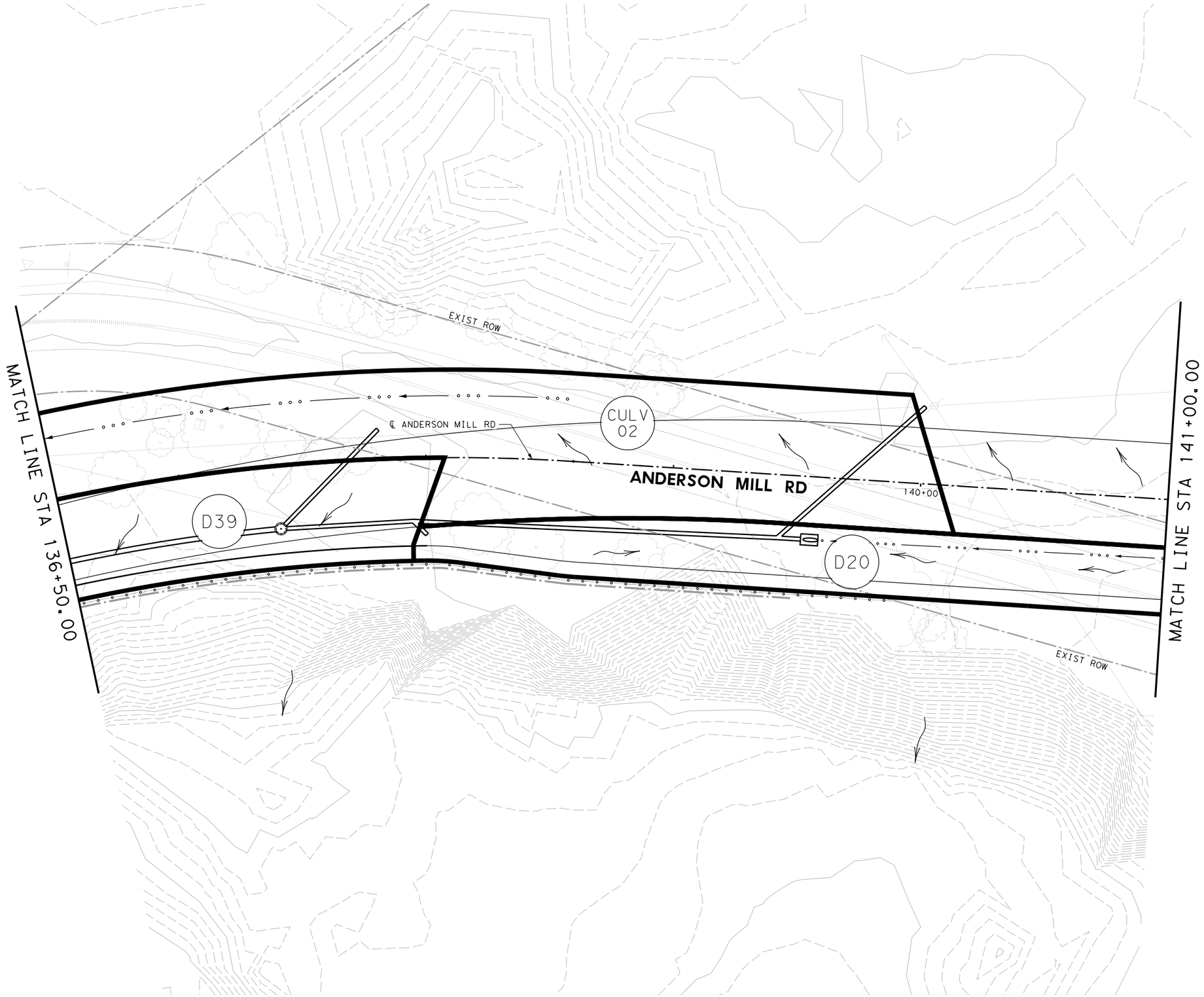

0' 10' 20' 40'
SCALE IN FEET

LEGEND

- EXISTING UTILITY
- EXISTING PLANIMETRICS
- DITCH FLOWLINE
- PROPOSED STORM SEWER
- EXISTING STORM SEWER
- DRAINAGE AREA BOUNDARY
- DRAINAGE FLOW DIRECTION
- XX — DRAINAGE AREA ID

NOTES:
1. SEE HYDRAULIC DATA SHEETS FOR DRAINAGE AREA CALCULATIONS.

STATE OF TEXAS
RILEY W. SLADEK
108887
LICENSED PROFESSIONAL ENGINEER
10/4/2016

LJA Engineering, Inc.
FRN - F-1386

Binkley & Barfield, Inc
consulting engineers
Texas Registration Number F-257

CEDAR PARK

ANDERSON MILL RD
DRAINAGE AREAS
STA 136+50 - STA 141+00

DESIGN BY:	RS	SCALE:	1"=40'
DRAWN BY:	CM		
CHECKED BY:	DG	SHEET:	9 OF 18
APPROVED BY:	DG		
PROJECT NO:		PAGE:	105
DATE:	10/4/2016		

10/4/2016
3:10:47 PM
i:\1841\1402\CADD\SHEETS\NORTH\06-Drainage Details\NAMR*DA *09.dgn

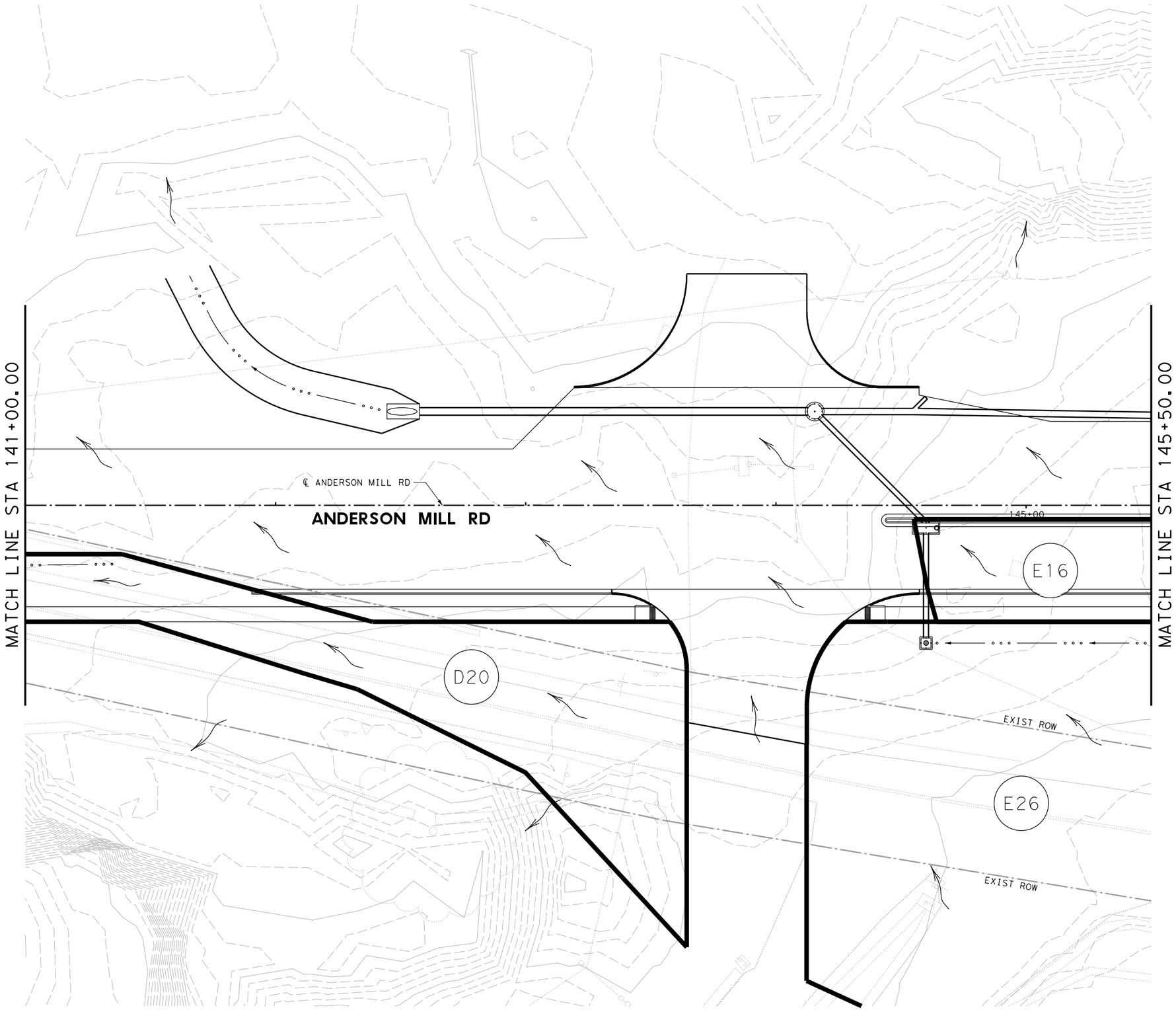

0′ 10′ 20′ 40′
SCALE IN FEET

LEGEND

- EXISTING UTILITY
- EXISTING PLANIMETRICS
- DITCH FLOWLINE
- PROPOSED STORM SEWER
- EXISTING STORM SEWER
- DRAINAGE AREA BOUNDARY
- DRAINAGE FLOW DIRECTION
- XX — DRAINAGE AREA ID

NOTES:
1. SEE HYDRAULIC DATA SHEETS FOR DRAINAGE AREA CALCULATIONS.

STATE OF TEXAS
RILEY W. SLADEK
108887
LICENSED PROFESSIONAL ENGINEER
10/4/2016

LJA Engineering, Inc.
FRN - F-1386

Binkley & Barfield, Inc
consulting engineers
Texas Registration Number F-257

CEDAR PARK

ANDERSON MILL RD
DRAINAGE AREAS
STA 141+00 - STA 145+50

DESIGN BY:	RS	SCALE:	1"=40′
DRAWN BY:	CM	SHEET: 10 OF 18	
CHECKED BY:	DG		
APPROVED BY:	DG		
PROJECT NO:		PAGE:	106
DATE:	10/4/2016		

10/4/2016
3:10:48 PM
I:\1841\1402\CADD\SHEETS\NORTH\06-Drainage Details\NAMR*DA *10.dgn

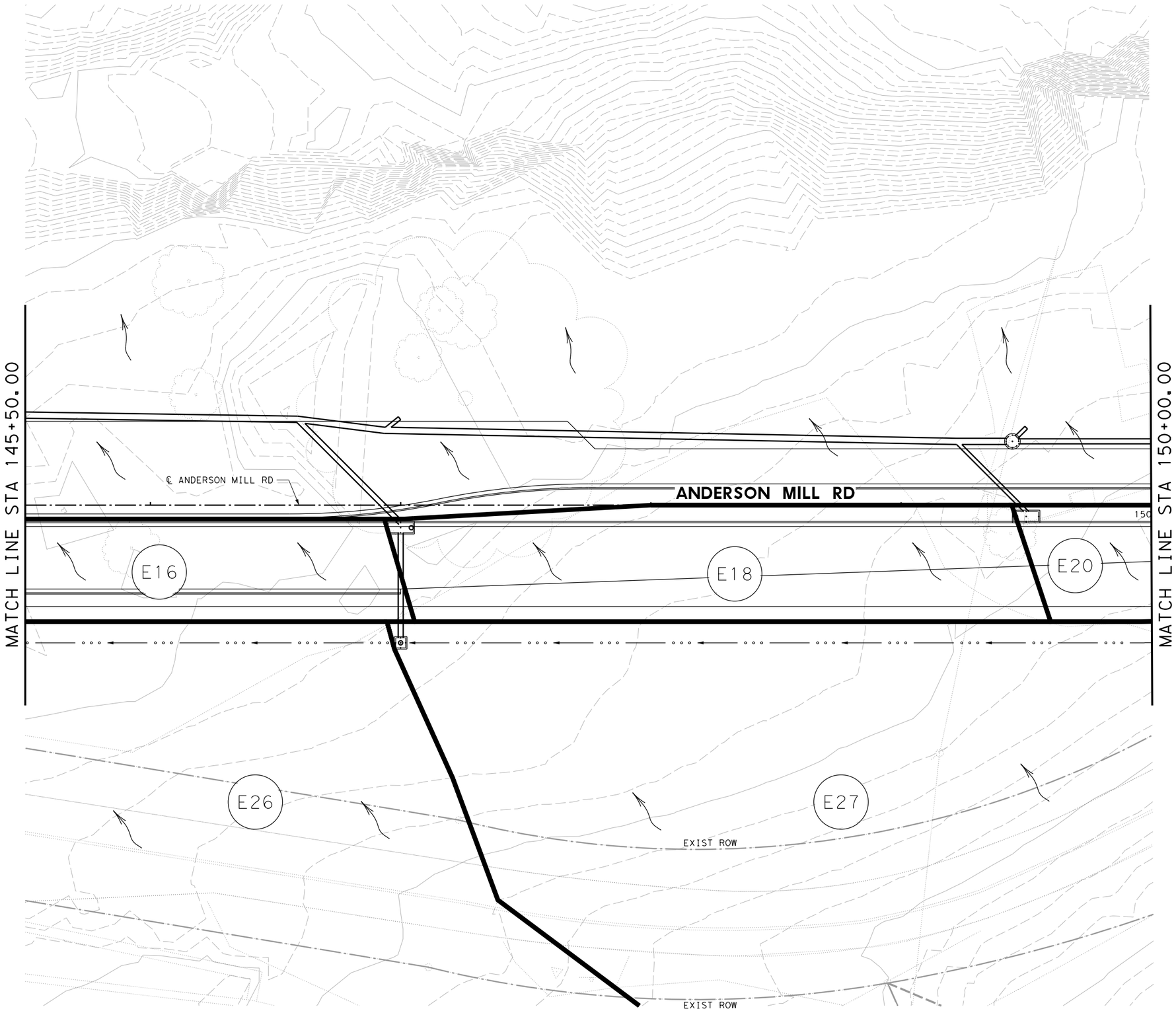

0′ 10′ 20′ 40′
SCALE IN FEET

LEGEND

- EXISTING UTILITY
- EXISTING PLANIMETRICS
- DITCH FLOWLINE
- PROPOSED STORM SEWER
- EXISTING STORM SEWER
- DRAINAGE AREA BOUNDARY
- DRAINAGE FLOW DIRECTION
- XX — DRAINAGE AREA ID

NOTES:
1. SEE HYDRAULIC DATA SHEETS FOR DRAINAGE AREA CALCULATIONS.

STATE OF TEXAS
RILEY W. SLADEK
108887
LICENSED
PROFESSIONAL ENGINEER
10/4/2016

LJA Engineering, Inc.
FRN - F-1386

Binkley & Barfield, Inc
consulting engineers
Texas Registration Number F-257

CEDAR PARK

ANDERSON MILL RD
DRAINAGE AREAS
STA 145+50 - STA 150+00

DESIGN BY:	RS	SCALE:	1"=40′
DRAWN BY:	CM		
CHECKED BY:	DG	SHEET:	11 OF 18
APPROVED BY:	DG		
PROJECT NO:		PAGE:	107
DATE:	10/4/2016		

10/4/2016
3:10:49 PM
I:\1841\1402\CADD\SHEETS\NORTH\06-Drainage Details\NAMR*DA *11.dgn

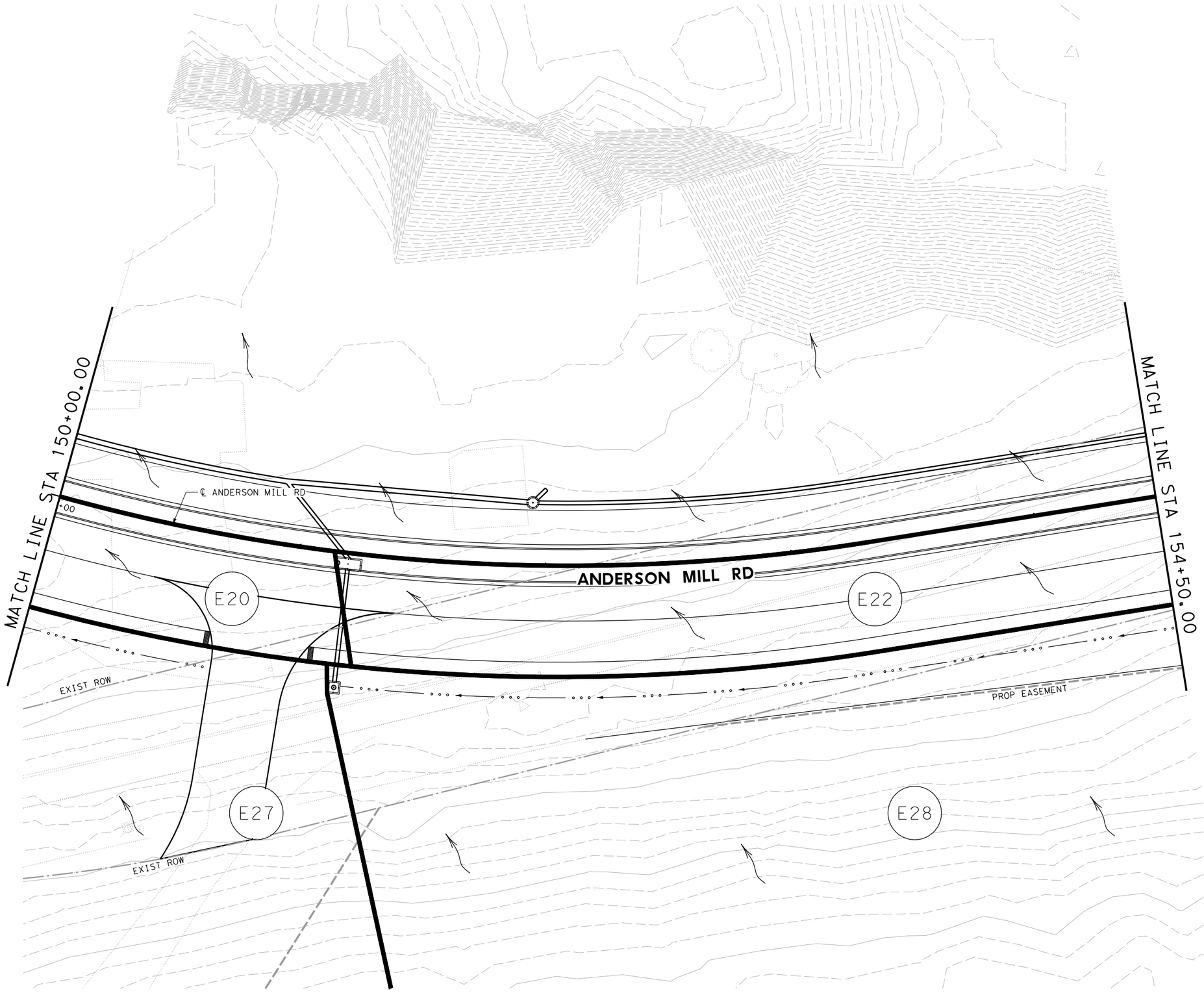

0' 10' 20' 40'
SCALE IN FEET

LEGEND

- EXISTING UTILITY
- EXISTING PLANIMETRICS
- DITCH FLOWLINE
- PROPOSED STORM SEWER
- EXISTING STORM SEWER
- DRAINAGE AREA BOUNDARY
- DRAINAGE FLOW DIRECTION
- XX — DRAINAGE AREA ID

NOTES:
1. SEE HYDRAULIC DATA SHEETS FOR DRAINAGE AREA CALCULATIONS.

STATE OF TEXAS
RILEY W. SLADEK
108887
LICENSED
PROFESSIONAL ENGINEER
10/4/2016

LJA Engineering, Inc.
FRN - F-1386

Binkley & Barfield, Inc
consulting engineers
Texas Registration Number F-257

CEDAR PARK

ANDERSON MILL RD
DRAINAGE AREAS
STA 150+00 - STA 154+50

DESIGN BY:	RS	SCALE:	1"=40'
DRAWN BY:	CM		
CHECKED BY:	DG	SHEET:	12 OF 18
APPROVED BY:	DG		
PROJECT NO:		PAGE:	108
DATE:	10/4/2016		

10/4/2016
3:10:49 PM
I:\1841\1402\CADD\SHEETS\NORTH\06-Drainage Details\NAMR*DA *12.dgn

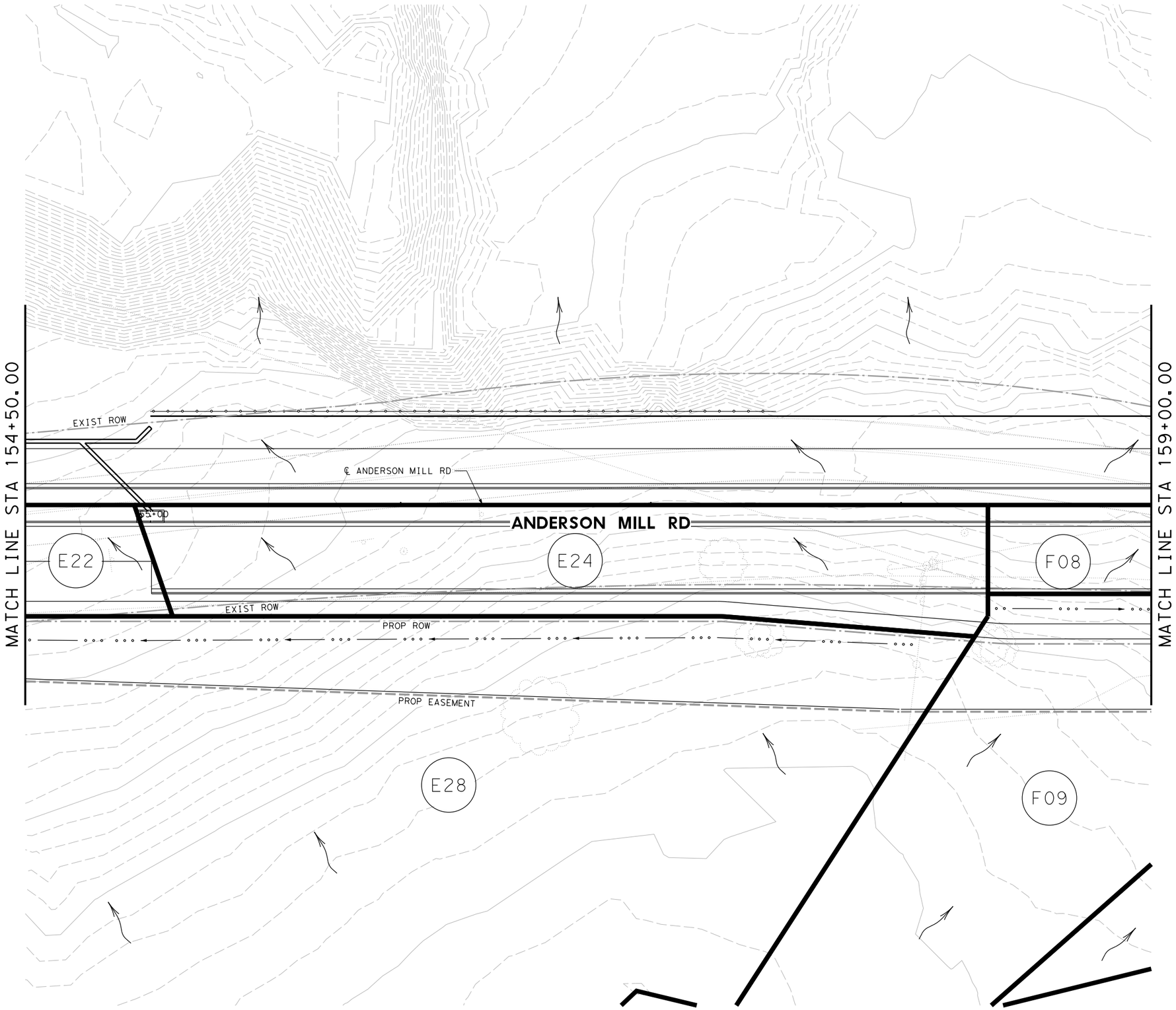

0′ 10′ 20′ 40′
SCALE IN FEET

LEGEND

- EXISTING UTILITY
- EXISTING PLANIMETRICS
- DITCH FLOWLINE
- PROPOSED STORM SEWER
- EXISTING STORM SEWER
- DRAINAGE AREA BOUNDARY
- DRAINAGE FLOW DIRECTION
- XX — DRAINAGE AREA ID

NOTES:
1. SEE HYDRAULIC DATA SHEETS FOR DRAINAGE AREA CALCULATIONS.

STATE OF TEXAS
RILEY W. SLADEK
108887
LICENSED PROFESSIONAL ENGINEER
10/4/2016

LJA Engineering, Inc.
FRN - F-1386

Binkley & Barfield, Inc
consulting engineers
Texas Registration Number F-257

CEDAR PARK

ANDERSON MILL RD
DRAINAGE AREAS
STA 154+50 - STA 159+00

DESIGN BY:	RS	SCALE:	1"=40′
DRAWN BY:	CM		
CHECKED BY:	DG	SHEET:	13 OF 18
APPROVED BY:	DG		
PROJECT NO:			
DATE:	10/4/2016	PAGE:	109

10/4/2016
3:10:50 PM
I:\1841\1402\CADD\SHEETS\NORTH\06-Drainage Details\NAMR*DA *13.dgn

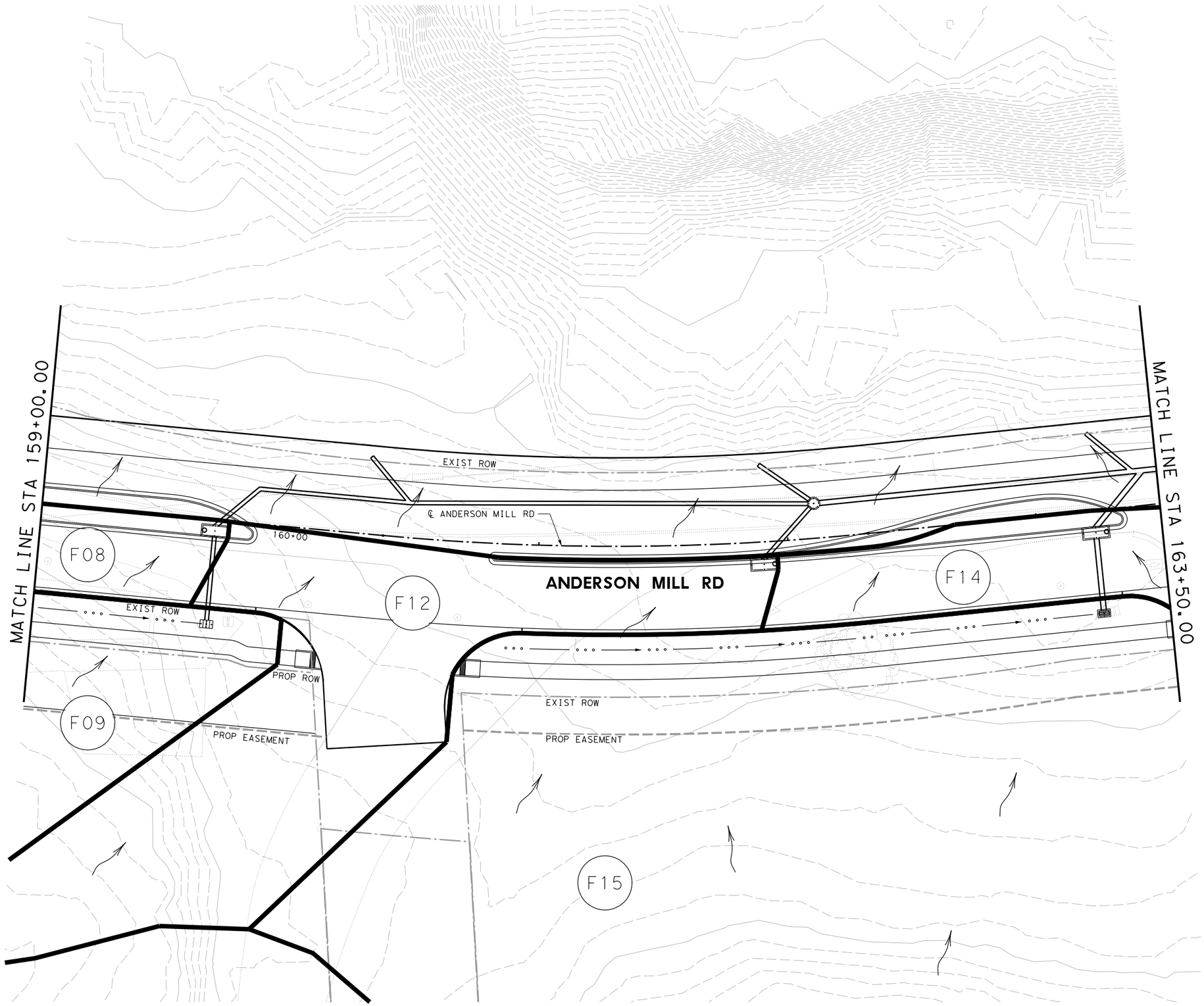

0' 10' 20' 40'
SCALE IN FEET

LEGEND

- EXISTING UTILITY
- EXISTING PLANIMETRICS
- DITCH FLOWLINE
- PROPOSED STORM SEWER
- EXISTING STORM SEWER
- DRAINAGE AREA BOUNDARY
- DRAINAGE FLOW DIRECTION
- XX — DRAINAGE AREA ID

NOTES:
1. SEE HYDRAULIC DATA SHEETS FOR DRAINAGE AREA CALCULATIONS.

STATE OF TEXAS
RILEY W. SLADEK
108887
LICENSED PROFESSIONAL ENGINEER
10/4/2016

LJA Engineering, Inc.
FRN - F-1386

Binkley & Barfield, Inc
consulting engineers
Texas Registration Number F-257

CEDAR PARK

ANDERSON MILL RD
DRAINAGE AREAS
STA 159+00 - STA 163+50

DESIGN BY:	RS	SCALE:	1"=40'
DRAWN BY:	CM		
CHECKED BY:	DG	SHEET: 14 OF 18	
APPROVED BY:	DG		
PROJECT NO:		PAGE: 110	
DATE:	10/4/2016		

10/4/2016
3:10:51 PM
I:\1841\1402\CADD\SHEETS\NORTH\06-Drainage Details\NAMR*DA *14.dgn

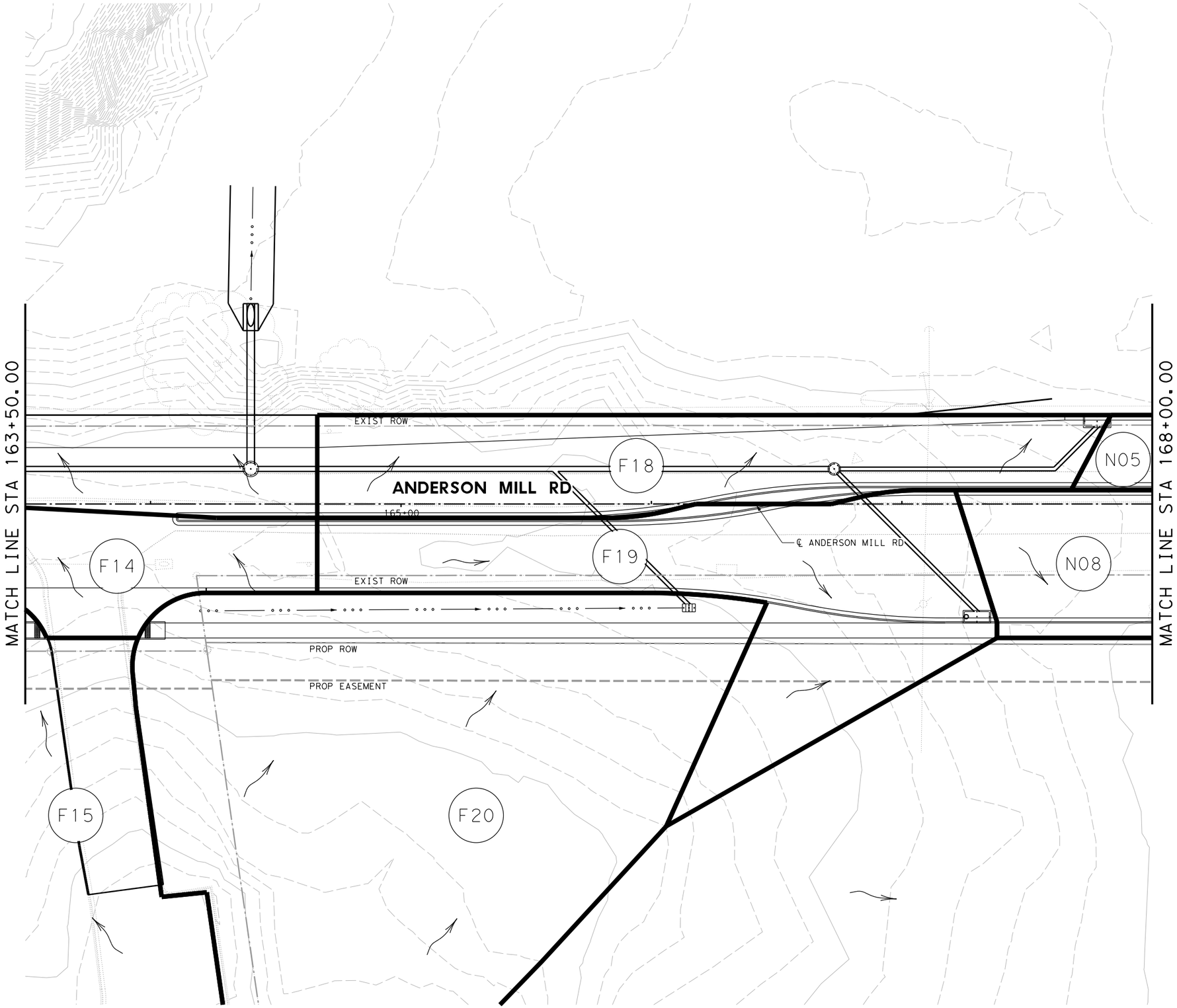

0' 10' 20' 40'
SCALE IN FEET

LEGEND

- EXISTING UTILITY
- EXISTING PLANIMETRICS
- DITCH FLOWLINE
- PROPOSED STORM SEWER
- EXISTING STORM SEWER
- DRAINAGE AREA BOUNDARY
- DRAINAGE FLOW DIRECTION
- XX — DRAINAGE AREA ID

NOTES:
1. SEE HYDRAULIC DATA SHEETS FOR DRAINAGE AREA CALCULATIONS.

STATE OF TEXAS
RILEY W. SLADEK
108887
LICENSED
PROFESSIONAL ENGINEER
10/4/2016

LJA Engineering, Inc.
FRN - F-1386

Binkley & Barfield, Inc
consulting engineers
Texas Registration Number F-257

CEDAR PARK

ANDERSON MILL RD
DRAINAGE AREAS
STA 163+50 - STA 168+00

DESIGN BY:	RS	SCALE:	1"=40'
DRAWN BY:	CM		
CHECKED BY:	DG	SHEET: 15 OF 18	
APPROVED BY:	DG		
PROJECT NO:		PAGE: 111	
DATE:	10/4/2016		

10/4/2016
3:10:52 PM
I:\1841\1402\CADD\SHEETS\NORTH\06-Drainage Details\NAMR*DA *15.dgn

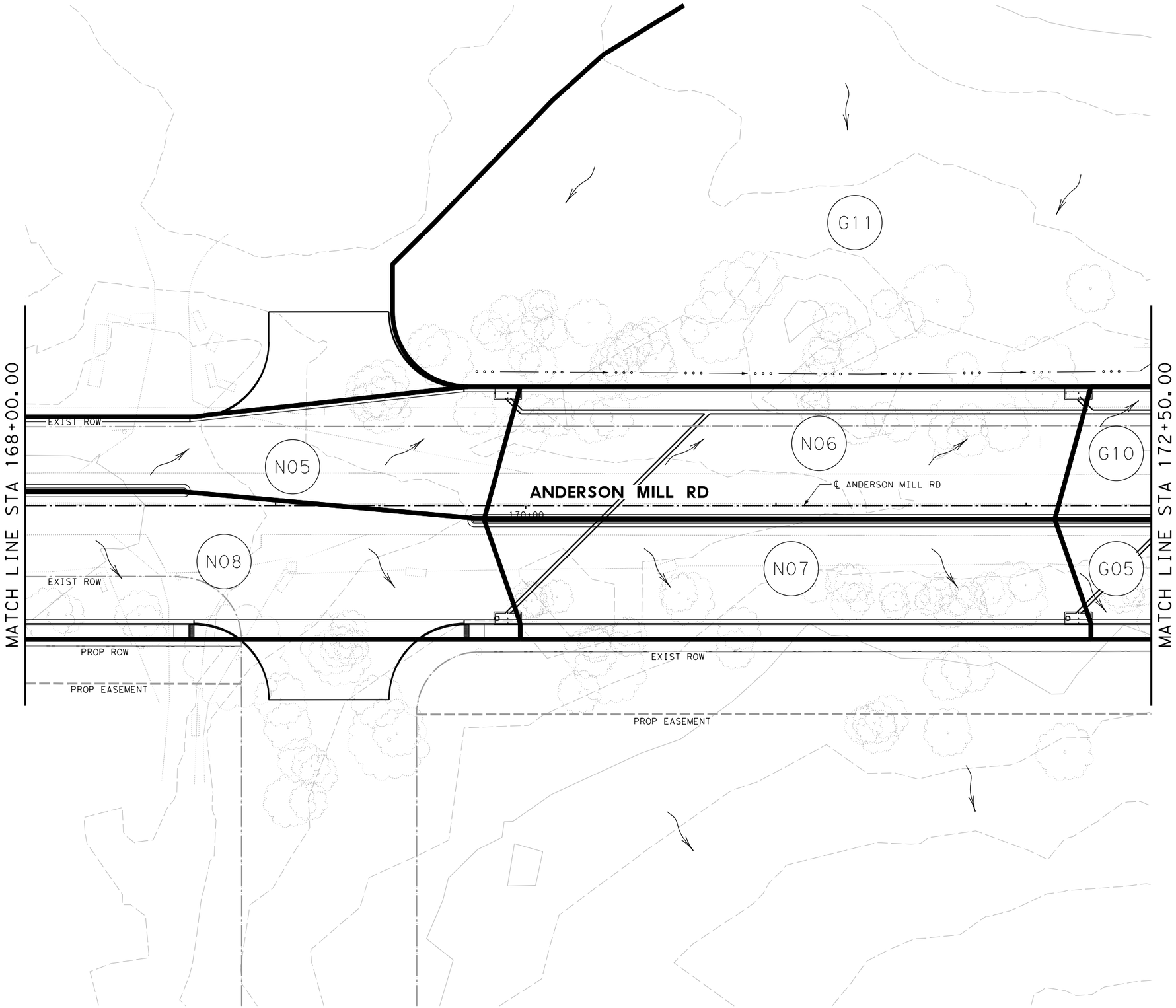

0' 10' 20' 40'
SCALE IN FEET

LEGEND

- EXISTING UTILITY
- EXISTING PLANIMETRICS
- DITCH FLOWLINE
- PROPOSED STORM SEWER
- EXISTING STORM SEWER
- DRAINAGE AREA BOUNDARY
- DRAINAGE FLOW DIRECTION
- XX — DRAINAGE AREA ID

NOTES:
1. SEE HYDRAULIC DATA SHEETS FOR DRAINAGE AREA CALCULATIONS.

STATE OF TEXAS
RILEY W. SLADEK
108887
LICENSED
PROFESSIONAL ENGINEER
10/4/2016

LJA Engineering, Inc.
FRN - F-1386

Binkley & Barfield, Inc
consulting engineers
Texas Registration Number F-257

CEDAR PARK

ANDERSON MILL RD
DRAINAGE AREAS
STA 168+00 - STA 172+50

DESIGN BY:	RS	SCALE:	1"=40'
DRAWN BY:	CM		
CHECKED BY:	DG	SHEET: 16 OF 18	
APPROVED BY:	DG		
PROJECT NO:		PAGE: 112	
DATE:	10/4/2016		

10/4/2016
3:10:53 PM
I:\1841\1402\CADD\SHEETS\NORTH\06-Drainage Details\NAMR*DA *16.dgn

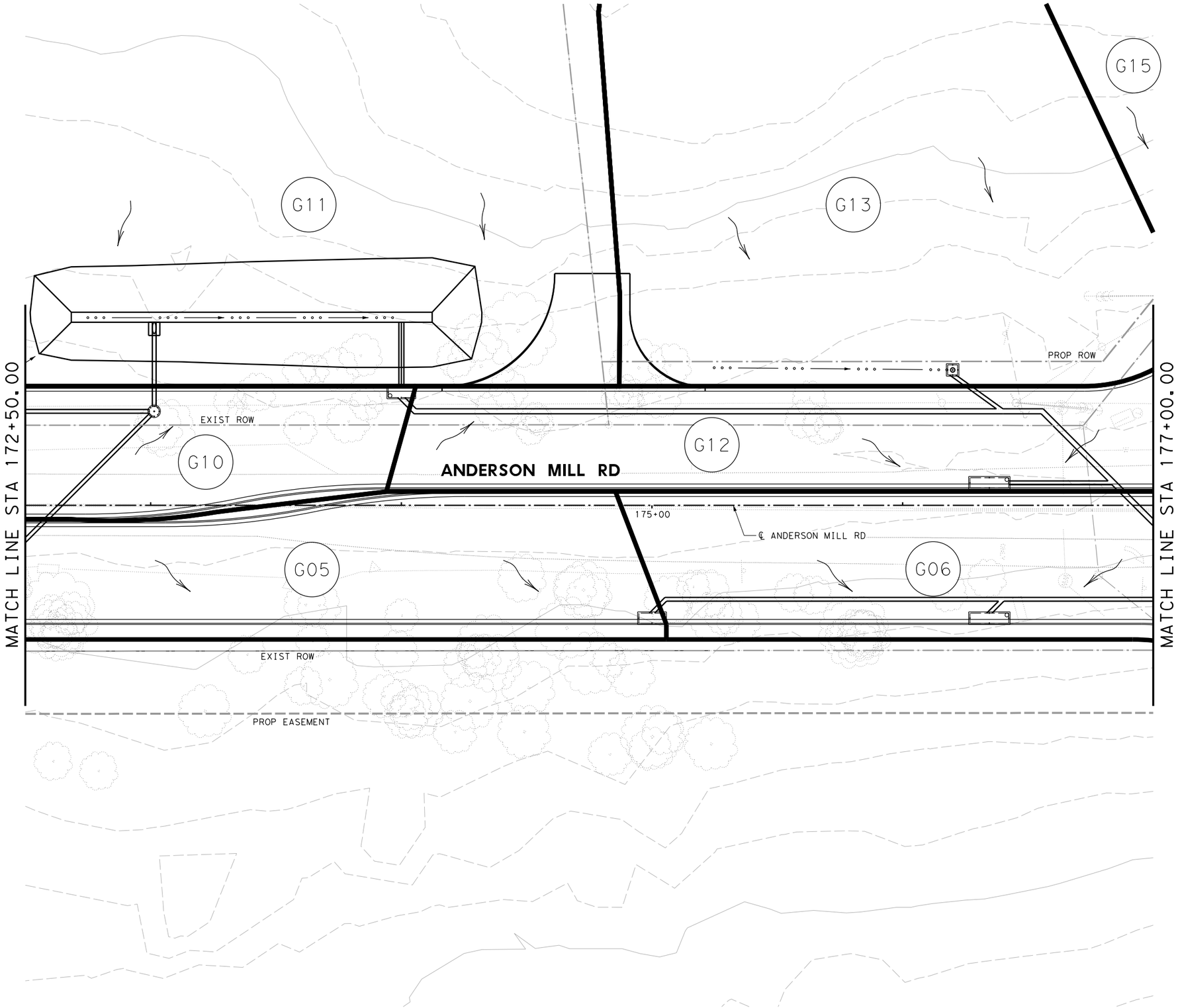

0' 10' 20' 40'
SCALE IN FEET

LEGEND

- EXISTING UTILITY
- EXISTING PLANIMETRICS
- DITCH FLOWLINE
- PROPOSED STORM SEWER
- EXISTING STORM SEWER
- DRAINAGE AREA BOUNDARY
- DRAINAGE FLOW DIRECTION
- XX — DRAINAGE AREA ID

NOTES:
1. SEE HYDRAULIC DATA SHEETS FOR DRAINAGE AREA CALCULATIONS.

STATE OF TEXAS
RILEY W. SLADEK
108887
LICENSED
PROFESSIONAL ENGINEER
10/4/2016

LJA Engineering, Inc.
FRN - F-1386

Binkley & Barfield, Inc
consulting engineers
Texas Registration Number F-257

CEDAR PARK

ANDERSON MILL RD
DRAINAGE AREAS
STA 172+50 - STA 177+00

DESIGN BY:	RS	SCALE:	1"=40'
DRAWN BY:	CM		
CHECKED BY:	DG	SHEET:	17 OF 18
APPROVED BY:	DG		
PROJECT NO:		PAGE:	113
DATE:	10/4/2016		

10/4/2016
3:10:54 PM
I:\1841\1402\CADD\SHEETS\NORTH\06-Drainage Details\NAMR*DA *17.dgn

0' 10' 20' 40'
SCALE IN FEET

LEGEND

- EXISTING UTILITY
- EXISTING PLANIMETRICS
- DITCH FLOWLINE
- PROPOSED STORM SEWER
- EXISTING STORM SEWER
- DRAINAGE AREA BOUNDARY
- DRAINAGE FLOW DIRECTION
- XX — DRAINAGE AREA ID

NOTES:
1. SEE HYDRAULIC DATA SHEETS FOR DRAINAGE AREA CALCULATIONS.

STATE OF TEXAS
RILEY W. SLADEK
108887
LICENSED
PROFESSIONAL ENGINEER
10/4/2016

LJA Engineering, Inc.
FRN - F-1386

Binkley & Barfield, Inc
consulting engineers
Texas Registration Number F-257

CEDAR PARK

ANDERSON MILL RD
DRAINAGE AREAS
STA 177+00 - END

DESIGN BY:	RS	SCALE:	1"=40'
DRAWN BY:	CM		
CHECKED BY:	DG	SHEET:	18 OF 18
APPROVED BY:	DG		
PROJECT NO:		PAGE:	114
DATE:	10/4/2016		

10/4/2016
3:10:55 PM
I:\1841\1402\CADD\SHEETS\NORTH\06-Drainage Details\NAMR*DA *18.dgn

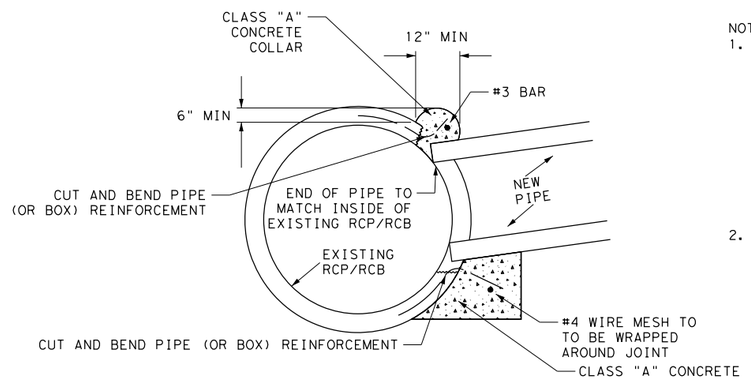

CONNECTION TO EXISTING STORM DRAIN DETAIL
NTS

NOTES:
1. REMOVAL OF PLUG FROM EXISTING DIAMETER RCP TO BE ACCOMPLISHED BY USING A MASONRY DRILL AT A SPACING EQUAL TO THE DRILL BIT DIAMETER IN A CIRCULAR PATTERN OR A MASONRY SAW IN AN OCTAGONAL PATTERN PER DETAIL.

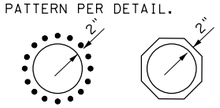

2. COST OF CONCRETE & STEEL TO BE SUBSIDIARY TO STORMSEWER PIPE

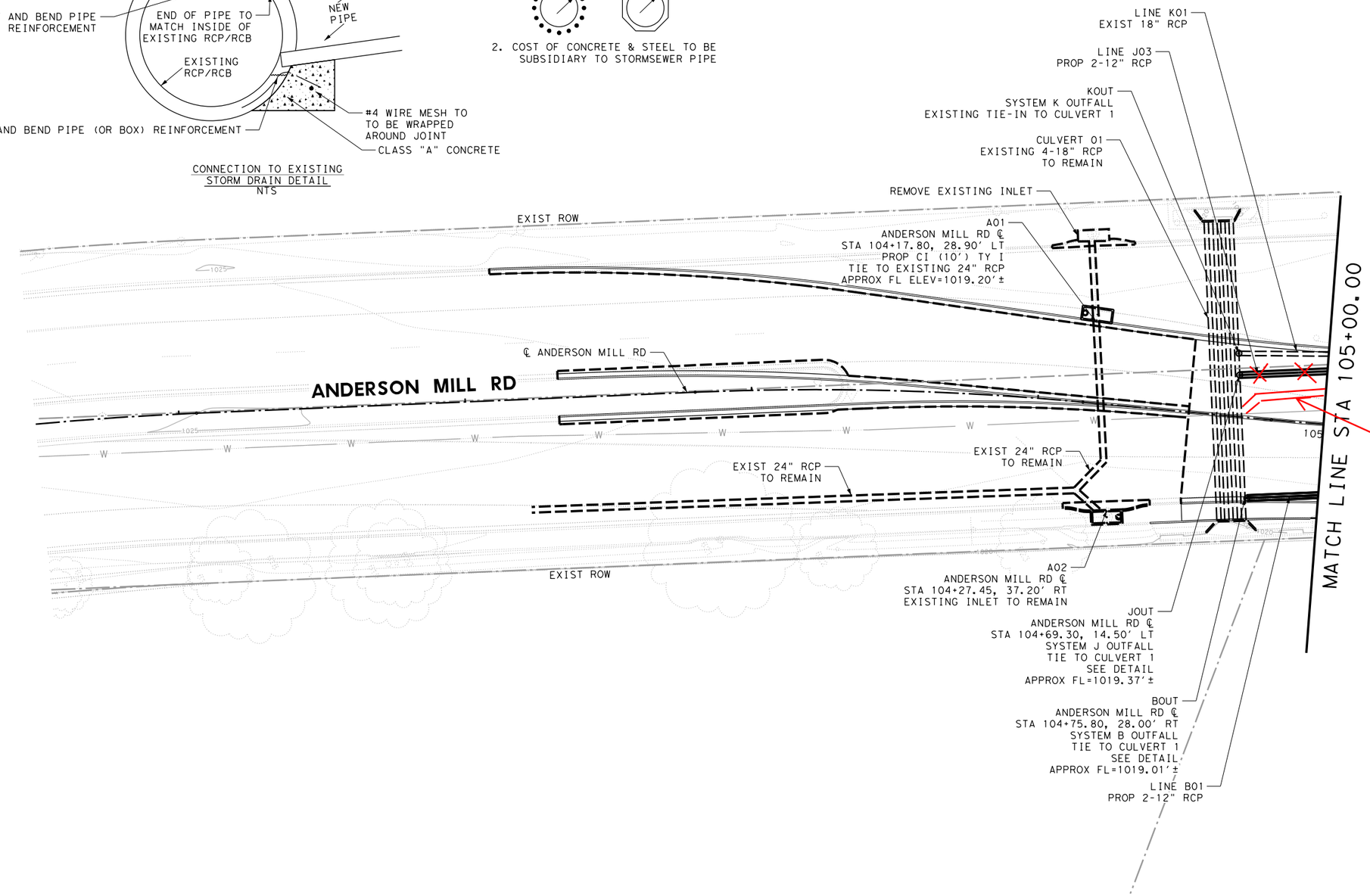

0' 10' 20' 40'
SCALE IN FEET

LEGEND

- EXISTING UTILITY
- EXISTING PLANIMETRICS
- DITCH FLOWLINE
- PROPOSED STORM SEWER
- EXISTING STORM SEWER

NOTES:
1. CURB INLETS MEASURED FROM TOP FACE OF CURB.
2. GRATE INLETS MEASURED FROM TOP CENTER OF GRATE.
3. THE MATERIAL AND CONSTRUCTION PRACTICES SHALL BE IN ACCORDANCE WITH THE STANDARD SPECIFICATIONS OF THE CITY OF CEDAR PARK, CITY OF AUSTIN, AND TXDOT (WHERE APPLICABLE) AS PRESENTED IN THE LATEST EDITION, AND/OR AS OTHERWISE CONTAINED ON THE PLANS.

NOTE:
CONTRACTOR TO VERIFY LOCATION AND ELEVATION OF EXISTING STRUCTURES PRIOR TO PROCEEDING WITH THE WORK. ANY DISCREPANCIES CAUSING MATERIAL CHANGES SHALL BE SENT VIA R.F.I. TO THE CITY'S REPRESENTATIVE.

STATE OF TEXAS
RILEY W. SLADEK
108887
LICENSED PROFESSIONAL ENGINEER
10/4/2016

LJA Engineering, Inc.
FRN - F-1386

Binkley & Barfield, Inc
consulting engineers
Texas Registration Number F-257

CEDAR PARK

ANDERSON MILL RD
DRAINAGE PLAN SHEETS
BEGIN - STA 105+00

DESIGN BY:	RS	SCALE:	1"=40'
DRAWN BY:	CM		
CHECKED BY:	DG	SHEET:	1 OF 18
APPROVED BY:	DG		
PROJECT NO:		PAGE:	115
DATE:	10/4/2016		

10/4/2016
3:10:58 PM
I:\1841\1402\CADD\SHEETS\NORTH\06-Drainage Details\NAMR*DRN*01.dgn

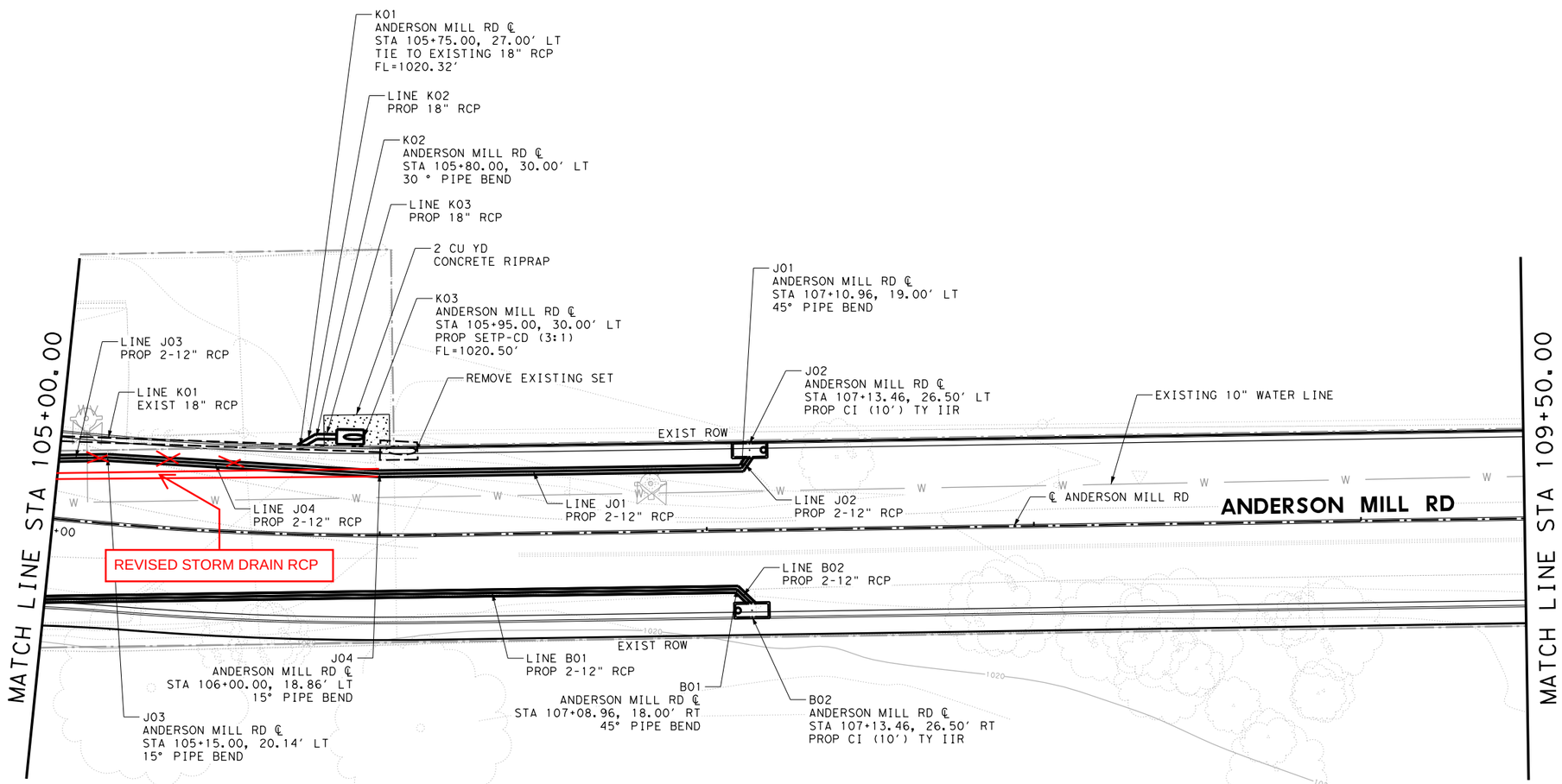

0' 10' 20' 40'
SCALE IN FEET

LEGEND

- EXISTING UTILITY
- EXISTING PLANIMETRICS
- DITCH FLOWLINE
- PROPOSED STORM SEWER
- EXISTING STORM SEWER

NOTES:
1. CURB INLETS MEASURED FROM TOP FACE OF CURB.
2. GRATE INLETS MEASURED FROM TOP CENTER OF GRATE.
3. THE MATERIAL AND CONSTRUCTION PRACTICES SHALL BE IN ACCORDANCE WITH THE STANDARD SPECIFICATIONS OF THE CITY OF CEDAR PARK, CITY OF AUSTIN, AND TXDOT (WHERE APPLICABLE) AS PRESENTED IN THE LATEST EDITION, AND/OR AS OTHERWISE CONTAINED ON THE PLANS.

STATE OF TEXAS
RILEY W. SLADEK
108887
LICENSED PROFESSIONAL ENGINEER
10/4/2016

LJA Engineering, Inc.
FRN - F-1386

Binkley & Barfield, Inc
consulting engineers
Texas Registration Number F-257

CEDAR PARK

ANDERSON MILL RD
DRAINAGE PLAN SHEETS
STA 105+00 - STA 109+50

DESIGN BY:	RS	SCALE:	1"=40'
DRAWN BY:	CM		
CHECKED BY:	DG	SHEET:	2 OF 18
APPROVED BY:	DG		
PROJECT NO:		PAGE:	116
DATE:	10/4/2016		

10/4/2016
3:10:59 PM
I:\1841\1402\CADD\SHEETS\NORTH\06-Drainage Details\NAMR*DRN*02.dgn

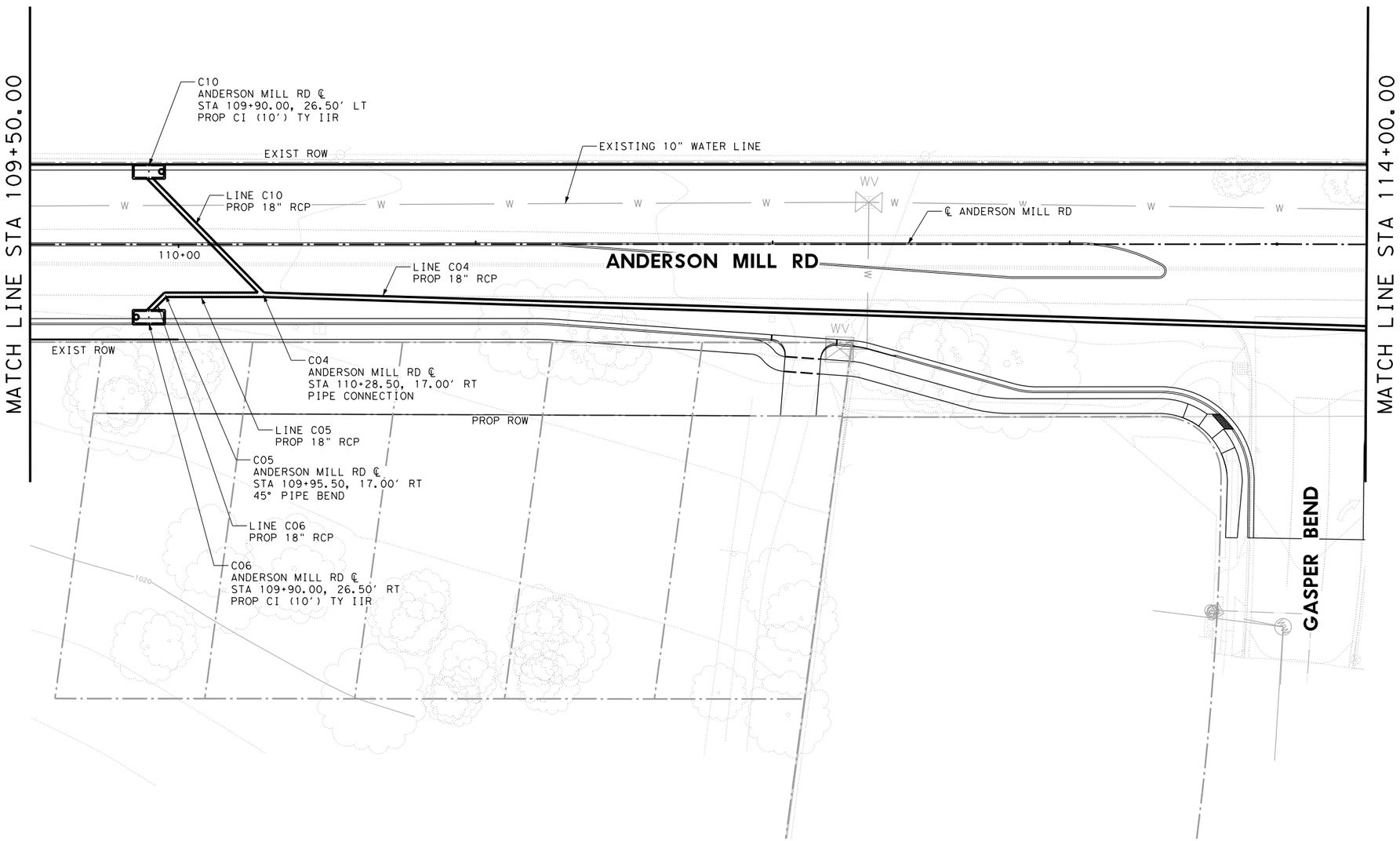

0' 10' 20' 40'
SCALE IN FEET

LEGEND

- EXISTING UTILITY
- EXISTING PLANIMETRICS
- DITCH FLOWLINE
- PROPOSED STORM SEWER
- EXISTING STORM SEWER

NOTES:
1. CURB INLETS MEASURED FROM TOP FACE OF CURB.
2. GRATE INLETS MEASURED FROM TOP CENTER OF GRATE.
3. THE MATERIAL AND CONSTRUCTION PRACTICES SHALL BE IN ACCORDANCE WITH THE STANDARD SPECIFICATIONS OF THE CITY OF CEDAR PARK, CITY OF AUSTIN, AND TXDOT (WHERE APPLICABLE) AS PRESENTED IN THE LATEST EDITION, AND/OR AS OTHERWISE CONTAINED ON THE PLANS.

STATE OF TEXAS
RILEY W. SLADEK
108887
LICENSED PROFESSIONAL ENGINEER
10/4/2016

LJA Engineering, Inc.
FRN - F-1386

Binkley & Barfield, Inc
consulting engineers
Texas Registration Number F-257

CEDAR PARK

ANDERSON MILL RD
DRAINAGE PLAN SHEETS
STA 109+50 - STA 114+00

DESIGN BY:	RS	SCALE:	1"=40'
DRAWN BY:	CM		
CHECKED BY:	DG	SHEET:	3 OF 18
APPROVED BY:	DG		
PROJECT NO:			
DATE:	10/4/2016	PAGE:	117

10/4/2016
3:11:00 PM
I:\1841\1402\CADD\SHEETS\NORTH\06-Drainage Details\NAMR*DRN*03.dgn

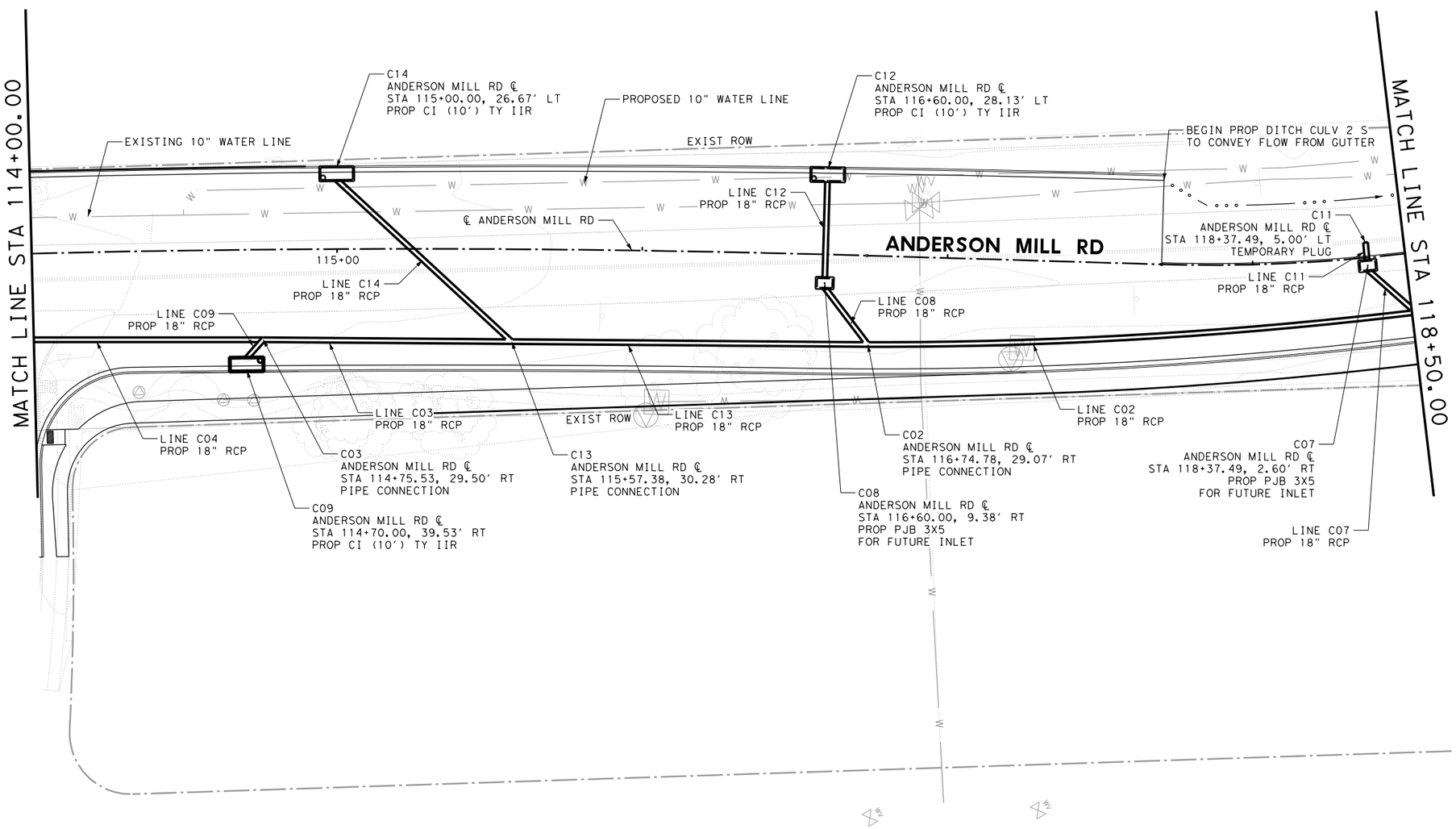

0′ 10′ 20′ 40′
SCALE IN FEET

LEGEND

- EXISTING UTILITY
- EXISTING PLANIMETRICS
- DITCH FLOWLINE
- PROPOSED STORM SEWER
- EXISTING STORM SEWER

NOTES:
1. CURB INLETS MEASURED FROM TOP FACE OF CURB.
2. GRATE INLETS MEASURED FROM TOP CENTER OF GRATE.
3. THE MATERIAL AND CONSTRUCTION PRACTICES SHALL BE IN ACCORDANCE WITH THE STANDARD SPECIFICATIONS OF THE CITY OF CEDAR PARK, CITY OF AUSTIN, AND TXDOT (WHERE APPLICABLE) AS PRESENTED IN THE LATEST EDITION, AND/OR AS OTHERWISE CONTAINED ON THE PLANS.

STATE OF TEXAS
RILEY W. SLADEK
108887
LICENSED PROFESSIONAL ENGINEER
10/4/2016

LJA Engineering, Inc.
FRN - F-1386

Binkley & Barfield, Inc
consulting engineers
Texas Registration Number F-257

CEDAR PARK

ANDERSON MILL RD
DRAINAGE PLAN SHEETS
STA 114+00 - STA 118+50

DESIGN BY:	RS	SCALE:	1"=40′
DRAWN BY:	CM		
CHECKED BY:	DG	SHEET:	4 OF 18
APPROVED BY:	DG		
PROJECT NO:		PAGE:	118
DATE:	10/4/2016		

10/4/2016
3:11:01 PM
I:\1841\1402\CADD\SHEETS\NORTH\06-Drainage Details\NAMR*DRN*04.dgn

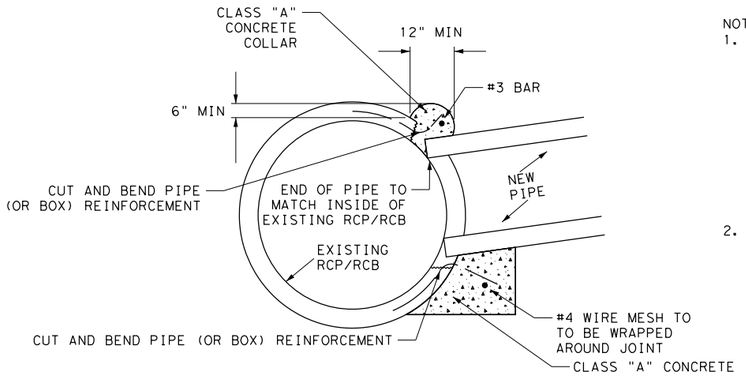

CONNECTION TO EXISTING STORM DRAIN DETAIL
NTS

NOTES:
1. REMOVAL OF PLUG FROM EXISTING DIAMETER RCP TO BE ACCOMPLISHED BY USING A MASONRY DRILL AT A SPACING EQUAL TO THE DRILL BIT DIAMETER IN A CIRCULAR PATTERN OR A MASONRY SAW IN AN OCTAGONAL PATTERN PER DETAIL.

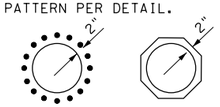

2. COST OF CONCRETE & STEEL TO BE SUBSIDIARY TO STORMSEWER PIPE

0' 10' 20' 40'
SCALE IN FEET

LEGEND
- EXISTING UTILITY
- EXISTING PLANIMETRICS
- DITCH FLOWLINE
- PROPOSED STORM SEWER
- EXISTING STORM SEWER

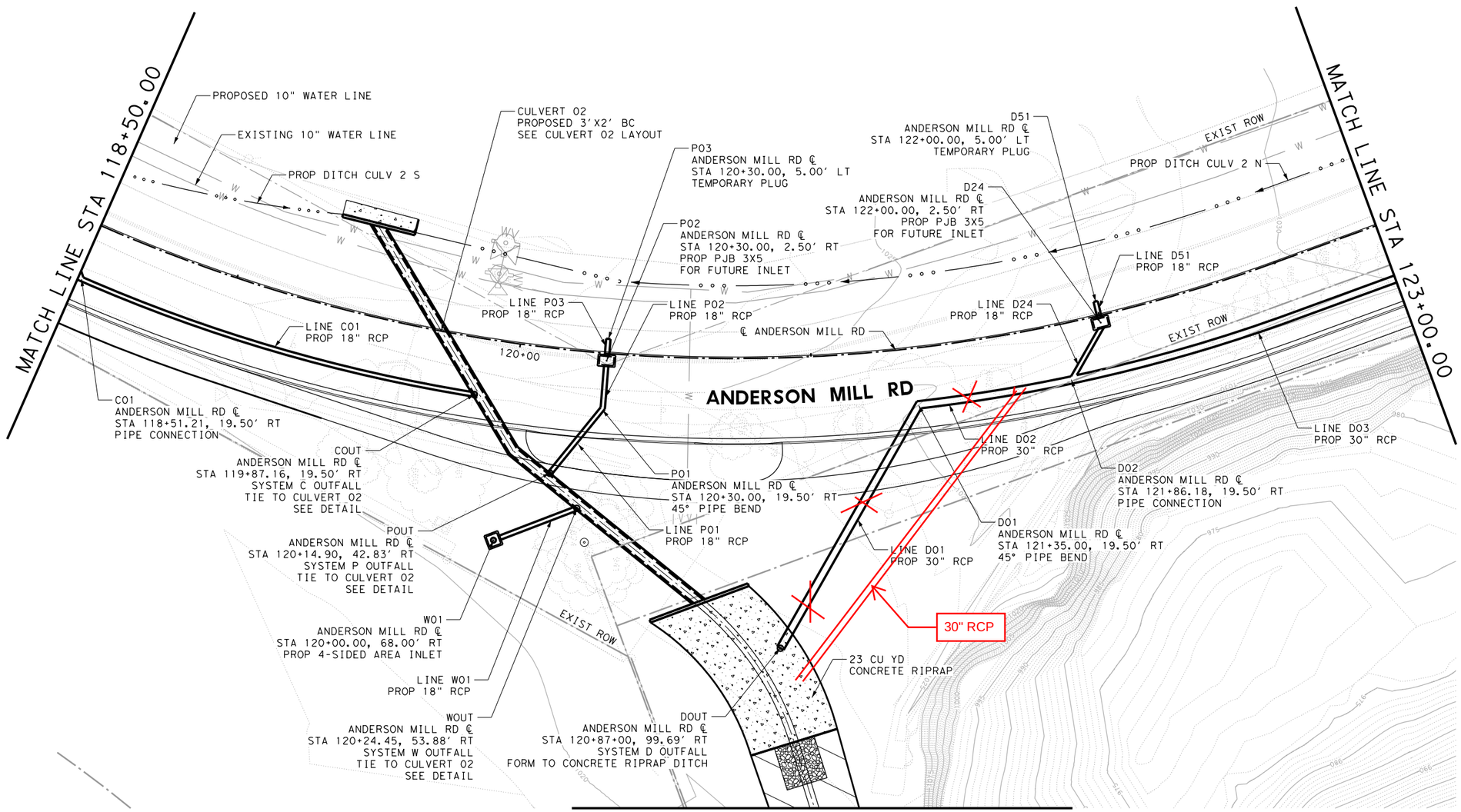

SEE CULVERT 02 DITCH DETAIL SHEET

NOTES:
1. CURB INLETS MEASURED FROM TOP FACE OF CURB.
2. GRATE INLETS MEASURED FROM TOP CENTER OF GRATE.
3. THE MATERIAL AND CONSTRUCTION PRACTICES SHALL BE IN ACCORDANCE WITH THE STANDARD SPECIFICATIONS OF THE CITY OF CEDAR PARK, CITY OF AUSTIN, AND TXDOT (WHERE APPLICABLE) AS PRESENTED IN THE LATEST EDITION, AND/OR AS OTHERWISE CONTAINED ON THE PLANS.

STATE OF TEXAS
RILEY W. SLADEK
108887
LICENSED PROFESSIONAL ENGINEER
10/4/2016

LJA Engineering, Inc.
FRN - F-1386

Binkley & Barfield, Inc
consulting engineers
Texas Registration Number F-257

CEDAR PARK

ANDERSON MILL RD
DRAINAGE PLAN SHEETS
STA 118+50 - STA 123+00

DESIGN BY:	RS	SCALE:	1"=40'
DRAWN BY:	CM		
CHECKED BY:	DG	SHEET:	5 OF 18
APPROVED BY:	DG		
PROJECT NO:			
DATE:	10/4/2016	PAGE:	119

10/4/2016
3:11:02 PM
I:\1841\1402\CADD\SHEETS\NORTH\06-Drainage Details\NAMR*DRN*05.dgn

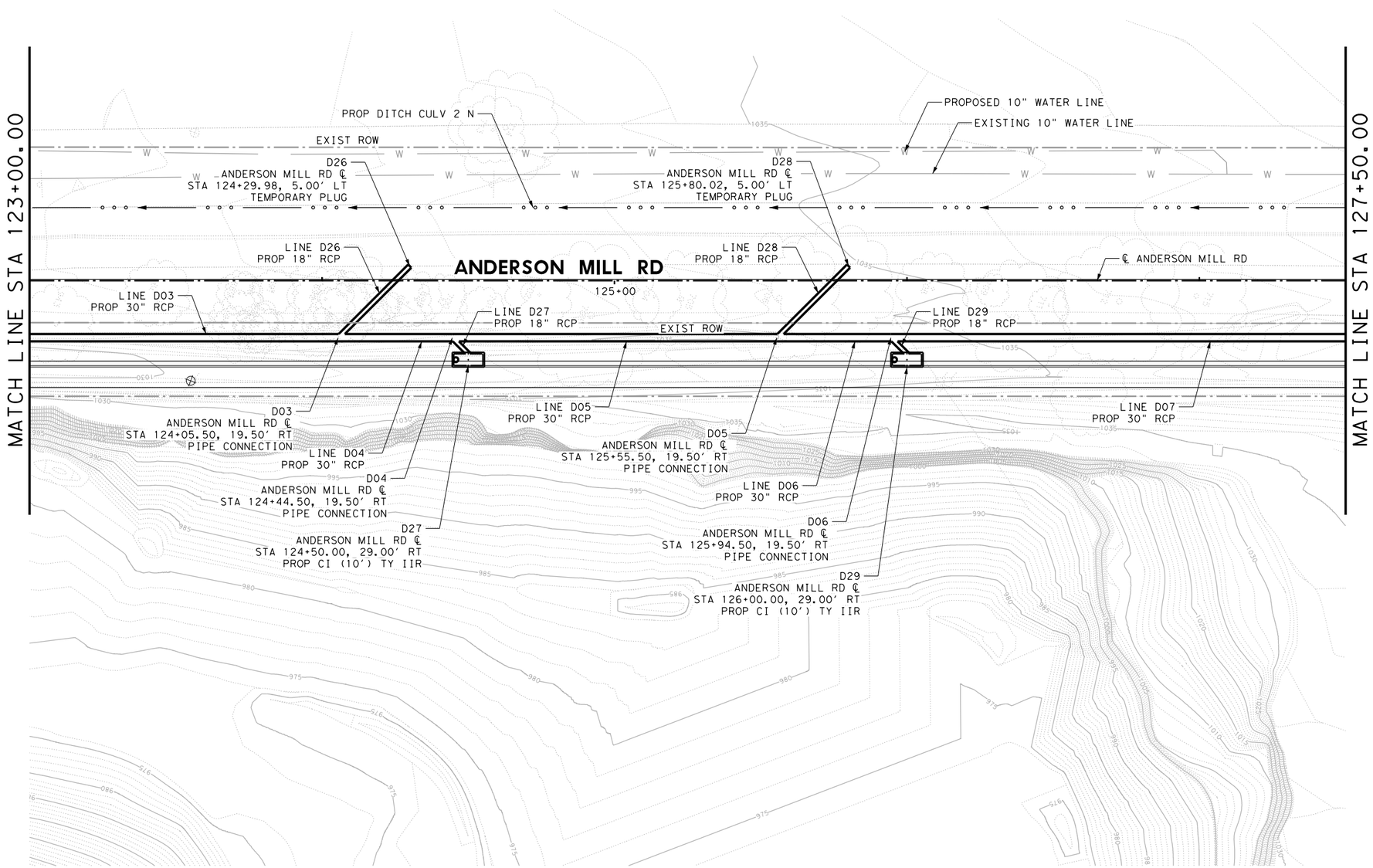

0' 10' 20' 40'
SCALE IN FEET

LEGEND

- EXISTING UTILITY
- EXISTING PLANIMETRICS
- DITCH FLOWLINE
- PROPOSED STORM SEWER
- EXISTING STORM SEWER

NOTES:
1. CURB INLETS MEASURED FROM TOP FACE OF CURB.
2. GRATE INLETS MEASURED FROM TOP CENTER OF GRATE.
3. THE MATERIAL AND CONSTRUCTION PRACTICES SHALL BE IN ACCORDANCE WITH THE STANDARD SPECIFICATIONS OF THE CITY OF CEDAR PARK, CITY OF AUSTIN, AND TXDOT (WHERE APPLICABLE) AS PRESENTED IN THE LATEST EDITION, AND/OR AS OTHERWISE CONTAINED ON THE PLANS.

STATE OF TEXAS
RILEY W. SLADEK
108887
LICENSED
PROFESSIONAL ENGINEER
10/4/2016

LJA Engineering, Inc.
FRN - F-1386

Binkley & Barfield, Inc
consulting engineers
Texas Registration Number F-257

CEDAR PARK

ANDERSON MILL RD
DRAINAGE PLAN SHEETS
STA 123+00 - STA 127+50

DESIGN BY:	RS	SCALE:	1"=40'
DRAWN BY:	CM		
CHECKED BY:	DG	SHEET:	6 OF 18
APPROVED BY:	DG		
PROJECT NO:		PAGE:	120
DATE:	10/4/2016		

10/4/2016
3:11:03 PM
I:\1841\1402\CADD\SHEETS\NORTH\06-Drainage Details\NAMR*DRN*06.dgn

PIPE NAME	25 YEAR DISCHARGE (CFS)	HEADWATER ELEVATION (FT)	OUTLET VELOCITY (FT/S)
DRIVEWAY CULVERT 1	15.00	1040.78	7.89

0′ 10′ 20′ 40′
SCALE IN FEET

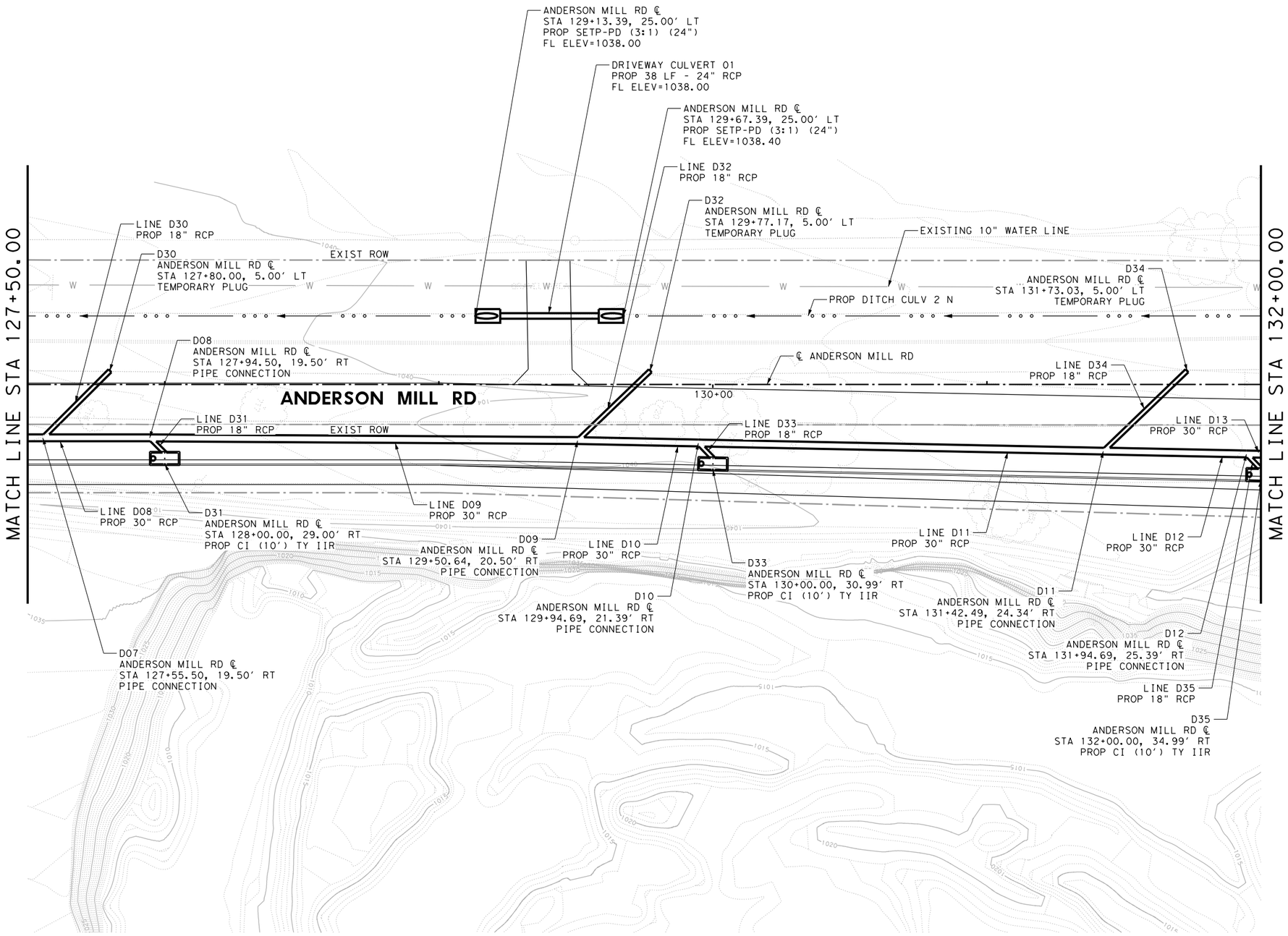

LEGEND

- EXISTING UTILITY
- EXISTING PLANIMETRICS
- DITCH FLOWLINE
- PROPOSED STORM SEWER
- EXISTING STORM SEWER

NOTES:
1. CURB INLETS MEASURED FROM TOP FACE OF CURB.
2. GRATE INLETS MEASURED FROM TOP CENTER OF GRATE.
3. THE MATERIAL AND CONSTRUCTION PRACTICES SHALL BE IN ACCORDANCE WITH THE STANDARD SPECIFICATIONS OF THE CITY OF CEDAR PARK, CITY OF AUSTIN, AND TXDOT (WHERE APPLICABLE) AS PRESENTED IN THE LATEST EDITION, AND/OR AS OTHERWISE CONTAINED ON THE PLANS.

STATE OF TEXAS
RILEY W. SLADEK
108887
LICENSED PROFESSIONAL ENGINEER
10/4/2016

LJA Engineering, Inc.
FRN - F-1386

Binkley & Barfield, Inc
consulting engineers
Texas Registration Number F-257

CEDAR PARK

ANDERSON MILL RD
DRAINAGE PLAN SHEETS
STA 127+50 - STA 132+00

DESIGN BY:	RS	SCALE:	1"=40′
DRAWN BY:	CM		
CHECKED BY:	DG	SHEET: 7 OF 18	
APPROVED BY:	DG		
PROJECT NO:		PAGE: 121	
DATE:	10/4/2016		

10/4/2016
3:11:05 PM
I:\1841\1402\CADD\SHEETS\NORTH\06-Drainage Details\NAMR*DRN*07.dgn

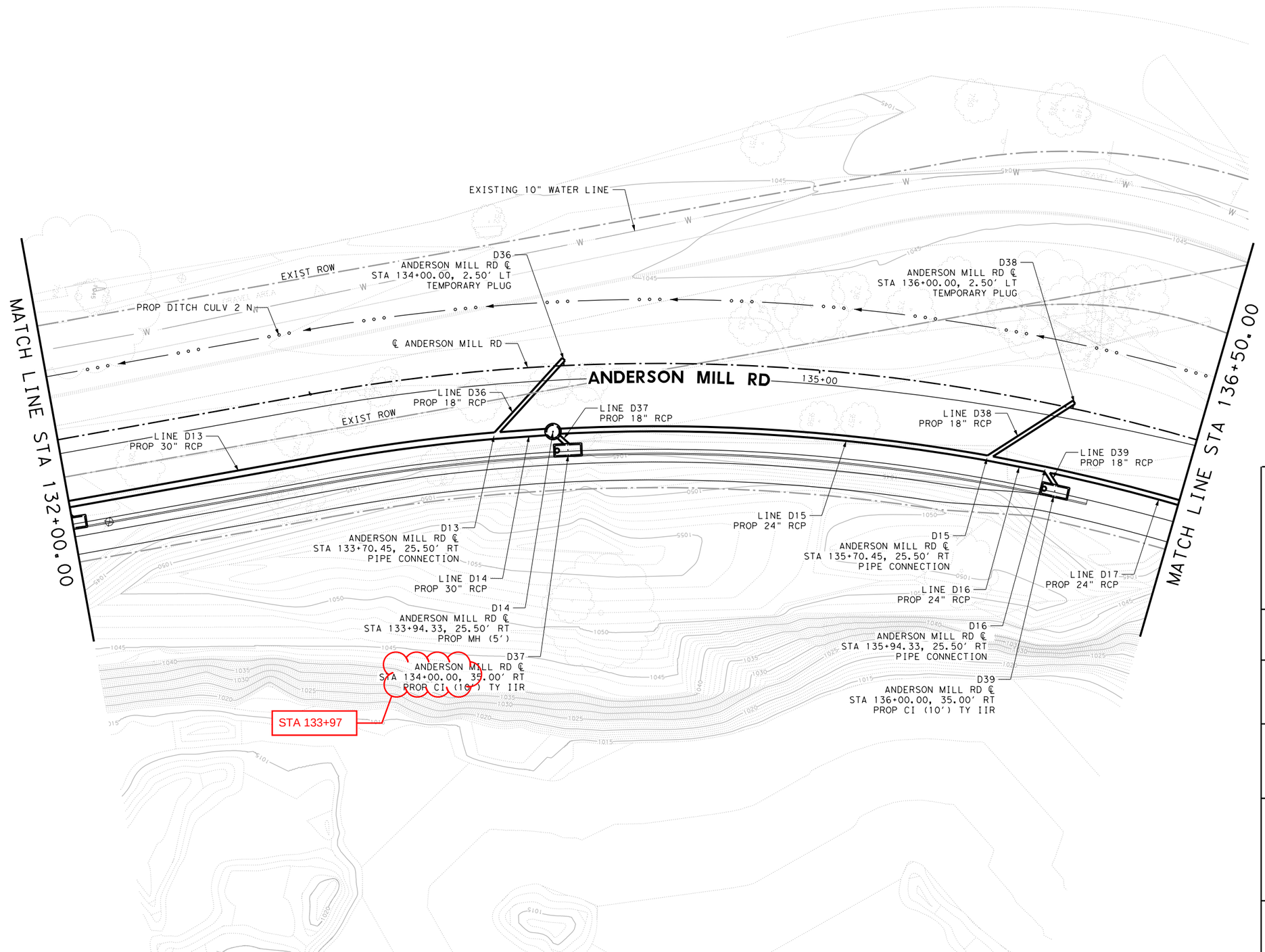

0' 10' 20' 40'
SCALE IN FEET

LEGEND

- EXISTING UTILITY
- EXISTING PLANIMETRICS
- DITCH FLOWLINE
- PROPOSED STORM SEWER
- EXISTING STORM SEWER

NOTES:
1. CURB INLETS MEASURED FROM TOP FACE OF CURB.
2. GRATE INLETS MEASURED FROM TOP CENTER OF GRATE.
3. THE MATERIAL AND CONSTRUCTION PRACTICES SHALL BE IN ACCORDANCE WITH THE STANDARD SPECIFICATIONS OF THE CITY OF CEDAR PARK, CITY OF AUSTIN, AND TXDOT (WHERE APPLICABLE) AS PRESENTED IN THE LATEST EDITION, AND/OR AS OTHERWISE CONTAINED ON THE PLANS.

STATE OF TEXAS
RILEY W. SLADEK
108887
LICENSED
PROFESSIONAL ENGINEER
10/4/2016

LJA Engineering, Inc.
FRN - F-1386

Binkley & Barfield, Inc
consulting engineers
Texas Registration Number F-257

CEDAR PARK

ANDERSON MILL RD
DRAINAGE PLAN SHEETS
STA 132+00 - STA 136+50

DESIGN BY:	RS	SCALE:	1"=40'
DRAWN BY:	CM		
CHECKED BY:	DG	SHEET:	8 OF 18
APPROVED BY:	DG		
PROJECT NO:		PAGE:	122
DATE:	10/4/2016		

10/4/2016
3:11:06 PM
I:\1841\1402\CADD\SHEETS\NORTH\06-Drainage Details\NAMR*DRN*08.dgn

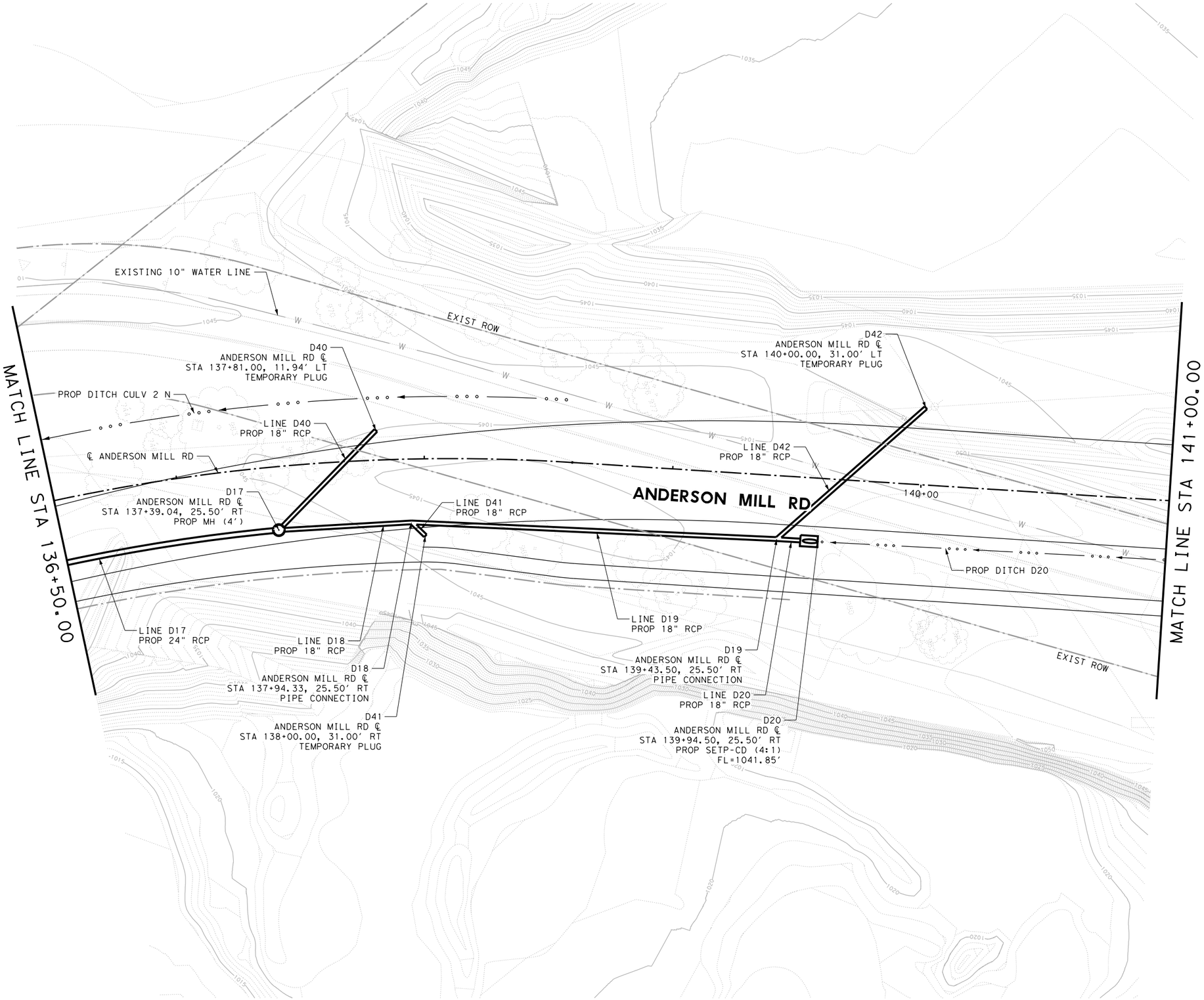

0' 10' 20' 40'
SCALE IN FEET

LEGEND

- EXISTING UTILITY
- EXISTING PLANIMETRICS
- DITCH FLOWLINE
- PROPOSED STORM SEWER
- EXISTING STORM SEWER

NOTES:
1. CURB INLETS MEASURED FROM TOP FACE OF CURB.
2. GRATE INLETS MEASURED FROM TOP CENTER OF GRATE.
3. THE MATERIAL AND CONSTRUCTION PRACTICES SHALL BE IN ACCORDANCE WITH THE STANDARD SPECIFICATIONS OF THE CITY OF CEDAR PARK, CITY OF AUSTIN, AND TXDOT (WHERE APPLICABLE) AS PRESENTED IN THE LATEST EDITION, AND/OR AS OTHERWISE CONTAINED ON THE PLANS.

STATE OF TEXAS
RILEY W. SLADEK
108887
LICENSED PROFESSIONAL ENGINEER
10/4/2016

LJA Engineering, Inc.
FRN - F-1386

Binkley & Barfield, Inc
consulting engineers
Texas Registration Number F-257

CEDAR PARK

ANDERSON MILL RD
DRAINAGE PLAN SHEETS
STA 136+50 - STA 141+00

DESIGN BY:	RS	SCALE:	1"=40'
DRAWN BY:	CM		
CHECKED BY:	DG	SHEET:	9 OF 18
APPROVED BY:	DG		
PROJECT NO:		PAGE:	123
DATE:	10/4/2016		

10/4/2016
3:11:07 PM
I:\1841\1402\CADD\SHEETS\NORTH\06-Drainage Details\NAMR*DRN*09.dgn

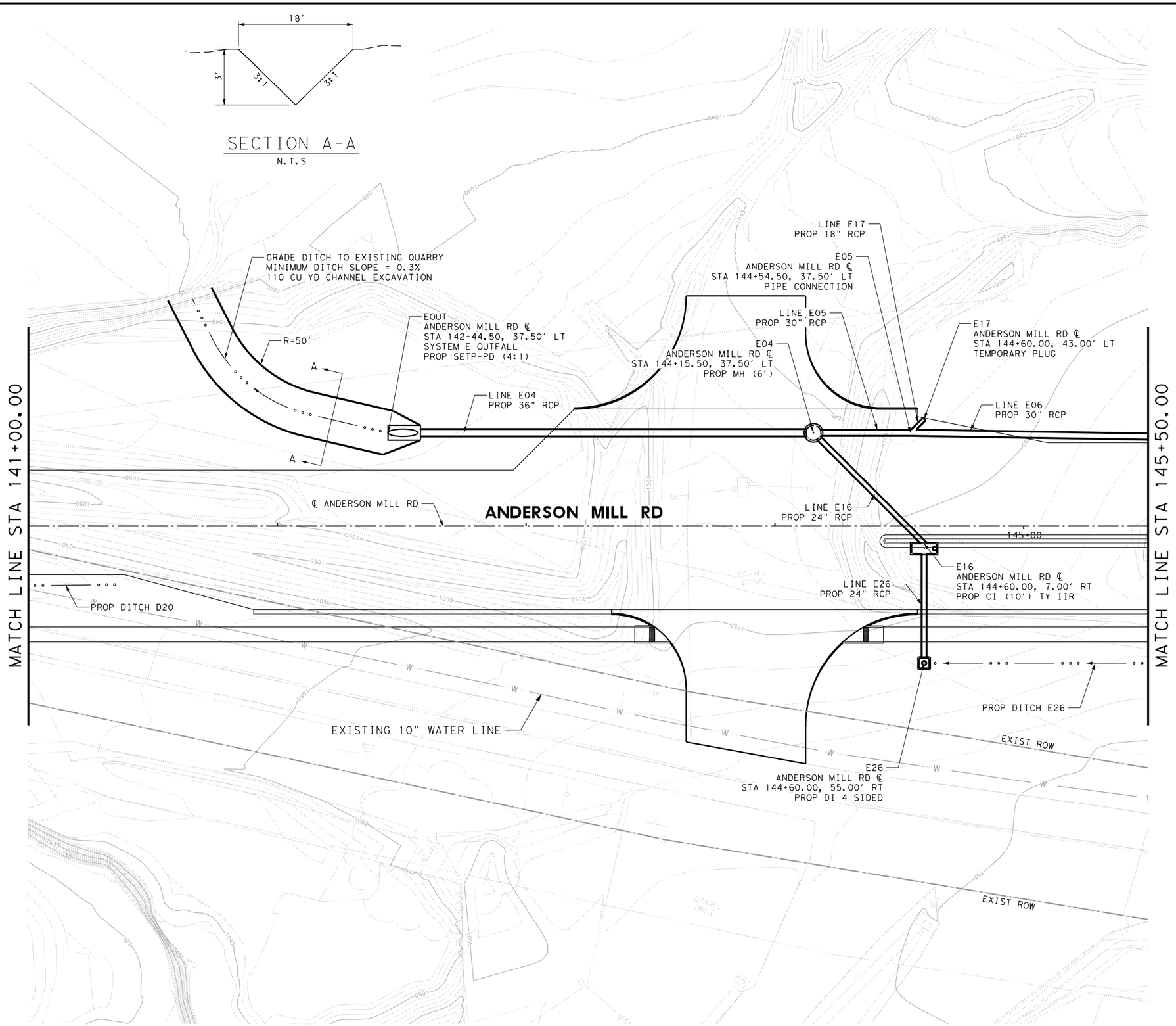

0' 10' 20' 40'
SCALE IN FEET

LEGEND

- EXISTING UTILITY
- EXISTING PLANIMETRICS
- DITCH FLOWLINE
- PROPOSED STORM SEWER
- EXISTING STORM SEWER

NOTES:
1. CURB INLETS MEASURED FROM TOP FACE OF CURB.
2. GRATE INLETS MEASURED FROM TOP CENTER OF GRATE.
3. THE MATERIAL AND CONSTRUCTION PRACTICES SHALL BE IN ACCORDANCE WITH THE STANDARD SPECIFICATIONS OF THE CITY OF CEDAR PARK, CITY OF AUSTIN, AND TXDOT (WHERE APPLICABLE) AS PRESENTED IN THE LATEST EDITION, AND/OR AS OTHERWISE CONTAINED ON THE PLANS.

STATE OF TEXAS
RILEY W. SLADEK
108887
LICENSED
PROFESSIONAL ENGINEER
10/4/2016

LJA Engineering, Inc.
FRN - F-1386

Binkley & Barfield, Inc
consulting engineers
Texas Registration Number F-257

CEDAR PARK

ANDERSON MILL RD
DRAINAGE PLAN SHEETS
STA 141+00 - STA 145+50

DESIGN BY:	RS	SCALE:	1"=40'
DRAWN BY:	CM		
CHECKED BY:	DG	SHEET: 10 OF 18	
APPROVED BY:	DG		
PROJECT NO:		PAGE: 124	
DATE:	10/4/2016		

10/4/2016
3:11:09 PM
I:\1841\1402\CADD\SHEETS\NORTH\06-Drainage Details\NAMR*DRN*10.dgn

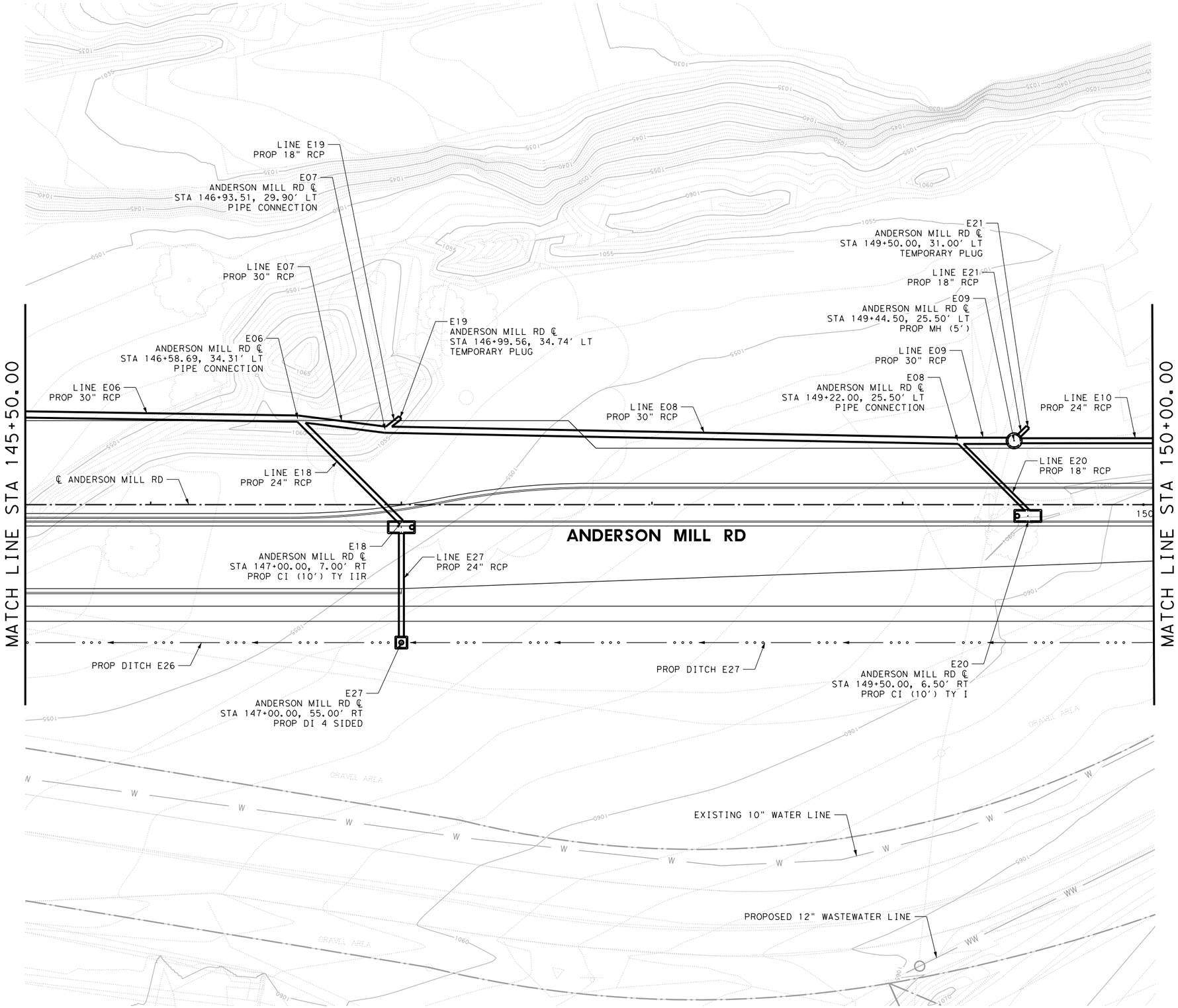

0' 10' 20' 40'
SCALE IN FEET

LEGEND

- EXISTING UTILITY
- EXISTING PLANIMETRICS
- DITCH FLOWLINE
- PROPOSED STORM SEWER
- EXISTING STORM SEWER

NOTES:
1. CURB INLETS MEASURED FROM TOP FACE OF CURB.
2. GRATE INLETS MEASURED FROM TOP CENTER OF GRATE.
3. THE MATERIAL AND CONSTRUCTION PRACTICES SHALL BE IN ACCORDANCE WITH THE STANDARD SPECIFICATIONS OF THE CITY OF CEDAR PARK, CITY OF AUSTIN, AND TXDOT (WHERE APPLICABLE) AS PRESENTED IN THE LATEST EDITION, AND/OR AS OTHERWISE CONTAINED ON THE PLANS.

STATE OF TEXAS
RILEY W. SLADEK
108887
LICENSED
PROFESSIONAL ENGINEER
10/4/2016

LJA Engineering, Inc.
FRN - F-1386

Binkley & Barfield, Inc
consulting engineers
Texas Registration Number F-257

CEDAR PARK

ANDERSON MILL RD
DRAINAGE PLAN SHEETS
STA 145+50 - STA 150+00

DESIGN BY:	RS	SCALE:	1"=40'
DRAWN BY:	CM		
CHECKED BY:	DG	SHEET:	11 OF 18
APPROVED BY:	DG		
PROJECT NO:		PAGE:	125
DATE:	10/4/2016		

10/4/2016
3:11:10 PM
I:\1841\1402\CADD\SHEETS\NORTH\06-Drainage Details\NAMR*DRN*11.dgn

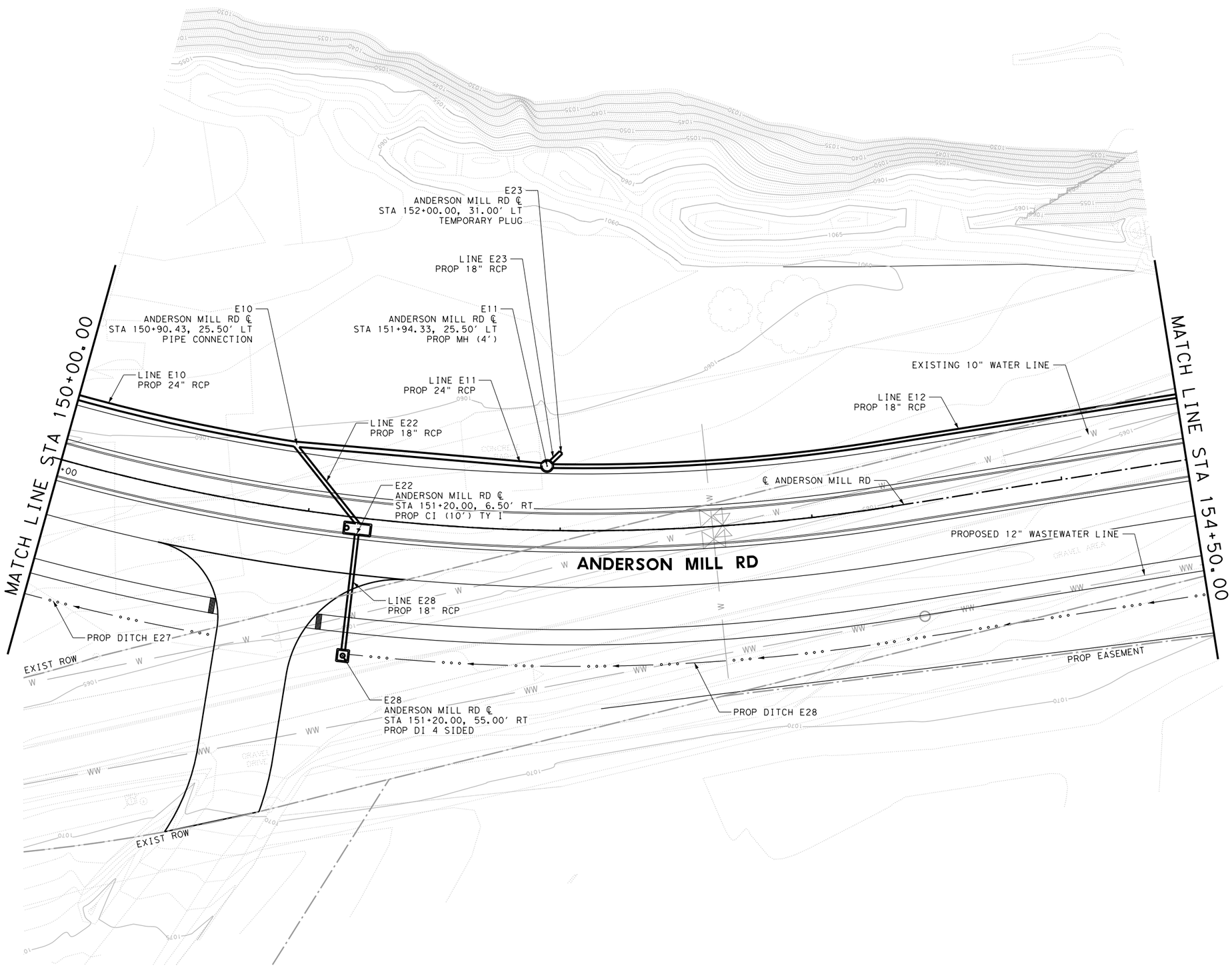

0' 10' 20' 40'
SCALE IN FEET

LEGEND

- EXISTING UTILITY
- EXISTING PLANIMETRICS
- DITCH FLOWLINE
- PROPOSED STORM SEWER
- EXISTING STORM SEWER

NOTES:
1. CURB INLETS MEASURED FROM TOP FACE OF CURB.
2. GRATE INLETS MEASURED FROM TOP CENTER OF GRATE.
3. THE MATERIAL AND CONSTRUCTION PRACTICES SHALL BE IN ACCORDANCE WITH THE STANDARD SPECIFICATIONS OF THE CITY OF CEDAR PARK, CITY OF AUSTIN, AND TXDOT (WHERE APPLICABLE) AS PRESENTED IN THE LATEST EDITION, AND/OR AS OTHERWISE CONTAINED ON THE PLANS.

STATE OF TEXAS
RILEY W. SLADEK
108887
LICENSED
PROFESSIONAL ENGINEER
10/4/2016

LJA Engineering, Inc.
FRN - F-1386

Binkley & Barfield, Inc
consulting engineers
Texas Registration Number F-257

CEDAR PARK

ANDERSON MILL RD
DRAINAGE PLAN SHEETS
STA 150+00 - STA 154+50

DESIGN BY:	RS	SCALE:	1"=40'
DRAWN BY:	CM		
CHECKED BY:	DG	SHEET:	12 OF 18
APPROVED BY:	DG		
PROJECT NO:			
DATE:	10/4/2016	PAGE:	126

10/4/2016
3:11:11 PM
I:\1841\1402\CADD\SHEETS\NORTH\06-Drainage Details\NAMR*DRN*12.dgn

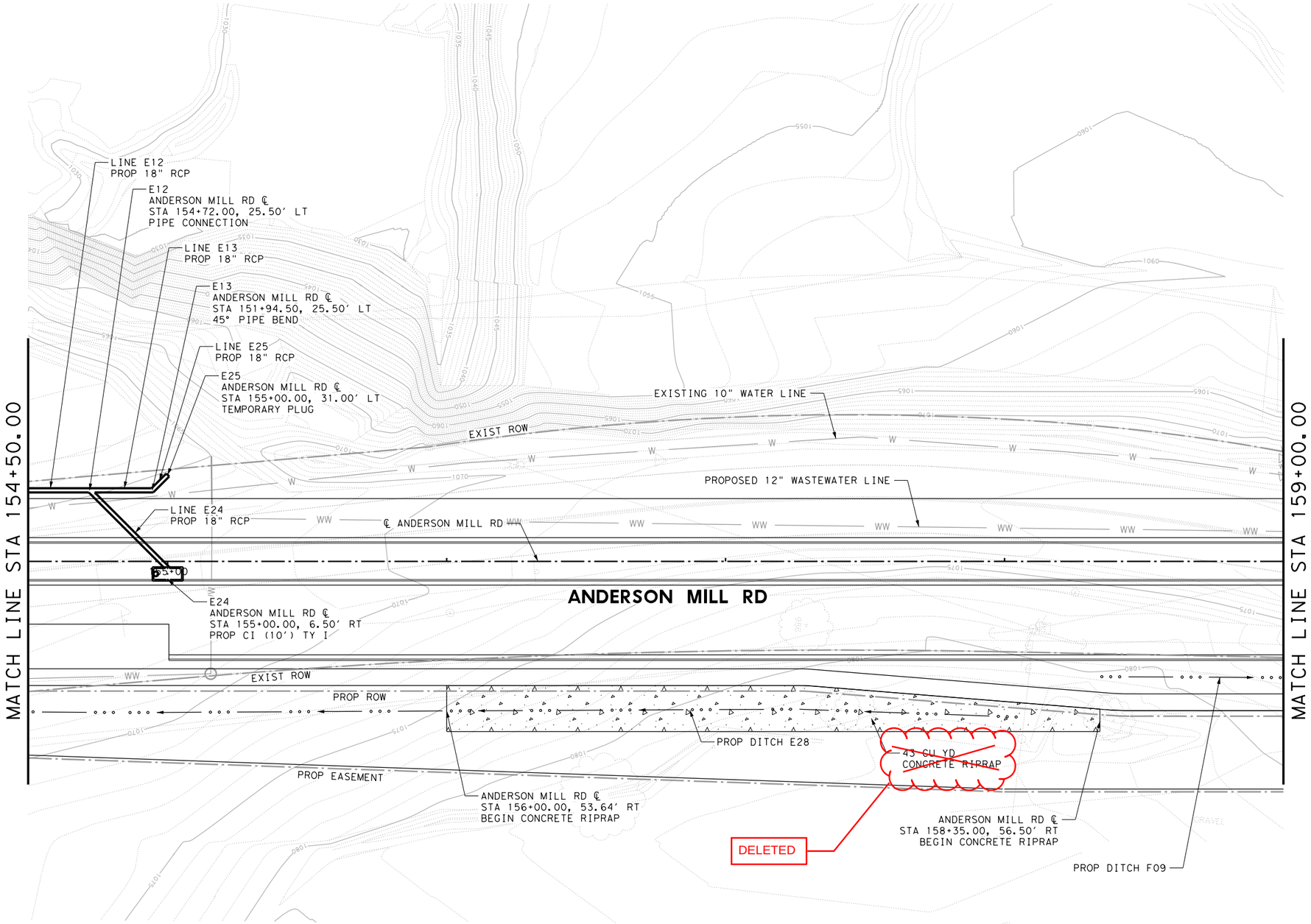

0' 10' 20' 40'
SCALE IN FEET

LEGEND

- EXISTING UTILITY
- EXISTING PLANIMETRICS
- DITCH FLOWLINE
- PROPOSED STORM SEWER
- EXISTING STORM SEWER

NOTES:
1. CURB INLETS MEASURED FROM TOP FACE OF CURB.
2. GRATE INLETS MEASURED FROM TOP CENTER OF GRATE.
3. THE MATERIAL AND CONSTRUCTION PRACTICES SHALL BE IN ACCORDANCE WITH THE STANDARD SPECIFICATIONS OF THE CITY OF CEDAR PARK, CITY OF AUSTIN, AND TXDOT (WHERE APPLICABLE) AS PRESENTED IN THE LATEST EDITION, AND/OR AS OTHERWISE CONTAINED ON THE PLANS.

STATE OF TEXAS
RILEY W. SLADEK
108887
LICENSED
PROFESSIONAL ENGINEER
10/4/2016

LJA Engineering, Inc.
FRN - F-1386

Binkley & Barfield, Inc
consulting engineers
Texas Registration Number F-257

CEDAR PARK

ANDERSON MILL RD
DRAINAGE PLAN SHEETS
STA 154+50 - STA 159+00

DESIGN BY:	RS	SCALE:	1"=40'
DRAWN BY:	CM		
CHECKED BY:	DG	SHEET: 13 OF 18	
APPROVED BY:	DG		
PROJECT NO:		PAGE: 127	
DATE:	10/4/2016		

10/4/2016
3:11:12 PM
I:\1841\1402\CADD\SHEETS\NORTH\06-Drainage Details\NAMR*DRN*13.dgn

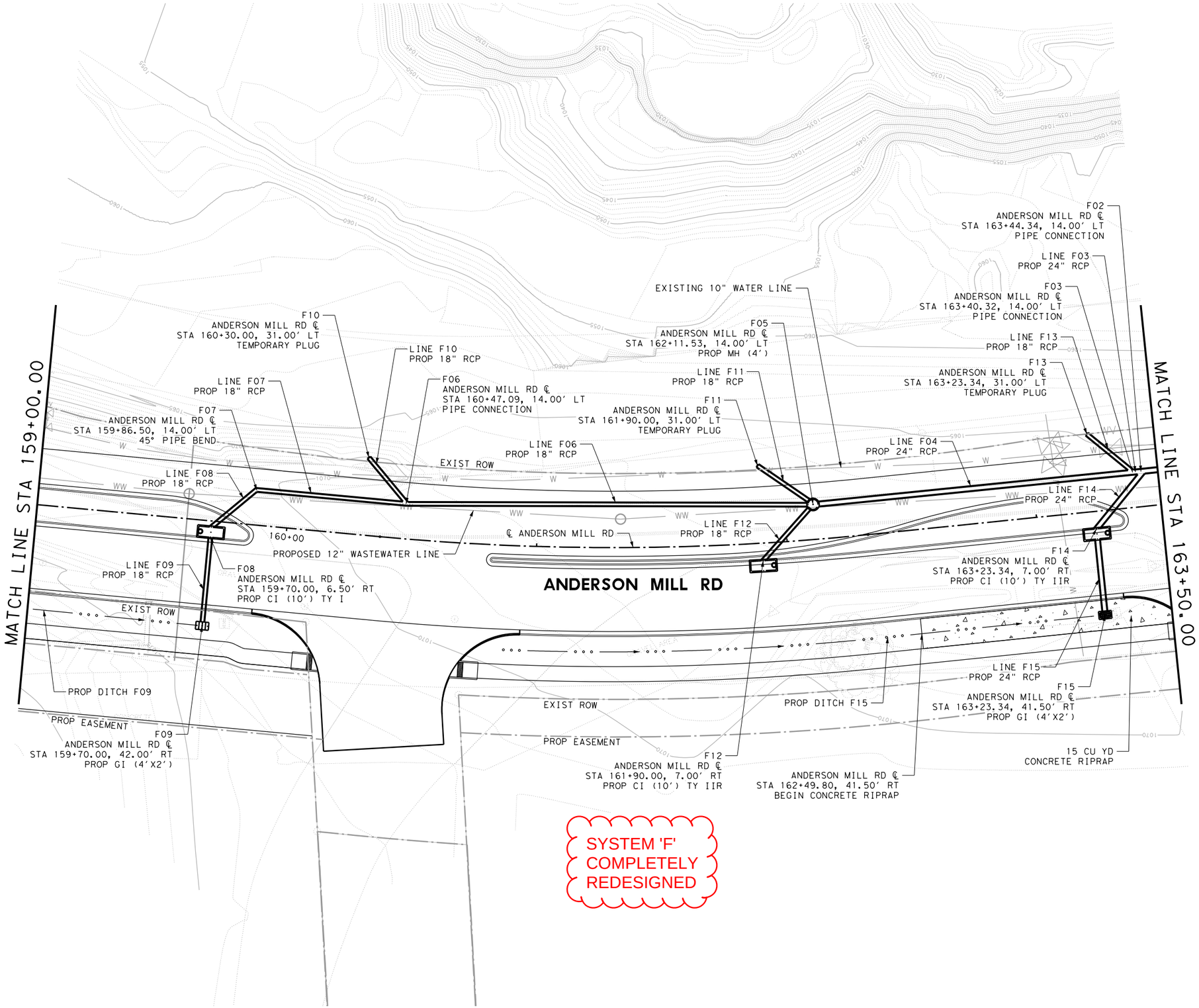

0' 10' 20' 40'
SCALE IN FEET

LEGEND

- EXISTING UTILITY
- EXISTING PLANIMETRICS
- DITCH FLOWLINE
- PROPOSED STORM SEWER
- EXISTING STORM SEWER

NOTES:
1. CURB INLETS MEASURED FROM TOP FACE OF CURB.
2. GRATE INLETS MEASURED FROM TOP CENTER OF GRATE.
3. THE MATERIAL AND CONSTRUCTION PRACTICES SHALL BE IN ACCORDANCE WITH THE STANDARD SPECIFICATIONS OF THE CITY OF CEDAR PARK, CITY OF AUSTIN, AND TXDOT (WHERE APPLICABLE) AS PRESENTED IN THE LATEST EDITION, AND/OR AS OTHERWISE CONTAINED ON THE PLANS.

STATE OF TEXAS
RILEY W. SLADEK
108887
LICENSED
PROFESSIONAL ENGINEER
10/4/2016

LJA Engineering, Inc.
FRN - F-1386

Binkley & Barfield, Inc
consulting engineers
Texas Registration Number F-257

CEDAR PARK

ANDERSON MILL RD
DRAINAGE PLAN SHEETS
STA 159+00 - STA 163+50

DESIGN BY:	RS	SCALE:	1"=40'
DRAWN BY:	CM		
CHECKED BY:	DG	SHEET:	14 OF 18
APPROVED BY:	DG		
PROJECT NO:			
DATE:	10/4/2016	PAGE:	128

10/4/2016
3:11:13 PM
I:\1841\1402\CADD\SHEETS\NORTH\06-Drainage Details\NAMR*DRN*14.dgn

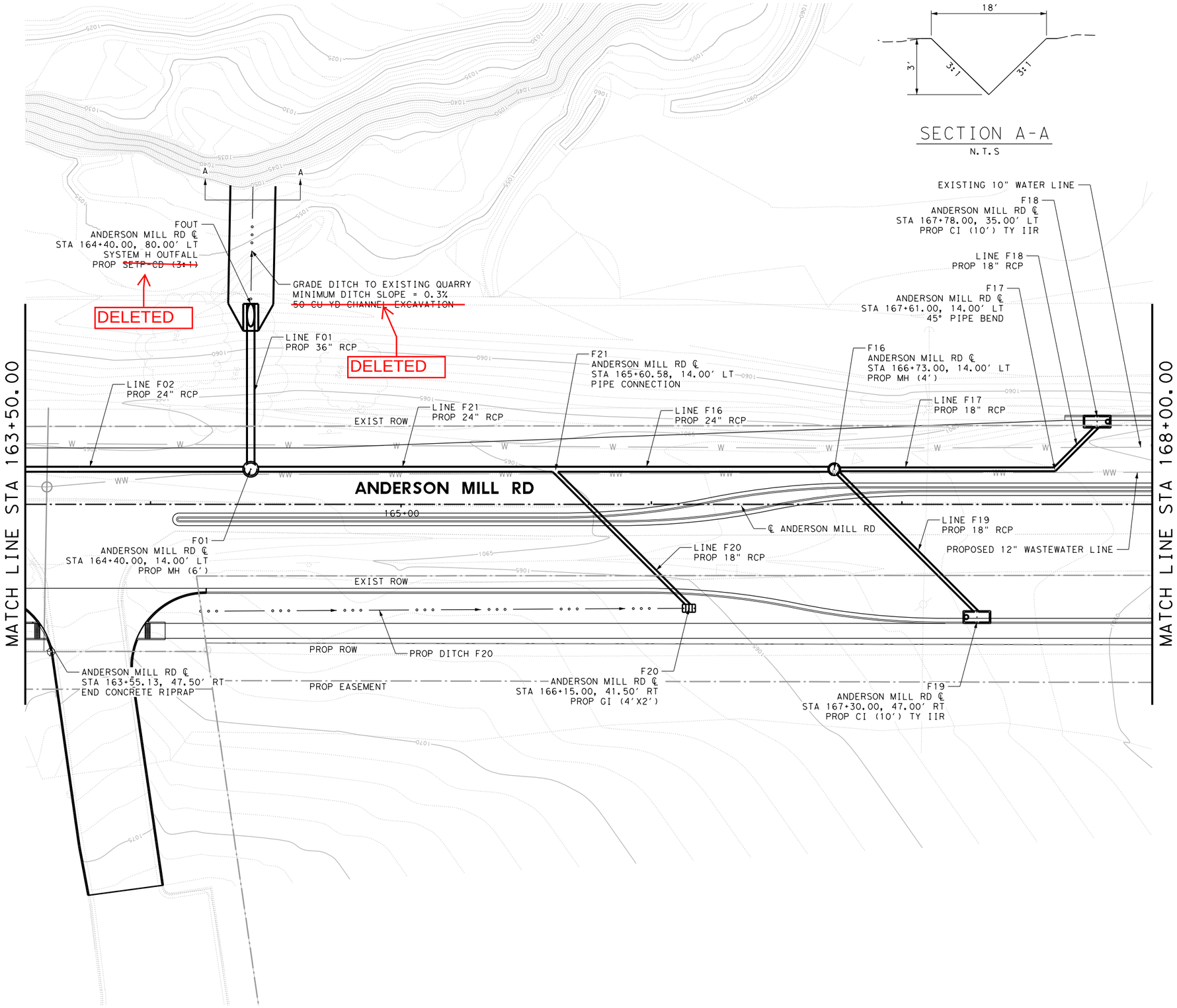

SECTION A-A

N.T.S

0' 10' 20' 40'

SCALE IN FEET

LEGEND

- EXISTING UTILITY
- EXISTING PLANIMETRICS
- DITCH FLOWLINE
- PROPOSED STORM SEWER
- EXISTING STORM SEWER

NOTES:

1. CURB INLETS MEASURED FROM TOP FACE OF CURB.
2. GRATE INLETS MEASURED FROM TOP CENTER OF GRATE.
3. THE MATERIAL AND CONSTRUCTION PRACTICES SHALL BE IN ACCORDANCE WITH THE STANDARD SPECIFICATIONS OF THE CITY OF CEDAR PARK, CITY OF AUSTIN, AND TXDOT (WHERE APPLICABLE) AS PRESENTED IN THE LATEST EDITION, AND/OR AS OTHERWISE CONTAINED ON THE PLANS.

STATE OF TEXAS
RILEY W. SLADEK
108887
LICENSED PROFESSIONAL ENGINEER
10/4/2016

LJA Engineering, Inc.
FRN - F-1386

Binkley & Barfield, Inc
consulting engineers
Texas Registration Number F-257

CEDAR PARK

ANDERSON MILL RD

DRAINAGE PLAN SHEETS

STA 163+50 - STA 168+00

DESIGN BY:	RS	SCALE:	1"=40'
DRAWN BY:	CM		
CHECKED BY:	DG	SHEET:	15 OF 18
APPROVED BY:	DG		
PROJECT NO:		PAGE:	129
DATE:	10/4/2016		

10/4/2016
3:11:15 PM
I:\1841\1402\CADD\SHEETS\NORTH\06-Drainage Details\NAMR*DRN*15.dgn

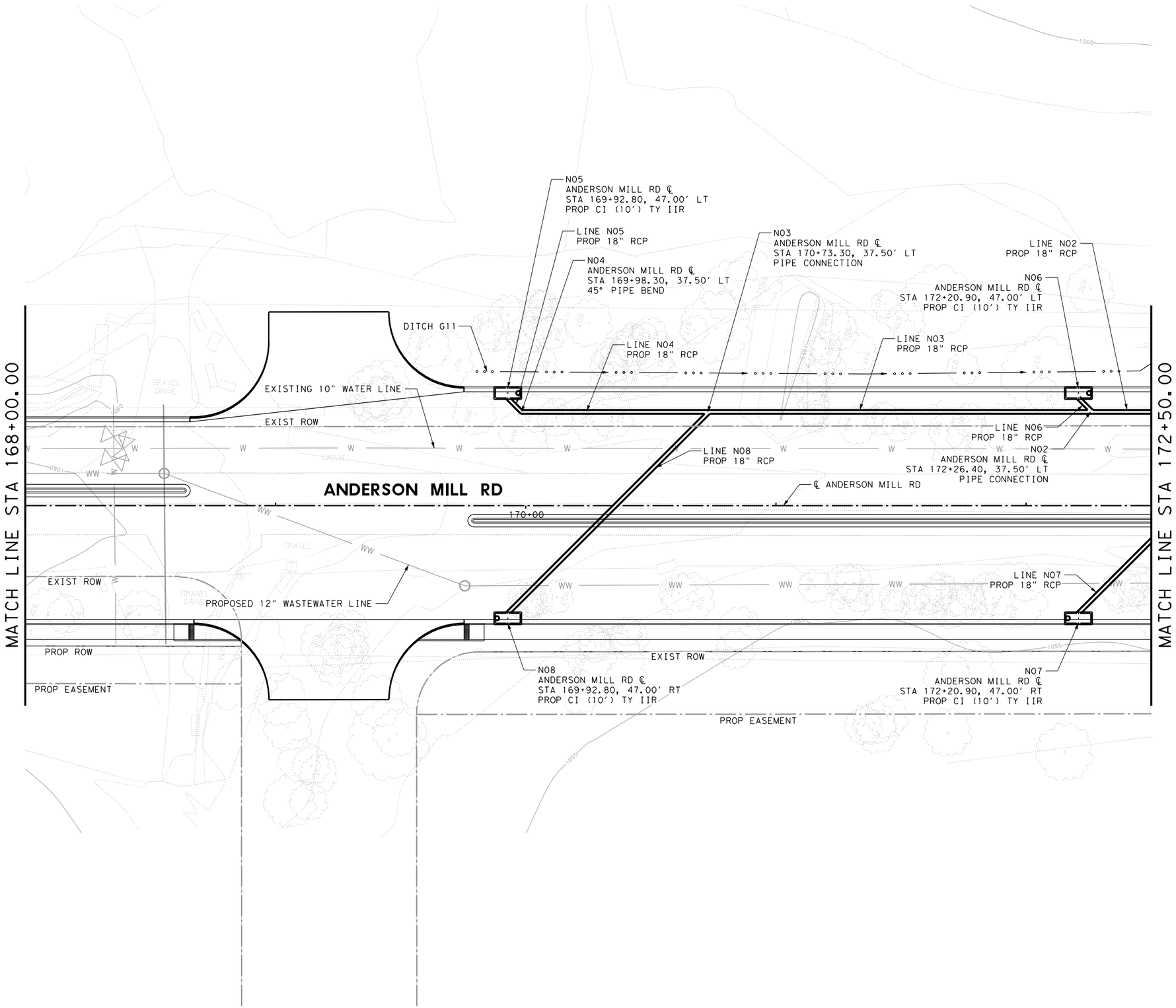

0' 10' 20' 40'
SCALE IN FEET

LEGEND

- EXISTING UTILITY
- EXISTING PLANIMETRICS
- DITCH FLOWLINE
- PROPOSED STORM SEWER
- EXISTING STORM SEWER

NOTES:
1. CURB INLETS MEASURED FROM TOP FACE OF CURB.
2. GRATE INLETS MEASURED FROM TOP CENTER OF GRATE.
3. THE MATERIAL AND CONSTRUCTION PRACTICES SHALL BE IN ACCORDANCE WITH THE STANDARD SPECIFICATIONS OF THE CITY OF CEDAR PARK, CITY OF AUSTIN, AND TXDOT (WHERE APPLICABLE) AS PRESENTED IN THE LATEST EDITION, AND/OR AS OTHERWISE CONTAINED ON THE PLANS.

STATE OF TEXAS
RILEY W. SLADEK
108887
LICENSED
PROFESSIONAL ENGINEER
10/4/2016

LJA Engineering, Inc.
FRN - F-1386

Binkley & Barfield, Inc
consulting engineers
Texas Registration Number F-257

CEDAR PARK

ANDERSON MILL RD
DRAINAGE PLAN SHEETS
STA 168+00 - STA 172+50

DESIGN BY:	RS	SCALE:	1"=40'
DRAWN BY:	CM		
CHECKED BY:	DG	SHEET: 16 OF 18	
APPROVED BY:	DG		
PROJECT NO:		PAGE: 130	
DATE:	10/4/2016		

10/4/2016
3:11:16 PM
I:\1841\1402\CADD\SHEETS\NORTH\06-Drainage Details\NAMR*DRN*16.dgn

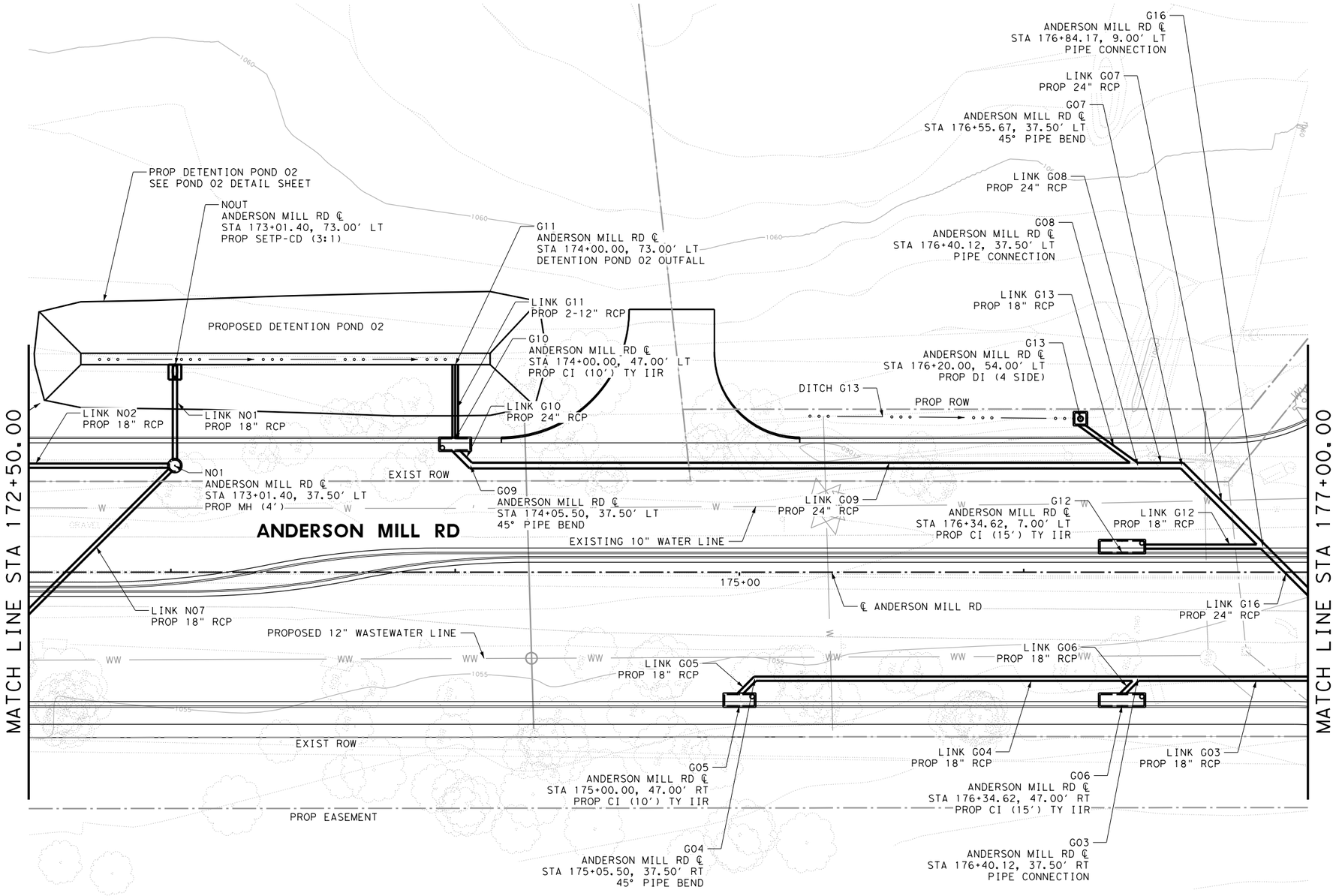

0' 10' 20' 40'
SCALE IN FEET

LEGEND

- EXISTING UTILITY
- EXISTING PLANIMETRICS
- DITCH FLOWLINE
- PROPOSED STORM SEWER
- EXISTING STORM SEWER

NOTES:
1. CURB INLETS MEASURED FROM TOP FACE OF CURB.
2. GRATE INLETS MEASURED FROM TOP CENTER OF GRATE.
3. THE MATERIAL AND CONSTRUCTION PRACTICES SHALL BE IN ACCORDANCE WITH THE STANDARD SPECIFICATIONS OF THE CITY OF CEDAR PARK, CITY OF AUSTIN, AND TXDOT (WHERE APPLICABLE) AS PRESENTED IN THE LATEST EDITION, AND/OR AS OTHERWISE CONTAINED ON THE PLANS.

STATE OF TEXAS
RILEY W. SLADEK
108887
LICENSED
PROFESSIONAL ENGINEER
10/4/2016

LJA Engineering, Inc.
FRN - F-1386

Binkley & Barfield, Inc
consulting engineers
Texas Registration Number F-257

CEDAR PARK

ANDERSON MILL RD
DRAINAGE PLAN SHEETS
STA 172+50 - STA 177+00

DESIGN BY:	RS	SCALE:	1"=40'
DRAWN BY:	CM		
CHECKED BY:	DG	SHEET: 17 OF 18	
APPROVED BY:	DG		
PROJECT NO:		PAGE: 131	
DATE:	10/4/2016		

10/4/2016
3:11:17 PM
I:\1841\1402\CADD\SHEETS\NORTH\06-Drainage Details\NAMR*DRN*17.dgn

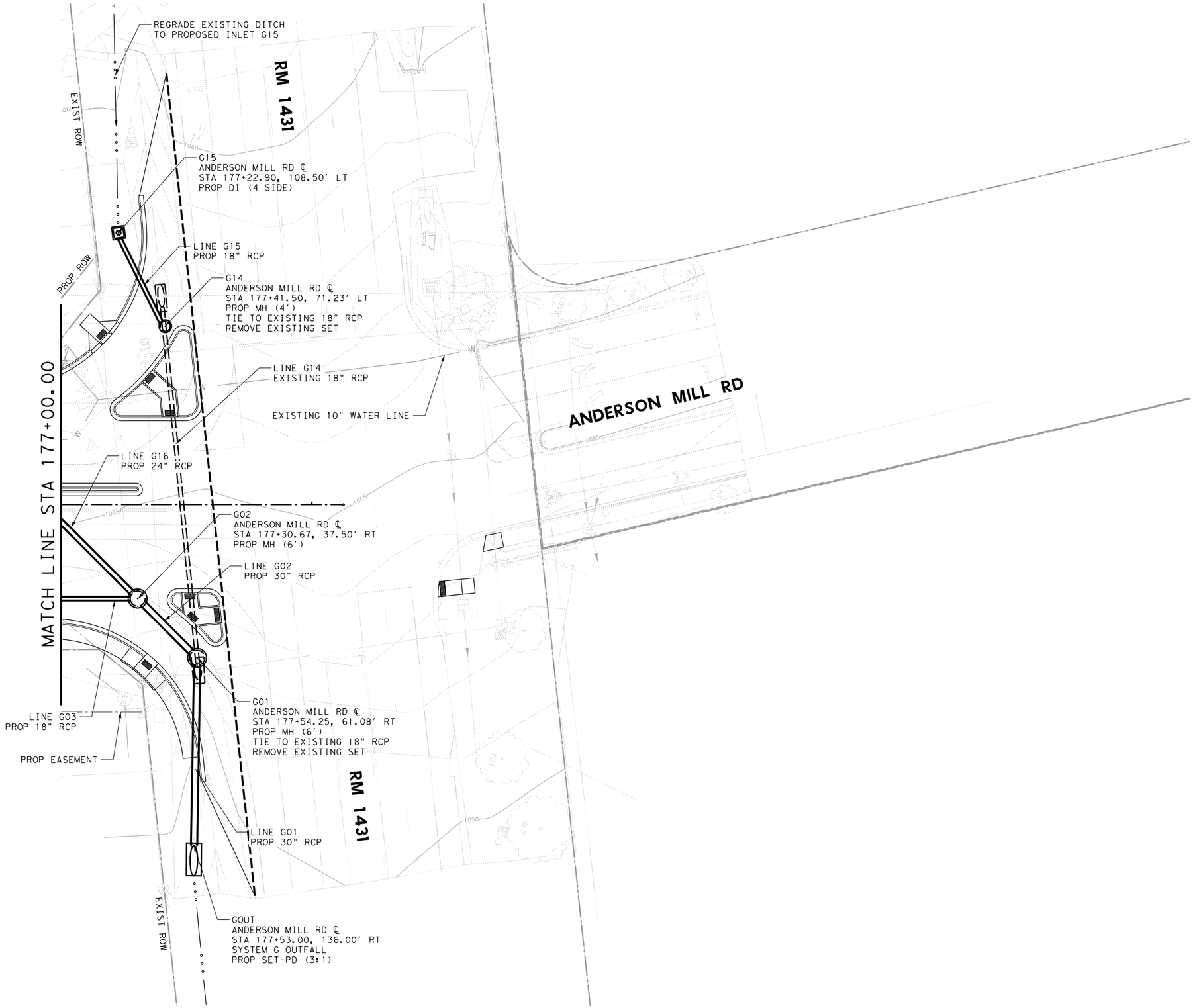

0' 10' 20' 40'
SCALE IN FEET

LEGEND

- EXISTING UTILITY
- EXISTING PLANIMETRICS
- DITCH FLOWLINE
- PROPOSED STORM SEWER
- EXISTING STORM SEWER

NOTES:
1. CURB INLETS MEASURED FROM TOP FACE OF CURB.
2. GRATE INLETS MEASURED FROM TOP CENTER OF GRATE.
3. THE MATERIAL AND CONSTRUCTION PRACTICES SHALL BE IN ACCORDANCE WITH THE STANDARD SPECIFICATIONS OF THE CITY OF CEDAR PARK, CITY OF AUSTIN, AND TXDOT (WHERE APPLICABLE) AS PRESENTED IN THE LATEST EDITION, AND/OR AS OTHERWISE CONTAINED ON THE PLANS.

STATE OF TEXAS
RILEY W. SLADEK
108887
LICENSED
PROFESSIONAL ENGINEER
10/4/2016

LJA Engineering, Inc.
FRN - F-1386

Binkley & Barfield, Inc
consulting engineers
Texas Registration Number F-257

CEDAR PARK

ANDERSON MILL RD
DRAINAGE PLAN SHEETS
STA 177+00 - END

DESIGN BY:	RS	SCALE:	1"=40'
DRAWN BY:	CM		
CHECKED BY:	DG	SHEET: 18 OF 18	
APPROVED BY:	DG		
PROJECT NO:		PAGE: 132	
DATE:	10/4/2016		

10/4/2016
3:11:18 PM
I:\1841\1402\CADD\SHEETS\NORTH\06-Drainage Details\NAMR*DRN*18.dgn

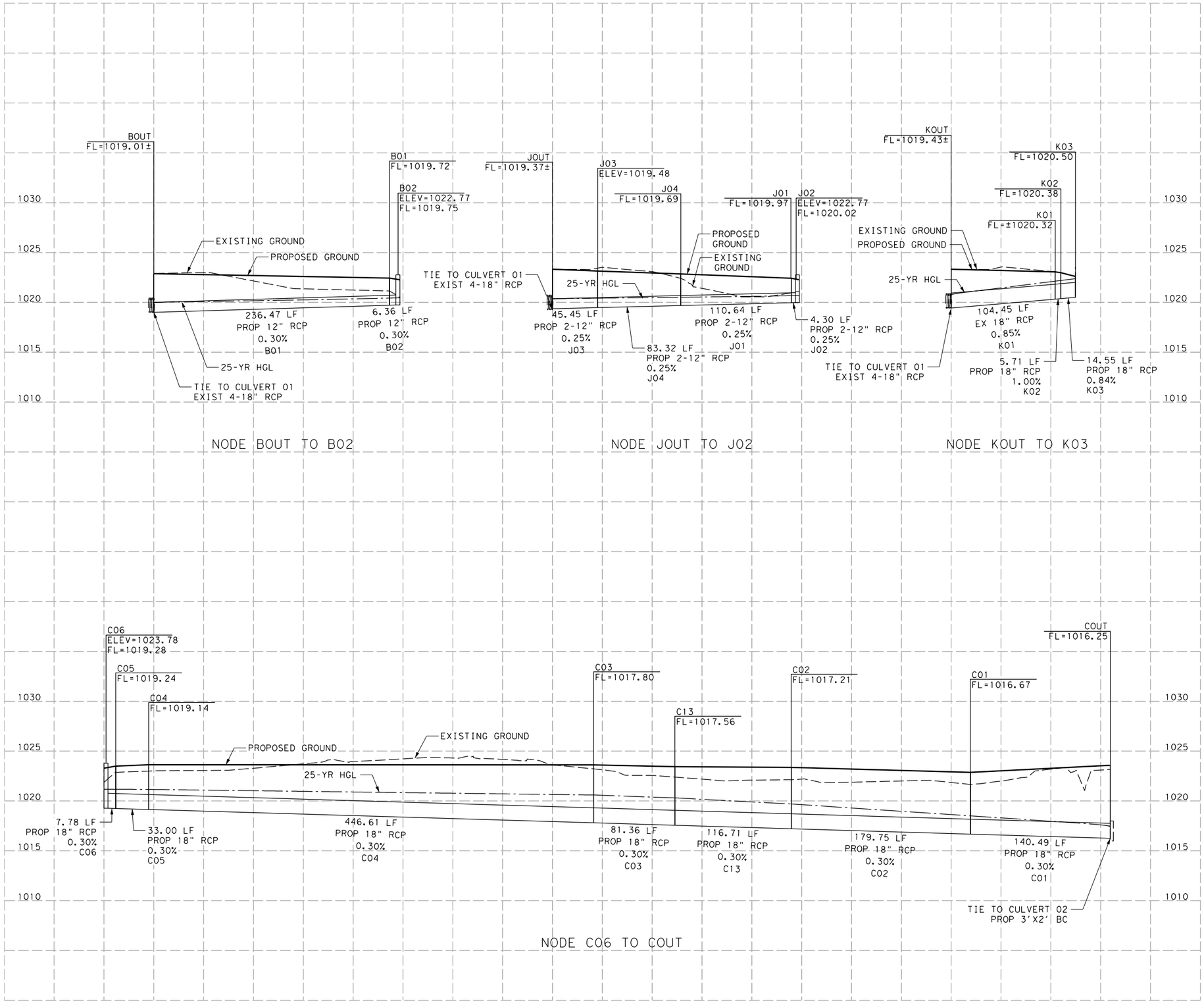

HORZ 0' 50' 100'
VERT 0' 5' 10'
SCALE IN FEET

NOTES:
1. EXISTING UTILITIES MAY NOT BE SHOWN. CONTRACTOR TO VERIFY PRIOR TO INSTALL.

STATE OF TEXAS
RILEY W. SLADEK
108887
LICENSED
PROFESSIONAL ENGINEER
10/4/2016

LJA Engineering, Inc.
FRN - F-1386

Binkley & Barfield, Inc
consulting engineers
Texas Registration Number F-257

CEDAR PARK

ANDERSON MILL RD
DRAINAGE PROFILE SHEETS
SYSTEM B, C, J, K

DESIGN BY:	RS	SCALE:	1"=100' 1"=10'
DRAWN BY:	CM		
CHECKED BY:	DG	SHEET:	1 OF 8
APPROVED BY:	DG		
PROJECT NO:		PAGE:	133
DATE:	10/4/2016		

10/4/2016
3:11:19 PM
I:\1841\1402\CADD\SHEETS\NORTH\06-Drainage Details\NAMR*DRNPROF*01.dgn

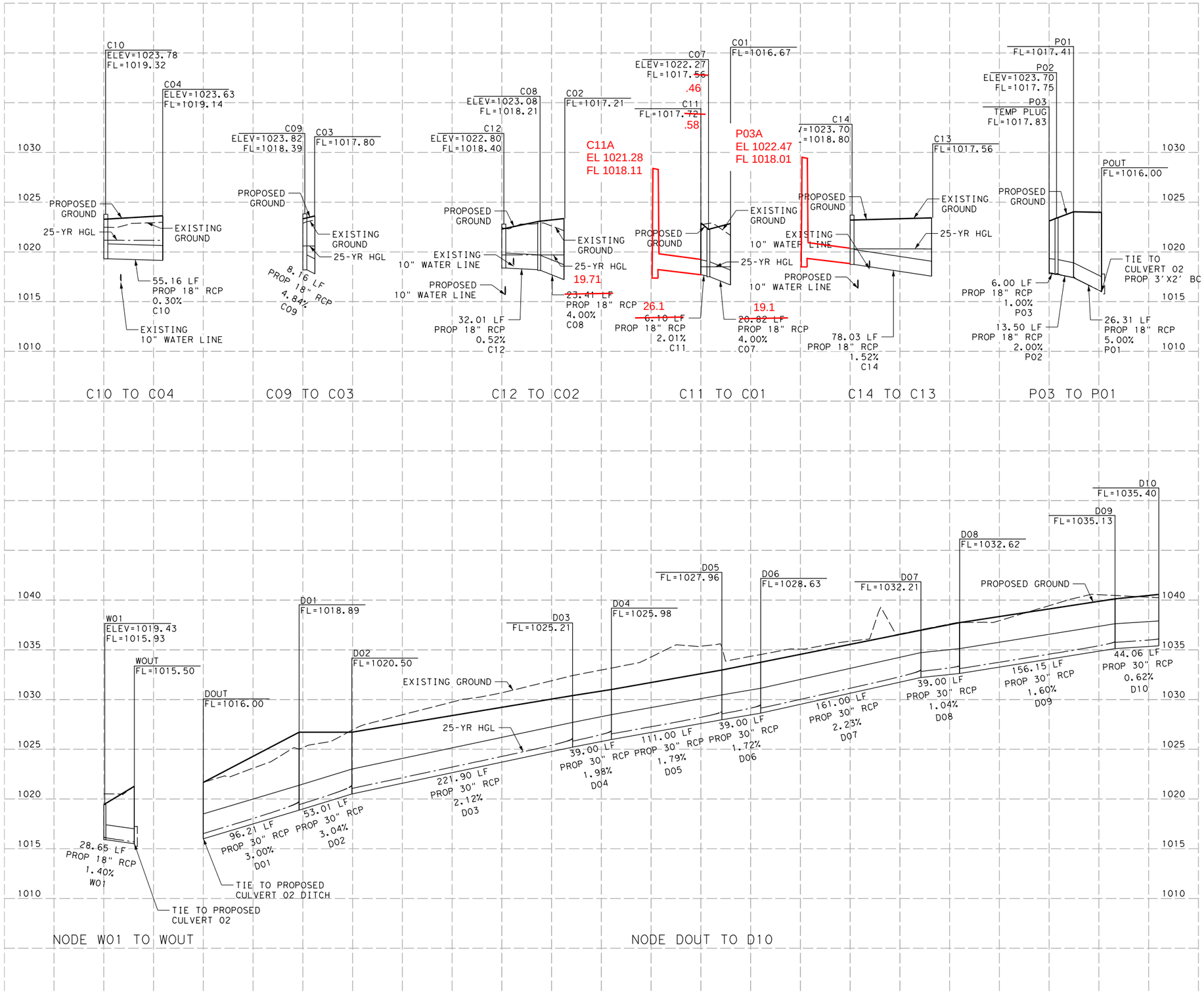

HORZ 0' 50' 100'
VERT 0' 5' 10'
SCALE IN FEET

NOTES:
1. EXISTING UTILITIES MAY NOT BE SHOWN. CONTRACTOR TO VERIFY PRIOR TO INSTALL.

STATE OF TEXAS
RILEY W. SLADEK
108887
LICENSED PROFESSIONAL ENGINEER
10/4/2016

LJA Engineering, Inc.
FRN - F-1386

Binkley & Barfield, Inc
consulting engineers
Texas Registration Number F-257

CEDAR PARK

ANDERSON MILL RD
DRAINAGE PROFILE SHEETS
SYSTEM C, D, H, P

DESIGN BY:	RS	SCALE:	1"=100' 1"=10'
DRAWN BY:	CM		
CHECKED BY:	DG	SHEET: 2 OF 8	
APPROVED BY:	DG		
PROJECT NO:			
DATE:	10/4/2016	PAGE: 134	

10/4/2016
3:11:19 PM
I:\1841\1402\CADD\SHEETS\NORTH\06-Drainage Details\NAMR*DRNPROF*02.dgn

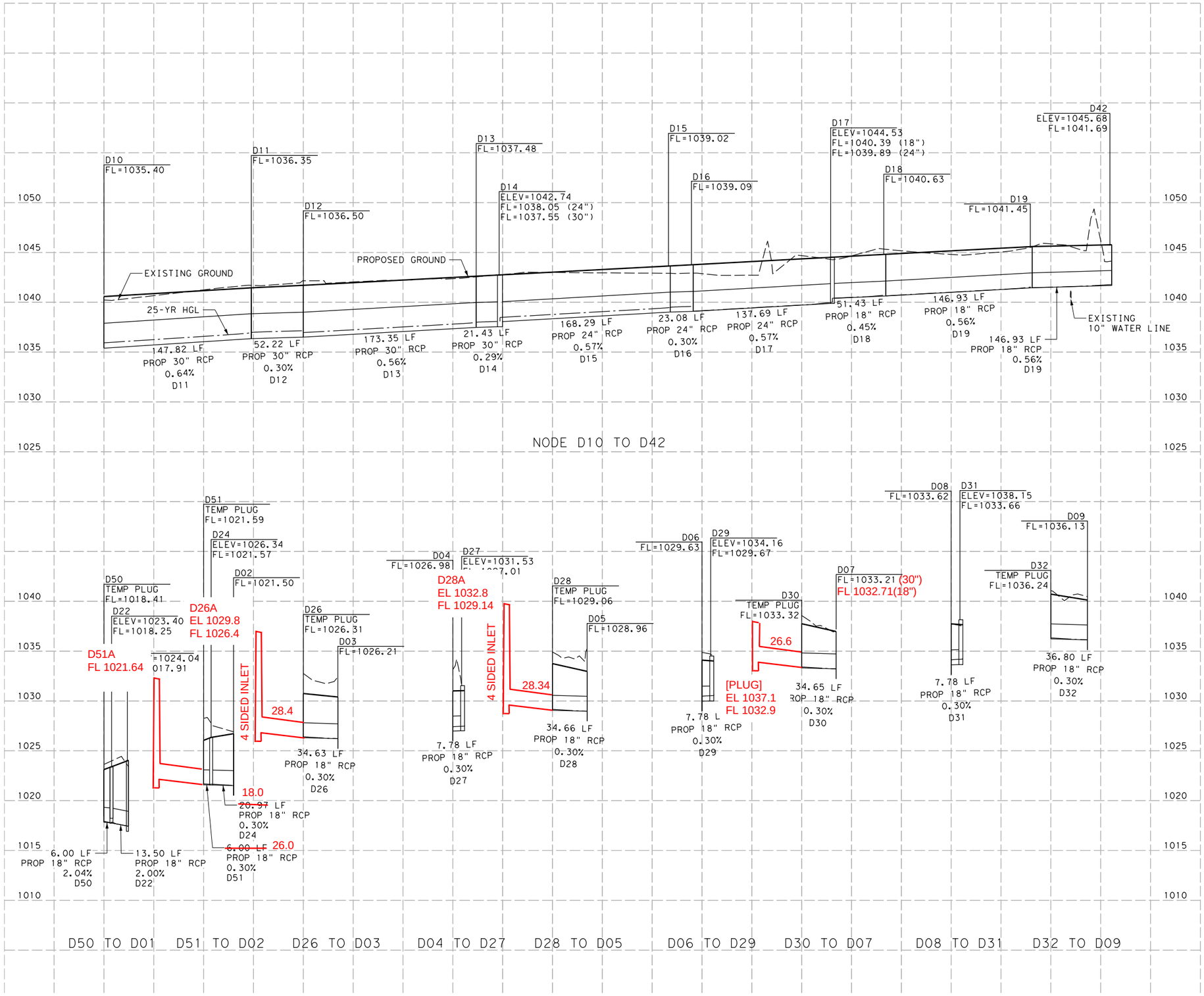

HORZ 0′ 50′ 100′
VERT 0′ 5′ 10′
SCALE IN FEET

NOTES:
1. EXISTING UTILITIES MAY NOT BE SHOWN. CONTRACTOR TO VERIFY PRIOR TO INSTALL.

STATE OF TEXAS
RILEY W. SLADEK
108887
LICENSED PROFESSIONAL ENGINEER
10/4/2016

LJA Engineering, Inc.
FRN - F-1386

Binkley & Barfield, Inc
consulting engineers
Texas Registration Number F-257

CEDAR PARK

ANDERSON MILL RD
DRAINAGE PROFILE SHEETS
SYSTEM D

DESIGN BY:	RS	SCALE:	1"=100′ 1"=10′
DRAWN BY:	CM		
CHECKED BY:	DG	SHEET:	3 OF 8
APPROVED BY:	DG		
PROJECT NO:			
DATE:	10/4/2016	PAGE:	135

10/4/2016
3:11:20 PM
I:\1841\1402\CADD\SHEETS\NORTH\06-Drainage Details\NAMR*DRNPROF*03.dgn

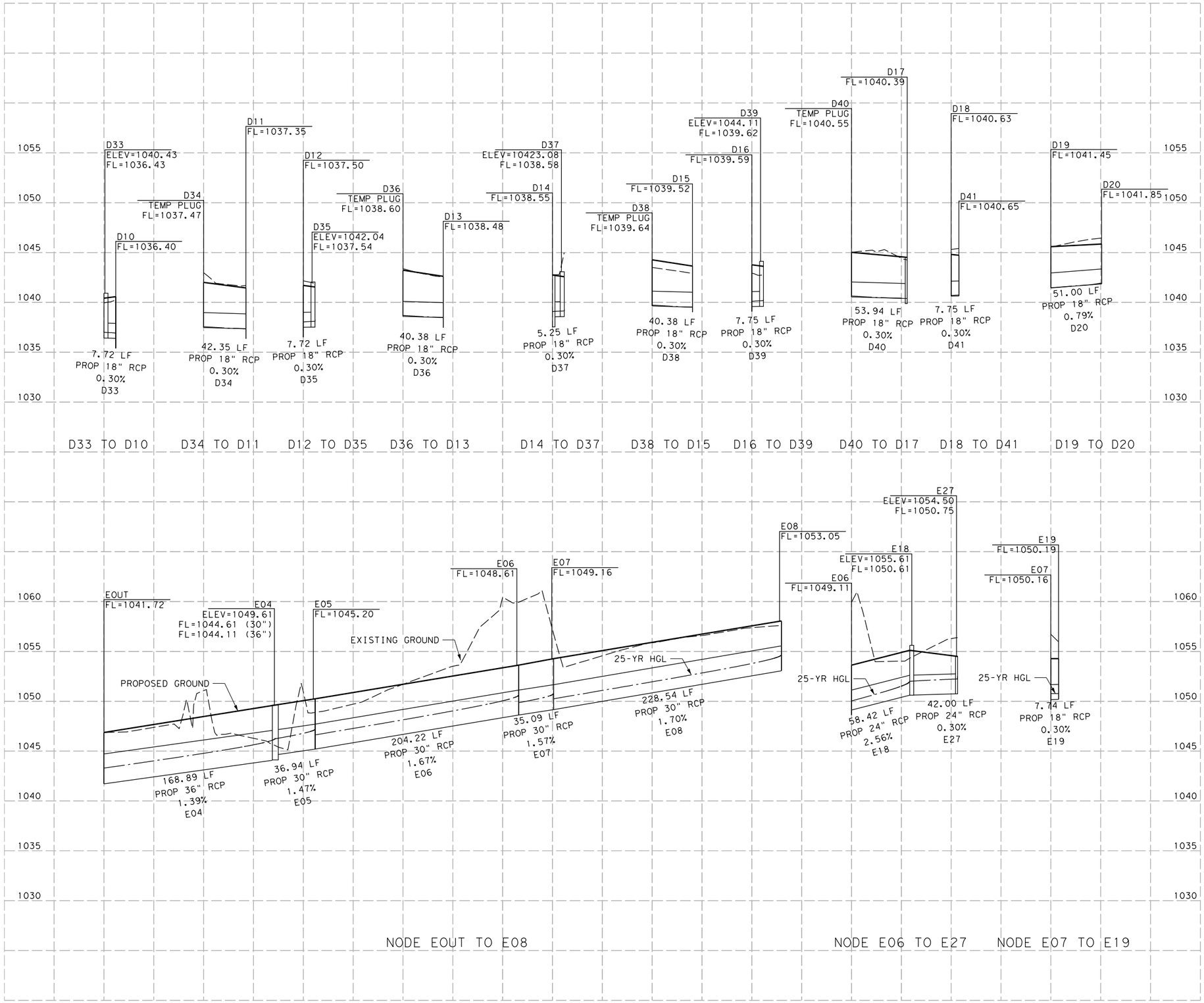

HORZ 0′ 50′ 100′

VERT 0′ 5′ 10′

SCALE IN FEET

NOTES:
1. EXISTING UTILITIES MAY NOT BE SHOWN. CONTRACTOR TO VERIFY PRIOR TO INSTALL.

STATE OF TEXAS
RILEY W. SLADEK
108887
LICENSED
PROFESSIONAL ENGINEER

10/4/2016

LJA Engineering, Inc.
FRN - F-1386

Binkley & Barfield, Inc
consulting engineers
Texas Registration Number F-257

CEDAR PARK

ANDERSON MILL RD
DRAINAGE PROFILE SHEETS
SYSTEM D, E

DESIGN BY:	RS	SCALE:	1"=100′ 1"=10′
DRAWN BY:	CM		
CHECKED BY:	DG		
APPROVED BY:	DG	SHEET:	4 OF 8
PROJECT NO:			
DATE:	10/4/2016	PAGE:	136

10/4/2016
3:11:20 PM
I:\1841\1402\CADD\SHEETS\NORTH\06-Drainage Details\NAMR*DRNPROF*04.dgn

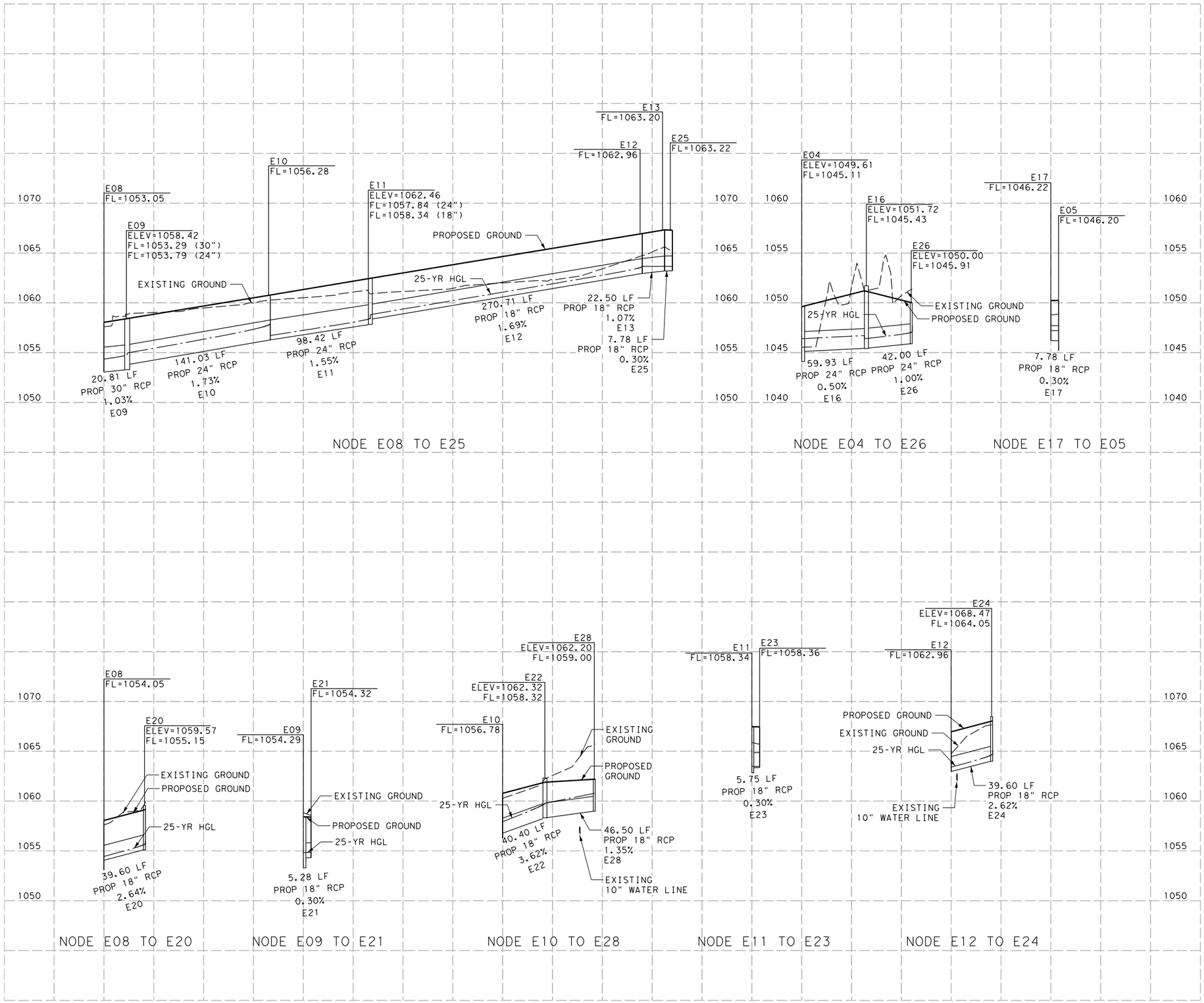

HORZ 0′ 50′ 100′

VERT 0′ 5′ 10′

SCALE IN FEET

NOTES:
1. EXISTING UTILITIES MAY NOT BE SHOWN. CONTRACTOR TO VERIFY PRIOR TO INSTALL.

STATE OF TEXAS
RILEY W. SLADEK
108887
LICENSED PROFESSIONAL ENGINEER
10/4/2016

LJA Engineering, Inc.
FRN - F-1386

Binkley & Barfield, Inc
consulting engineers
Texas Registration Number F-257

CEDAR PARK

ANDERSON MILL RD
DRAINAGE PROFILE SHEETS
SYSTEM E

DESIGN BY:	RS	SCALE:	1"=100′ 1"=10′
DRAWN BY:	CM		
CHECKED BY:	DG	SHEET:	5 OF 8
APPROVED BY:	DG		
PROJECT NO:		PAGE:	137
DATE:	10/4/2016		

10/4/2016
3:11:21 PM
I:\1841\1402\CADD\SHEETS\NORTH\06-Drainage Details\NAMR*DRNPROF*05.dgn

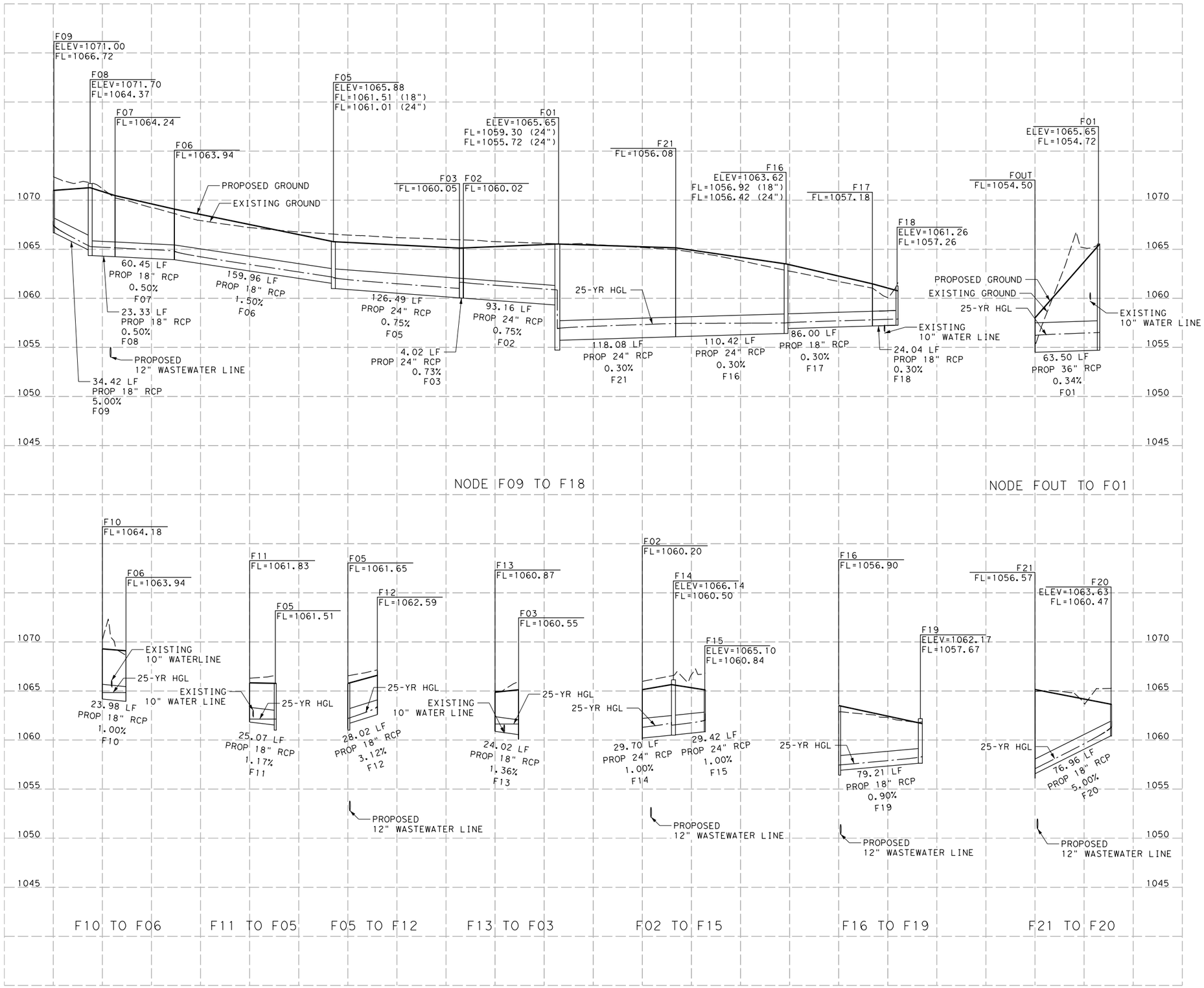

HORZ 0′ 50′ 100′
VERT 0′ 5′ 10′
SCALE IN FEET

NOTES:
1. EXISTING UTILITIES MAY NOT BE SHOWN. CONTRACTOR TO VERIFY PRIOR TO INSTALL.

STATE OF TEXAS
RILEY W. SLADEK
108887
LICENSED PROFESSIONAL ENGINEER
10/4/2016

LJA Engineering, Inc.
FRN - F-1386

Binkley & Barfield, Inc
consulting engineers
Texas Registration Number F-257

CEDAR PARK

ANDERSON MILL RD
DRAINAGE PROFILE SHEETS
SYSTEM F

DESIGN BY:	RS	SCALE:	1"=100′ 1"=10′
DRAWN BY:	CM		
CHECKED BY:	DG	SHEET: 6 OF 8	
APPROVED BY:	DG		
PROJECT NO:		PAGE: 138	
DATE:	10/4/2016		

10/4/2016
3:11:21 PM
I:\1841\1402\CADD\SHEETS\NORTH\06-Drainage Details\NAMR*DRNPROF*06.dgn

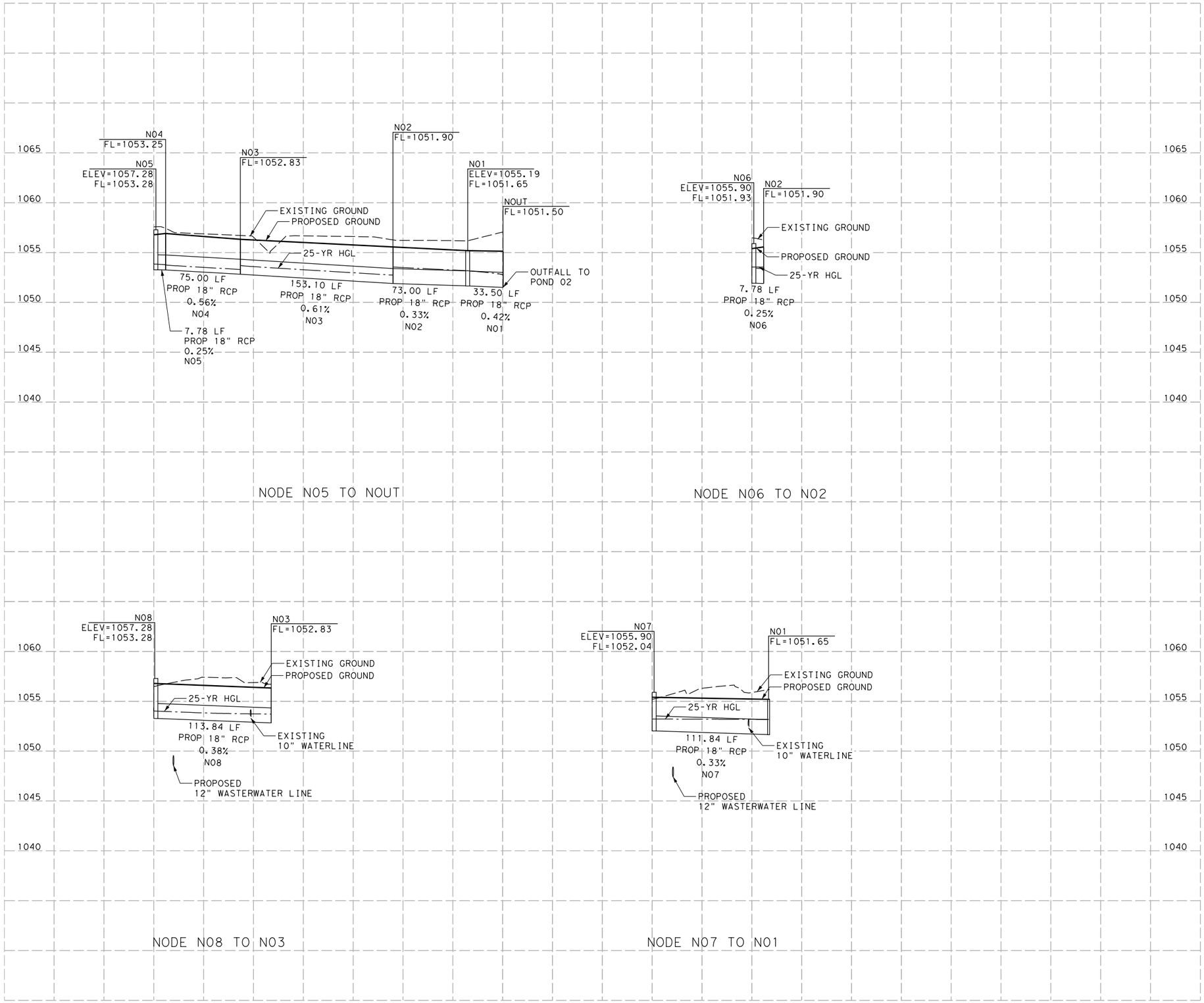

HORZ 0′ 50′ 100′

VERT 0′ 5′ 10′

SCALE IN FEET

NOTES:
1. EXISTING UTILITIES MAY NOT BE SHOWN. CONTRACTOR TO VERIFY PRIOR TO INSTALL.

STATE OF TEXAS
RILEY W. SLADEK
108887
LICENSED
PROFESSIONAL ENGINEER

10/4/2016

LJA Engineering, Inc.
FRN - F-1386

Binkley & Barfield, Inc
consulting engineers
Texas Registration Number F-257

CEDAR PARK

ANDERSON MILL RD
DRAINAGE PROFILE SHEETS
SYSTEM N

DESIGN BY:	RS	SCALE:	1"=100′ 1"=10′
DRAWN BY:	CM		
CHECKED BY:	DG	SHEET:	7 OF 8
APPROVED BY:	DG		
PROJECT NO:		PAGE:	139
DATE:	10/4/2016		

10/4/2016
3:11:22 PM
I:\1841\1402\CADD\SHEETS\NORTH\06-Drainage Details\NAMR*DRNPROF*07.dgn

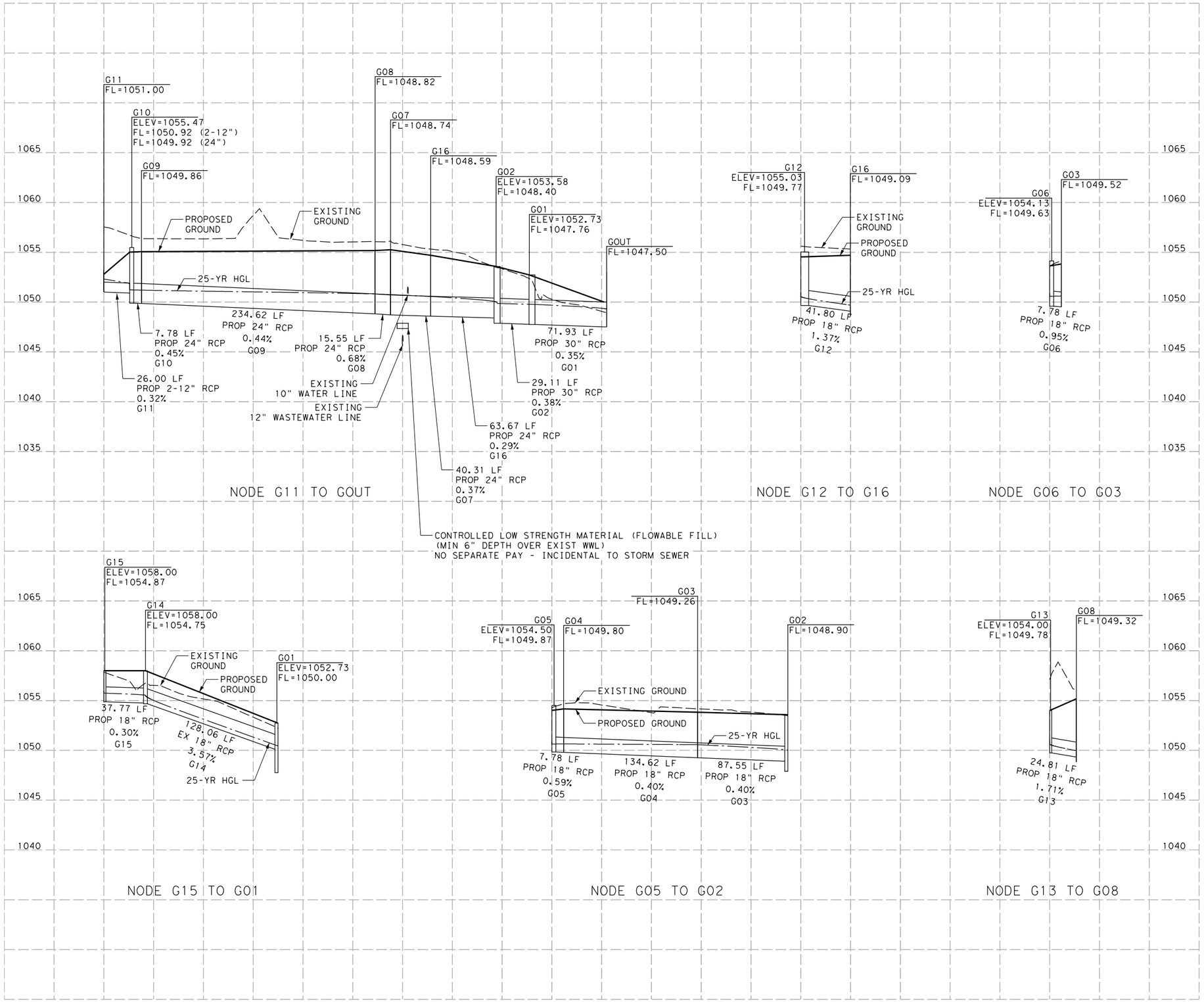

HORZ 0′ 50′ 100′
VERT 0′ 5′ 10′
SCALE IN FEET

NOTES:
1. EXISTING UTILITIES MAY NOT BE SHOWN. CONTRACTOR TO VERIFY PRIOR TO INSTALL.

STATE OF TEXAS
RILEY W. SLADEK
108887
LICENSED
PROFESSIONAL ENGINEER
10/4/2016

LJA Engineering, Inc.
FRN - F-1386

Binkley & Barfield, Inc
consulting engineers
Texas Registration Number F-257

CEDAR PARK

ANDERSON MILL RD
DRAINAGE PROFILE SHEETS
SYSTEM G

DESIGN BY:	RS	SCALE:	1"=100′ 1"=10′
DRAWN BY:	CM		
CHECKED BY:	DG		
APPROVED BY:	DG	SHEET: 8 OF 8	
PROJECT NO:			
DATE:	10/4/2016	PAGE: 140	

10/4/2016
3:11:22 PM
I:\1841\1402\CADD\SHEETS\NORTH\06-Drainage Details\NAMR*DRNPROF*08.dgn

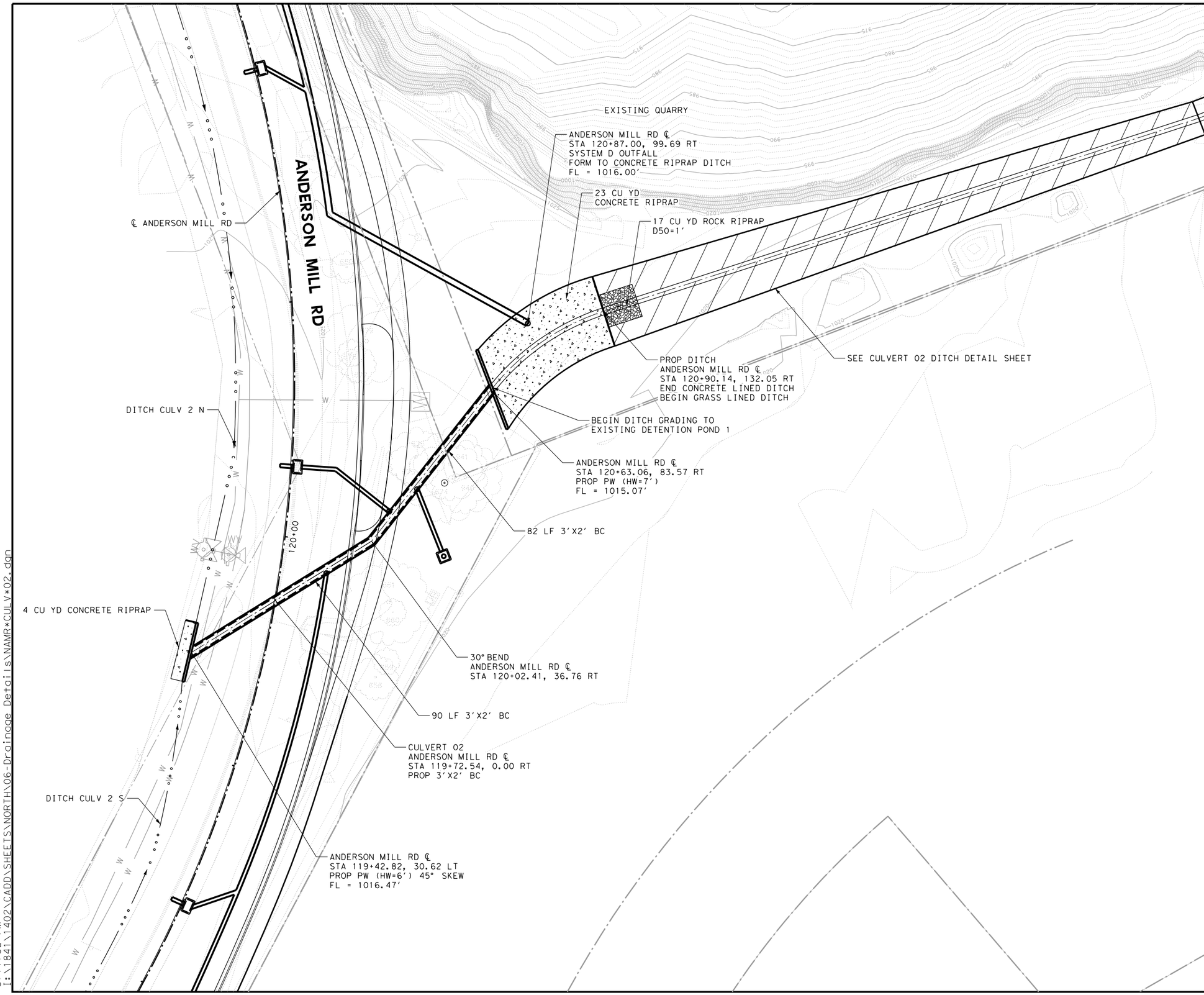

NOTES:
1. EXISTING UTILITIES MAY NOT BE SHOWN. CONTRACTOR TO VERIFY PRIOR TO INSTALL.

STATE OF TEXAS
RILEY W. SLADEK
108887
LICENSED
PROFESSIONAL ENGINEER
10/4/2016

LJA Engineering, Inc.
FRN - F-1386

Binkley & Barfield, Inc
consulting engineers
Texas Registration Number F-257

CEDAR PARK

ANDERSON MILL RD
DRAINAGE CULVERT LAYOUTS
CULVERT 02 PLAN

DESIGN BY:	RS	SCALE:	1"=40'
DRAWN BY:	CM		
CHECKED BY:	DG	SHEET:	1 OF 2
APPROVED BY:	DG		
PROJECT NO:		PAGE:	141
DATE:	10/4/2016		

10/4/2016
3:11:32 PM
I:\1841\1402\CADD\SHEETS\NORTH\06-Drainage Details\NAMR*CULV*02.dgn

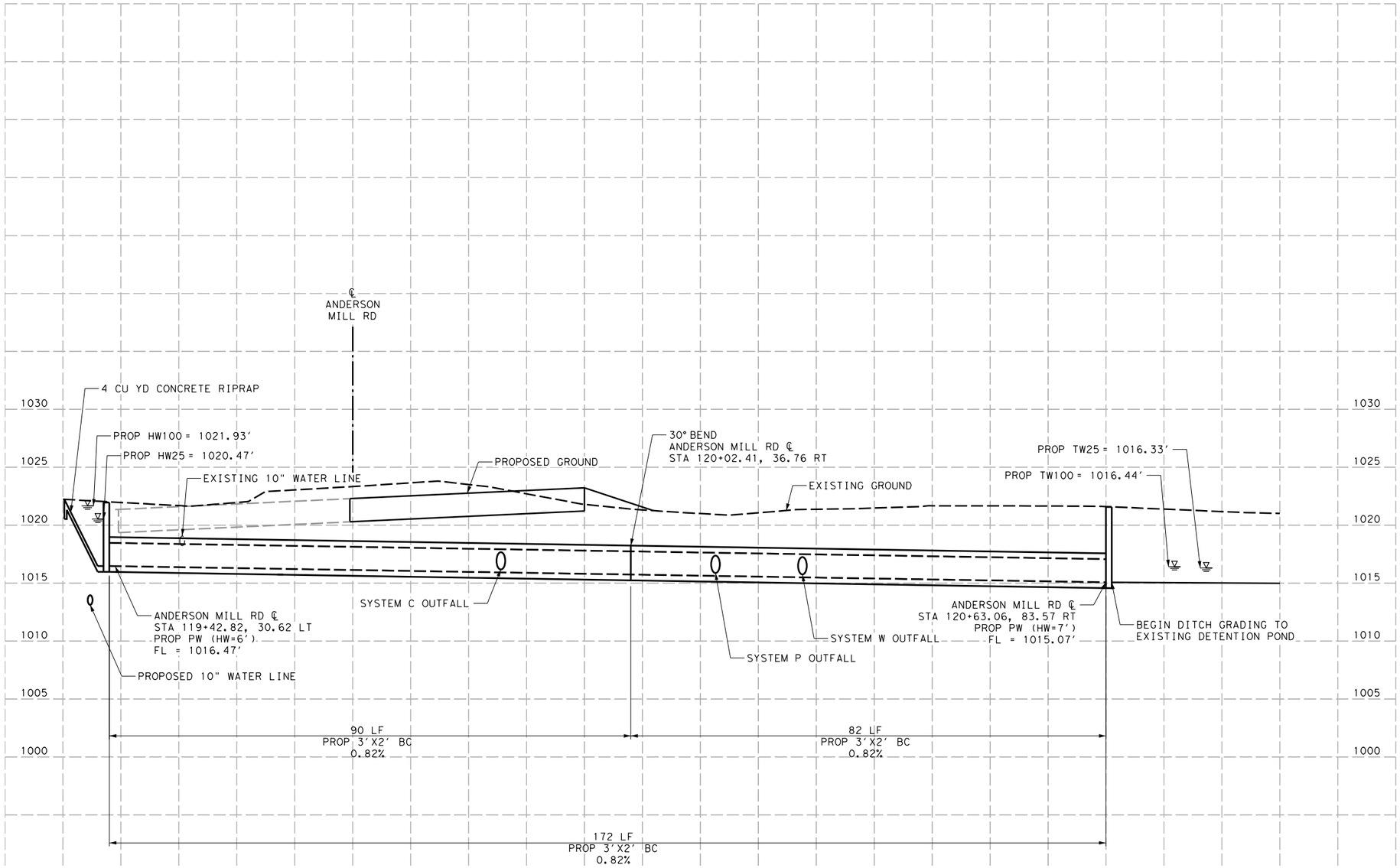

CULVERT 02
℄ ANDERSON MILL RD
STA 119+72.54
PROPOSED 3' X 2' X 172' BC
PROP PW (HW=6') UPSTREAM
PROP PW (HW=7') DOWNSTREAM

0' 5' 10' 20'
SCALE: 1"=20' - HORZ
1"=10' - VERT

PROPOSED HYDRAULIC DATA	
Q_{25} (CFS)	52.05
Q_{100} (CFS)	65.71
V_{25} (FT/S)	9.73
V_{100} (FT/S)	10.95
HW_{25} (FT)	1020.47
HW_{100} (FT)	1021.93
TW_{25} (FT)	1016.33
TW_{100} (FT)	1016.44

STATE OF TEXAS
RILEY W. SLADEK
108887
LICENSED
PROFESSIONAL ENGINEER
10/4/2016

LJA Engineering, Inc.
FRN - F-1386

Binkley & Barfield, Inc
consulting engineers
Texas Registration Number F-257

CEDAR PARK

ANDERSON MILL RD
DRAINAGE CULVERT LAYOUTS
CULVERT 02 PROFILE

DESIGN BY:	RS	SCALE:
DRAWN BY:	CM	
CHECKED BY:	DG	SHEET: 2 OF 2
APPROVED BY:	DG	
PROJECT NO:		
DATE:	10/4/2016	PAGE: 142

10/4/2016
3:11:33 PM
I:\1841\1402\CADD\SHEETS\NORTH\06-Drainage Details\NAMR*CULV*02*PROF.dgn

```
Beginning chain CULVO2DITCH description
*****************************************************************************
                                   Curve Data
                                   *----------*
Curve CULVO2DITCH-1
P.I.  Station          10+30.31  N      10,154,462.5440  E      3,076,871.6421
Delta        =     33° 43′ 31.04″ (RT)
Degree       =     57° 17′ 44.81″
Tangent      =            30.3111
Length       =            58.8617
Radius       =           100.0000
External     =             4.4929
Long Chord   =            58.0157
Mid. Ord.    =             4.2997
P.C.  Station          10+00.00  N      10,154,438.7589  E      3,076,852.8529
P.T.  Station          10+58.86  N      10,154,471.8943  E      3,076,900.4750
C.C.                             N      10,154,376.7711  E      3,076,931.3227
Back         = N  38° 18′ 26.03″ E
Ahead        = N  72° 01′ 57.07″ E
Chord Bear   = N  55° 10′ 11.55″ E

Course from PT CULVO2DITCH-1 to DITCH002 N 72° 01′ 57.07″ E Dist 266.1095

Point DITCH002        N  10,154,553.9830 E   3,077,153.6069 Sta      13+24.97

Course from DITCH002 to PC CULVO2DITCH-2 N 68° 54′ 56.18″ E Dist 956.3586
                                   Curve Data
                                   *----------*
Curve CULVO2DITCH-2
P.I.  Station          23+20.01  N      10,154,911.9406  E      3,078,082.0284
Delta        =     75° 27′ 00.00″ (RT)
Degree       =    114° 35′ 29.61″
Tangent      =            38.6793
Length       =            65.8425
Radius       =            50.0000
External     =            13.2146
Long Chord   =            61.1872
Mid. Ord.    =            10.4522
P.C.  Station          22+81.33  N      10,154,898.0260  E      3,078,045.9387
P.T.  Station          23+47.17  N      10,154,880.5040  E      3,078,104.5634
C.C.                             N      10,154,851.3734  E      3,078,063.9258
Back         = N  68° 54′ 56.17″ E
Ahead        = S  35° 38′ 03.83″ E
Chord Bear   = S  73° 21′ 33.83″ E

Course from PT CULVO2DITCH-2 to PC CULVO2DITCH-3 S 35° 38′ 03.83″ E Dist 108.5323
                                   Curve Data
                                   *----------*
Curve CULVO2DITCH-3
P.I.  Station          24+64.36  N      10,154,785.2596  E      3,078,172.8382
Delta        =     19° 38′ 31.00″ (LT)
Degree       =    114° 35′ 29.61″
Tangent      =             8.6553
Length       =            17.1408
Radius       =            50.0000
External     =             0.7436
Long Chord   =            17.0570
Mid. Ord.    =             0.7327
P.C.  Station          24+55.70  N      10,154,792.2943  E      3,078,167.7955
P.T.  Station          24+72.85  N      10,154,780.3294  E      3,078,179.9521
C.C.                             N      10,154,821.4248  E      3,078,208.4331
Back         = S  35° 38′ 03.83″ E
Ahead        = S  55° 16′ 34.83″ E
Chord Bear   = S  45° 27′ 19.33″ E

Course from PT CULVO2DITCH-3 to PC CULVO2DITCH-4 S 55° 16′ 34.83″ E Dist 242.3556
                                   Curve Data
                                   *----------*
Curve CULVO2DITCH-4
P.I.  Station          27+27.90  N      10,154,635.0456  E      3,078,389.5835
Delta        =     14° 28′ 26.92″ (LT)
Degree       =     57° 17′ 44.81″
Tangent      =            12.6987
Length       =            25.2621
Radius       =           100.0000
External     =             0.8031
Long Chord   =            25.1950
Mid. Ord.    =             0.7967
P.C.  Station          27+15.20  N      10,154,642.2790  E      3,078,379.1464
P.T.  Station          27+40.46  N      10,154,630.6505  E      3,078,401.4973
C.C.                             N      10,154,724.4699  E      3,078,436.1083
Back         = S  55° 16′ 34.83″ E
Ahead        = S  69° 45′ 01.75″ E
Chord Bear   = S  62° 30′ 48.29″ E

Course from PT CULVO2DITCH-4 to DITCH003 S 69° 45′ 01.75″ E Dist 28.9987

Point DITCH003        N  10,154,620.6137 E   3,078,428.7038 Sta      27+69.46

*****************************************************************************
Ending chain CULVO2DITCH description
```

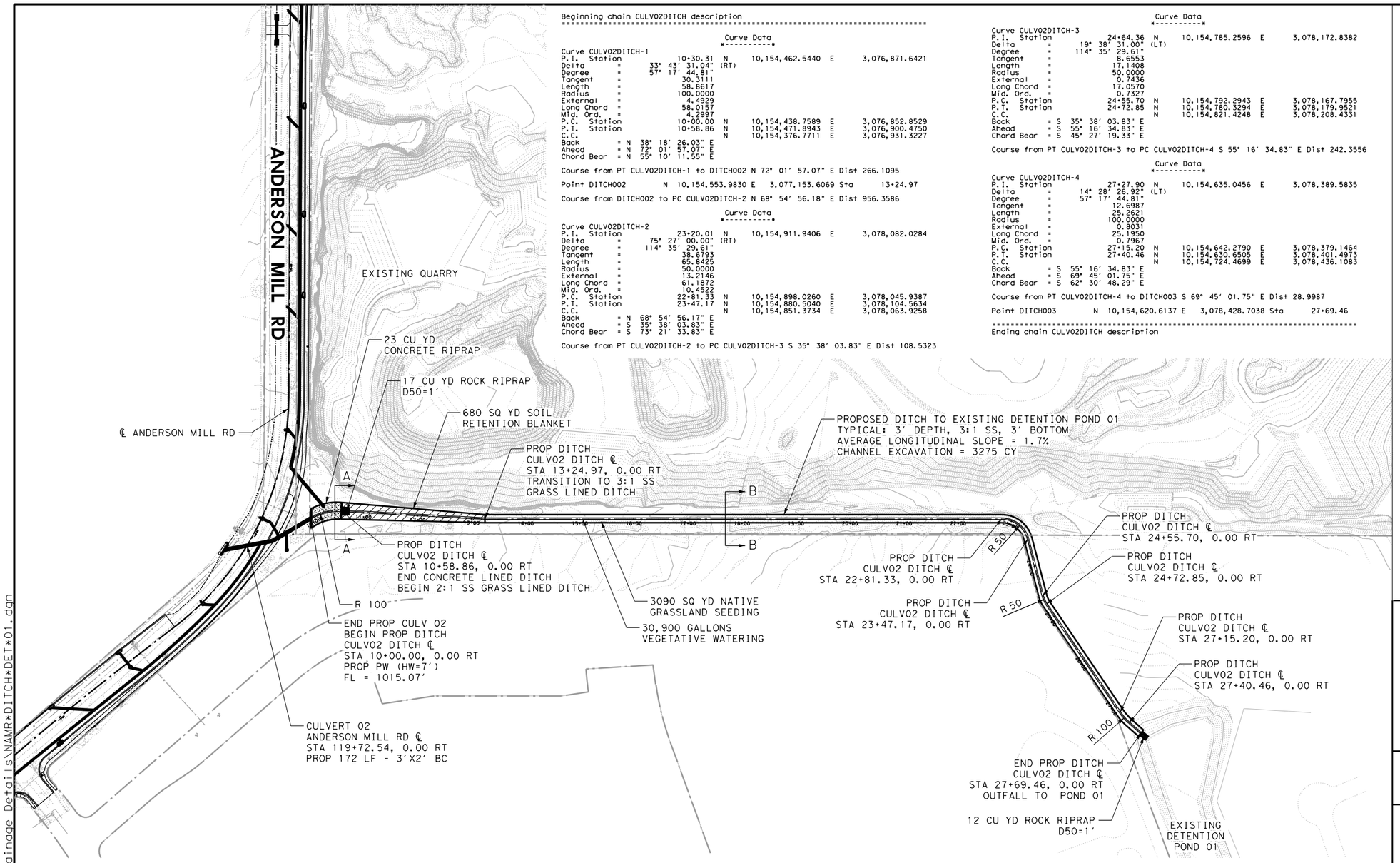

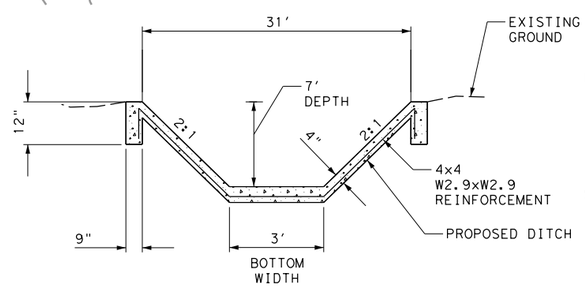

CONCRETE-LINED
TYPICAL SECTION A-A

N.T.S

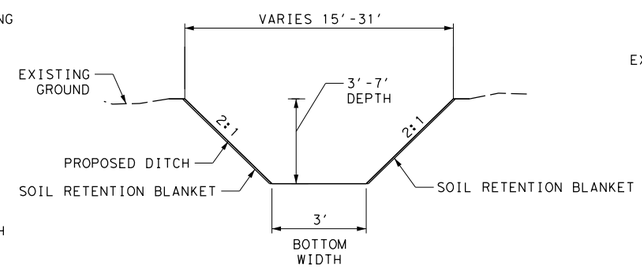

SOIL RETENTION BLANKET
TYPICAL SECTION B-B

N.T.S

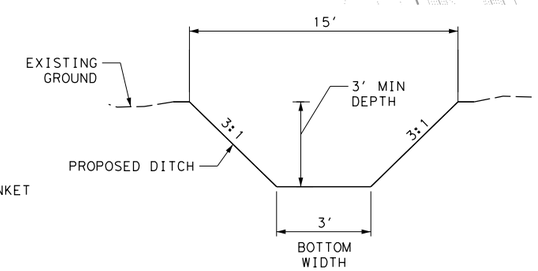

GRASS-LINED
TYPICAL SECTION B-B

N.T.S

0′ 50′ 100′ 200′
SCALE IN FEET

PROPOSED CONCRETE DITCH CALCS	
Manning's n-value	0.016
Flow 25 (CFS)	52.05
Flow 100 (CFS)	65.71
Velocity 25 (FT/S)	8.87
Velocity 100 (FT/S)	9.45
Depth 25 (FT)	0.98
Depth 100 (FT)	1.10

PROPOSED GRASS DITCH CALCS	
Manning's n-value	0.035
Flow 25 (CFS)	52.05
Flow 100 (CFS)	65.71
Velocity 25 (FT/S)	5.02
Velocity 100 (FT/S)	5.31
Depth 25 (FT)	1.43
Depth 100 (FT)	1.59

NOTES:
1. EXISTING UTILITIES MAY NOT BE SHOWN. CONTRACTOR TO VERIFY PRIOR TO INSTALL.

STATE OF TEXAS
RILEY W. SLADEK
108887
LICENSED
PROFESSIONAL ENGINEER
10/4/2016

LJA Engineering, Inc.
FRN - F-1386

Binkley & Barfield, Inc
consulting engineers
Texas Registration Number F-257

CEDAR PARK

ANDERSON MILL RD
CULVERT 02 DITCH DETAIL

DESIGN BY:	RS	SCALE:	1"=200′
DRAWN BY:	CM		
CHECKED BY:	RS	SHEET:	1 OF 1
APPROVED BY:	DG		
PROJECT NO:		PAGE:	143
DATE:	10/4/2016		

10/4/2016
3:11:37 PM
I:\1841\1402\CADD\SHEETS\NORTH\06-Drainage Details\NAMR*DITCH*DET*01.dgn

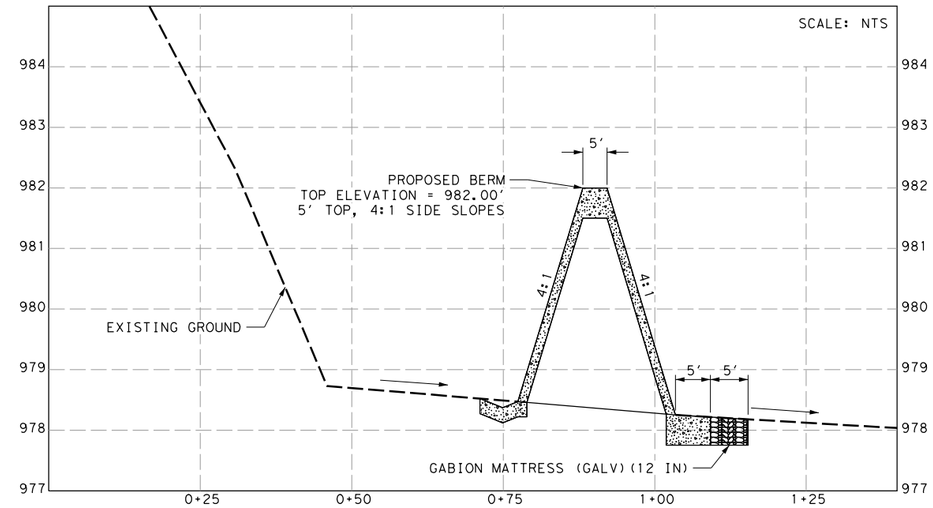

SECTION A-A

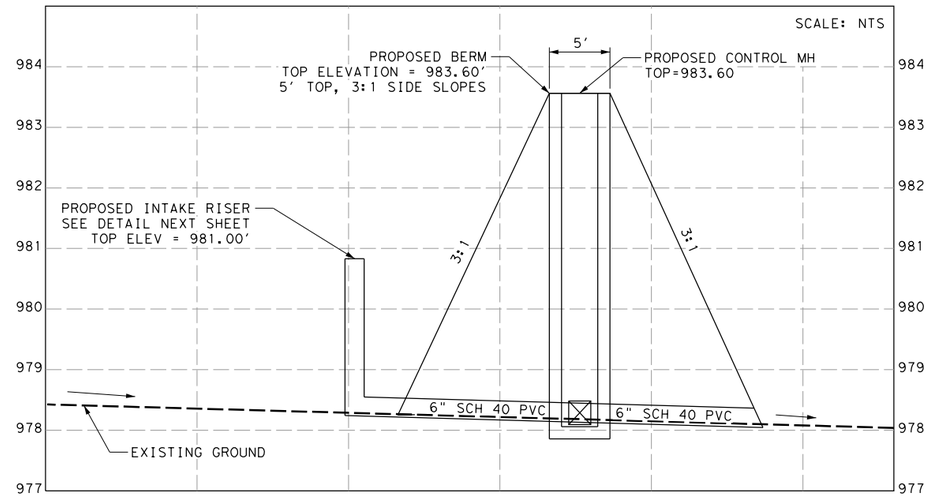

SECTION B-B

* REQUIRED CAPTURE VOLUME IS 26,007 CU FT AND POND HAS A CAPTURE VOLUME OF 26,055 CU FT.

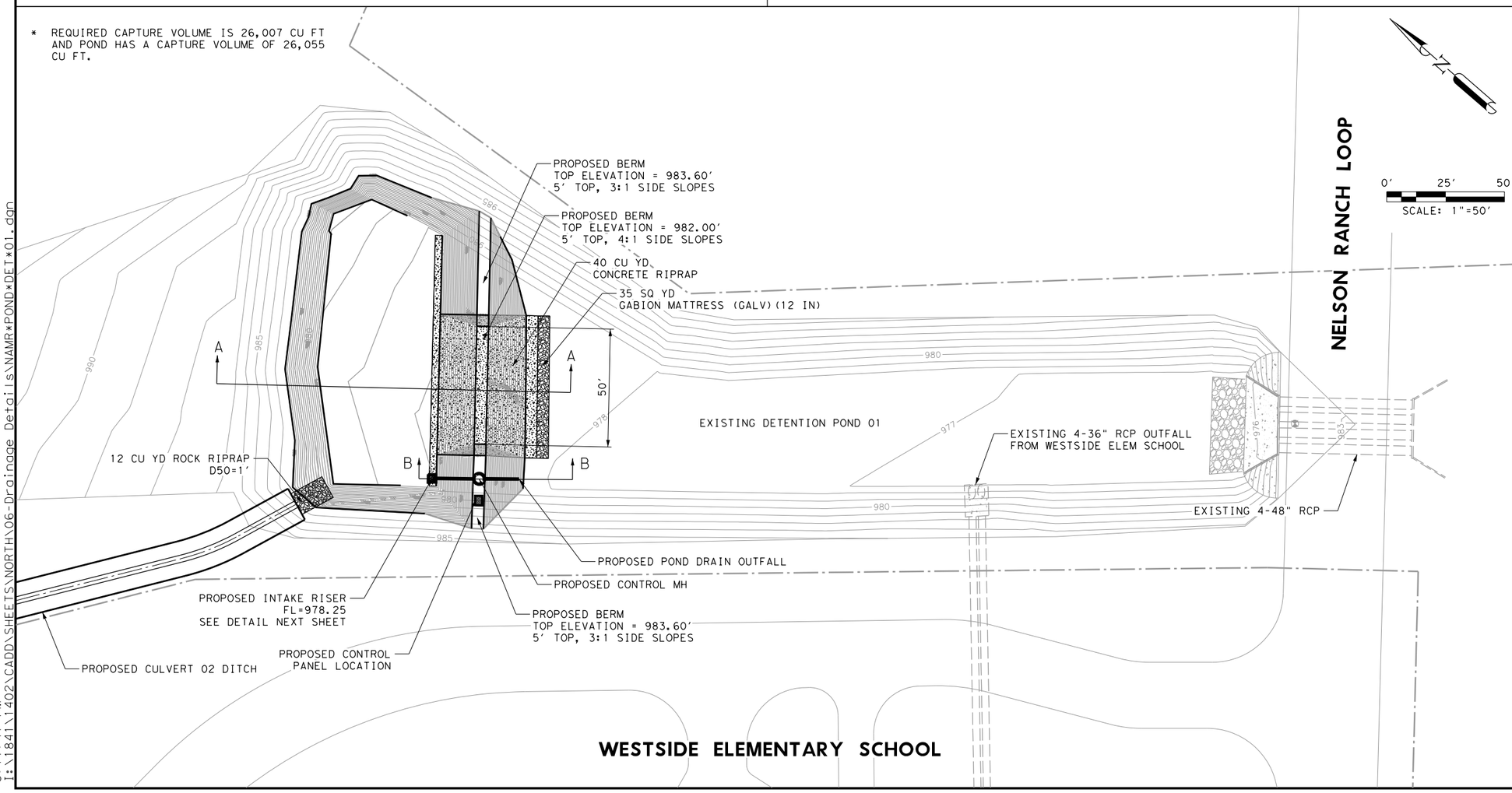

NOTES:
1. EXISTING UTILITIES MAY NOT BE SHOWN. CONTRACTOR TO VERIFY PRIOR TO INSTALL.

NUMBER	DATE	REVISION	APPROVED

STATE OF TEXAS
RILEY W. SLADEK
108887
LICENSED
PROFESSIONAL ENGINEER
10/4/2016

LJA Engineering, Inc.
FRN - F-1386

Binkley & Barfield, Inc
consulting engineers
Texas Registration Number F-257

CEDAR PARK

ANDERSON MILL RD
DETENTION POND 01
DETAIL SHEET

DESIGN BY:	RS	SCALE:	1"=50'
DRAWN BY:	CM		
CHECKED BY:	RS	SHEET:	1 OF 5
APPROVED BY:	DG		
PROJECT NO:			
DATE:	10/4/2016	PAGE:	144

10/4/2016
3:11:41 PM
I:\1841\1402\CADD\SHEETS\NORTH\06-Drainage Details\NAMR*POND*DET*01.dgn

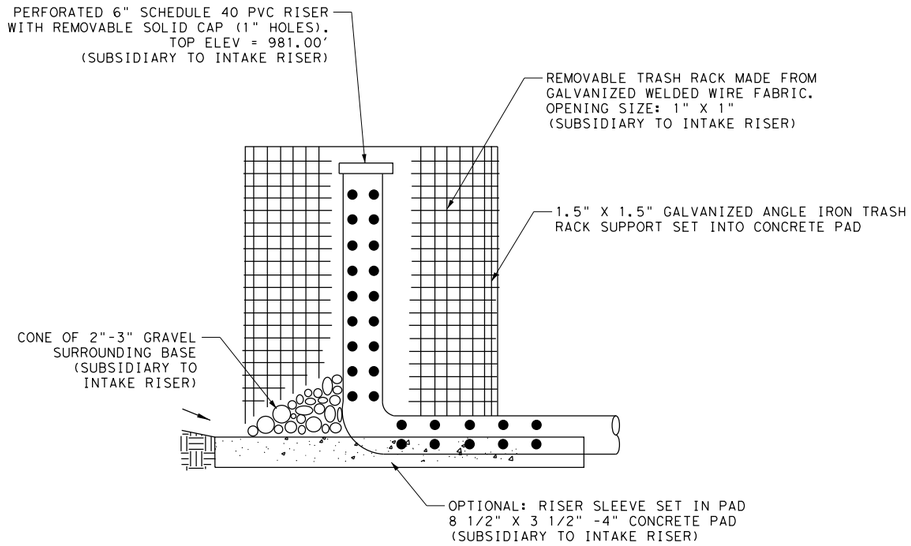

SIDE VIEW OF RISER

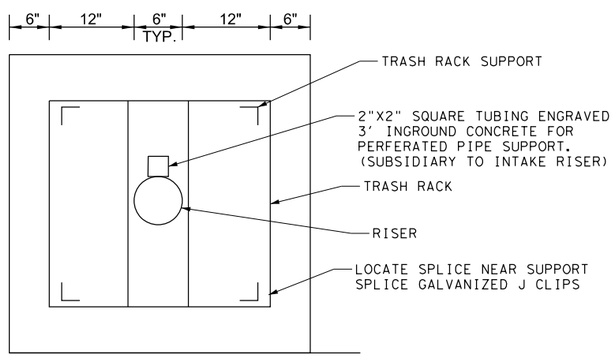

TOP VIEW OF RISER

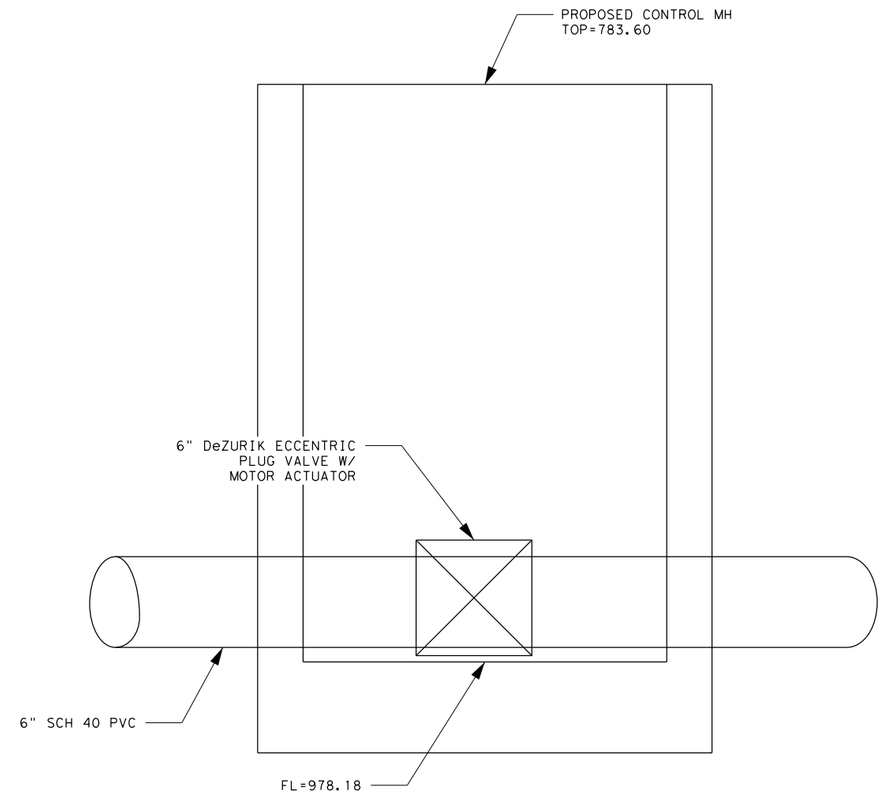

CONTROL MANHOLE

STATE OF TEXAS
RILEY W. SLADEK
108887
LICENSED
PROFESSIONAL ENGINEER
10/4/2016

LJA Engineering, Inc.
FRN - F-1386

Binkley & Barfield, Inc
consulting engineers
Texas Registration Number F-257

CEDAR PARK

ANDERSON MILL RD
DETENTION POND 01
DETAIL SHEET

DESIGN BY:	RS	SCALE:	NTS
DRAWN BY:	CM		
CHECKED BY:	RS	SHEET:	2 OF 5
APPROVED BY:	DG		
PROJECT NO:			
DATE:	10/4/2016	PAGE:	145

10/4/2016
3:11:43 PM
I:\1841\1402\CADD\SHEETS\NORTH\06-Drainage Details\NAMR*POND*DET*02.dgn

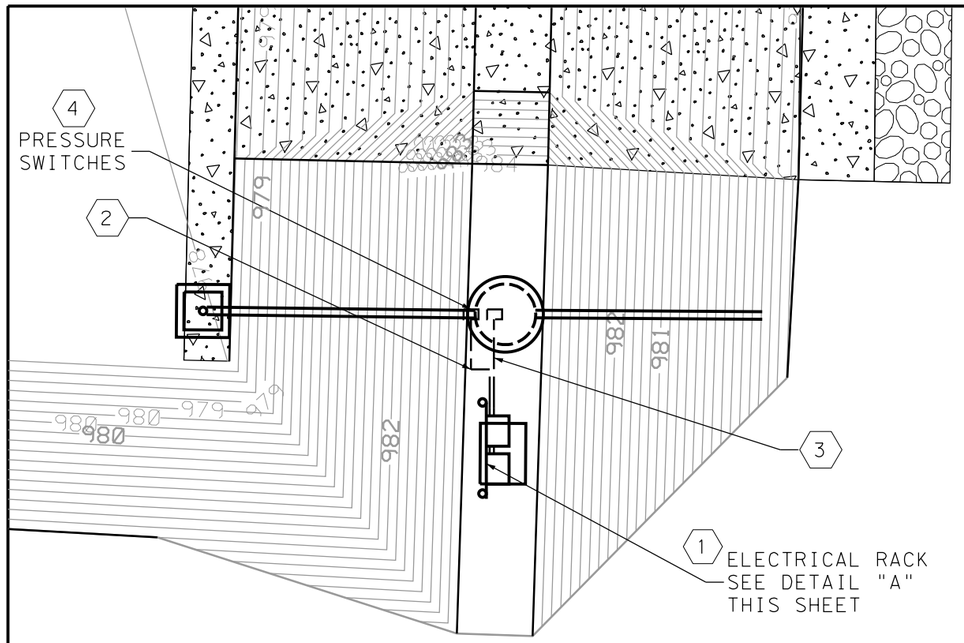

1 SITE PLAN

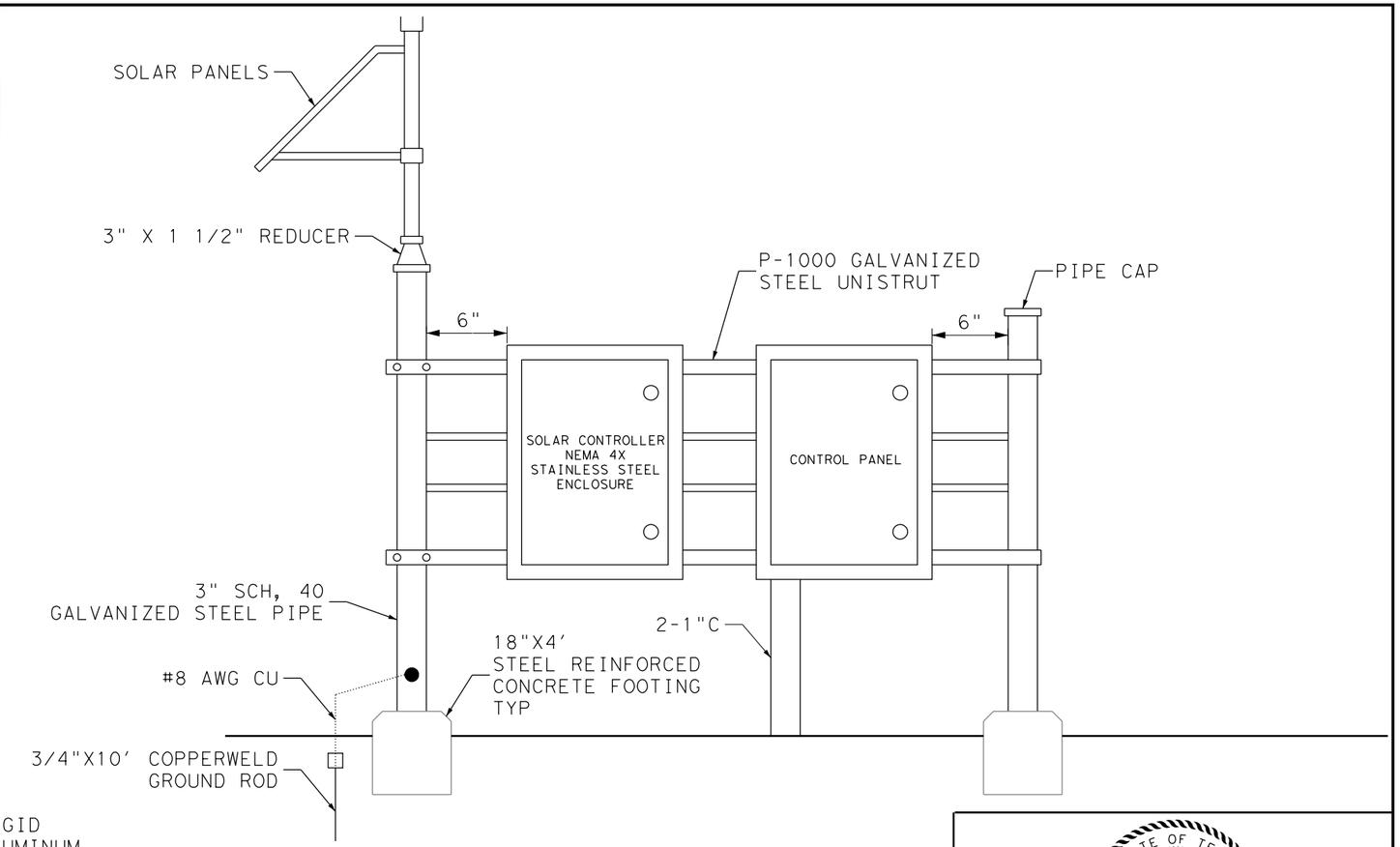

A SUPPORT RACK DETAIL

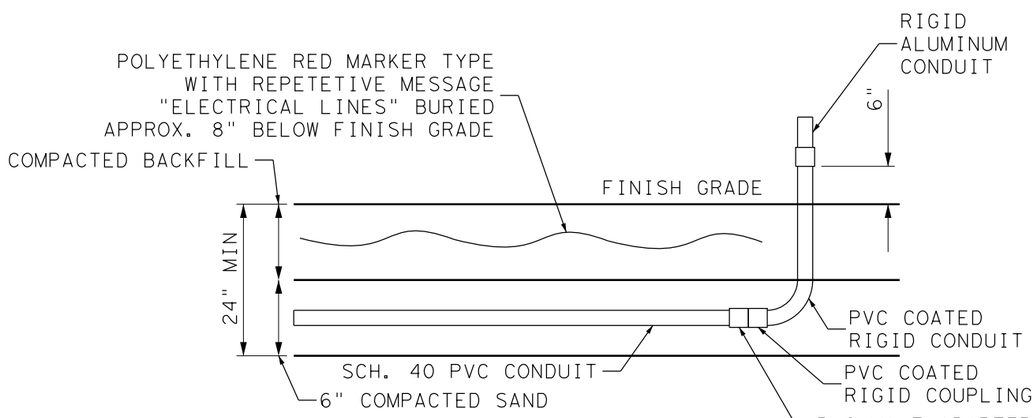

B UNDERGROUND CONDUIT DETAIL

KEYNOTES

1. INSTALL AN ELECTRICAL RACK WITH SOLAR PANEL, CONTROLLER, BATTERIES, AND A SEPARATE CONTROL PANEL. SEE DETAIL "A", THIS SHEET.
2. 4#12(C), 2#12G, XHHW-2, 1"C. FOR PRESSURE SWITCH SIGNAL. INSTALL PER DETAIL "B", THIS SHEET.
3. 2#12(P), #12(G), 4#12(C), XHHW-2, 1"C. FOR VALVE POWER AND CONTROL. INSTALL PER DETAIL "B", THIS SHEET.
4. INSTALL A WEATHERPROOF PRESSURE SWITCH ON THE PIPING FROM THE POND. SWITCH SHALL BE A MERCOID MODEL EDAW-N1E1-02TO, SPST CONTACTS THAT CLOSE ON INCREASING PRESSURE.

STATE OF TEXAS
BARRY J. GENTZ
115669
LICENSED
PROFESSIONAL ENGINEER

LJA Engineering, Inc.
FRN - F-1386

Binkley & Barfield, Inc
consulting engineers
Texas Registration Number F-257

CEDAR PARK

ANDERSON MILL RD
DETENTION POND 01
DETAIL SHEET

DESIGN BY:	RS	SCALE:	NTS
DRAWN BY:	CM		
CHECKED BY:	RS	SHEET:	3 OF 5
APPROVED BY:	DG		
PROJECT NO:		PAGE:	146
DATE:	10/4/2016		

10/4/2016
3:11:43 PM
I:\1841\1402\CADD\SHEETS\NORTH\06-Drainage Details\NAMR*POND*ELEC*01.dgn

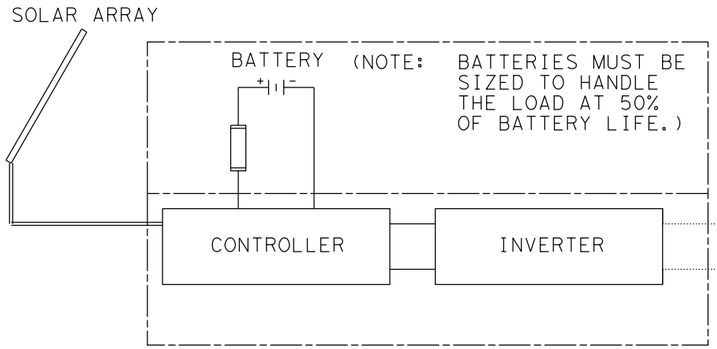

NOTE THAT SOLAR PANEL, CONTROLLER, AND BATTERY MUST BE FURNISHED IN COORDINATION WITH THE VALVE ELECTRICAL REQUIREMENTS. REFER TO VALVE SPECIFICATIONS FOR DETAILS.

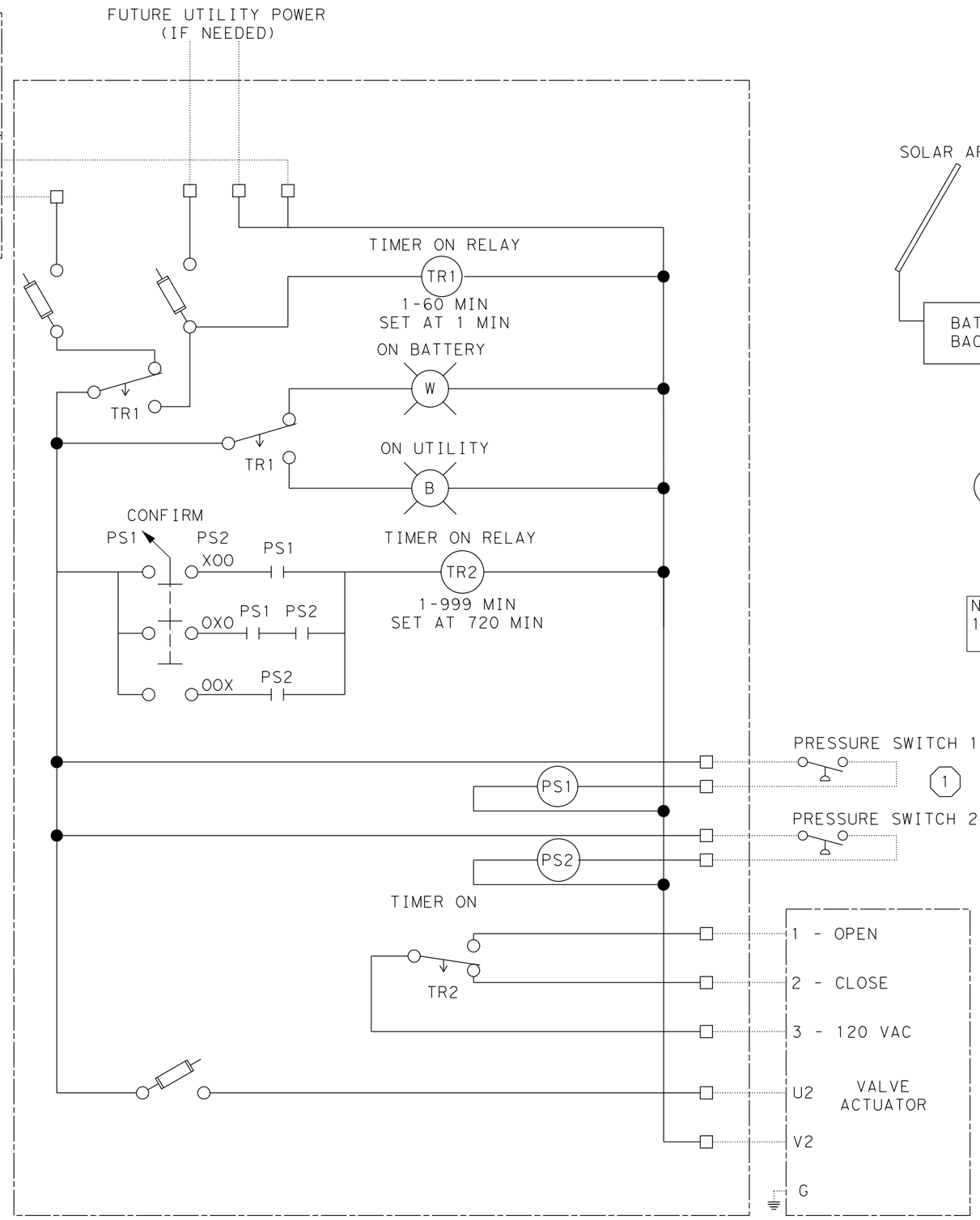

1 CONTROL SCHEMATIC

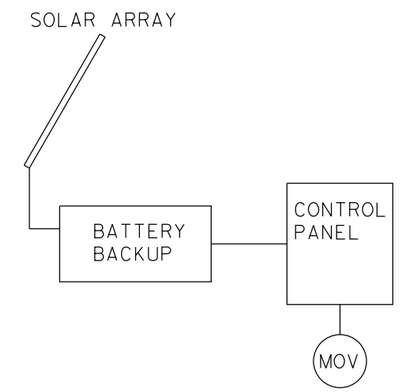

2 ONE LINE DIAGRAM

NOTES:
1. PRESSURE SWITCH SHALL BE MERCOID MODEL #EDAW-N1E1-02TO

STATE OF TEXAS
BARRY J. GENTZ
115669
LICENSED PROFESSIONAL ENGINEER

LJA Engineering, Inc.
FRN - F-1386

Binkley & Barfield, Inc
consulting engineers
Texas Registration Number F-257

CEDAR PARK

ANDERSON MILL RD
DETENTION POND 01
DETAIL SHEET

DESIGN BY:	RS	SCALE:	NTS
DRAWN BY:	CM		
CHECKED BY:	RS	SHEET:	4 OF 5
APPROVED BY:	DG		
PROJECT NO:			
DATE:	10/4/2016	PAGE:	147

10/4/2016
3:11:44 PM
I:\1841\1402\CADD\SHEETS\NORTH\06-Drainage Details\NAMR*POND*ELEC*02.dgn

DETENTION RESULTS	25-YEAR	100-YEAR
EXISTING FLOW AT OUTFALL (CFS)	33.18	41.71
PROPOSED PEAK FLOW AT OUTFALL (W/O DETENTION) (CFS)	37.94	47.7
PROPOSED PEAK FLOW AT OUTFALL (W/ DETENTION) (CFS)	33.11	40.36
MAX STAGE OF POND (FT)	2.81	3.55

POINT	CHAIN	STATION	OFFSET	ELEV
1	AMRN	172+68.30	77.00 LT	1051.70
2	AMRN	172+68.31	73.00 LT	1051.66
3	AMRN	174+12.30	77.00 LT	1051.17
4	AMRN	174+12.30	73.00 LT	1051.06

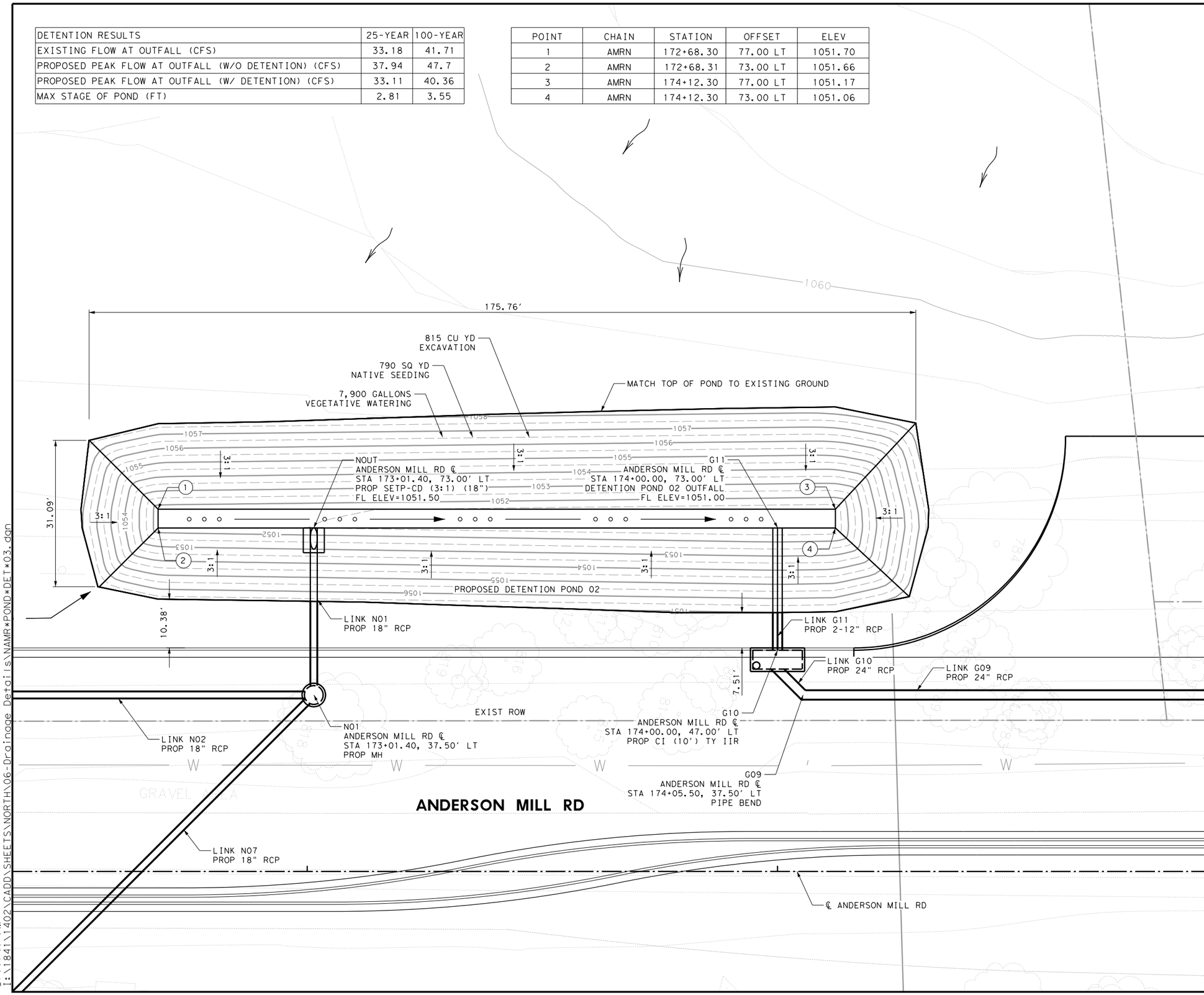

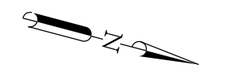

0' 5' 10' 20'
SCALE: 1"=20'

LEGEND

- EXISTING UTILITY
- EXISTING PLANIMETRICS
- DITCH FLOWLINE
- PROPOSED STORM SEWER
- EXISTING STORM SEWER

NOTES:
1. CURB INLETS MEASURED FROM TOP FACE OF CURB.
2. GRATE INLETS MEASURED FROM TOP CENTER OF GRATE.
3. THE MATERIAL AND CONSTRUCTION PRACTICES SHALL BE IN ACCORDANCE WITH THE STANDARD SPECIFICATIONS OF THE CITY OF CEDAR PARK, CITY OF AUSTIN, AND TXDOT (WHERE APPLICABLE) AS PRESENTED IN THE LATEST EDITION, AND/OR AS OTHERWISE CONTAINED ON THE PLANS.

STATE OF TEXAS
RILEY W. SLADEK
108887
LICENSED
PROFESSIONAL ENGINEER
10/4/2016

LJA Engineering, Inc.
FRN - F-1386

Binkley & Barfield, Inc
consulting engineers
Texas Registration Number F-257

CEDAR PARK

ANDERSON MILL RD
DETENTION POND 02
DETAIL SHEET

DESIGN BY:	RS	SCALE:	1"=20'
DRAWN BY:	CM		
CHECKED BY:	RS	SHEET:	5 OF 5
APPROVED BY:	DG		
PROJECT NO:			
DATE:	10/4/2016	PAGE:	148

10/4/2016
3:11:47 PM
I:\1841\1402\CADD\SHEETS\NORTH\06-Drainage Details\NAMR*POND*DET*03.dgn

AREA ID	AREA (ac)	AREA TIME OF CONC (min)	AREA TIME OF CONC USED (min)	AREA C-VALUE	AREA 25 YR INTENSITY (in/hr)	AREA 25 YR DISCHARGE (cfs)	AREA 100 YR INTENSITY (in/hr)	AREA 100 YR DISCHARGE (cfs)
A01	0.29	2.00	5.00	0.78	11.78	2.64	14.88	3.33
A02	0.43	2.00	5.00	0.73	11.78	3.71	14.88	4.68
B02	0.35	2.00	5.00	0.84	11.78	3.42	14.88	4.32
C06	0.23	2.00	5.00	0.86	11.78	2.33	14.88	2.94
C09	0.30	2.00	5.00	0.89	11.78	3.12	14.88	3.94
C10	0.17	2.00	5.00	0.84	11.78	1.71	14.88	2.16
C12	0.10	2.00	5.00	0.95	11.78	1.14	14.88	1.44
C14	0.14	2.00	5.00	0.93	11.78	1.55	14.88	1.96
D20	0.46	4.00	5.00	0.82	11.78	4.47	14.88	5.64
D27	0.13	2.00	5.00	0.86	11.78	1.27	14.88	1.60
D29	0.17	2.00	5.00	0.86	11.78	1.70	14.88	2.15
D31	0.18	2.00	5.00	0.84	11.78	1.74	14.88	2.20
D33	0.20	2.00	5.00	0.80	11.78	1.91	14.88	2.41
D35	0.21	2.00	5.00	0.81	11.78	1.97	14.88	2.48
D37	0.20	2.00	5.00	0.82	11.78	1.92	14.88	2.43
D39	0.19	2.00	5.00	0.86	11.78	1.88	14.88	2.38
E16	0.23	2.00	5.00	0.77	11.78	2.05	14.88	2.59
E18	0.26	2.00	5.00	0.80	11.78	2.47	14.88	3.12
E20	0.27	2.00	5.00	0.83	11.78	2.62	14.88	3.30
E22	0.31	2.00	5.00	0.83	11.78	3.09	14.88	3.90
E24	0.35	2.00	5.00	0.81	11.78	3.34	14.88	4.22
E26	1.75	7.00	7.00	0.60	10.61	11.08	13.37	13.97
E27	2.57	9.00	9.00	0.52	9.67	12.88	12.18	16.22
E28	3.24	12.00	12.00	0.58	8.57	16.07	10.79	20.22
F08	0.11	2.00	5.00	0.95	11.78	1.24	14.88	1.56
F09	0.54	5.00	5.00	0.66	11.78	4.19	14.88	5.29
F12	0.50	5.00	5.00	0.82	11.78	4.81	14.88	6.08
F14	0.23	1.00	5.00	0.86	11.78	2.29	14.88	2.89
F15	2.26	13.00	13.00	0.61	8.27	11.44	10.40	14.38
F18	0.23	1.00	5.00	0.86	11.78	2.29	14.88	2.90
F19	0.33	1.00	5.00	0.78	11.78	2.98	14.88	3.77
F20	0.87	6.00	6.00	0.62	11.16	6.01	14.08	7.58
G05	0.34	1.00	5.00	0.86	11.78	3.47	14.88	4.38
G06	0.45	1.00	5.00	0.85	11.78	4.48	14.88	5.66
G10	0.21	1.00	5.00	0.85	11.78	2.08	14.88	2.63
G11	3.91	1.00	5.00	0.67	11.78	30.80	14.88	38.90
G12	0.44	1.00	5.00	0.85	11.78	4.40	14.88	5.56
G13	1.09	15.00	15.00	0.60	7.72	5.07	9.71	6.37
G15	0.66	8.00	8.00	0.61	10.11	4.08	12.74	5.14
J02	0.29	2.00	5.00	0.84	11.78	2.87	14.88	3.63
K03	18.36	82.00	82.00	0.25	2.76	12.65	3.49	16.02
N05	0.18	1.00	5.00	0.86	11.78	1.86	14.88	2.35
N06	0.28	1.00	5.00	0.85	11.78	2.76	14.88	3.49
N07	0.25	1.00	5.00	0.86	11.78	2.55	14.88	3.22
N08	0.34	1.00	5.00	0.86	11.78	3.41	14.88	4.31
W01	0.18	5.00	5.00	0.40	11.78	0.83	14.88	1.05
CULVERT1	14.24	50.00	50.00	0.31	3.85	16.81	4.85	21.21
CULVERT2	43.52	57.00	57.00	0.34	3.53	52.05	4.46	65.71

NOTES:
1. AREA HYDROLOGY WAS CALCULATED IN GEOPAK DRAINAGE USING THE RATIONAL METHOD.
2. LATEST TXDOT HYDRAULIC MANUAL USED AS SOURCE FOR INTENSITIES.

NUMBER	DATE	REVISION	APPROVED

STATE OF TEXAS
RILEY W. SLADEK
108887
LICENSED
PROFESSIONAL ENGINEER
10/4/2016

LJA Engineering, Inc.
FRN - F-1386

Binkley & Barfield, Inc
consulting engineers
Texas Registration Number F-257

CEDAR PARK

ANDERSON MILL RD
HYDROLOGIC DATA
AREAS

DESIGN BY: RS
DRAWN BY: CM
CHECKED BY: RS
APPROVED BY: DG
PROJECT NO:
DATE: 10/4/2016

SHEET: 1 OF 1
PAGE: 149

10/4/2016
3:11:49 PM
I:\1841\1402\CADD\SHEETS\NORTH\06-Drainage Details\NAMR*HYDR*DATA*AREA*01.dgn

25 YEAR ON GRADE INLET AND SAG CONFIGURATION DATA

INLET ID	INLET CHAIN	INLET STATION	INLET OFFSET	INLET TYPE	INLET PROFILE TYPE	INLET DISCH (cfs)	INLET CAPAC (cfs)	INLET BYPASS NODE	INLET BYPASS FLOW (cfs)	INLET LONG SLOPE (ft/ft)	INLET LENGTH: (ft)	GUTTER N	GUTTER DEPRESS: (ft)	TC/TG ELEV: (ft)	REQUIRED LENGTH: (ft)	GRATE AREA: (SF)	GRATE PERIM: (ft)	COMP INLET POND DEPTH (ft)	INLET MAX POND DEPTH (ft)	COMPUTED INLET POND WIDTH (ft)	INLET MAX POND WIDTH (ft)
A01	AMRN	104+17.80	-28.90	CI TY1 (10')	On Grade	2.64	2.64	J02	0.00	1.00	10.00	0.016	0.58	1023.52	8.38	n/a	n/a	0.21	0.50	10.39	14.00
A02	AMRN	104+27.45	37.20	COA RCI TY1 (10')	On Grade	3.71	3.70	B02	0.00	1.00	10.00	0.016	0.58	1023.25	10.24	n/a	n/a	0.24	0.50	11.81	14.00
B02	AMRN	107+13.46	26.50	CI TY IIR 10 FT	Sag	3.42	10.57	0.00	0.00	n/a	10.00	0.016	0.33	1022.77	2.54	n/a	n/a	0.24	0.50	11.94	14.00
C06	AMRN	109+90.00	26.50	CI TY IIR 10 FT	On Grade	2.33	2.33	B02	0.00	0.41	10.00	0.016	0.33	1023.78	8.48	n/a	n/a	0.23	0.50	11.73	13.00
C09	AMRN	114+70.00	39.53	CI TY IIR 10 FT	On Grade	3.12	3.00	0.00	0.12	0.56	10.00	0.016	0.33	1023.82	11.98	n/a	n/a	0.22	0.50	14.58	14.00
C10	AMRN	109+90.00	-26.50	CI TY IIR 10 FT	On Grade	1.71	1.71	J02	0.00	0.41	10.00	0.016	0.33	1023.78	7.10	n/a	n/a	0.21	0.50	10.45	13.00
C12	AMRN	116+60.00	-28.13	CI TY IIR 10 FT	On Grade	1.14	1.14	0.00	0.00	0.56	10.00	0.016	0.33	1022.80	6.05	n/a	n/a	0.17	0.50	8.45	13.00
C14	AMRN	115+00.00	-26.67	CI TY IIR 10 FT	On Grade	1.55	1.55	C12	0.00	0.56	10.00	0.016	0.33	1023.70	7.23	n/a	n/a	0.19	0.50	9.49	13.00
D27	AMRN	124+50.00	29.00	CI TY IIR 10 FT	On Grade	1.27	1.20	D24	0.06	2.00	10.00	0.016	0.33	1031.54	12.37	n/a	n/a	0.09	0.50	13.25	14.00
D29	AMRN	126+00.00	29.00	CI TY IIR 10 FT	On Grade	1.70	1.70	D27	0.00	2.00	10.00	0.016	0.33	1034.16	10.13	n/a	n/a	0.15	0.50	7.74	13.00
D31	AMRN	128+00.00	29.00	CI TY IIR 10 FT	On Grade	1.74	1.74	D29	0.00	1.90	10.00	0.016	0.33	1038.15	10.17	n/a	n/a	0.16	0.50	7.89	13.00
D33	AMRN	130+00.00	30.99	CI TY IIR 10 FT	On Grade	1.91	1.91	D31	0.00	0.91	10.00	0.016	0.33	1040.93	9.09	n/a	n/a	0.19	0.50	9.37	13.00
D35	AMRN	132+00.00	34.99	CI TY IIR 10 FT	On Grade	1.97	1.97	D33	0.00	0.52	10.00	0.016	0.33	1042.04	8.13	n/a	n/a	0.21	0.50	10.52	13.00
D37	AMRN	134+00.00	35.00	CI TY IIR 10 FT	On Grade	1.92	1.92	D35	0.00	0.52	10.00	0.016	0.33	1043.08	8.03	n/a	n/a	0.21	0.50	10.44	13.00
D39	AMRN	136+00.00	35.00	CI TY IIR 10 FT	On Grade	1.88	1.88	D37	0.00	0.52	10.00	0.016	0.25	1044.12	8.99	n/a	n/a	0.21	0.50	10.36	13.00
E16	AMRN	144+60.00	7.00	CI TY IIR 10 FT	On Grade	2.15	2.12	E14	0.03	1.62	10.00	0.016	0.33	1051.72	11.05	n/a	n/a	0.18	0.50	8.79	13.00
E18	AMRN	147+00.00	7.00	CI TY IIR 10 FT	On Grade	2.47	2.38	E16	0.10	1.62	10.00	0.016	0.33	1055.61	11.97	n/a	n/a	0.19	0.50	9.27	13.00
E20	AMRN	149+50.00	6.50	CI TY1 (10')	On Grade	2.62	2.62	E18	0.00	1.62	10.00	0.016	0.58	1059.57	9.25	n/a	n/a	0.19	0.50	9.47	13.00
E22	AMRN	151+20.00	6.50	CI TY1 (10')	On Grade	3.09	3.09	E20	0.00	1.62	10.00	0.016	0.58	1062.32	10.19	n/a	n/a	0.20	0.50	10.07	13.00
E24	AMRN	155+00.00	6.50	CI TY1 (10')	On Grade	3.34	3.32	E96	0.02	1.62	10.00	0.016	0.58	1068.47	10.67	n/a	n/a	0.21	0.50	10.37	13.00
E26	AMRN	144+60.00	55.00	4 SIDED AREA INLET	Sag	11.08	17.92	0.00	0.00	n/a	n/a	0.016	n/a	1050.00	n/a	6.67	16.00	0.59	1.00	0.00	0.00
E27	AMRN	147+00.00	55.00	4 SIDED AREA INLET	Sag	12.88	17.92	0.00	0.00	n/a	n/a	0.016	n/a	1054.50	n/a	6.67	16.00	0.65	1.00	0.00	0.00
E28	AMRN	151+20.00	55.00	4 SIDED AREA INLET	Sag	16.07	17.92	0.00	0.00	n/a	n/a	0.016	n/a	1062.20	n/a	6.67	16.00	0.80	1.00	0.00	0.00
F08	AMRN	159+70.00	6.50	CI TY1 (10')	On Grade	1.24	1.24	F10	0.00	1.69	10.00	0.016	0.58	1071.70	6.01	n/a	n/a	0.14	0.33	7.10	13.00
F09	AMRN	159+70.00	42.00	DI W/GRATE (4'X2')	Sag	4.19	4.01	0.00	0.00	n/a	n/a	0.016	n/a	1071.00	n/a	3.70	2.60	1.03	1.00	0.00	0.00
F12	AMRN	161+90.00	7.00	CI TY IIR 10 FT	On Grade	4.81	3.83	F14	0.98	1.43	10.00	0.016	0.33	1067.09	17.03	n/a	n/a	0.24	0.33	12.17	13.00
F14	AMRN	163+23.34	7.00	CI TY IIR 10 FT	Sag	3.27	5.75	0.00	0.00	n/a	10.00	0.016	0.33	1066.14	7.91	n/a	n/a	0.23	0.33	11.43	13.00
F15	AMRN	163+23.34	41.50	DI W/GRATE (4'X2')	Sag	11.44	9.94	0.00	0.00	n/a	n/a	0.016	n/a	1065.10	n/a	3.70	12.60	1.32	1.00	0.00	0.00
F18	AMRN	167+78.00	-35.00	CI TY1 (10')	On Grade	2.29	2.29	N05	0.00	2.41	10.00	0.016	0.58	1061.26	9.32	n/a	n/a	0.17	0.33	8.36	13.00
F19	AMRN	167+30.00	47.00	CI TY IIR 10 FT	On Grade	2.98	2.61	N08	0.37	2.41	10.00	0.016	0.33	1062.17	14.57	n/a	n/a	0.18	0.33	9.23	13.00
F20	AMRN	166+15.00	41.50	DI W/GRATE (4'X2')	Sag	6.01	4.01	0.00	0.00	n/a	n/a	0.016	n/a	1063.63	n/a	3.70	2.60	1.31	1.00	5.23	0.00
G05	AMRN	175+00.00	47.00	CI TY IIR 10 FT	On Grade	3.47	3.41	G06	0.06	0.50	10.00	0.016	0.33	1054.50	11.16	n/a	n/a	0.26	0.33	13.11	14.00
G06	AMRN	176+34.62	47.00	CI TY IIR 15 FT	Sag	4.54	7.97	0.00	0.00	n/a	15.00	0.016	0.33	1054.13	8.93	n/a	n/a	0.23	0.33	13.63	14.00
G10	AMRN	174+00.00	-47.00	CI TY IIR 10 FT	On Grade	2.08	2.06	G12	0.02	0.50	10.00	0.016	0.33	1055.47	10.89	n/a	n/a	0.17	0.33	16.70	24.00
G12	AMRN	176+34.62	-7.00	CI TY IIR 15 FT	Sag	4.42	7.97	0.00	0.00	n/a	15.00	0.016	0.33	1055.03	11.17	n/a	n/a	0.23	0.33	13.50	14.00
G13	AMRN	176+20.00	-54.00	4 SIDED AREA INLET	Sag	5.07	17.92	0.00	0.00	n/a	n/a	0.016	n/a	1054.00	n/a	6.67	16.00	0.35	1.00	0.00	0.00
G15	AMRN	177+22.90	-108.50	4 SIDED AREA INLET	Sag	4.08	17.92	0.00	0.00	n/a	n/a	0.016	n/a	1058.00	n/a	6.67	16.00	0.30	1.00	0.00	0.00
J02	AMRN	107+13.46	-26.50	CI TY IIR 10 FT	Sag	2.87	10.57	0.00	0.00	n/a	10.00	0.016	0.33	1022.77	2.54	n/a	n/a	0.21	0.50	11.18	14.00
N05	AMRN	169+92.80	-47.00	CI TY IIR 10 FT	On Grade	1.86	1.86	N06	0.00	1.05	10.00	0.016	0.33	1057.28	9.24	n/a	n/a	0.18	0.33	9.03	14.00
N06	AMRN	172+20.90	-47.00	CI TY IIR 10 FT	On Grade	2.76	2.76	G10	0.00	0.50	10.00	0.016	0.33	1055.90	9.81	n/a	n/a	0.24	0.33	12.04	14.00
N07	AMRN	172+20.90	47.00	CI TY IIR 10 FT	On Grade	2.93	2.92	G05	0.00	0.50	10.00	0.016	0.33	1055.90	10.13	n/a	n/a	0.25	0.33	12.30	14.00
N08	AMRN	169+92.80	47.00	CI TY IIR 10 FT	On Grade	3.78	3.40	N07	0.38	1.05	10.00	0.016	0.33	1057.28	13.86	n/a	n/a	0.24	0.33	11.77	14.00
W01	AMRN	120+00.00	68.00	4 SIDED AREA INLET	Sag	0.83	17.92	0.00	0.00	n/a	n/a	0.016	n/a	1019.43	n/a	6.67	16.00	0.10	1.00	0.00	0.00

NOTES:
1. INLET DATA WAS CALCULATED IN GEOPAK DRAINAGE.

NUMBER	DATE	REVISION	APPROVED

STATE OF TEXAS
RILEY W. SLADEK
108887
LICENSED
PROFESSIONAL ENGINEER
10/4/2016

LJA Engineering, Inc.
FRN - F-1386

Binkley & Barfield, Inc
consulting engineers
Texas Registration Number F-257

CEDAR PARK

ANDERSON MILL RD
HYDRAULIC DATA
INLETS

DESIGN BY: RS
DRAWN BY: CM
CHECKED BY: RS
APPROVED BY: DG
PROJECT NO:
DATE: 10/4/2016

SHEET: 1 OF 2

10/4/2016
3:11:51 PM
I:\1841\1402\CADD\SHEETS\NORTH\06-Drainage Details\NAMR*HYDR*DATA*INLETS*01.dgn

100 YEAR ON GRADE INLET AND SAG CONFIGURATION DATA

INLET ID	INLET CHAIN	INLET STATION	INLET OFFSET	INLET TYPE	INLET PROFILE TYPE	INLET DISCH (cfs)	INLET CAPAC (cfs)	INLET BYPASS NODE	INLET BYPASS FLOW (cfs)	INLET LONG SLOPE (ft/ft)	INLET LENGTH: (ft)	GUTTER N	GUTTER DEPRESS: (ft)	TC/TG ELEV: (ft)	REQUIRED LENGTH: (ft)	GRATE AREA: (SF)	GRATE PERIM: (ft)	COMP INLET POND DEPTH (ft)	INLET MAX POND DEPTH (ft)	COMPUTED INLET POND WIDTH (ft)	INLET MAX POND WIDTH (ft)
A01	AMRN	104+17.80	-28.90	CI TY1 (10')	On Grade	3.33	3.33	J02	0.00	1.00	10.00	0.016	0.58	1023.52	9.62	n/a	n/a	0.23	0.50	11.34	14.00
A02	AMRN	104+27.45	37.20	COA RCI TY1 (10')	On Grade	4.68	4.53	B02	0.15	1.00	10.00	0.016	0.58	1023.25	11.75	n/a	n/a	0.26	0.50	12.88	14.00
B02	AMRN	107+13.46	26.50	CI TY IIR 10 FT	Sag	4.47	10.57	0.00	0.00	n/a	10.00	0.016	0.33	1022.77	2.54	n/a	n/a	0.28	0.50	14.08	14.00
C06	AMRN	109+90.00	26.50	CI TY IIR 10 FT	On Grade	2.94	2.94	B02	0.00	0.41	10.00	0.016	0.33	1023.78	9.69	n/a	n/a	0.26	0.50	12.81	13.00
C09	AMRN	114+70.00	39.53	CI TY IIR 10 FT	On Grade	3.94	3.57	0.00	0.37	0.56	10.00	0.016	0.33	1023.82	13.71	n/a	n/a	0.24	0.50	15.92	14.00
C10	AMRN	109+90.00	-26.50	CI TY IIR 10 FT	On Grade	2.16	2.16	J02	0.00	0.41	10.00	0.016	0.33	1023.78	8.12	n/a	n/a	0.23	0.50	11.40	13.00
C12	AMRN	116+60.00	-28.13	CI TY IIR 10 FT	On Grade	1.44	1.44	0.00	0.00	0.56	10.00	0.016	0.33	1022.80	6.92	n/a	n/a	0.18	0.50	9.23	13.00
C14	AMRN	115+00.00	-26.67	CI TY IIR 10 FT	On Grade	1.96	1.96	C12	0.00	0.56	10.00	0.016	0.33	1023.70	8.26	n/a	n/a	0.21	0.50	10.36	13.00
D27	AMRN	124+50.00	29.00	CI TY IIR 10 FT	On Grade	1.67	1.46	D24	0.21	2.00	10.00	0.016	0.33	1031.54	14.61	n/a	n/a	0.10	0.50	14.71	14.00
D29	AMRN	126+00.00	29.00	CI TY IIR 10 FT	On Grade	2.21	2.14	D27	0.07	2.00	10.00	0.016	0.33	1034.16	11.77	n/a	n/a	0.17	0.50	8.54	13.00
D31	AMRN	128+00.00	29.00	CI TY IIR 10 FT	On Grade	2.21	2.14	D29	0.06	1.90	10.00	0.016	0.33	1038.15	11.64	n/a	n/a	0.17	0.50	8.62	13.00
D33	AMRN	130+00.00	30.99	CI TY IIR 10 FT	On Grade	2.41	2.41	D31	0.01	0.91	10.00	0.016	0.33	1040.93	10.39	n/a	n/a	0.20	0.50	10.22	13.00
D35	AMRN	132+00.00	34.99	CI TY IIR 10 FT	On Grade	2.48	2.48	D33	0.00	0.52	10.00	0.016	0.33	1042.04	9.29	n/a	n/a	0.23	0.50	11.49	13.00
D37	AMRN	134+00.00	35.00	CI TY IIR 10 FT	On Grade	2.43	2.43	D35	0.00	0.52	10.00	0.016	0.33	1043.08	9.18	n/a	n/a	0.23	0.50	11.40	13.00
D39	AMRN	136+00.00	35.00	CI TY IIR 10 FT	On Grade	2.38	2.37	D37	0.00	0.52	10.00	0.016	0.25	1044.12	10.26	n/a	n/a	0.23	0.50	11.30	13.00
E16	AMRN	144+60.00	7.00	CI TY IIR 10 FT	On Grade	2.90	2.68	E14	0.22	1.62	10.00	0.016	0.33	1051.72	13.11	n/a	n/a	0.20	0.50	9.84	13.00
E18	AMRN	147+00.00	7.00	CI TY IIR 10 FT	On Grade	3.16	2.85	E16	0.31	1.62	10.00	0.016	0.33	1055.61	13.77	n/a	n/a	0.20	0.50	10.16	13.00
E20	AMRN	149+50.00	6.50	CI TY1 (10')	On Grade	3.43	3.39	E18	0.03	1.62	10.00	0.016	0.58	1059.57	10.84	n/a	n/a	0.21	0.50	10.47	13.00
E22	AMRN	151+20.00	6.50	CI TY1 (10')	On Grade	3.90	3.78	E20	0.12	1.62	10.00	0.016	0.58	1062.32	11.70	n/a	n/a	0.22	0.50	10.99	13.00
E24	AMRN	155+00.00	6.50	CI TY1 (10')	On Grade	4.22	4.02	E96	0.20	1.62	10.00	0.016	0.58	1068.47	12.25	n/a	n/a	0.23	0.50	11.32	13.00
E26	AMRN	144+60.00	55.00	4 SIDED AREA INLET	Sag	13.97	17.92	0.00	0.00	n/a	n/a	0.016	n/a	1050.00	n/a	6.67	16.00	0.68	1.00	0.00	0.00
E27	AMRN	147+00.00	55.00	4 SIDED AREA INLET	Sag	16.22	17.92	0.00	0.00	n/a	n/a	0.016	n/a	1054.50	n/a	6.67	16.00	0.82	1.00	0.00	0.00
E28	AMRN	151+20.00	55.00	4 SIDED AREA INLET	Sag	20.22	17.92	0.00	0.00	n/a	n/a	0.016	n/a	1062.20	n/a	6.67	16.00	1.27	1.00	0.00	0.00
F08	AMRN	159+70.00	6.50	CI TY1 (10')	On Grade	1.56	1.56	F10	0.00	1.69	10.00	0.016	0.58	1071.70	6.89	n/a	n/a	0.15	0.33	7.74	13.00
F09	AMRN	159+70.00	42.00	DI W/GRATE (4'X2')	Sag	5.29	4.01	0.00	0.00	n/a	n/a	0.016	n/a	1071.00	n/a	3.70	2.60	1.20	1.00	0.00	0.00
F12	AMRN	161+90.00	7.00	CI TY IIR 10 FT	On Grade	6.08	4.42	F14	1.66	1.43	10.00	0.016	0.33	1067.09	19.46	n/a	n/a	0.27	0.33	13.29	13.00
F14	AMRN	163+23.34	7.00	CI TY IIR 10 FT	Sag	4.55	5.75	0.00	0.00	n/a	10.00	0.016	0.33	1066.14	7.91	n/a	n/a	0.29	0.33	14.25	13.00
F15	AMRN	163+23.34	41.50	DI W/GRATE (4'X2')	Sag	14.38	9.94	0.00	0.00	n/a	n/a	0.016	n/a	1065.10	n/a	3.70	12.60	2.09	1.00	0.00	0.00
F18	AMRN	167+78.00	-35.00	CI TY1 (10')	On Grade	2.90	2.87	N05	0.02	2.41	10.00	0.016	0.58	1061.26	10.69	n/a	n/a	0.18	0.33	9.13	13.00
F19	AMRN	167+30.00	47.00	CI TY IIR 10 FT	On Grade	3.77	3.05	N08	0.72	2.41	10.00	0.016	0.33	1062.17	16.65	n/a	n/a	0.20	0.33	10.07	13.00
F20	AMRN	166+15.00	41.50	DI W/GRATE (4'X2')	Sag	7.58	4.01	0.00	0.00	n/a	n/a	0.016	n/a	1063.63	n/a	3.70	2.60	1.53	1.00	6.11	0.00
G05	AMRN	175+00.00	47.00	CI TY IIR 10 FT	On Grade	4.59	4.25	G06	0.34	0.50	10.00	0.016	0.33	1054.50	13.08	n/a	n/a	0.29	0.33	14.55	14.00
G06	AMRN	176+34.62	47.00	CI TY IIR 15 FT	Sag	6.00	7.97	0.00	0.00	n/a	15.00	0.016	0.33	1054.13	8.93	n/a	n/a	0.28	0.33	15.13	14.00
G10	AMRN	174+00.00	-47.00	CI TY IIR 10 FT	On Grade	2.69	2.53	G12	0.16	0.50	10.00	0.016	0.33	1055.47	12.68	n/a	n/a	0.18	0.33	18.40	24.00
G12	AMRN	176+34.62	-7.00	CI TY IIR 15 FT	Sag	5.72	7.97	0.00	0.00	n/a	15.00	0.016	0.33	1055.03	11.17	n/a	n/a	0.27	0.33	14.87	14.00
G13	AMRN	176+20.00	-54.00	4 SIDED AREA INLET	Sag	6.37	17.92	0.00	0.00	n/a	n/a	0.016	n/a	1054.00	n/a	6.67	16.00	0.41	1.00	0.00	0.00
G15	AMRN	177+22.90	-108.50	4 SIDED AREA INLET	Sag	5.14	17.92	0.00	0.00	n/a	n/a	0.016	n/a	1058.00	n/a	6.67	16.00	0.35	1.00	0.00	0.00
J02	AMRN	107+13.46	-26.50	CI TY IIR 10 FT	Sag	3.63	10.57	0.00	0.00	n/a	10.00	0.016	0.33	1022.77	2.54	n/a	n/a	0.25	0.50	12.25	14.00
N05	AMRN	169+92.80	-47.00	CI TY IIR 10 FT	On Grade	2.37	2.36	N06	0.01	1.05	10.00	0.016	0.33	1057.28	10.61	n/a	n/a	0.20	0.33	9.88	14.00
N06	AMRN	172+20.90	-47.00	CI TY IIR 10 FT	On Grade	3.51	3.44	G10	0.07	0.50	10.00	0.016	0.33	1055.90	11.23	n/a	n/a	0.26	0.33	13.16	14.00
N07	AMRN	172+20.90	47.00	CI TY IIR 10 FT	On Grade	4.13	3.92	G05	0.20	0.50	10.00	0.016	0.33	1055.90	12.32	n/a	n/a	0.28	0.33	13.99	14.00
N08	AMRN	169+92.80	47.00	CI TY IIR 10 FT	On Grade	5.03	4.12	N07	0.91	1.05	10.00	0.016	0.33	1057.28	16.31	n/a	n/a	0.26	0.33	13.10	14.00
W01	AMRN	120+00.00	68.00	4 SIDED AREA INLET	Sag	1.05	17.92	0.00	0.00	n/a	n/a	0.016	n/a	1019.43	n/a	6.67	16.00	0.12	1.00	0.00	0.00

NOTES:
1. INLET DATA WAS CALCULATED IN GEOPAK DRAINAGE.

NUMBER	DATE	REVISION	APPROVED

STATE OF TEXAS
RILEY W. SLADEK
108887
LICENSED
PROFESSIONAL ENGINEER
10/4/2016

LJA Engineering, Inc.
FRN - F-1386

Binkley & Barfield, Inc
consulting engineers
Texas Registration Number F-257

CEDAR PARK

ANDERSON MILL RD
HYDRAULIC DATA
INLETS

DESIGN BY: RS
DRAWN BY: CM
CHECKED BY: RS
APPROVED BY: DG
PROJECT NO:
DATE: 10/4/2016

SHEET: 2 OF 2
PAGE: 151

10/4/2016
3:11:53 PM
i:\1841\1402\CADD\SHEETS\NORTH\06-Drainage Details\NAMR*HYDR*DATA*INLETS*02.dgn

25 YEAR - CONVEYANCE CONFIGURATION DATA

PIPE ID	STRUCTURE ID	STRUCTURE TYPE	LOCATION CHAIN/STATION/OFFSET			CUML AREA (acre)	CUML C	Tc USED ACTUAL Tc (min)	RAIN INT (in/hr)	TOTAL Q (cfs)	FLOW VEL V full / V actual (ft/s)	FLOW DEPTH (ft)	FULL PIPE CAP. (cfs)	ACTUAL PIPE LENGTH (ft)	HYD PIPE LENGTH (ft)	SLOPE (%)	PIPE SHAPE	PIPE SIZE	PIPE MATL	PIPE #	PIPE SPAN (FT)	PIPE RISE (FT)	N VALUE	PIPE INVERT ELEVATION UPPER END	PIPE INVERT ELEVATION LOWER END	FALL (ft)	FR SLOPE (%)	TOP OF GRATE/MH HGL ELEVATION UPPER END	TOP OF GRATE/MH HGL ELEVATION LOWER END
B01	B01	Junction	CHAIN	AMRN		0.35	0.84	5.00	11.78	3.42	2.18	1.00	4.55	236.47	236.47	0.30	Circ	12"	Conc	2	n/a	1.00	0.012	1019.72	1019.01	0.71	0.31	1022.44	1022.89
	BOUT	Outlet	FROM	107+08.96	18.00																								
			TO	104+75.80	28.00			2.06			2.18																	1020.44	1020.01
B02	B02	Curb	CHAIN	AMRN		0.35	0.84	5.00	11.78	3.42	2.18	0.72	4.55	6.36	10.36	0.30	Circ	12"	Conc	2	n/a	1.00	0.012	1019.75	1019.72	0.03	0.31	1022.77	1022.44
	B01	Junction	FROM	107+13.46	26.50																								
			TO	107+08.96	18.00			2.00			2.84																	1020.59	1020.44
C01	C01	Junction	CHAIN	AMRN		0.94	0.89	5.03	11.76	9.83	5.56	1.21	6.70	140.49	140.49	0.30	Circ	18"	Conc	1	n/a	1.50	0.012	1016.67	1016.25	0.42	0.64	1022.86	1023.57
	COUT	Outlet	FROM	118+51.21	19.50																								
			TO	119+87.16	19.50			5.56			6.44																	1018.64	1017.46
C02	C02	Junction	CHAIN	AMRN		0.94	0.89	5.03	11.76	9.82	5.56	1.50	6.70	179.75	179.75	0.30	Circ	18"	Conc	1	n/a	1.50	0.012	1017.21	1016.67	0.54	0.64	1023.36	1022.86
	C01	Junction	FROM	116+74.78	29.07																								
			TO	118+51.21	19.50			5.03			5.56																	1019.98	1018.64
C03	C03	Junction	CHAIN	AMRN		0.70	0.87	5.00	11.78	7.15	4.05	1.50	6.70	81.36	81.36	0.30	Circ	18"	Conc	1	n/a	1.50	0.012	1017.80	1017.56	0.24	0.34	1023.62	1023.43
	C13	Junction	FROM	114+75.53	29.50																								
			TO	115+57.38	30.28			4.32			4.05																	1020.99	1020.67
C04	C04	Junction	CHAIN	AMRN		0.40	0.85	5.00	11.78	4.03	2.28	1.50	6.70	446.61	446.61	0.30	Circ	18"	Conc	1	n/a	1.50	0.012	1019.14	1017.80	1.34	0.30	1023.63	1023.62
	C03	Junction	FROM	110+28.50	17.00																								
			TO	114+75.53	29.50			2.33			2.28																	1021.55	1020.99
C05	C05	Junction	CHAIN	AMRN		0.23	0.86	5.00	11.78	2.33	1.32	1.50	6.70	33.00	33.00	0.30	Circ	18"	Conc	1	n/a	1.50	0.012	1019.24	1019.14	0.10	0.29	1023.49	1023.63
	C04	Junction	FROM	109+95.50	17.00																								
			TO	110+28.50	17.00			2.06			1.32																	1021.56	1021.55
C06	C06	Curb	CHAIN	AMRN		0.23	0.86	5.00	11.78	2.33	1.32	1.50	6.70	7.78	11.78	0.30	Circ	18"	Conc	1	n/a	1.50	0.012	1019.28	1019.24	0.04	0.29	1023.78	1023.49
	C05	Junction	FROM	109+90.00	26.50																								
			TO	109+95.50	17.00			2.00			1.32																	1021.57	1021.56
C07	C07	Junction	CHAIN	AMRN		0.00	0.00	0.00	0.00	0.00	0.00	1.50	24.48	20.82	22.32	4.00	Circ	18"	Conc	1	n/a	1.50	0.012	1017.56	1016.67	0.89	4.00	1022.27	1022.86
	C01	Junction	FROM	118+37.49	2.60																								
			TO	118+51.21	19.50			5.03			0.00																	1018.64	1018.64
C08	C08	Junction	CHAIN	AMRN		0.10	0.95	5.00	11.78	1.14	0.64	1.50	24.48	23.41	24.91	4.00	Circ	18"	Conc	1	n/a	1.50	0.012	1018.21	1017.21	1.00	3.99	1023.08	1023.36
	C02	Junction	FROM	116+60.00	9.38																								
			TO	116+74.78	29.07			2.19			0.64																	1019.99	1019.98
C09	C09	Curb	CHAIN	AMRN		0.30	0.89	5.00	11.78	3.12	1.77	1.50	26.94	8.16	12.16	4.84	Circ	18"	Conc	1	n/a	1.50	0.012	1018.39	1017.80	0.59	4.84	1023.82	1023.62
	C03	Junction	FROM	114+70.00	39.53																								
			TO	114+75.53	29.50			2.33			1.77																	1021.00	1020.99
C10	C10	Curb	CHAIN	AMRN		0.17	0.84	5.00	11.78	1.71	0.97	1.50	6.70	55.16	59.16	0.30	Circ	18"	Conc	1	n/a	1.50	0.012	1019.32	1019.14	0.18	0.29	1023.78	1023.63
	C04	Junction	FROM	109+90.00	-26.50																								
			TO	110+28.50	17.00			2.06			0.97																	1021.56	1021.55
C11	C11	Junction	CHAIN	AMRN		0.00	0.00	0.00	0.00	0.00	0.00	1.08	17.35	6.10	7.60	2.01	Circ	18"	Conc	1	n/a	1.50	0.012	1017.72	1017.56	0.15	2.01	1022.93	1022.27
	C07	Junction	FROM	118+37.49	-5.00																								
			TO	118+37.49	2.60			0.00			0.00																	1018.64	1018.64
C12	C12	Curb	CHAIN	AMRN		0.10	0.95	5.00	11.78	1.14	0.64	1.50	8.79	32.01	37.51	0.52	Circ	18"	Conc	1	n/a	1.50	0.012	1018.40	1018.21	0.19	0.51	1022.80	1023.08
	C08	Junction	FROM	116+60.00	-28.13																								
			TO	116+60.00	9.38			2.00			0.64																	1019.99	1019.99
C13	C13	Junction	CHAIN	AMRN		0.84	0.88	5.00	11.78	8.70	4.93	1.50	6.70	116.71	116.71	0.30	Circ	18"	Conc	1	n/a	1.50	0.012	1017.56	1017.21	0.35	0.51	1023.43	1023.36
	C02	Junction	FROM	115+57.38	30.28																								
			TO	116+74.78	29.07			2.19			4.93																	1020.67	1019.98
C14	C14	Curb	CHAIN	AMRN		0.14	0.93	5.00	11.78	1.55	0.88	1.50	15.08	78.03	82.03	1.52	Circ	18"	Conc	1	n/a	1.50	0.012	1018.81	1017.56	1.24	1.52	1023.70	1023.43
	C13	Junction	FROM	115+00.00	-26.67																								
			TO	115+57.38	30.28			4.32			0.88																	1020.68	1020.67
D01	D01	Junction	CHAIN	AMRN		1.26	0.83	18.61	6.93	7.30	1.49	0.53	82.79	96.21	96.21	3.00	Circ	30"	Conc	1	n/a	2.50	0.012	1018.89	1016.00	2.89	3.00	1026.71	1021.67
	DOUT	Outlet	FROM	121+35.00	19.50																								
			TO	120+87.00	99.69			19.20			9.71																	1019.78	1016.53
D02	D02	Junction	CHAIN	AMRN		1.26	0.83	18.61	6.93	7.30	1.49	0.54	83.40	53.01	53.01	3.04	Circ	30"	Conc	1	n/a	2.50	0.012	1020.50	1018.89	1.61	3.05	1026.71	1026.71
	D01	Junction	FROM	121+86.18	19.50																								
			TO	121+35.00	19.50			19.11			9.31																	1021.40	1019.43

NOTES:
1. LINK DATA WAS CALCULATED IN GEOPAK DRAINAGE.

NUMBER	DATE	REVISION	APPROVED

STATE OF TEXAS
RILEY W. SLADEK
108887
LICENSED PROFESSIONAL ENGINEER
10/4/2016

LJA Engineering, Inc.
FRN - F-1386

Binkley & Barfield, Inc
consulting engineers
Texas Registration Number F-257

CEDAR PARK

ANDERSON MILL RD
HYDRAULIC DATA
LINKS

DESIGN BY: RS
DRAWN BY: CM
CHECKED BY: RS
APPROVED BY: DG
PROJECT NO:
DATE: 10/4/2016

SHEET: 1 OF 16
PAGE: 152

10/4/2016
3:11:56 PM
I:\1841\1402\CADD\SHEETS\NORTH\06-Drainage Details\NAMR*HYDR*DATA*LINKS25*01.dgn

25 YEAR - CONVEYANCE CONFIGURATION DATA

PIPE ID	STRUCTURE ID	STRUCTURE TYPE	LOCATION CHAIN/STATION/OFFSET			CUML AREA (acre)	CUML C	Tc USED ACTUAL Tc (min)	RAIN INT (in/hr)	TOTAL Q (cfs)	FLOW VEL V full / V actual (ft/s)	FLOW DEPTH (ft)	FULL PIPE CAP. (cfs)	ACTUAL PIPE LENGTH (ft)	HYD PIPE LENGTH (ft)	SLOPE (%)	PIPE SHAPE	PIPE SIZE	PIPE MATL	PIPE #	PIPE SPAN (FT)	PIPE RISE (FT)	N VALUE	PIPE INVERT ELEVATION UPPER END	PIPE INVERT ELEVATION LOWER END	FALL (ft)	FR SLOPE (%)	TOP OF GRATE/MH HGL ELEVATION UPPER END	TOP OF GRATE/MH HGL ELEVATION LOWER END
D03	D03	Junction	CHAIN	AMRN		1.26	0.83	18.61	6.93	7.30	1.49	0.57	69.63	221.90	221.90	2.12	Circ	30"	Conc	1	n/a	2.50	0.012	1025.21	1020.50	4.71	2.11	1030.40	1026.71
	D02	Junction	FROM	124+05.50	19.50			18.68			8.71																	1026.11	1021.07
			TO	121+86.18	19.50																								
D04	D04	Junction	CHAIN	AMRN		1.26	0.83	18.61	6.93	7.29	1.49	0.61	67.21	39.00	39.00	1.98	Circ	30"	Conc	1	n/a	2.50	0.012	1025.98	1025.21	0.77	1.98	1031.01	1030.40
	D03	Junction	FROM	124+44.50	19.50			18.61			7.78																	1026.88	1025.82
			TO	124+05.50	19.50																								
D05	D05	Junction	CHAIN.	AMRN		1.14	0.83	18.29	6.99	6.61	1.35	0.57	63.87	111.00	111.00	1.79	Circ	30"	Conc	1	n/a	2.50	0.012	1027.96	1025.98	1.98	1.78	1032.96	1031.01
	D04	Junction	FROM	125+55.50	19.50			18.37			7.90																	1028.81	1026.55
			TO	124+44.50	19.50																								
D06	D06	Junction	CHAIN	AMRN		1.14	0.83	18.29	6.99	6.61	1.35	0.60	62.69	39.00	39.00	1.72	Circ	30"	Conc	1	n/a	2.50	0.012	1028.63	1027.96	0.67	1.72	1033.74	1032.96
	D05	Junction	FROM	125+94.50	19.50			18.29			7.28																	1029.48	1028.56
			TO	125+55.50	19.50																								
D07	D07	Junction	CHAIN	AMRN		0.97	0.83	17.86	7.08	5.67	1.15	0.49	71.31	161.00	161.00	2.23	Circ	30"	Conc	1	n/a	2.50	0.012	1032.22	1028.63	3.58	2.23	1036.96	1033.74
	D06	Junction	FROM	127+55.50	19.50			17.97			8.23																	1033.00	1029.13
			TO	125+94.50	19.50																								
D08	D08	Junction	CHAIN	AMRN		0.97	0.83	17.86	7.08	5.67	1.15	0.61	48.86	39.00	39.00	1.04	Circ	30"	Conc	1	n/a	2.50	0.012	1032.62	1032.22	0.41	1.05	1037.74	1036.96
	D07	Junction	FROM	127+94.50	19.50			17.86			6.04																	1033.41	1032.83
			TO	127+55.50	19.50																								
D09	D09	Junction	CHAIN	AMRN		0.79	0.82	17.34	7.18	4.69	0.96	0.49	60.52	156.15	156.15	1.60	Circ	30"	Conc	1	n/a	2.50	0.012	1035.13	1032.62	2.50	1.60	1040.13	1037.74
	D08	Junction	FROM	129+50.64	20.50			17.49			6.94																	1035.84	1033.11
			TO	127+94.50	19.50																								
D10	D10	Junction	CHAIN	AMRN		0.79	0.82	17.34	7.18	4.69	0.96	0.62	37.55	44.06	44.06	0.62	Circ	30"	Conc	1	n/a	2.50	0.012	1035.40	1035.13	0.27	0.62	1040.57	1040.13
	D09	Junction	FROM	129+94.69	21.39			17.34			4.91																	1036.11	1035.75
			TO	129+50.64	20.50																								
D11	D11	Junction	CHAIN	AMRN		0.59	0.83	16.57	7.35	3.61	0.74	0.54	38.28	147.82	147.82	0.64	Circ	30"	Conc	1	n/a	2.50	0.012	1036.35	1035.40	0.95	0.65	1041.46	1040.57
	D10	Junction	FROM	131+42.49	24.34			16.81			4.67																	1036.97	1035.93
			TO	129+94.69	21.39																								
D12	D12	Junction	CHAIN	AMRN		0.59	0.83	16.57	7.35	3.61	0.73	0.62	26.18	52.22	52.22	0.30	Circ	30"	Conc	1	n/a	2.50	0.012	1036.50	1036.35	0.16	0.30	1041.71	1041.46
	D11	Junction	FROM	131+94.69	25.39			16.57			3.77																	1037.15	1036.97
			TO	131+42.49	24.34																								
D13	D13	Junction	CHAIN	AMRN		0.39	0.84	15.71	7.55	2.44	0.50	0.46	35.89	173.35	173.35	0.56	Circ	30"	Conc	1	n/a	2.50	0.012	1037.48	1036.50	0.98	0.56	1042.62	1041.71
	D12	Junction	FROM	133+70.45	25.50			15.84			3.96																	1037.99	1036.96
			TO	131+94.69	25.39																								
D14	D14	Junction	CHAIN	AMRN		0.39	0.84	15.71	7.55	2.44	0.50	0.51	25.71	21.43	23.93	0.29	Circ	30"	Conc	1	n/a	2.50	0.012	1037.55	1037.48	0.07	0.29	1042.74	1042.62
	D13	Junction	FROM	133+94.33	25.50			15.71			3.39																	1038.09	1037.99
			TO	133+70.45	25.50																								
D15	D15	Junction	CHAIN	AMRN		0.19	0.86	5.00	11.78	1.89	0.60	0.43	19.84	168.29	170.79	0.57	Circ	24"	Conc	1	n/a	2.00	0.012	1039.02	1038.05	0.97	0.56	1043.65	1042.74
	D14	Junction	FROM	135+70.45	25.50			14.96			3.77																	1039.49	1038.48
			TO	133+94.33	25.50																								
D16	D16	Junction	CHAIN	AMRN		0.19	0.86	5.00	11.78	1.89	0.60	0.48	14.44	23.08	23.08	0.30	Circ	24"	Conc	1	n/a	2.00	0.012	1039.09	1039.02	0.07	0.30	1043.78	1043.65
	D15	Junction	FROM	135+94.33	25.50			14.83			3.29																	1039.59	1039.49
			TO	135+70.45	25.50																								
D17	D17	Junction	CHAIN	AMRN		0.00	0.00	0.00	0.00	0.00	0.00	0.02	19.95	137.69	139.69	0.57	Circ	24"	Conc	1	n/a	2.00	0.012	1039.89	1039.09	0.80	0.57	1044.53	1043.78
	D16	Junction	FROM	137+39.04	25.50			10.86			0.59																	1040.01	1039.11
			TO	135+94.33	25.50																								
D18	D18	Junction	CHAIN	AMRN		0.00	0.00	0.00	0.00	0.00	0.00	0.02	8.26	51.43	53.43	0.45	Circ	18"	Conc	1	n/a	1.50	0.012	1040.63	1040.39	0.24	0.45	1044.81	1044.53
	D17	Junction	FROM	137+94.33	25.50			9.14			0.52																	1040.72	1040.41
			TO	137+39.04	25.50																								
D19	D19	Junction	CHAIN	AMRN		0.00	0.00	0.00	0.00	0.00	0.00	0.02	9.15	146.93	146.93	0.56	Circ	18"	Conc	1	n/a	1.50	0.012	1041.45	1040.63	0.82	0.56	1045.59	1044.81
	D18	Junction	FROM	139+43.50	25.50			4.17			0.49																	1041.54	1040.65
			TO	137+94.33	25.50																								
D20	D20	Junction	CHAIN	AMRN		0.00	0.00	0.00	0.00	0.00	0.00	0.01	10.86	51.00	51.00	0.79	Circ	18"	Conc	1	n/a	1.50	0.012	1041.85	1041.45	0.40	0.78	1045.85	1045.59
	D19	Junction	FROM	139+94.50	25.50			0.00			0.45																	1041.98	1041.46
			TO	139+43.50	25.50																								

NOTES:
1. LINK DATA WAS CALCULATED IN GEOPAK DRAINAGE.

NUMBER	DATE	REVISION	APPROVED

STATE OF TEXAS
RILEY W. SLADEK
108887
LICENSED PROFESSIONAL ENGINEER
10/4/2016

LJA Engineering, Inc.
FRN - F-1386

Binkley & Barfield, Inc
consulting engineers
Texas Registration Number F-257

CEDAR PARK

ANDERSON MILL RD
HYDRAULIC DATA
LINKS

DESIGN BY: RS
DRAWN BY: CM
CHECKED BY: RS
APPROVED BY: DG
PROJECT NO:
DATE: 10/4/2016

SHEET: 2 OF 16
PAGE: 153

10/4/2016
3:11:59 PM
I:\1841\1402\CADD\SHEETS\NORTH\06-Drainage Details\NAMR*HYDR*DATA*LINKS25*02.dgn

25 YEAR - CONVEYANCE CONFIGURATION DATA

PIPE ID	STRUCTURE ID	STRUCTURE TYPE	LOCATION CHAIN/STATION/OFFSET			CUML AREA (acre)	CUML C	Tc USED ACTUAL Tc (min)	RAIN INT (in/hr)	TOTAL Q (cfs)	FLOW VEL V full / V actual (ft/s)	FLOW DEPTH (ft)	FULL PIPE CAP. (cfs)	ACTUAL PIPE LENGTH (ft)	HYD PIPE LENGTH (ft)	SLOPE (%)	PIPE SHAPE	PIPE SIZE	PIPE MATL	PIPE #	PIPE SPAN (FT)	PIPE RISE (FT)	N VALUE	PIPE INVERT ELEVATION UPPER END	PIPE INVERT ELEVATION LOWER END	FALL (ft)	FR SLOPE (%)	TOP OF GRATE/MH HGL ELEVATION UPPER END	TOP OF GRATE/MH HGL ELEVATION LOWER END
D24	D24	Junction	CHAIN	AMRN		0.00	0.00	0.00	0.00	0.00	0.00	0.03	6.70	20.97	22.47	0.30	Circ	18"	Conc	1	n/a	1.50	0.012	1021.57	1021.50	0.07	0.30	1026.34	1026.71
	D02	Junction	FROM	122+00.00	2.50			18.68			0.26																	1021.66	1021.53
			TO	121+86.18	19.50																								
D26	D26	Junction	CHAIN	AMRN		0.00	0.00	0.00	0.00	0.00	0.00	0.02	6.70	34.63	34.63	0.30	Circ	18"	Conc	1	n/a	1.50	0.012	1026.31	1026.21	0.10	0.30	1030.74	1030.40
	D03	Junction	FROM	124+29.98	-5.00			18.61			0.32																	1026.44	1026.22
			TO	124+05.50	19.50																								
D27	D27	Curb	CHAIN	AMRN		0.13	0.86	5.00	11.78	1.27	0.72	0.42	6.70	7.78	11.78	0.30	Circ	18"	Conc	1	n/a	1.50	0.012	1027.01	1026.98	0.04	0.29	1031.54	1031.01
	D04	Junction	FROM	124+50.00	29.00			18.37			3.14																	1027.56	1027.40
			TO	124+44.50	19.50																								
D28	D28	Junction	CHAIN	AMRN		0.00	0.00	0.00	0.00	0.00	0.00	0.02	6.70	34.66	34.66	0.30	Circ	18"	Conc	1	n/a	1.50	0.012	1029.07	1028.96	0.10	0.30	1033.74	1032.96
	D05	Junction	FROM	125+80.02	-5.00			18.29			0.32																	1029.20	1028.98
			TO	125+55.50	19.50																								
D29	D29	Curb	CHAIN	AMRN		0.17	0.86	5.00	11.78	1.70	0.96	0.49	6.70	7.78	11.78	0.30	Circ	18"	Conc	1	n/a	1.50	0.012	1029.67	1029.63	0.04	0.29	1034.16	1033.74
	D06	Junction	FROM	126+00.00	29.00			17.97			3.40																	1030.33	1030.12
			TO	125+94.50	19.50																								
D30	D30	Junction	CHAIN	AMRN		0.00	0.00	0.00	0.00	0.00	0.00	0.02	6.70	34.65	34.65	0.30	Circ	18"	Conc	1	n/a	1.50	0.012	1033.32	1033.22	0.10	0.30	1037.74	1036.96
	D07	Junction	FROM	127+80.00	-5.00			17.86			0.32																	1033.45	1033.23
			TO	127+55.50	19.50																								
D31	D31	Curb	CHAIN	AMRN		0.18	0.84	5.00	11.78	1.74	0.99	0.50	6.70	7.78	11.78	0.30	Circ	18"	Conc	1	n/a	1.50	0.012	1033.66	1033.62	0.04	0.31	1038.15	1037.74
	D08	Junction	FROM	128+00.00	29.00			17.49			3.40																	1034.33	1034.12
			TO	127+94.50	19.50																								
D32	D32	Junction	CHAIN	AMRN		0.00	0.00	0.00	0.00	0.00	0.00	0.02	6.70	36.80	36.80	0.30	Circ	18"	Conc	1	n/a	1.50	0.012	1036.24	1036.13	0.11	0.30	1040.73	1040.13
	D09	Junction	FROM	129+77.17	-5.00			17.34			0.32																	1036.37	1036.14
			TO	129+50.64	20.50																								
D33	D33	Curb	CHAIN	AMRN		0.20	0.80	5.00	11.78	1.91	1.08	0.52	6.70	7.72	11.72	0.30	Circ	18"	Conc	1	n/a	1.50	0.012	1036.43	1036.40	0.04	0.30	1040.93	1040.57
	D10	Junction	FROM	130+00.00	30.99			16.81			3.50																	1037.15	1036.92
			TO	129+94.69	21.39																								
D34	D34	Junction	CHAIN	AMRN		0.00	0.00	0.00	0.00	0.00	0.00	0.02	6.70	42.35	42.35	0.30	Circ	18"	Conc	1	n/a	1.50	0.012	1037.47	1037.35	0.13	0.30	1042.00	1041.46
	D11	Junction	FROM	131+73.03	-5.00			16.57			0.32																	1037.60	1037.36
			TO	131+42.49	24.34																								
D35	D35	Curb	CHAIN	AMRN		0.21	0.81	5.00	11.78	1.97	1.11	0.53	6.70	7.72	11.72	0.30	Circ	18"	Conc	1	n/a	1.50	0.012	1037.54	1037.50	0.04	0.29	1042.04	1041.71
	D12	Junction	FROM	132+00.00	34.99			15.84			3.54																	1038.27	1038.03
			TO	131+94.69	25.39																								
D36	D36	Junction	CHAIN	AMRN		0.00	0.00	0.00	0.00	0.00	0.00	0.02	6.70	40.38	40.38	0.30	Circ	18"	Conc	1	n/a	1.50	0.012	1038.60	1038.48	0.12	0.30	1043.23	1042.62
	D13	Junction	FROM	134+00.00	-2.50			15.71			0.32																	1038.73	1038.50
			TO	133+70.45	25.50																								
D37	D37	Curb	CHAIN	AMRN		0.20	0.82	5.00	11.78	1.92	1.09	0.52	6.70	5.25	11.75	0.30	Circ	18"	Conc	1	n/a	1.50	0.012	1038.58	1038.55	0.04	0.30	1043.08	1042.74
	D14	Junction	FROM	134+00.00	35.00			14.96			3.51																	1039.30	1039.07
			TO	133+94.33	25.50																								
D38	D38	Junction	CHAIN	AMRN		0.00	0.00	0.00	0.00	0.00	0.00	0.02	6.70	40.38	40.38	0.30	Circ	18"	Conc	1	n/a	1.50	0.012	1039.64	1039.52	0.12	0.30	1044.27	1043.65
	D15	Junction	FROM	136+00.00	-2.50			14.83			0.32																	1039.77	1039.53
			TO	135+70.45	25.50																								
D39	D39	Curb	CHAIN	AMRN		0.19	0.86	5.00	11.78	1.88	1.07	0.52	6.70	7.75	11.75	0.30	Circ	18"	Conc	1	n/a	1.50	0.012	1039.62	1039.59	0.04	0.31	1044.12	1043.78
	D16	Junction	FROM	136+00.00	35.00			10.86			3.48																	1040.33	1040.10
			TO	135+94.33	25.50																								
D40	D40	Junction	CHAIN	AMRN		0.00	0.00	0.00	0.00	0.00	0.00	0.02	6.70	53.94	55.94	0.30	Circ	18"	Conc	1	n/a	1.50	0.012	1040.55	1040.39	0.17	0.30	1045.01	1044.53
	D17	Junction	FROM	137+81.00	-11.94			9.14			0.32																	1040.69	1040.40
			TO	137+39.04	25.50																								
D41	D41	Junction	CHAIN	AMRN		0.00	0.00	0.00	0.00	0.00	0.00	0.07	6.70	7.75	7.75	0.30	Circ	18"	Conc	1	n/a	1.50	0.012	1040.65	1040.63	0.02	0.30	1044.73	1044.81
	D18	Junction	FROM	138+00.00	31.00			4.17			0.03																	1040.78	1040.70
			TO	137+94.33	25.50																								
D42	D42	Junction	CHAIN	AMRN		0.00	0.00	0.00	0.00	0.00	0.00	0.02	6.70	79.90	79.90	0.30	Circ	18"	Conc	1	n/a	1.50	0.012	1041.69	1041.45	0.24	0.30	1045.77	1045.59
	D19	Junction	FROM	140+00.00	-31.00			0.00			0.32																	1041.82	1041.46
			TO	139+43.50	25.50																								

NOTES:
1. LINK DATA WAS CALCULATED IN GEOPAK DRAINAGE.

NUMBER	DATE	REVISION	APPROVED

STATE OF TEXAS
RILEY W. SLADEK
108887
LICENSED PROFESSIONAL ENGINEER
10/4/2016

LJA Engineering, Inc.
FRN - F-1386

Binkley & Barfield, Inc
consulting engineers
Texas Registration Number F-257

CEDAR PARK

ANDERSON MILL RD
HYDRAULIC DATA
LINKS

DESIGN BY: RS
DRAWN BY: CM
CHECKED BY: RS
APPROVED BY: DG
PROJECT NO:
DATE: 10/4/2016

SHEET: 3 OF 16
PAGE: 154

10/4/2016
3:12:03 PM
I:\1841\1402\CADD\SHEETS\NORTH\06-Drainage Details\NAMR*HYDR*DATA*LINKS25*03.dgn

25 YEAR - CONVEYANCE CONFIGURATION DATA

PIPE ID	STRUCTURE ID	STRUCTURE TYPE	LOCATION CHAIN/STATION/OFFSET			CUML AREA (acre)	CUML C	Tc USED ACTUAL Tc (min)	RAIN INT (in/hr)	TOTAL Q (cfs)	FLOW VEL V full / V actual (ft/s)	FLOW DEPTH (ft)	FULL PIPE CAP. (cfs)	ACTUAL PIPE LENGTH (ft)	HYD PIPE LENGTH (ft)	SLOPE (%)	PIPE SHAPE	PIPE SIZE	PIPE MATL	PIPE #	PIPE SPAN (FT)	PIPE RISE (FT)	N VALUE	PIPE INVERT ELEVATION UPPER END	PIPE INVERT ELEVATION LOWER END	FALL (ft)	FR SLOPE (%)	TOP OF GRATE/MH HGL ELEVATION UPPER END	TOP OF GRATE/MH HGL ELEVATION LOWER END
D51	D51	Junction	CHAIN	AMRN		0.00	0.00	0.00	0.00	0.00	0.00	0.07	6.70	6.00	7.50	0.30	Circ	18"	Conc	1	n/a	1.50	0.012	1021.59	1021.57	0.02	0.30	1026.05	1026.34
			FROM	122+00.00	-5.00																								
	D24	Junction	TO	122+00.00	2.50			0.00			0.03																	1021.72	1021.64
E04	E04	Junction	CHAIN	AMRN		8.98	0.60	13.11	8.24	44.50	6.30	1.58	91.72	168.89	171.89	1.39	Circ	36"	Conc	1	n/a	3.00	0.012	1044.11	1041.72	2.39	1.39	1049.61	1046.87
			FROM	144+15.50	-37.50																								
	EOUT	Outlet	TO	142+44.50	-37.50			13.11			11.83																	1046.29	1043.30
E05	E05	Junction	CHAIN	AMRN		7.00	0.60	12.77	8.33	34.88	7.11	1.62	57.95	36.94	39.94	1.47	Circ	30"	Conc	1	n/a	2.50	0.012	1045.20	1044.61	0.59	1.46	1050.25	1049.61
			FROM	144+54.50	-37.50																								
	E04	Junction	TO	144+15.50	-37.50			13.05			10.33																	1047.21	1046.24
E06	E06	Junction	CHAIN	AMRN		7.00	0.60	12.77	8.33	34.88	7.11	1.42	61.80	204.22	204.22	1.67	Circ	30"	Conc	1	n/a	2.50	0.012	1048.61	1045.20	3.41	1.67	1053.61	1050.25
			FROM	146+58.69	-34.31																								
	E05	Junction	TO	144+54.50	-37.50			12.77			12.08																	1050.62	1046.63
E07	E07	Junction	CHAIN	AMRN		4.17	0.63	12.37	8.46	22.35	4.55	1.24	59.86	35.09	35.09	1.57	Circ	30"	Conc	1	n/a	2.50	0.012	1049.17	1048.61	0.55	1.57	1054.27	1053.61
			FROM	146+93.51	-29.90																								
	E06	Junction	TO	146+58.69	-34.31			12.72			9.23																	1050.77	1049.85
E08	E08	Junction	CHAIN	AMRN		4.17	0.63	12.37	8.46	22.35	4.55	1.08	62.35	228.54	228.54	1.70	Circ	30"	Conc	1	n/a	2.50	0.012	1053.05	1049.17	3.89	1.70	1058.05	1054.27
			FROM	149+22.00	-25.50																								
	E07	Junction	TO	146+93.51	-29.90			12.37			10.96																	1054.66	1050.25
E09	E09	Junction	CHAIN	AMRN		3.90	0.62	12.11	8.54	20.67	4.21	1.31	48.50	20.81	23.31	1.03	Circ	30"	Conc	1	n/a	2.50	0.012	1053.29	1053.05	0.24	1.03	1058.42	1058.05
			FROM	149+44.50	-25.50																								
	E08	Junction	TO	149+22.00	-25.50			12.33			7.94																	1054.84	1054.36
E10	E10	Junction	CHAIN	AMRN		3.90	0.62	12.11	8.54	20.67	6.58	1.18	34.70	141.03	143.53	1.73	Circ	24"	Conc	1	n/a	2.00	0.012	1056.28	1053.79	2.49	1.74	1060.78	1058.42
			FROM	150+90.43	-25.50																								
	E09	Junction	TO	149+44.50	-25.50			12.11			10.71																	1057.91	1054.97
E11	E11	Junction	CHAIN	AMRN		0.35	0.81	5.00	11.78	3.34	1.06	0.45	32.87	98.42	100.42	1.55	Circ	24"	Conc	1	n/a	2.00	0.012	1057.84	1056.28	1.56	1.56	1062.46	1060.78
			FROM	151+94.33	-25.50																								
	E10	Junction	TO	150+90.43	-25.50			2.76			6.37																	1058.48	1056.73
E12	E12	Junction	CHAIN	AMRN		0.35	0.81	5.00	11.78	3.34	1.89	0.48	15.93	270.71	272.71	1.69	Circ	18"	Conc	1	n/a	1.50	0.012	1062.96	1058.34	4.62	1.70	1066.96	1062.46
			FROM	154+72.00	-25.50																								
	E11	Junction	TO	151+94.33	-25.50			2.09			6.77																	1063.66	1058.83
E13	E13	Junction	CHAIN	AMRN		0.00	0.00	0.00	0.00	0.00	0.00	0.70	12.64	22.50	22.50	1.07	Circ	18"	Conc	1	n/a	1.50	0.012	1063.20	1062.96	0.24	1.07	1067.32	1066.96
			FROM	154+94.50	-25.50																								
	E12	Junction	TO	154+72.00	-25.50			0.41			0.00																	1063.66	1063.66
E16	E16	Curb	CHAIN	AMRN		1.98	0.62	7.11	10.55	12.86	4.09	1.29	18.64	59.93	62.93	0.50	Circ	24"	Conc	1	n/a	2.00	0.012	1045.43	1045.11	0.31	0.49	1051.72	1049.61
			FROM	144+60.00	7.00																								
	E04	Junction	TO	144+15.50	-37.50			13.05			6.00																	1046.72	1046.40
E17	E17	Junction	CHAIN	AMRN		0.00	0.00	0.00	0.00	0.00	0.00	1.01	6.70	7.78	7.78	0.30	Circ	18"	Conc	1	n/a	1.50	0.012	1046.22	1046.20	0.02	0.30	1050.22	1050.25
			FROM	144+60.00	-43.00																								
	E05	Junction	TO	144+54.50	-37.50			12.77			0.00																	1047.21	1047.21
E18	E18	Curb	CHAIN	AMRN		2.83	0.54	9.17	9.60	14.80	4.71	0.92	42.18	58.42	58.42	2.56	Circ	24"	Conc	1	n/a	2.00	0.012	1050.61	1049.11	1.50	2.55	1055.61	1053.61
			FROM	147+00.00	7.00																								
	E06	Junction	TO	146+58.69	-34.31			12.72			10.55																	1052.00	1050.03
E19	E19	Junction	CHAIN	AMRN		0.00	0.00	0.00	0.00	0.00	0.00	0.61	6.70	7.74	7.74	0.30	Circ	18"	Conc	1	n/a	1.50	0.012	1050.19	1050.17	0.02	0.30	1054.27	1054.27
			FROM	146+99.56	-34.74																								
	E07	Junction	TO	146+93.51	-29.90			12.37			0.00																	1050.77	1050.77
E20	E20	Curb	CHAIN	AMRN		0.27	0.83	5.00	11.78	2.62	1.48	0.39	19.87	39.60	41.60	2.64	Circ	18"	Conc	1	n/a	1.50	0.012	1055.15	1054.05	1.10	2.63	1059.57	1058.05
			FROM	149+50.00	6.50																								
	E08	Junction	TO	149+22.00	-25.50			12.33			7.15																	1056.02	1054.44
E21	E21	Junction	CHAIN	AMRN		0.00	0.00	0.00	0.00	0.00	0.00	0.54	6.70	5.28	7.78	0.30	Circ	18"	Conc	1	n/a	1.50	0.012	1054.32	1054.29	0.02	0.30	1058.40	1058.42
			FROM	149+50.00	-31.00																								
	E09	Junction	TO	149+44.50	-25.50			12.11			0.00																	1054.84	1054.84
E22	E22	Curb	CHAIN	AMRN		3.55	0.60	12.06	8.55	18.28	10.35	1.16	23.30	40.40	42.40	3.62	Circ	18"	Conc	1	n/a	1.50	0.012	1058.32	1056.78	1.54	3.63	1062.32	1060.78
			FROM	151+20.00	6.50																								
	E10	Junction	TO	150+90.43	-25.50			2.76			12.50																	1059.77	1057.94

NOTES:
1. LINK DATA WAS CALCULATED IN GEOPAK DRAINAGE.

NUMBER	DATE	REVISION	APPROVED

STATE OF TEXAS
RILEY W. SLADEK
108887
LICENSED PROFESSIONAL ENGINEER
10/4/2016

LJA Engineering, Inc.
FRN - F-1386

Binkley & Barfield, Inc
consulting engineers
Texas Registration Number F-257

CEDAR PARK

ANDERSON MILL RD
HYDRAULIC DATA
LINKS

DESIGN BY: RS
DRAWN BY: CM
CHECKED BY: RS
APPROVED BY: DG
PROJECT NO:
DATE: 10/4/2016

SHEET: 4 OF 16
PAGE: 155

10/4/2016
3:12:06 PM
I:\1841\1402\CADD\SHEETS\NORTH\06-Drainage Details\NAMR*HYDR*DATA*LINKS25*04.dgn

25 YEAR - CONVEYANCE CONFIGURATION DATA

PIPE ID	STRUCTURE ID	STRUCTURE TYPE	LOCATION CHAIN/STATION/OFFSET			CUML AREA (acre)	CUML C	Tc USED ACTUAL Tc (min)	RAIN INT (in/hr)	TOTAL Q (cfs)	FLOW VEL V full / V actual (ft/s)	FLOW DEPTH (ft)	FULL PIPE CAP. (cfs)	ACTUAL PIPE LENGTH (ft)	HYD PIPE LENGTH (ft)	SLOPE (%)	PIPE SHAPE	PIPE SIZE	PIPE MATL	PIPE #	PIPE SPAN (FT)	PIPE RISE (FT)	N VALUE	PIPE INVERT ELEVATION UPPER END	PIPE INVERT ELEVATION LOWER END	FALL (ft)	FR SLOPE (%)	TOP OF GRATE/MH HGL ELEVATION UPPER END	TOP OF GRATE/MH HGL ELEVATION LOWER END
			CHAIN	AMRN																									
E23	E23	Junction	FROM	152+00.00	-31.00	0.00	0.00	0.00	0.00	0.00	0.00	0.14	6.70	5.75	7.75	0.30	Circ	18"	Conc	1	n/a	1.50	0.012	1058.36	1058.34	0.02	0.30	1062.44	1062.46
	E11	Junction	TO	151+94.33	-25.50			2.09			0.01																	1058.50	1058.48
			CHAIN	AMRN																									
E24	E24	Curb	FROM	155+00.00	6.50	0.35	0.81	5.00	11.78	3.34	1.89	0.45	19.83	39.60	41.60	2.62	Circ	18"	Conc	1	n/a	1.50	0.012	1064.05	1062.96	1.09	2.63	1068.47	1066.96
	E12	Junction	TO	154+72.00	-25.50			0.41			7.55																	1065.07	1063.41
			CHAIN	AMRN																									
E25	E25	Junction	FROM	155+00.00	-31.00	0.00	0.00	0.00	0.00	0.00	0.00	0.46	6.70	7.78	7.78	0.30	Circ	18"	Conc	1	n/a	1.50	0.012	1063.22	1063.20	0.02	0.30	1067.30	1067.32
	E13	Junction	TO	154+94.50	-25.50			0.00			0.00																	1063.66	1063.66
			CHAIN	AMRN																									
E26	E26	Grate	FROM	144+60.00	55.00	1.75	0.60	7.00	10.61	11.08	3.53	0.97	26.36	42.00	48.00	1.00	Circ	24"	Conc	1	n/a	2.00	0.012	1045.91	1045.43	0.48	1.00	1050.00	1051.72
	E16	Curb	TO	144+60.00	7.00			7.00			7.30																	1047.73	1046.40
			CHAIN	AMRN																									
E27	E27	Grate	FROM	147+00.00	55.00	2.57	0.52	9.00	9.67	12.88	4.10	1.39	14.44	42.00	48.00	0.30	Circ	24"	Conc	1	n/a	2.00	0.012	1050.75	1050.61	0.14	0.29	1054.50	1055.61
	E18	Curb	TO	147+00.00	7.00			9.00			5.54																	1052.77	1052.00
			CHAIN	AMRN																									
E28	E28	Grate	FROM	151+20.00	55.00	3.24	0.58	12.00	8.57	16.07	9.10	0.99	25.45	46.50	50.50	4.32	Circ	18"	Conc	1	n/a	1.50	0.012	1059.00	1058.32	0.68	4.33	1062.20	1062.32
	E22	Curb	TO	151+20.00	6.50			12.00			12.96																	1060.12	1059.31
			CHAIN	AMRN																									
F01	F01	Junction	FROM	164+40.00	-14.00	5.05	0.68	13.34	8.17	28.04	3.97	1.71	45.06	63.50	66.00	0.34	Circ	36"	Conc	1	n/a	3.00	0.012	1054.72	1054.50	0.22	0.33	1065.65	1058.00
	FOUT	Outlet	TO	164+40.00	-80.00			13.34			6.72																	1056.51	1056.21
			CHAIN	AMRN																									
F02	F02	Junction	FROM	163+44.34	-14.00	3.63	0.67	13.14	8.23	20.13	6.41	1.55	22.83	93.16	95.66	0.75	Circ	24"	Conc	1	n/a	2.00	0.012	1060.02	1059.30	0.72	0.75	1065.13	1065.65
	F01	Junction	TO	164+40.00	-14.00			13.14			7.68																	1061.63	1060.85
			CHAIN	AMRN																									
F03	F03	Junction	FROM	163+40.32	-14.00	1.15	0.76	5.72	11.33	9.85	3.13	1.61	22.50	4.02	4.02	0.73	Circ	24"	Conc	1	n/a	2.00	0.012	1060.05	1060.02	0.03	0.72	1065.12	1065.13
	F02	Junction	TO	163+44.34	-14.00			6.04			3.63																	1061.63	1061.63
			CHAIN	AMRN																									
F05	F05	Junction	FROM	162+11.53	-14.00	1.15	0.76	5.72	11.33	9.85	3.13	0.96	22.83	126.49	128.49	0.75	Circ	24"	Conc	1	n/a	2.00	0.012	1061.01	1060.05	0.96	0.74	1065.88	1065.12
	F03	Junction	TO	163+40.32	-14.00			5.72			6.60																	1062.13	1061.01
			CHAIN	AMRN																									
F06	F06	Junction	FROM	160+47.09	-14.00	0.65	0.71	5.06	11.74	5.41	3.06	0.65	14.99	159.96	161.96	1.50	Circ	18"	Conc	1	n/a	1.50	0.012	1063.94	1061.51	2.43	1.50	1069.09	1065.88
	F05	Junction	TO	162+11.53	-14.00			5.35			7.38																	1064.84	1062.16
			CHAIN	AMRN																									
F07	F07	Junction	FROM	159+86.50	-14.00	0.65	0.71	5.06	11.74	5.41	3.06	0.90	8.65	60.45	60.45	0.50	Circ	18"	Conc	1	n/a	1.50	0.012	1064.24	1063.94	0.30	0.50	1070.46	1069.09
	F06	Junction	TO	160+47.09	-14.00			5.15			4.91																	1065.14	1064.84
			CHAIN	AMRN																									
F08	F08	Curb	FROM	159+70.00	6.50	0.65	0.71	5.06	11.74	5.41	3.06	0.90	8.66	23.33	25.33	0.50	Circ	18"	Conc	1	n/a	1.50	0.012	1064.37	1064.24	0.13	0.50	1071.70	1070.46
	F07	Junction	TO	159+86.50	-14.00			5.06			4.89																	1065.27	1065.14
			CHAIN	AMRN																									
F09	F09	Grate	FROM	159+70.00	42.00	0.54	0.66	5.00	11.78	4.19	2.37	0.44	27.37	34.42	37.50	5.00	Circ	18"	Conc	1	n/a	1.50	0.012	1066.72	1064.84	1.88	5.01	1071.00	1071.70
	F08	Curb	TO	159+70.00	6.50			5.00			9.84																	1067.88	1065.28
			CHAIN	AMRN																									
F10	F10	Junction	FROM	160+30.00	-31.00	0.00	0.00	0.00	0.00	0.00	0.00	0.90	12.24	23.98	23.98	1.00	Circ	18"	Conc	1	n/a	1.50	0.012	1064.18	1063.94	0.24	1.00	1069.29	1069.09
	F06	Junction	TO	160+47.09	-14.00			5.15			0.00																	1064.84	1064.84
			CHAIN	AMRN																									
F11	F11	Junction	FROM	161+90.00	-31.00	0.00	0.00	0.00	0.00	0.00	0.00	0.62	13.24	25.07	27.07	1.17	Circ	18"	Conc	1	n/a	1.50	0.012	1061.83	1061.51	0.32	1.18	1065.83	1065.88
	F05	Junction	TO	162+11.53	-14.00			5.35			0.00																	1062.13	1062.13
			CHAIN	AMRN																									
F12	F12	Curb	FROM	161+90.00	7.00	0.50	0.82	5.00	11.78	4.81	2.72	0.54	21.63	28.02	30.02	3.12	Circ	18"	Conc	1	n/a	1.50	0.012	1062.59	1061.65	0.94	3.12	1067.09	1065.88
	F05	Junction	TO	162+11.53	-14.00			5.35			8.36																	1063.86	1062.19
			CHAIN	AMRN																									
F13	F13	Junction	FROM	163+23.34	-31.00	0.00	0.00	0.00	0.00	0.00	0.00	1.08	14.30	24.02	24.02	1.36	Circ	18"	Conc	1	n/a	1.50	0.012	1060.88	1060.55	0.33	1.37	1064.88	1065.12
	F03	Junction	TO	163+40.32	-14.00			5.72			0.00																	1061.63	1061.63

NOTES:
1. LINK DATA WAS CALCULATED IN GEOPAK DRAINAGE.

NUMBER	DATE	REVISION	APPROVED

STATE OF TEXAS
RILEY W. SLADEK
108887
LICENSED PROFESSIONAL ENGINEER
10/4/2016

LJA Engineering, Inc.
FRN - F-1386

Binkley & Barfield, Inc
consulting engineers
Texas Registration Number F-257

CEDAR PARK

ANDERSON MILL RD
HYDRAULIC DATA
LINKS

DESIGN BY: RS
DRAWN BY: CM
CHECKED BY: RS
APPROVED BY: DG
PROJECT NO:
DATE: 10/4/2016

SHEET: 5 OF 16
PAGE: 156

10/4/2016
3:12:09 PM
I:\1841\1402\CADD\SHEETS\NORTH\06-Drainage Details\NAMR*HYDR*DATA*LINKS25*05.dgn

25 YEAR - CONVEYANCE CONFIGURATION DATA

PIPE ID	STRUCTURE ID	STRUCTURE TYPE	LOCATION CHAIN/STATION/OFFSET			CUML AREA (acre)	CUML C	Tc USED ACTUAL Tc (min)	RAIN INT (in/hr)	TOTAL Q (cfs)	FLOW VEL V full / V actual (ft/s)	FLOW DEPTH (ft)	FULL PIPE CAP. (cfs)	ACTUAL PIPE LENGTH (ft)	HYD PIPE LENGTH (ft)	SLOPE (%)	PIPE SHAPE	PIPE SIZE	PIPE MATL	PIPE #	PIPE SPAN (FT)	PIPE RISE (FT)	N VALUE	PIPE INVERT ELEVATION UPPER END	PIPE INVERT ELEVATION LOWER END	FALL (ft)	FR SLOPE (%)	TOP OF GRATE/MH HGL ELEVATION UPPER END	TOP OF GRATE/MH HGL ELEVATION LOWER END
			CHAIN	AMRN																									
F14	F14	Curb	FROM	163+23.34	7.00	2.48	0.64	13.08	8.24	13.01	4.14	1.10	26.36	29.70	29.70	1.00	Circ	24"	Conc	1	n/a	2.00	0.012	1060.50	1060.20	0.30	1.01	1066.14	1065.13
	F02	Junction	TO	163+44.34	-14.00			6.04			7.38																	1061.80	1061.30
			CHAIN	AMRN																									
F15	F15	Grate	FROM	163+23.34	41.50	2.26	0.61	13.00	8.27	11.44	3.64	1.01	26.37	29.42	34.50	1.00	Circ	24"	Conc	1	n/a	2.00	0.012	1060.85	1060.50	0.35	1.00	1065.10	1066.14
	F14	Curb	TO	163+23.34	7.00			13.00			7.21																	1062.70	1061.51
			CHAIN	AMRN																									
F16	F16	Junction	FROM	166+73.00	-14.00	0.55	0.81	5.00	11.78	5.28	1.68	1.36	14.44	110.42	112.42	0.30	Circ	24"	Conc	1	n/a	2.00	0.012	1056.42	1056.08	0.34	0.31	1063.51	1065.15
	F21	Junction	TO	165+60.58	-14.00			1.58			2.33																	1057.49	1057.44
			CHAIN	AMRN																									
F17	F17	Junction	FROM	167+61.00	-14.00	0.23	0.86	5.00	11.78	2.29	1.30	0.57	6.70	86.00	88.00	0.30	Circ	18"	Conc	1	n/a	1.50	0.012	1057.19	1056.92	0.26	0.30	1061.48	1063.51
	F16	Junction	TO	166+73.00	-14.00			1.13			3.69																	1057.81	1057.49
			CHAIN	AMRN																									
F18	F18	Curb	FROM	167+78.00	-35.00	0.23	0.86	5.00	11.78	2.29	1.30	0.63	6.70	24.04	26.04	0.30	Circ	18"	Conc	1	n/a	1.50	0.012	1057.26	1057.19	0.08	0.30	1061.26	1061.48
	F17	Junction	TO	167+61.00	-14.00			1.00			3.27																	1058.07	1057.81
			CHAIN	AMRN																									
F19	F19	Curb	FROM	167+30.00	47.00	0.33	0.78	5.00	11.78	2.98	1.69	0.54	11.62	79.21	85.21	0.90	Circ	18"	Conc	1	n/a	1.50	0.012	1057.67	1056.90	0.77	0.90	1062.17	1063.51
	F16	Junction	TO	166+73.00	-14.00			1.13			5.22																	1058.62	1057.44
			CHAIN	AMRN																									
F20	F20	Grate	FROM	166+15.00	41.50	0.87	0.62	6.00	11.16	6.01	3.40	0.50	27.37	76.96	78.04	5.00	Circ	18"	Conc	1	n/a	1.50	0.012	1060.47	1056.57	3.90	5.01	1063.63	1065.15
	F21	Junction	TO	165+60.58	-14.00			1.58			11.50																	1061.94	1057.07
			CHAIN	AMRN																									
F21	F21	Junction	FROM	165+60.58	-14.00	1.42	0.69	6.11	11.09	10.94	3.48	1.19	14.44	118.08	120.58	0.30	Circ	24"	Conc	1	n/a	2.00	0.012	1056.08	1055.72	0.36	0.30	1065.15	1065.65
	F01	Junction	TO	164+40.00	-14.00			13.14			5.64																	1057.44	1056.91
			CHAIN	AMRN																									
G01	G01	Junction	FROM	177+54.25	61.08	3.19	0.72	15.49	7.60	27.36	5.57	1.78	28.21	71.93	74.93	0.35	Circ	30"	Conc	1	n/a	2.50	0.012	1047.76	1047.50	0.26	0.34	1052.73	1053.00
	GOUT	Outlet	TO	177+53.00	136.00			15.49			7.30																	1049.78	1049.28
			CHAIN	AMRN																									
G02	G02	Junction	FROM	177+30.67	37.50	2.53	0.74	15.40	7.63	24.34	4.96	2.02	29.64	29.11	35.11	0.38	Circ	30"	Conc	1	n/a	2.50	0.012	1047.90	1047.76	0.13	0.38	1053.58	1052.73
	G01	Junction	TO	177+54.25	61.08			15.40			5.73																	1049.87	1049.78
			CHAIN	AMRN																									
G03	G03	Junction	FROM	176+40.12	37.50	0.79	0.86	5.00	11.78	7.95	4.50	1.09	7.74	87.55	90.55	0.40	Circ	18"	Conc	1	n/a	1.50	0.012	1049.26	1048.90	0.36	0.42	1053.82	1053.58
	G02	Junction	TO	177+30.67	37.50			1.60			5.77																	1050.57	1049.99
			CHAIN	AMRN																									
G04	G04	Junction	FROM	175+05.50	37.50	0.34	0.86	5.00	11.78	3.47	1.96	1.31	7.75	134.62	134.62	0.40	Circ	18"	Conc	1	n/a	1.50	0.012	1049.80	1049.26	0.54	0.39	1054.17	1053.82
	G03	Junction	TO	176+40.12	37.50			1.04			2.12																	1050.65	1050.57
			CHAIN	AMRN																									
G05	G05	Curb	FROM	175+00.00	47.00	0.34	0.86	5.00	11.78	3.47	1.96	0.85	9.37	7.78	11.78	0.59	Circ	18"	Conc	1	n/a	1.50	0.012	1049.87	1049.80	0.07	0.58	1054.50	1054.17
	G04	Junction	TO	175+05.50	37.50			1.00			3.36																	1050.91	1050.65
			CHAIN	AMRN																									
G06	G06	Curb	FROM	176+34.62	47.00	0.45	0.85	5.00	11.78	4.48	2.54	1.05	11.90	7.78	11.78	0.95	Circ	18"	Conc	1	n/a	1.50	0.012	1049.63	1049.52	0.11	0.94	1054.13	1053.82
	G03	Junction	TO	176+40.12	37.50			1.04			3.39																	1050.85	1050.57
			CHAIN	AMRN																									
G07	G07	Junction	FROM	176+55.67	-37.50	1.30	0.64	15.06	7.71	16.42	5.23	1.98	16.14	40.31	40.31	0.37	Circ	24"	Conc	1	n/a	2.00	0.012	1048.74	1048.59	0.15	0.39	1055.26	1054.70
	G16	Junction	TO	176+84.17	-9.00			15.10			5.24																	1050.74	1050.57
			CHAIN	AMRN																									
G08	G08	Junction	FROM	176+40.12	-37.50	1.30	0.64	15.06	7.71	16.42	5.23	2.00	18.77	15.55	15.55	0.51	Circ	24"	Conc	1	n/a	2.00	0.012	1048.82	1048.74	0.08	0.50	1055.17	1055.26
	G07	Junction	TO	176+55.67	-37.50			15.06			5.23																	1050.80	1050.74
			CHAIN	AMRN																									
G09	G09	Junction	FROM	174+05.50	-37.50	0.21	0.85	5.00	11.78	12.08	3.85	1.99	17.58	234.62	234.62	0.44	Circ	24"	Conc	1	n/a	2.00	0.012	1049.86	1048.82	1.04	0.45	1055.07	1055.17
	G08	Junction	TO	176+40.12	-37.50			1.03			3.85																	1051.19	1050.80
			CHAIN	AMRN																									
G10	G10	Curb	FROM	174+00.00	-47.00	0.21	0.85	5.00	11.78	12.08	3.85	1.33	17.73	7.78	11.78	0.45	Circ	24"	Conc	1	n/a	2.00	0.012	1049.92	1049.86	0.05	0.45	1055.47	1055.07
	G09	Junction	TO	174+05.50	-37.50			1.00			5.47																	1051.22	1051.19

NOTES:
1. LINK DATA WAS CALCULATED IN GEOPAK DRAINAGE.

NUMBER	DATE	REVISION	APPROVED

STATE OF TEXAS
RILEY W. SLADEK
108887
LICENSED PROFESSIONAL ENGINEER
10/4/2016

LJA Engineering, Inc.
FRN - F-1386

Binkley & Barfield, Inc
consulting engineers
Texas Registration Number F-257

CEDAR PARK

ANDERSON MILL RD
HYDRAULIC DATA
LINKS

DESIGN BY: RS
DRAWN BY: CM
CHECKED BY: RS
APPROVED BY: DG
PROJECT NO:
DATE: 10/4/2016

SHEET: 6 OF 16
PAGE: 157

10/4/2016
3:12:13 PM
I:\1841\1402\CADD\SHEETS\NORTH\06-Drainage Details\NAMR*HYDR*DATA*LINKS25*06.dgn

25 YEAR - CONVEYANCE CONFIGURATION DATA

PIPE ID	STRUCTURE ID	STRUCTURE TYPE	LOCATION CHAIN/STATION/OFFSET			CUML AREA (acre)	CUML C	Tc USED ACTUAL Tc (min)	RAIN INT (in/hr)	TOTAL Q (cfs)	FLOW VEL V full / V actual (ft/s)	FLOW DEPTH (ft)	FULL PIPE CAP. (cfs)	ACTUAL PIPE LENGTH (ft)	HYD PIPE LENGTH (ft)	SLOPE (%)	PIPE SHAPE	PIPE SIZE	PIPE MATL	PIPE #	PIPE SPAN (FT)	PIPE RISE (FT)	N VALUE	PIPE INVERT ELEVATION UPPER END	PIPE INVERT ELEVATION LOWER END	FALL (ft)	FR SLOPE (%)	TOP OF GRATE/MH HGL ELEVATION UPPER END	TOP OF GRATE/MH HGL ELEVATION LOWER END
			CHAIN	AMRN																									
G11	G11	Junction	FROM	174+00.00	-73.00	0.00	0.00	0.00	0.00	10.00	6.37	0.92	4.72	26.00	26.00	0.32	Circ	12"	Conc	2	n/a	1.00	0.012	1051.00	1050.92	0.08	1.45	1053.00	1055.47
	G10	Curb	TO	174+00.00	-47.00			0.00			6.63																	1053.27	1051.83
			CHAIN	AMRN																									
G12	G12	Curb	FROM	176+34.62	-7.00	0.44	0.85	5.00	11.78	4.40	2.49	0.61	14.31	41.80	49.80	1.37	Circ	18"	Conc	1	n/a	1.50	0.012	1049.77	1049.09	0.68	1.37	1055.03	1054.70
	G16	Junction	TO	176+84.17	-9.00			15.10			6.58																	1050.97	1049.70
			CHAIN	AMRN																									
G13	G13	Grate	FROM	176+20.00	-54.00	1.09	0.60	15.00	7.72	5.07	2.87	0.65	16.02	24.81	26.80	1.71	Circ	18"	Conc	1	n/a	1.50	0.012	1049.78	1049.32	0.46	1.71	1054.00	1055.17
	G08	Junction	TO	176+40.12	-37.50			1.03			6.96																	1051.09	1049.97
			CHAIN	AMRN																									
G14	G14	Junction	FROM	177+41.50	-71.23	0.66	0.61	8.00	10.11	4.08	2.31	0.44	23.13	128.06	133.06	3.57	Circ	EX 18"	Conc	1	n/a	1.50	0.012	1054.75	1050.00	4.75	3.56	1058.00	1052.73
	G01	Junction	TO	177+54.25	61.08			15.40			9.33																	1055.52	1050.44
			CHAIN	AMRN																									
G15	G15	Grate	FROM	177+22.90	-108.50	0.66	0.61	8.00	10.11	4.08	2.31	0.77	6.70	37.77	41.77	0.30	Circ	18"	Conc	1	n/a	1.50	0.012	1054.88	1054.75	0.13	0.30	1058.00	1058.00
	G14	Junction	TO	177+41.50	-71.23			8.00			4.44																	1056.02	1055.52
			CHAIN	AMRN																									
G16	G16	Junction	FROM	176+84.17	-9.00	1.74	0.69	15.23	7.67	19.25	6.13	1.58	14.44	63.67	66.67	0.30	Circ	24"	Conc	1	n/a	2.00	0.012	1048.60	1048.40	0.20	0.53	1054.70	1053.58
	G02	Junction	TO	177+30.67	37.50			1.60			7.24																	1050.57	1049.97
			CHAIN	AMRN																									
J01	J01	Junction	FROM	107+10.96	-19.00	0.29	0.84	5.00	11.78	2.87	1.83	0.82	4.15	110.64	110.64	0.25	Circ	12"	Conc	2	n/a	1.00	0.012	1019.97	1019.69	0.28	0.25	1022.42	1022.85
	J04	Junction	TO	106+00.00	-18.86			2.05			2.07																	1020.67	1020.52
			CHAIN	AMRN																									
J02	J02	Curb	FROM	107+13.46	-26.50	0.29	0.84	5.00	11.78	2.87	1.83	0.70	4.15	4.30	8.30	0.25	Circ	12"	Conc	2	n/a	1.00	0.012	1019.99	1019.97	0.02	0.25	1022.77	1022.42
	J01	Junction	TO	107+10.96	-19.00			2.00			2.43																	1020.74	1020.67
			CHAIN	AMRN																									
J03	J03	Junction	FROM	105+15.00	-20.14	0.29	0.84	5.00	11.78	2.87	1.83	1.00	4.15	45.45	45.45	0.25	Circ	12"	Conc	2	n/a	1.00	0.012	1019.48	1019.37	0.11	0.25	1023.15	1023.33
	JOUT	Outlet	TO	104+69.30	-14.50			3.26			1.83																	1020.42	1020.37
			CHAIN	AMRN																									
J04	J04	Junction	FROM	106+00.00	-18.86	0.29	0.84	5.00	11.78	2.87	1.83	0.94	4.15	83.32	83.32	0.25	Circ	12"	Conc	2	n/a	1.00	0.012	1019.69	1019.48	0.21	0.25	1022.85	1023.15
	J03	Junction	TO	105+15.00	-20.14			2.74			1.87																	1020.52	1020.42
			CHAIN	AMRN																									
K01	K01	Junction	FROM	105+75.00	-27.00	18.36	0.25	82.00	2.76	12.65	7.16	1.34	11.30	104.45	104.45	0.85	Circ	EX 18"	Conc	1	n/a	1.50	0.012	1020.32	1019.43	0.89	1.07	1023.06	1023.33
	KOUT	Outlet	TO	104+68.31	-22.04			82.05			7.60																	1022.13	1020.77
			CHAIN	AMRN																									
K02	K02	Junction	FROM	105+80.00	-30.00	18.36	0.25	82.00	2.76	12.65	7.16	1.50	12.24	5.71	5.71	1.00	Circ	18"	Conc	1	n/a	1.50	0.012	1020.38	1020.32	0.06	1.07	1022.99	1023.06
	K01	Junction	TO	105+75.00	-27.00			82.03			7.16																	1022.20	1022.13
			CHAIN	AMRN																									
K03	K03	Junction	FROM	105+95.00	-30.00	18.36	0.25	82.00	2.76	12.65	7.16	1.50	11.25	14.55	14.55	0.84	Circ	18"	Conc	1	n/a	1.50	0.012	1020.50	1020.38	0.12	1.07	1022.60	1022.99
	K02	Junction	TO	105+80.00	-30.00			82.00			7.16																	1023.53	1022.20
			CHAIN	AMRN																									
N01	N01	Junction	FROM	173+01.40	-37.50	1.05	0.86	5.00	11.78	10.58	5.99	1.25	7.97	33.50	35.50	0.42	Circ	18"	Conc	1	n/a	1.50	0.012	1051.65	1051.50	0.15	0.75	1055.19	1055.14
	NOUT	Outlet	TO	173+01.40	-73.00			2.26			6.73																	1053.17	1052.75
			CHAIN	AMRN																									
N02	N02	Junction	FROM	172+26.40	-37.50	0.80	0.86	5.00	11.78	8.03	4.55	1.50	7.06	73.00	75.00	0.33	Circ	18"	Conc	1	n/a	1.50	0.012	1051.90	1051.65	0.25	0.43	1055.56	1055.19
	N01	Junction	TO	173+01.40	-37.50			1.99			4.55																	1053.55	1053.17
			CHAIN	AMRN																									
N03	N03	Junction	FROM	170+73.30	-37.50	0.52	0.86	5.00	11.78	5.27	2.98	0.84	9.54	153.10	153.10	0.61	Circ	18"	Conc	1	n/a	1.50	0.012	1052.83	1051.90	0.93	0.60	1056.33	1055.56
	N02	Junction	TO	172+26.40	-37.50			1.50			5.20																	1053.71	1052.74
			CHAIN	AMRN																									
N04	N04	Junction	FROM	169+98.30	-37.50	0.18	0.86	5.00	11.78	1.86	1.05	0.48	9.20	75.00	75.00	0.56	Circ	18"	Conc	1	n/a	1.50	0.012	1053.25	1052.83	0.42	0.57	1056.92	1056.33
	N03	Junction	TO	170+73.30	-37.50			1.07			3.86																	1053.77	1053.31
			CHAIN	AMRN																									
N05	N05	Curb	FROM	169+92.80	-47.00	0.18	0.86	5.00	11.78	1.86	1.05	0.51	6.11	7.78	11.78	0.25	Circ	18"	Conc	1	n/a	1.50	0.012	1053.28	1053.25	0.03	0.24	1057.28	1056.92
	N04	Junction	TO	169+98.30	-37.50			1.00			3.48																	1053.98	1053.77
			CHAIN	AMRN																									
N06	N06	Curb	FROM	172+20.90	-47.00	0.28	0.85	5.00	11.78	2.76	1.56	1.50	6.11	7.78	11.78	0.25	Circ	18"	Conc	1	n/a	1.50	0.012	1051.93	1051.90	0.03	0.25	1055.90	1055.56
	N02	Junction	TO	172+26.40	-37.50			1.50			1.56																	1053.56	1053.55

NOTES:
1. LINK DATA WAS CALCULATED IN GEOPAK DRAINAGE.

NUMBER	DATE	REVISION	APPROVED

STATE OF TEXAS
RILEY W. SLADEK
108887
LICENSED PROFESSIONAL ENGINEER
10/4/2016

LJA Engineering, Inc.
FRN - F-1386

Binkley & Barfield, Inc
consulting engineers
Texas Registration Number F-257

CEDAR PARK

ANDERSON MILL RD
HYDRAULIC DATA
LINKS

DESIGN BY: RS
DRAWN BY: CM
CHECKED BY: RS
APPROVED BY: DG
PROJECT NO:
DATE: 10/4/2016

SHEET: 7 OF 16
PAGE: 158

10/4/2016
3:12:16 PM
I:\1841\1402\CADD\SHEETS\NORTH\06-Drainage Details\NAMR*HYDR*DATA*LINKS25*07.dgn

25 YEAR - CONVEYANCE CONFIGURATION DATA

PIPE ID	STRUCTURE ID	STRUCTURE TYPE	LOCATION CHAIN/STATION/OFFSET			CUML AREA (acre)	CUML C	Tc USED ACTUAL Tc (min)	RAIN INT (in/hr)	TOTAL Q (cfs)	FLOW VEL V full / V actual (ft/s)	FLOW DEPTH (ft)	FULL PIPE CAP. (cfs)	ACTUAL PIPE LENGTH (ft)	HYD PIPE LENGTH (ft)	SLOPE (%)	PIPE SHAPE	PIPE SIZE	PIPE MATL	PIPE #	PIPE SPAN (FT)	PIPE RISE (FT)	N VALUE	PIPE INVERT ELEVATION UPPER END	PIPE INVERT ELEVATION LOWER END	FALL (ft)	FR SLOPE (%)	TOP OF GRATE/MH HGL ELEVATION UPPER END	TOP OF GRATE/MH HGL ELEVATION LOWER END
			CHAIN	AMRN																									
N07	N07	Curb	FROM	172+20.90	47.00	0.25	0.86	5.00	11.78	2.55	1.44	1.50	7.04	111.84	117.84	0.33	Circ	18"	Conc	1	n/a	1.50	0.012	1052.04	1051.65	0.39	0.33	1055.90	1055.19
	N01	Junction	TO	173+01.40	-37.50			1.99			1.44																	1053.22	1053.17
			CHAIN	AMRN																									
N08	N08	Curb	FROM	169+92.80	47.00	0.34	0.86	5.00	11.78	3.41	1.93	0.88	7.59	113.84	117.84	0.38	Circ	18"	Conc	1	n/a	1.50	0.012	1053.28	1052.83	0.45	0.38	1057.28	1056.33
	N03	Junction	TO	170+73.30	-37.50			1.07			3.14																	1054.31	1053.71
			CHAIN	AMRN																									
P01	P01	Junction	FROM	120+30.00	19.50	0.00	0.00	0.00	0.00	0.00	0.00	0.01	27.39	28.28	28.28	5.01	Circ	18"	Conc	1	n/a	1.50	0.012	1017.42	1016.00	1.42	5.01	1024.04	1023.98
	POUT	Outlet	TO	120+14.90	42.83			0.63			1.05																	1017.51	1016.01
			CHAIN	AMRN																									
P02	P02	Junction	FROM	120+30.00	2.50	0.00	0.00	0.00	0.00	0.00	0.00	0.01	17.31	15.50	17.00	2.00	Circ	18"	Conc	1	n/a	1.50	0.012	1017.76	1017.42	0.34	2.00	1023.40	1024.04
	P01	Junction	TO	120+30.00	19.50			0.26			0.76																	1017.85	1017.43
			CHAIN	AMRN																									
P03	P03	Junction	FROM	120+30.00	-5.00	0.00	0.00	0.00	0.00	0.00	0.00	0.02	12.24	6.00	7.50	1.00	Circ	18"	Conc	1	n/a	1.50	0.012	1017.83	1017.76	0.08	1.00	1023.11	1023.40
	P02	Junction	TO	120+30.00	2.50			0.00			0.25																	1017.96	1017.77
			CHAIN	AMRN																									
W01	W01	Grate	FROM	120+00.00	68.00	0.18	0.40	5.00	11.78	0.83	0.24	0.18	29.00	28.65	30.65	1.40	Circ	18"	Conc	2	n/a	1.50	0.012	1015.93	1015.50	0.43	1.41	1019.43	1021.29
	WOUT	Outlet	TO	120+24.45	53.88			5.00			3.42																	1016.21	1015.68

NOTES:
1. LINK DATA WAS CALCULATED IN GEOPAK DRAINAGE.

NUMBER	DATE	REVISION	APPROVED

STATE OF TEXAS
RILEY W. SLADEK
108887
LICENSED
PROFESSIONAL ENGINEER
10/4/2016

LJA Engineering, Inc.
FRN - F-1386

Binkley & Barfield, Inc
consulting engineers
Texas Registration Number F-257

CEDAR PARK

ANDERSON MILL RD
HYDRAULIC DATA
LINKS

DESIGN BY: RS
DRAWN BY: CM
CHECKED BY: RS
APPROVED BY: DG
PROJECT NO:
DATE: 10/4/2016

SHEET: 8 OF 16
PAGE: 159

10/4/2016
3:12:18 PM
I:\1841\1402\CADD\SHEETS\NORTH\06-Drainage Details\NAMR*HYDR*DATA*LINKS25*08.dgn

100 YEAR - CONVEYANCE CONFIGURATION DATA

PIPE ID	STRUCTURE ID	STRUCTURE TYPE	LOCATION CHAIN/STATION/OFFSET			CUML AREA (acre)	CUML C	Tc USED ACTUAL Tc (min)	RAIN INT (in/hr)	TOTAL Q (cfs)	FLOW VEL V full / V actual (ft/s)	FLOW DEPTH (ft)	FULL PIPE CAP. (cfs)	ACTUAL PIPE LENGTH (ft)	HYD PIPE LENGTH (ft)	SLOPE (%)	PIPE SHAPE	PIPE SIZE	PIPE MATL	PIPE #	PIPE SPAN (FT)	PIPE RISE (FT)	N VALUE	PIPE INVERT ELEVATION UPPER END	PIPE INVERT ELEVATION LOWER END	FALL (ft)	FR SLOPE (%)	TOP OF GRATE/MH HGL ELEVATION UPPER END	TOP OF GRATE/MH HGL ELEVATION LOWER END
			ON	AMRN							2.75																		
B01	B01	Junction	FROM	107+08.96	18.00	0.35	0.84	5.00	14.88	4.32	3.03	0.85	4.55	236.47	236.47	0.30	Circ	12"	Conc	2	n/a	1.00	0.012	1019.72	1019.01	0.71	0.29	1022.44	1022.89
	BOUT	Outlet	TO	104+75.80	28.00			2.06			2.75	1.00																1020.75	1020.01
			ON	AMRN							2.75																		
B02	B02	Curb	FROM	107+13.46	26.50	0.35	0.84	5.00	14.88	4.32	3.03	0.85	4.55	6.36	10.36	0.30	Circ	12"	Conc	2	n/a	1.00	0.012	1019.75	1019.72	0.03	0.29	1022.77	1022.44
	B01	Junction	TO	107+08.96	18.00			2.00			2.75	1.00																1020.78	1020.75
			ON	AMRN							7.04																		
C01	C01	Junction	FROM	118+51.21	19.50	0.94	0.89	5.00	14.88	12.43	7.22	1.50	6.70	140.49	140.49	0.30	Circ	18"	Conc	1	n/a	1.50	0.012	1016.67	1016.25	0.42	1.03	1022.86	1023.57
	COUT	Outlet	TO	119+87.16	19.50			5.18			7.50	1.33																1019.35	1017.58
			ON	AMRN							7.03																		
C02	C02	Junction	FROM	116+74.78	29.07	0.94	0.89	5.00	14.88	12.43	7.22	1.50	6.70	179.75	179.75	0.30	Circ	18"	Conc	1	n/a	1.50	0.012	1017.21	1016.67	0.54	1.03	1023.36	1022.86
	C01	Junction	TO	118+51.21	19.50			4.77			7.03	1.50																1021.50	1019.35
			ON	AMRN							5.11																		
C03	C03	Junction	FROM	114+75.53	29.50	0.70	0.87	5.00	14.88	9.03	5.25	1.50	6.70	81.36	81.36	0.30	Circ	18"	Conc	1	n/a	1.50	0.012	1017.80	1017.56	0.24	0.54	1023.62	1023.43
	C13	Junction	TO	115+57.38	30.28			4.20			5.11	1.50																1023.10	1022.59
			ON	AMRN							2.88																		
C04	C04	Junction	FROM	110+28.50	17.00	0.40	0.85	5.00	14.88	5.09	3.92	1.03	6.70	446.61	446.61	0.30	Circ	18"	Conc	1	n/a	1.50	0.012	1019.14	1017.80	1.34	0.30	1023.63	1023.62
	C03	Junction	TO	114+75.53	29.50			2.31			2.88	1.50																1023.99	1023.10
			ON	AMRN							1.66																		
C05	C05	Junction	FROM	109+95.50	17.00	0.23	0.86	5.00	14.88	2.94	3.47	0.73	6.70	33.00	33.00	0.30	Circ	18"	Conc	1	n/a	1.50	0.012	1019.24	1019.14	0.10	0.30	1023.49	1023.63
	C04	Junction	TO	110+28.50	17.00			2.06			1.66	1.50																1024.02	1023.99
			ON	AMRN							1.66																		
C06	C06	Curb	FROM	109+90.00	26.50	0.23	0.86	5.00	14.88	2.94	3.47	0.73	6.70	7.78	11.78	0.30	Circ	18"	Conc	1	n/a	1.50	0.012	1019.28	1019.24	0.04	0.30	1023.78	1023.49
	C05	Junction	TO	109+95.50	17.00			2.00			1.66	1.50																1024.03	1024.02
			ON	AMRN							0.00																		
C07	C07	Junction	FROM	118+37.49	2.60	0.00	0.00	0.00	0.00	0.00	0.97	0.01	24.48	20.82	22.32	4.00	Circ	18"	Conc	1	n/a	1.50	0.012	1017.56	1016.67	0.89	4.00	1022.27	1022.86
	C01	Junction	TO	118+51.21	19.50			4.77			0.00	1.50																1019.35	1019.35
			ON	AMRN							0.81																		
C08	C08	Junction	FROM	116+60.00	9.38	0.10	0.95	5.00	14.88	1.44	7.20	0.26	24.48	23.41	24.91	4.00	Circ	18"	Conc	1	n/a	1.50	0.012	1018.21	1017.21	1.00	4.01	1023.08	1023.36
	C02	Junction	TO	116+74.78	29.07			2.18			0.81	1.50																1021.50	1021.50
			ON	AMRN							2.23																		
C09	C09	Curb	FROM	114+70.00	39.53	0.30	0.89	5.00	14.88	3.94	10.34	0.40	26.94	8.16	12.16	4.84	Circ	18"	Conc	1	n/a	1.50	0.012	1018.39	1017.80	0.59	4.85	1023.82	1023.62
	C03	Junction	TO	114+75.53	29.50			2.31			2.23	1.50																1023.11	1023.10
			ON	AMRN							1.22																		
C10	C10	Curb	FROM	109+90.00	-26.50	0.17	0.84	5.00	14.88	2.16	3.23	0.61	6.70	55.16	59.16	0.30	Circ	18"	Conc	1	n/a	1.50	0.012	1019.32	1019.14	0.18	0.31	1023.78	1023.63
	C04	Junction	TO	110+28.50	17.00			2.06			1.22	1.50																1024.02	1023.99
			ON	AMRN							0.00																		
C11	C11	Junction	FROM	118+37.49	-5.00	0.00	0.00	0.00	0.00	0.00	0.62	0.01	17.35	6.10	7.60	2.01	Circ	18"	Conc	1	n/a	1.50	0.012	1017.72	1017.56	0.15	2.01	1022.93	1022.27
	C07	Junction	TO	118+37.49	2.60			0.00			0.00	1.50																1019.35	1019.35
			ON	AMRN							0.81																		
C12	C12	Curb	FROM	116+60.00	-28.13	0.10	0.95	5.00	14.88	1.44	3.47	0.43	8.79	32.01	37.51	0.52	Circ	18"	Conc	1	n/a	1.50	0.012	1018.40	1018.21	0.19	0.51	1022.80	1023.08
	C08	Junction	TO	116+60.00	9.38			2.00			0.81	1.50																1021.51	1021.50
			ON	AMRN							6.22																		
C13	C13	Junction	FROM	115+57.38	30.28	0.84	0.88	5.00	14.88	10.99	6.38	1.50	6.70	116.71	116.71	0.30	Circ	18"	Conc	1	n/a	1.50	0.012	1017.56	1017.21	0.35	0.81	1023.43	1023.36
	C02	Junction	TO	116+74.78	29.07			2.18			6.22	1.50																1022.59	1021.50
			ON	AMRN							1.11																		
C14	C14	Curb	FROM	115+00.00	-26.67	0.14	0.93	5.00	14.88	1.96	5.60	0.38	15.08	78.03	82.03	1.52	Circ	18"	Conc	1	n/a	1.50	0.012	1018.81	1017.56	1.24	1.53	1023.70	1023.43
	C13	Junction	TO	115+57.38	30.28			4.20			1.11	1.50																1022.61	1022.59
			ON	AMRN							1.88																		
D01	D01	Junction	FROM	121+35.00	19.50	1.26	0.83	18.36	8.77	9.24	10.58	0.58	82.79	96.21	96.21	3.00	Circ	30"	Conc	1	n/a	2.50	0.012	1018.89	1016.00	2.89	3.01	1026.71	1021.67
	DOUT	Outlet	TO	120+87.00	99.69			18.91			10.33	0.59																1019.90	1016.59
			ON	AMRN							1.88																		
D02	D02	Junction	FROM	121+86.18	19.50	1.26	0.83	18.36	8.77	9.24	10.63	0.58	83.40	53.01	53.01	3.04	Circ	30"	Conc	1	n/a	2.50	0.012	1020.50	1018.89	1.61	3.04	1026.71	1026.71
	D01	Junction	TO	121+35.00	19.50			18.82			9.79	0.62																1021.51	1019.50

NOTES:
1. LINK DATA WAS CALCULATED IN GEOPAK DRAINAGE.

NUMBER	DATE	REVISION	APPROVED

STATE OF TEXAS
RILEY W. SLADEK
108887
LICENSED PROFESSIONAL ENGINEER
10/4/2016

LJA Engineering, Inc.
FRN - F-1386

Binkley & Barfield, Inc
consulting engineers
Texas Registration Number F-257

CEDAR PARK

ANDERSON MILL RD
HYDRAULIC DATA
LINKS

DESIGN BY: RS
DRAWN BY: CM
CHECKED BY: RS
APPROVED BY: DG
PROJECT NO:
DATE: 10/4/2016

SHEET: 9 OF 16
PAGE: 160

10/4/2016
3:12:21 PM
I:\1841\1402\CADD\SHEETS\NORTH\06-Drainage Details\NAMR*HYDR*DATA*LINKS100*01.dgn

100 YEAR - CONVEYANCE CONFIGURATION DATA

PIPE ID	STRUCTURE ID	STRUCTURE TYPE	LOCATION CHAIN/STATION/OFFSET			CUML AREA (acre)	CUML C	Tc USED ACTUAL Tc (min)	RAIN INT (in/hr)	TOTAL Q (cfs)	FLOW VEL V full / V actual (ft/s)	FLOW DEPTH (ft)	FULL PIPE CAP. (cfs)	ACTUAL PIPE LENGTH (ft)	HYD PIPE LENGTH (ft)	SLOPE (%)	PIPE SHAPE	PIPE SIZE	PIPE MATL	PIPE #	PIPE SPAN (FT)	PIPE RISE (FT)	N VALUE	PIPE INVERT ELEVATION UPPER END	PIPE INVERT ELEVATION LOWER END	FALL (ft)	FR SLOPE (%)	TOP OF GRATE/MH HGL ELEVATION UPPER END	TOP OF GRATE/MH HGL ELEVATION LOWER END
			ON	AMRN							1.88																		
D03	D03	Junction	FROM	124+05.50	19.50	1.26	0.83	18.36	8.77	9.24	9.34	0.64	69.63	221.90	221.90	2.12	Circ	30"	Conc	1	n/a	2.50	0.012	1025.21	1020.50	4.71	2.12	1030.40	1026.71
	D02	Junction	TO	121+86.18	19.50			18.43			9.33	0.64																1026.22	1021.14
			ON	AMRN							1.88																		
D04	D04	Junction	FROM	124+44.50	19.50	1.26	0.83	18.36	8.77	9.23	9.11	0.65	67.21	39.00	39.00	1.98	Circ	30"	Conc	1	n/a	2.50	0.012	1025.98	1025.21	0.77	1.97	1031.01	1030.40
	D03	Junction	TO	124+05.50	19.50			18.36			8.18	0.70																1026.99	1025.91
			ON	AMRN							1.70																		
D05	D05	Junction	FROM	125+55.50	19.50	1.14	0.83	18.06	8.85	8.36	8.55	0.63	63.87	111.00	111.00	1.79	Circ	30"	Conc	1	n/a	2.50	0.012	1027.96	1025.98	1.98	1.79	1032.96	1031.01
	D04	Junction	TO	124+44.50	19.50			18.14			8.44	0.64																1028.92	1026.62
			ON	AMRN							1.70																		
D06	D06	Junction	FROM	125+94.50	19.50	1.14	0.83	18.06	8.85	8.36	8.44	0.64	62.69	39.00	39.00	1.72	Circ	30"	Conc	1	n/a	2.50	0.012	1028.63	1027.96	0.67	1.72	1033.74	1032.96
	D05	Junction	TO	125+55.50	19.50			18.06			7.68	0.68																1029.59	1028.64
			ON	AMRN							1.46																		
D07	D07	Junction	FROM	127+55.50	19.50	0.97	0.83	17.66	8.95	7.17	8.85	0.55	71.31	161.00	161.00	2.23	Circ	30"	Conc	1	n/a	2.50	0.012	1032.22	1028.63	3.58	2.23	1036.96	1033.74
	D06	Junction	TO	125+94.50	19.50			17.76			8.80	0.56																1033.10	1029.19
			ON	AMRN							1.46																		
D08	D08	Junction	FROM	127+94.50	19.50	0.97	0.83	17.66	8.95	7.17	6.75	0.67	48.86	39.00	39.00	1.04	Circ	30"	Conc	1	n/a	2.50	0.012	1032.62	1032.22	0.41	1.04	1037.74	1036.96
	D07	Junction	TO	127+55.50	19.50			17.66			6.40	0.70																1033.51	1032.91
			ON	AMRN							1.21																		
D09	D09	Junction	FROM	129+50.64	20.50	0.79	0.82	17.18	9.08	5.93	7.45	0.55	60.52	156.15	156.15	1.60	Circ	30"	Conc	1	n/a	2.50	0.012	1035.13	1032.62	2.50	1.61	1040.13	1037.74
	D08	Junction	TO	127+94.50	19.50			17.32			7.42	0.55																1035.93	1033.17
			ON	AMRN							1.21																		
D10	D10	Junction	FROM	129+94.69	21.39	0.79	0.82	17.18	9.08	5.93	5.30	0.70	37.55	44.06	44.06	0.62	Circ	30"	Conc	1	n/a	2.50	0.012	1035.40	1035.13	0.27	0.62	1040.57	1040.13
	D09	Junction	TO	129+50.64	20.50			17.18			5.23	0.70																1036.20	1035.83
			ON	AMRN							0.93																		
D11	D11	Junction	FROM	131+42.49	24.34	0.59	0.83	16.45	9.28	4.55	4.97	0.61	38.28	147.82	147.82	0.64	Circ	30"	Conc	1	n/a	2.50	0.012	1036.35	1035.40	0.95	0.64	1041.46	1040.57
	D10	Junction	TO	129+94.69	21.39			16.68			4.97	0.61																1037.05	1036.00
			ON	AMRN							0.93																		
D12	D12	Junction	FROM	131+94.69	25.39	0.59	0.83	16.45	9.28	4.55	3.79	0.73	26.18	52.22	52.22	0.30	Circ	30"	Conc	1	n/a	2.50	0.012	1036.50	1036.35	0.16	0.30	1041.71	1041.46
	D11	Junction	TO	131+42.49	24.34			16.45			4.02	0.70																1037.23	1037.05
			ON	AMRN							0.63																		
D13	D13	Junction	FROM	133+70.45	25.50	0.39	0.84	15.65	9.51	3.08	4.24	0.51	35.89	173.35	173.35	0.56	Circ	30"	Conc	1	n/a	2.50	0.012	1037.48	1036.50	0.98	0.56	1042.62	1041.71
	D12	Junction	TO	131+94.69	25.39			15.77			4.24	0.51																1038.06	1037.02
			ON	AMRN							0.63																		
D14	D14	Junction	FROM	133+94.33	25.50	0.39	0.84	15.65	9.51	3.08	3.36	0.61	25.71	21.43	23.93	0.29	Circ	30"	Conc	1	n/a	2.50	0.012	1037.55	1037.48	0.07	0.29	1042.74	1042.62
	D13	Junction	TO	133+70.45	25.50			15.65			3.61	0.58																1038.15	1038.06
			ON	AMRN							0.76																		
D15	D15	Junction	FROM	135+70.45	25.50	0.19	0.86	5.00	14.88	2.38	4.06	0.48	19.84	168.29	170.79	0.57	Circ	24"	Conc	1	n/a	2.00	0.012	1039.02	1038.05	0.97	0.57	1043.65	1042.74
	D14	Junction	TO	133+94.33	25.50			14.95			4.06	0.48																1039.55	1038.53
			ON	AMRN							0.76																		
D16	D16	Junction	FROM	135+94.33	25.50	0.19	0.86	5.00	14.88	2.38	3.21	0.57	14.44	23.08	23.08	0.30	Circ	24"	Conc	1	n/a	2.00	0.012	1039.09	1039.02	0.07	0.30	1043.78	1043.65
	D15	Junction	TO	135+70.45	25.50			14.83			3.51	0.54																1039.65	1039.55
			ON	AMRN							0.00																		
D17	D17	Junction	FROM	137+39.04	25.50	0.00	0.00	0.00	0.00	0.00	0.59	0.02	19.95	137.69	139.69	0.57	Circ	24"	Conc	1	n/a	2.00	0.012	1039.89	1039.09	0.80	0.57	1044.53	1043.78
	D16	Junction	TO	135+94.33	25.50			10.86			0.59	0.02																1040.01	1039.11
			ON	AMRN							0.00																		
D18	D18	Junction	FROM	137+94.33	25.50	0.00	0.00	0.00	0.00	0.00	0.52	0.02	8.26	51.43	53.43	0.45	Circ	18"	Conc	1	n/a	1.50	0.012	1040.63	1040.39	0.24	0.45	1044.81	1044.53
	D17	Junction	TO	137+39.04	25.50			9.14			0.52	0.02																1040.72	1040.41
			ON	AMRN							0.00																		
D19	D19	Junction	FROM	139+43.50	25.50	0.00	0.00	0.00	0.00	0.00	0.49	0.02	9.15	146.93	146.93	0.56	Circ	18"	Conc	1	n/a	1.50	0.012	1041.45	1040.63	0.82	0.56	1045.59	1044.81
	D18	Junction	TO	137+94.33	25.50			4.17			0.49	0.02																1041.54	1040.65
			ON	AMRN							0.00																		
D20	D20	Junction	FROM	139+94.50	25.50	0.00	0.00	0.00	0.00	0.00	0.45	0.01	10.86	51.00	51.00	0.79	Circ	18"	Conc	1	n/a	1.50	0.012	1041.85	1041.45	0.40	0.78	1045.85	1045.59
	D19	Junction	TO	139+43.50	25.50			0.00			0.45	0.01																1041.98	1041.46

NOTES:
1. LINK DATA WAS CALCULATED IN GEOPAK DRAINAGE.

NUMBER	DATE	REVISION	APPROVED

STATE OF TEXAS
RILEY W. SLADEK
108887
LICENSED
PROFESSIONAL ENGINEER
10/4/2016

LJA Engineering, Inc.
FRN - F-1386

Binkley & Barfield, Inc
consulting engineers
Texas Registration Number F-257

CEDAR PARK

ANDERSON MILL RD
HYDRAULIC DATA
LINKS

DESIGN BY: RS
DRAWN BY: CM
CHECKED BY: RS
APPROVED BY: DG
PROJECT NO:
DATE: 10/4/2016

SHEET: 10 OF 16
PAGE: 161

10/4/2016
3:12:25 PM
I:\1841\1402\CADD\SHEETS\NORTH\06-Drainage Details\NAMR*HYDR*DATA*LINKS100*02.dgn

100 YEAR - CONVEYANCE CONFIGURATION DATA

PIPE ID	STRUCTURE ID	STRUCTURE TYPE	LOCATION CHAIN/STATION/OFFSET			CUML AREA (acre)	CUML C	Tc USED ACTUAL Tc (min)	RAIN INT (in/hr)	TOTAL Q (cfs)	FLOW VEL V full / V actual (ft/s)	FLOW DEPTH (ft)	FULL PIPE CAP. (cfs)	ACTUAL PIPE LENGTH (ft)	HYD PIPE LENGTH (ft)	SLOPE (%)	PIPE SHAPE	PIPE SIZE	PIPE MATL	PIPE #	PIPE SPAN (FT)	PIPE RISE (FT)	N VALUE	PIPE INVERT ELEVATION UPPER END	PIPE INVERT ELEVATION LOWER END	FALL (ft)	FR SLOPE (%)	TOP OF GRATE/MH HGL ELEVATION UPPER END	TOP OF GRATE/MH HGL ELEVATION LOWER END
			ON	AMRN							0.00																		
D24	D24	Junction	FROM	122+00.00	2.50	0.00	0.00	0.00	0.00	0.00	0.40	0.02	6.70	20.97	22.47	0.30	Circ	18"	Conc	1	n/a	1.50	0.012	1021.57	1021.50	0.07	0.30	1026.34	1026.71
	D02	Junction	TO	121+86.18	19.50			18.43			0.26	0.03																1021.66	1021.53
			ON	AMRN							0.00																		
D26	D26	Junction	FROM	124+29.98	-5.00	0.00	0.00	0.00	0.00	0.00	0.32	0.02	6.70	34.63	34.63	0.30	Circ	18"	Conc	1	n/a	1.50	0.012	1026.31	1026.21	0.10	0.30	1030.74	1030.40
	D03	Junction	TO	124+05.50	19.50			18.36			0.32	0.02																1026.44	1026.22
			ON	AMRN							0.91																		
D27	D27	Curb	FROM	124+50.00	29.00	0.13	0.86	5.00	14.88	1.60	2.96	0.52	6.70	7.78	11.78	0.30	Circ	18"	Conc	1	n/a	1.50	0.012	1027.01	1026.98	0.04	0.30	1031.54	1031.01
	D04	Junction	TO	124+44.50	19.50			18.14			3.34	0.47																1027.65	1027.45
			ON	AMRN							0.00																		
D28	D28	Junction	FROM	125+80.02	-5.00	0.00	0.00	0.00	0.00	0.00	0.32	0.02	6.70	34.66	34.66	0.30	Circ	18"	Conc	1	n/a	1.50	0.012	1029.07	1028.96	0.10	0.30	1033.74	1032.96
	D05	Junction	TO	125+55.50	19.50			18.06			0.32	0.02																1029.20	1028.98
			ON	AMRN							1.21																		
D29	D29	Curb	FROM	126+00.00	29.00	0.17	0.86	5.00	14.88	2.15	3.21	0.61	6.70	7.78	11.78	0.30	Circ	18"	Conc	1	n/a	1.50	0.012	1029.67	1029.63	0.04	0.30	1034.16	1033.74
	D06	Junction	TO	125+94.50	19.50			17.76			3.63	0.55																1030.44	1030.19
			ON	AMRN							0.00																		
D30	D30	Junction	FROM	127+80.00	-5.00	0.00	0.00	0.00	0.00	0.00	0.32	0.02	6.70	34.65	34.65	0.30	Circ	18"	Conc	1	n/a	1.50	0.012	1033.32	1033.22	0.10	0.30	1037.74	1036.96
	D07	Junction	TO	127+55.50	19.50			17.66			0.32	0.02																1033.45	1033.23
			ON	AMRN							1.25																		
D31	D31	Curb	FROM	128+00.00	29.00	0.18	0.84	5.00	14.88	2.20	3.22	0.62	6.70	7.78	11.78	0.30	Circ	18"	Conc	1	n/a	1.50	0.012	1033.66	1033.62	0.04	0.30	1038.15	1037.74
	D08	Junction	TO	127+94.50	19.50			17.32			3.65	0.56																1034.44	1034.18
			ON	AMRN							0.00																		
D32	D32	Junction	FROM	129+77.17	-5.00	0.00	0.00	0.00	0.00	0.00	0.32	0.02	6.70	36.80	36.80	0.30	Circ	18"	Conc	1	n/a	1.50	0.012	1036.24	1036.13	0.11	0.30	1040.73	1040.13
	D09	Junction	TO	129+50.64	20.50			17.18			0.32	0.02																1036.37	1036.14
			ON	AMRN							1.37																		
D33	D33	Curb	FROM	130+00.00	30.99	0.20	0.80	5.00	14.88	2.41	3.30	0.65	6.70	7.72	11.72	0.30	Circ	18"	Conc	1	n/a	1.50	0.012	1036.43	1036.40	0.04	0.30	1040.93	1040.57
	D10	Junction	TO	129+94.69	21.39			16.68			3.76	0.59																1037.26	1036.99
			ON	AMRN							0.00																		
D34	D34	Junction	FROM	131+73.03	-5.00	0.00	0.00	0.00	0.00	0.00	0.32	0.02	6.70	42.35	42.35	0.30	Circ	18"	Conc	1	n/a	1.50	0.012	1037.47	1037.35	0.13	0.30	1042.00	1041.46
	D11	Junction	TO	131+42.49	24.34			16.45			0.32	0.02																1037.60	1037.36
			ON	AMRN							1.40																		
D35	D35	Curb	FROM	132+00.00	34.99	0.21	0.81	5.00	14.88	2.48	3.31	0.66	6.70	7.72	11.72	0.30	Circ	18"	Conc	1	n/a	1.50	0.012	1037.54	1037.50	0.04	0.30	1042.04	1041.71
	D12	Junction	TO	131+94.69	25.39			15.77			3.79	0.60																1038.38	1038.10
			ON	AMRN							0.00																		
D36	D36	Junction	FROM	134+00.00	-2.50	0.00	0.00	0.00	0.00	0.00	0.32	0.02	6.70	40.38	40.38	0.30	Circ	18"	Conc	1	n/a	1.50	0.012	1038.60	1038.48	0.12	0.30	1043.23	1042.62
	D13	Junction	TO	133+70.45	25.50			15.65			0.32	0.02																1038.73	1038.50
			ON	AMRN							1.37																		
D37	D37	Curb	FROM	134+00.00	35.00	0.20	0.82	5.00	14.88	2.43	3.31	0.65	6.70	5.25	11.75	0.30	Circ	18"	Conc	1	n/a	1.50	0.012	1038.58	1038.55	0.04	0.30	1043.08	1042.74
	D14	Junction	TO	133+94.33	25.50			14.95			3.77	0.59																1039.42	1039.14
			ON	AMRN							0.00																		
D38	D38	Junction	FROM	136+00.00	-2.50	0.00	0.00	0.00	0.00	0.00	0.32	0.02	6.70	40.38	40.38	0.30	Circ	18"	Conc	1	n/a	1.50	0.012	1039.64	1039.52	0.12	0.30	1044.27	1043.65
	D15	Junction	TO	135+70.45	25.50			14.83			0.32	0.02																1039.77	1039.53
			ON	AMRN							1.35																		
D39	D39	Curb	FROM	136+00.00	35.00	0.19	0.86	5.00	14.88	2.38	3.32	0.64	6.70	7.75	11.75	0.30	Circ	18"	Conc	1	n/a	1.50	0.012	1039.62	1039.59	0.04	0.31	1044.12	1043.78
	D16	Junction	TO	135+94.33	25.50			10.86			3.74	0.58																1040.44	1040.17
			ON	AMRN							0.00																		
D40	D40	Junction	FROM	137+81.00	-11.94	0.00	0.00	0.00	0.00	0.00	0.32	0.02	6.70	53.94	55.94	0.30	Circ	18"	Conc	1	n/a	1.50	0.012	1040.55	1040.39	0.17	0.30	1045.01	1044.53
	D17	Junction	TO	137+39.04	25.50			9.14			0.32	0.02																1040.69	1040.40
			ON	AMRN							0.00																		
D41	D41	Junction	FROM	138+00.00	31.00	0.00	0.00	0.00	0.00	0.00	0.32	0.02	6.70	7.75	7.75	0.30	Circ	18"	Conc	1	n/a	1.50	0.012	1040.65	1040.63	0.02	0.30	1044.73	1044.81
	D18	Junction	TO	137+94.33	25.50			4.17			0.03	0.07																1040.78	1040.70
			ON	AMRN							0.00																		
D42	D42	Junction	FROM	140+00.00	-31.00	0.00	0.00	0.00	0.00	0.00	0.32	0.02	6.70	79.90	79.90	0.30	Circ	18"	Conc	1	n/a	1.50	0.012	1041.69	1041.45	0.24	0.30	1045.77	1045.59
	D19	Junction	TO	139+43.50	25.50			0.00			0.32	0.02																1041.82	1041.46

NOTES:
1. LINK DATA WAS CALCULATED IN GEOPAK DRAINAGE.

NUMBER	DATE	REVISION	APPROVED

STATE OF TEXAS
RILEY W. SLADEK
108887
LICENSED PROFESSIONAL ENGINEER
10/4/2016

LJA Engineering, Inc.
FRN - F-1386

Binkley & Barfield, Inc
consulting engineers
Texas Registration Number F-257

CEDAR PARK

ANDERSON MILL RD
HYDRAULIC DATA
LINKS

DESIGN BY: RS
DRAWN BY: CM
CHECKED BY: RS
APPROVED BY: DG
PROJECT NO:
DATE: 10/4/2016

SHEET: 11 OF 16
PAGE: 162

10/4/2016
3:12:28 PM
I:\1841\1402\CADD\SHEETS\NORTH\06-Drainage Details\NAMR*HYDR*DATA*LINKS100*03.dgn

100 YEAR - CONVEYANCE CONFIGURATION DATA

PIPE ID	STRUCTURE ID	STRUCTURE TYPE	LOCATION CHAIN/STATION/OFFSET			CUML AREA (acre)	CUML C	Tc USED ACTUAL Tc (min)	RAIN INT (in/hr)	TOTAL Q (cfs)	FLOW VEL V full / V actual (ft/s)	FLOW DEPTH (ft)	FULL PIPE CAP. (cfs)	ACTUAL PIPE LENGTH (ft)	HYD PIPE LENGTH (ft)	SLOPE (%)	PIPE SHAPE	PIPE SIZE	PIPE MATL	PIPE #	PIPE SPAN (FT)	PIPE RISE (FT)	N VALUE	PIPE INVERT ELEVATION UPPER END	PIPE INVERT ELEVATION LOWER END	FALL (ft)	FR SLOPE (%)	TOP OF GRATE/MH HGL ELEVATION UPPER END	TOP OF GRATE/MH HGL ELEVATION LOWER END
			ON	AMRN							0.00																		
D51	D51	Junction	FROM	122+00.00	-5.00	0.00	0.00	0.00	0.00	0.00	0.32	0.02	6.70	6.00	7.50	0.30	Circ	18"	Conc	1	n/a	1.50	0.012	1021.59	1021.57	0.02	0.30	1026.05	1026.34
	D24	Junction	TO	122+00.00	2.50			0.00			0.03	0.07																1021.72	1021.64
			ON	AMRN							7.93																		
E04	E04	Junction	FROM	144+15.50	-37.50	8.98	0.60	13.05	10.38	56.08	12.87	1.78	91.72	168.89	171.89	1.39	Circ	36"	Conc	1	n/a	3.00	0.012	1044.11	1041.72	2.39	1.39	1049.61	1046.87
	EOUT	Outlet	TO	142+44.50	-37.50			13.05			12.48	1.82																1046.54	1043.54
			ON	AMRN							8.95																		
E05	E05	Junction	FROM	144+54.50	-37.50	7.00	0.60	12.73	10.50	43.93	12.25	1.71	57.95	36.94	39.94	1.47	Circ	30"	Conc	1	n/a	2.50	0.012	1045.20	1044.61	0.59	1.47	1050.25	1049.61
	E04	Junction	TO	144+15.50	-37.50			13.00			11.10	1.88																1047.41	1046.49
			ON	AMRN							8.95																		
E06	E06	Junction	FROM	146+58.69	-34.31	7.00	0.60	12.73	10.50	43.93	12.86	1.64	61.80	204.22	204.22	1.67	Circ	30"	Conc	1	n/a	2.50	0.012	1048.61	1045.20	3.41	1.66	1053.61	1050.25
	E05	Junction	TO	144+54.50	-37.50			12.73			12.69	1.66																1050.82	1046.86
			ON	AMRN							5.73																		
E07	E07	Junction	FROM	146+93.51	-29.90	4.17	0.63	12.36	10.64	28.13	11.39	1.26	59.86	35.09	35.09	1.57	Circ	30"	Conc	1	n/a	2.50	0.012	1049.17	1048.61	0.55	1.58	1054.27	1053.61
	E06	Junction	TO	146+58.69	-34.31			12.68			9.77	1.42																1050.97	1050.04
			ON	AMRN							5.73																		
E08	E08	Junction	FROM	149+22.00	-25.50	4.17	0.63	12.36	10.64	28.13	11.72	1.23	62.35	228.54	228.54	1.70	Circ	30"	Conc	1	n/a	2.50	0.012	1053.05	1049.17	3.89	1.70	1058.05	1054.27
	E07	Junction	TO	146+93.51	-29.90			12.36			11.61	1.24																1054.86	1050.40
			ON	AMRN							5.30																		
E09	E09	Junction	FROM	149+44.50	-25.50	3.90	0.62	12.11	10.74	26.01	9.48	1.37	48.50	20.81	23.31	1.03	Circ	30"	Conc	1	n/a	2.50	0.012	1053.29	1053.05	0.24	1.02	1058.42	1058.05
	E08	Junction	TO	149+22.00	-25.50			12.32			8.47	1.50																1055.03	1054.55
			ON	AMRN							8.28																		
E10	E10	Junction	FROM	150+90.43	-25.50	3.90	0.62	12.11	10.74	26.00	11.43	1.36	34.70	141.03	143.53	1.73	Circ	24"	Conc	1	n/a	2.00	0.012	1056.28	1053.79	2.49	1.73	1060.78	1058.42
	E09	Junction	TO	149+44.50	-25.50			12.11			11.24	1.38																1058.07	1055.18
			ON	AMRN							1.34																		
E11	E11	Junction	FROM	151+94.33	-25.50	0.35	0.81	5.00	14.88	4.22	6.82	0.50	32.87	98.42	100.42	1.55	Circ	24"	Conc	1	n/a	2.00	0.012	1057.84	1056.28	1.56	1.55	1062.46	1060.78
	E10	Junction	TO	150+90.43	-25.50			2.71			6.79	0.50																1058.56	1056.78
			ON	AMRN							2.39																		
E12	E12	Junction	FROM	154+72.00	-25.50	0.35	0.81	5.00	14.88	4.22	7.23	0.55	15.93	270.71	272.71	1.69	Circ	18"	Conc	1	n/a	1.50	0.012	1062.96	1058.34	4.62	1.70	1066.96	1062.46
	E11	Junction	TO	151+94.33	-25.50			2.08			7.21	0.55																1063.75	1058.89
			ON	AMRN							0.00																		
E13	E13	Junction	FROM	154+94.50	-25.50	0.00	0.00	0.00	0.00	0.00	0.50	0.01	12.64	22.50	22.50	1.07	Circ	18"	Conc	1	n/a	1.50	0.012	1063.20	1062.96	0.24	1.07	1067.32	1066.96
	E12	Junction	TO	154+72.00	-25.50			0.41			0.00	0.79																1063.75	1063.75
			ON	AMRN							5.16																		
E16	E16	Curb	FROM	144+60.00	7.00	1.98	0.62	7.10	13.31	16.22	6.31	1.53	18.64	59.93	62.93	0.50	Circ	24"	Conc	1	n/a	2.00	0.012	1045.43	1045.11	0.31	0.51	1051.72	1049.61
	E04	Junction	TO	144+15.50	-37.50			13.00			6.64	1.45																1046.95	1046.57
			ON	AMRN							0.00																		
E17	E17	Junction	FROM	144+60.00	-43.00	0.00	0.00	0.00	0.00	0.00	0.32	0.02	6.70	7.78	7.78	0.30	Circ	18"	Conc	1	n/a	1.50	0.012	1046.22	1046.20	0.02	0.30	1050.22	1050.25
	E05	Junction	TO	144+54.50	-37.50			12.73			0.00	1.21																1047.41	1047.41
			ON	AMRN							5.94																		
E18	E18	Curb	FROM	147+00.00	7.00	2.83	0.54	9.15	12.10	18.65	12.32	0.97	42.18	58.42	58.42	2.56	Circ	24"	Conc	1	n/a	2.00	0.012	1050.61	1049.11	1.50	2.56	1055.61	1053.61
	E06	Junction	TO	146+58.69	-34.31			12.68			11.10	1.05																1052.16	1050.17
			ON	AMRN							0.00																		
E19	E19	Junction	FROM	146+99.56	-34.74	0.00	0.00	0.00	0.00	0.00	0.32	0.02	6.70	7.74	7.74	0.30	Circ	18"	Conc	1	n/a	1.50	0.012	1050.19	1050.17	0.02	0.30	1054.27	1054.27
	E07	Junction	TO	146+93.51	-29.90			12.36			0.00	0.81																1050.97	1050.97
			ON	AMRN							1.87																		
E20	E20	Curb	FROM	149+50.00	6.50	0.27	0.83	5.00	14.88	3.30	7.90	0.43	19.87	39.60	41.60	2.64	Circ	18"	Conc	1	n/a	1.50	0.012	1055.15	1054.05	1.10	2.63	1059.57	1058.05
	E08	Junction	TO	149+22.00	-25.50			12.32			7.56	0.44																1056.16	1054.50
			ON	AMRN							0.00																		
E21	E21	Junction	FROM	149+50.00	-31.00	0.00	0.00	0.00	0.00	0.00	0.32	0.02	6.70	5.28	7.78	0.30	Circ	18"	Conc	1	n/a	1.50	0.012	1054.32	1054.29	0.02	0.30	1058.40	1058.42
	E09	Junction	TO	149+44.50	-25.50			12.11			0.00	0.74																1055.03	1055.03
			ON	AMRN							13.02																		
E22	E22	Curb	FROM	151+20.00	6.50	3.55	0.60	12.06	10.76	23.00	13.79	1.34	23.30	40.40	42.40	3.62	Circ	18"	Conc	1	n/a	1.50	0.012	1058.32	1056.78	1.54	3.62	1062.32	1060.78
	E10	Junction	TO	150+90.43	-25.50			2.71			13.11	1.46																1059.80	1058.24

NOTES:
1. LINK DATA WAS CALCULATED IN GEOPAK DRAINAGE.

NUMBER	DATE	REVISION	APPROVED

STATE OF TEXAS
RILEY W. SLADEK
108887
LICENSED
PROFESSIONAL ENGINEER
10/4/2016

LJA Engineering, Inc.
FRN - F-1386

Binkley & Barfield, Inc
consulting engineers
Texas Registration Number F-257

CEDAR PARK

ANDERSON MILL RD
HYDRAULIC DATA
LINKS

DESIGN BY: RS
DRAWN BY: CM
CHECKED BY: RS
APPROVED BY: DG
PROJECT NO:
DATE: 10/4/2016

SHEET: 12 OF 16
PAGE: 163

10/4/2016
3:12:31 PM
I:\1841\1402\CADD\SHEETS\NORTH\06-Drainage Details\NAMR*HYDR*DATA*LINKS100*04.dgn

100 YEAR - CONVEYANCE CONFIGURATION DATA

PIPE ID	STRUCTURE ID	STRUCTURE TYPE	LOCATION CHAIN/STATION/OFFSET			CUML AREA (acre)	CUML C	Tc USED ACTUAL Tc (min)	RAIN INT (in/hr)	TOTAL Q (cfs)	FLOW VEL V full / V actual (ft/s)	FLOW DEPTH (ft)	FULL PIPE CAP. (cfs)	ACTUAL PIPE LENGTH (ft)	HYD PIPE LENGTH (ft)	SLOPE (%)	PIPE SHAPE	PIPE SIZE	PIPE MATL	PIPE #	PIPE SPAN (FT)	PIPE RISE (FT)	N VALUE	PIPE INVERT ELEVATION UPPER END	PIPE INVERT ELEVATION LOWER END	FALL (ft)	FR SLOPE (%)	TOP OF GRATE/MH HGL ELEVATION UPPER END	TOP OF GRATE/MH HGL ELEVATION LOWER END
			ON	AMRN							0.00																		
E23	E23	Junction	FROM	152+00.00	-31.00	0.00	0.00	0.00	0.00	0.00	0.32	0.02	6.70	5.75	7.75	0.30	Circ	18"	Conc	1	n/a	1.50	0.012	1058.36	1058.34	0.02	0.30	1062.44	1062.46
	E11	Junction	TO	151+94.33	-25.50			2.08			0.01	0.22																1058.56	1058.56
			ON	AMRN							2.39																		
E24	E24	Curb	FROM	155+00.00	6.50	0.35	0.81	5.00	14.88	4.22	8.45	0.49	19.83	39.60	41.60	2.62	Circ	18"	Conc	1	n/a	1.50	0.012	1064.05	1062.96	1.09	2.62	1068.47	1066.96
	E12	Junction	TO	154+72.00	-25.50			0.41			7.97	0.51																1065.22	1063.47
			ON	AMRN							0.00																		
E25	E25	Junction	FROM	155+00.00	-31.00	0.00	0.00	0.00	0.00	0.00	0.32	0.02	6.70	7.78	7.78	0.30	Circ	18"	Conc	1	n/a	1.50	0.012	1063.22	1063.20	0.02	0.30	1067.30	1067.32
	E13	Junction	TO	154+94.50	-25.50			0.00			0.00	0.55																1063.75	1063.75
			ON	AMRN							4.45																		
E26	E26	Grate	FROM	144+60.00	55.00	1.75	0.60	7.00	13.37	13.97	8.05	1.08	26.36	42.00	48.00	1.00	Circ	24"	Conc	1	n/a	2.00	0.012	1045.91	1045.43	0.48	1.00	1050.00	1051.72
	E16	Curb	TO	144+60.00	7.00			7.00			7.73	1.12																1048.05	1046.55
			ON	AMRN							5.16																		
E27	E27	Grate	FROM	147+00.00	55.00	2.57	0.52	9.00	12.18	16.22	5.30	2.00	14.44	42.00	48.00	0.30	Circ	24"	Conc	1	n/a	2.00	0.012	1050.75	1050.61	0.14	0.38	1054.50	1055.61
	E18	Curb	TO	147+00.00	7.00			9.00			6.19	1.55																1053.16	1052.16
			ON	AMRN							11.44																		
E28	E28	Grate	FROM	151+20.00	55.00	3.24	0.58	12.00	10.79	20.22	15.04	1.07	25.45	46.50	50.50	4.32	Circ	18"	Conc	1	n/a	1.50	0.012	1059.00	1058.32	0.68	4.32	1062.20	1062.32
	E22	Curb	TO	151+20.00	6.50			12.00			13.79	1.16																1061.20	1059.48
			ON	AMRN							4.99																		
F01	F01	Junction	FROM	164+40.00	-14.00	5.05	0.68	13.32	10.28	35.29	6.64	2.11	45.06	63.50	66.00	0.34	Circ	36"	Conc	1	n/a	3.00	0.012	1054.72	1054.50	0.22	0.34	1065.65	1058.00
	FOUT	Outlet	TO	164+40.00	-80.00			13.32			7.34	1.93																1056.80	1056.43
			ON	AMRN							8.06																		
F02	F02	Junction	FROM	163+44.34	-14.00	3.63	0.67	13.13	10.35	25.33	8.27	2.00	22.83	93.16	95.66	0.75	Circ	24"	Conc	1	n/a	2.00	0.012	1060.02	1059.30	0.72	0.92	1065.13	1065.65
	F01	Junction	TO	164+40.00	-14.00			13.13			8.61	1.77																1062.18	1061.07
			ON	AMRN							3.96																		
F03	F03	Junction	FROM	163+40.32	-14.00	1.15	0.76	5.68	14.33	12.45	6.92	1.11	22.50	4.02	4.02	0.73	Circ	24"	Conc	1	n/a	2.00	0.012	1060.05	1060.02	0.03	0.72	1065.12	1065.13
	F02	Junction	TO	163+44.34	-14.00			5.98			3.96	2.00																1062.19	1062.18
			ON	AMRN							3.96																		
F05	F05	Junction	FROM	162+11.53	-14.00	1.15	0.76	5.68	14.33	12.45	7.03	1.10	22.83	126.49	128.49	0.75	Circ	24"	Conc	1	n/a	2.00	0.012	1061.01	1060.05	0.96	0.75	1065.88	1065.12
	F03	Junction	TO	163+40.32	-14.00			5.68			7.01	1.10																1062.28	1061.15
			ON	AMRN							3.87																		
F06	F06	Junction	FROM	160+47.09	-14.00	0.65	0.71	5.06	14.83	6.83	7.83	0.74	14.99	159.96	161.96	1.50	Circ	18"	Conc	1	n/a	1.50	0.012	1063.94	1061.51	2.43	1.49	1069.09	1065.88
	F05	Junction	TO	162+11.53	-14.00			5.33			7.83	0.74																1064.95	1062.25
			ON	AMRN							3.87																		
F07	F07	Junction	FROM	159+86.50	-14.00	0.65	0.71	5.06	14.83	6.83	5.14	1.06	8.65	60.45	60.45	0.50	Circ	18"	Conc	1	n/a	1.50	0.012	1064.24	1063.94	0.30	0.51	1070.46	1069.09
	F06	Junction	TO	160+47.09	-14.00			5.14			5.39	1.01																1065.30	1064.95
			ON	AMRN							3.87																		
F08	F08	Curb	FROM	159+70.00	6.50	0.65	0.71	5.06	14.83	6.83	5.14	1.06	8.66	23.33	25.33	0.50	Circ	18"	Conc	1	n/a	1.50	0.012	1064.37	1064.24	0.13	0.51	1071.70	1070.46
	F07	Junction	TO	159+86.50	-14.00			5.06			5.14	1.06																1065.43	1065.30
			ON	AMRN							2.99																		
F09	F09	Grate	FROM	159+70.00	42.00	0.54	0.66	5.00	14.88	5.29	11.37	0.46	27.37	34.42	37.50	5.00	Circ	18"	Conc	1	n/a	1.50	0.012	1066.72	1064.84	1.88	5.00	1071.00	1071.70
	F08	Curb	TO	159+70.00	6.50			5.00			10.31	0.50																1068.06	1065.34
			ON	AMRN							0.00																		
F10	F10	Junction	FROM	160+30.00	-31.00	0.00	0.00	0.00	0.00	0.00	0.49	0.01	12.24	23.98	23.98	1.00	Circ	18"	Conc	1	n/a	1.50	0.012	1064.18	1063.94	0.24	1.00	1069.29	1069.09
	F06	Junction	TO	160+47.09	-14.00			5.14			0.00	1.01																1064.95	1064.95
			ON	AMRN							0.00																		
F11	F11	Junction	FROM	161+90.00	-31.00	0.00	0.00	0.00	0.00	0.00	0.51	0.01	13.24	25.07	27.07	1.17	Circ	18"	Conc	1	n/a	1.50	0.012	1061.83	1061.51	0.32	1.18	1065.83	1065.88
	F05	Junction	TO	162+11.53	-14.00			5.33			0.00	0.77																1062.28	1062.28
			ON	AMRN							3.44																		
F12	F12	Curb	FROM	161+90.00	7.00	0.50	0.82	5.00	14.88	6.08	9.96	0.57	21.63	28.02	30.02	3.12	Circ	18"	Conc	1	n/a	1.50	0.012	1062.59	1061.65	0.94	3.12	1067.09	1065.88
	F05	Junction	TO	162+11.53	-14.00			5.33			8.78	0.62																1064.07	1062.27
			ON	AMRN							0.00																		
F13	F13	Junction	FROM	163+23.34	-31.00	0.00	0.00	0.00	0.00	0.00	0.54	0.01	14.30	24.02	24.02	1.36	Circ	18"	Conc	1	n/a	1.50	0.012	1060.88	1060.55	0.33	1.37	1064.88	1065.12
	F03	Junction	TO	163+40.32	-14.00			5.68			0.00	1.50																1062.19	1062.19

NOTES:
1. LINK DATA WAS CALCULATED IN GEOPAK DRAINAGE.

NUMBER	DATE	REVISION	APPROVED

STATE OF TEXAS
RILEY W. SLADEK
108887
LICENSED PROFESSIONAL ENGINEER
10/4/2016

LJA Engineering, Inc.
FRN - F-1386

Binkley & Barfield, Inc
consulting engineers
Texas Registration Number F-257

CEDAR PARK

ANDERSON MILL RD
HYDRAULIC DATA
LINKS

DESIGN BY: RS
DRAWN BY: CM
CHECKED BY: RS
APPROVED BY: DG
PROJECT NO:
DATE: 10/4/2016

SHEET: 13 OF 16
PAGE: 164

10/4/2016
3:12:35 PM
I:\1841\1402\CADD\SHEETS\NORTH\06-Drainage Details\NAMR*HYDR*DATA*LINKS100*05.dgn

100 YEAR - CONVEYANCE CONFIGURATION DATA

PIPE ID	STRUCTURE ID	STRUCTURE TYPE	LOCATION CHAIN/STATION/OFFSET			CUML AREA (acre)	CUML C	Tc USED ACTUAL Tc (min)	RAIN INT (in/hr)	TOTAL Q (cfs)	FLOW VEL V full / V actual (ft/s)	FLOW DEPTH (ft)	FULL PIPE CAP. (cfs)	ACTUAL PIPE LENGTH (ft)	HYD PIPE LENGTH (ft)	SLOPE (%)	PIPE SHAPE	PIPE SIZE	PIPE MATL	PIPE #	PIPE SPAN (FT)	PIPE RISE (FT)	N VALUE	PIPE INVERT ELEVATION UPPER END	PIPE INVERT ELEVATION LOWER END	FALL (ft)	FR SLOPE (%)	TOP OF GRATE/MH HGL ELEVATION UPPER END	TOP OF GRATE/MH HGL ELEVATION LOWER END
			ON	AMRN							5.21																		
F14	F14	Curb	FROM	163+23.34	7.00	2.48	0.64	13.07	10.37	16.36	8.35	1.20	26.36	29.70	29.70	1.00	Circ	24"	Conc	1	n/a	2.00	0.012	1060.50	1060.20	0.30	1.00	1066.14	1065.13
	F02	Junction	TO	163+44.34	-14.00			5.98			5.22	1.98																1062.22	1062.18
			ON	AMRN							4.58																		
F15	F15	Grate	FROM	163+23.34	41.50	2.26	0.61	13.00	10.40	14.38	8.12	1.10	26.37	29.42	34.50	1.00	Circ	24"	Conc	1	n/a	2.00	0.012	1060.85	1060.50	0.35	1.00	1065.10	1066.14
	F14	Curb	TO	163+23.34	7.00			13.00			7.65	1.16																1063.03	1061.66
			ON	AMRN							2.12																		
F16	F16	Junction	FROM	166+73.00	-14.00	0.55	0.81	5.00	14.88	6.66	4.26	1.00	14.44	110.42	112.42	0.30	Circ	24"	Conc	1	n/a	2.00	0.012	1056.42	1056.08	0.34	0.30	1063.51	1065.15
	F21	Junction	TO	165+60.58	-14.00			1.55			2.47	1.60																1057.75	1057.69
			ON	AMRN							1.64																		
F17	F17	Junction	FROM	167+61.00	-14.00	0.23	0.86	5.00	14.88	2.90	3.48	0.72	6.70	86.00	88.00	0.30	Circ	18"	Conc	1	n/a	1.50	0.012	1057.19	1056.92	0.26	0.30	1061.48	1063.51
	F16	Junction	TO	166+73.00	-14.00			1.12			2.90	0.83																1057.91	1057.75
			ON	AMRN							1.64																		
F18	F18	Curb	FROM	167+78.00	-35.00	0.23	0.86	5.00	14.88	2.90	3.48	0.72	6.70	24.04	26.04	0.30	Circ	18"	Conc	1	n/a	1.50	0.012	1057.26	1057.19	0.08	0.30	1061.26	1061.48
	F17	Junction	TO	167+61.00	-14.00			1.00			3.40	0.73																1058.19	1057.91
			ON	AMRN							2.13																		
F19	F19	Curb	FROM	167+30.00	47.00	0.33	0.78	5.00	14.88	3.77	5.58	0.61	11.62	79.21	85.21	0.90	Circ	18"	Conc	1	n/a	1.50	0.012	1057.67	1056.90	0.77	0.91	1062.17	1063.51
	F16	Junction	TO	166+73.00	-14.00			1.12			5.55	0.61																1058.77	1057.52
			ON	AMRN							4.29																		
F20	F20	Grate	FROM	166+15.00	41.50	0.87	0.62	6.00	14.08	7.58	12.56	0.56	27.37	76.96	78.04	5.00	Circ	18"	Conc	1	n/a	1.50	0.012	1060.47	1056.57	3.90	5.00	1063.63	1065.15
	F21	Junction	TO	165+60.58	-14.00			1.55			12.14	0.58																1062.21	1057.14
			ON	AMRN							4.39																		
F21	F21	Junction	FROM	165+60.58	-14.00	1.42	0.69	6.10	14.00	13.81	4.85	1.70	14.44	118.08	120.58	0.30	Circ	24"	Conc	1	n/a	2.00	0.012	1056.08	1055.72	0.36	0.30	1065.15	1065.65
	F01	Junction	TO	164+40.00	-14.00			13.13			6.18	1.34																1057.69	1057.06
			ON	AMRN							6.49																		
G01	G01	Junction	FROM	177+54.25	61.08	3.19	0.72	15.46	9.57	31.86	6.66	2.50	28.21	71.93	74.93	0.35	Circ	30"	Conc	1	n/a	2.50	0.012	1047.76	1047.50	0.26	0.44	1052.73	1053.00
	GOUT	Outlet	TO	177+53.00	136.00			15.46			7.87	1.92																1050.02	1049.42
			ON	AMRN							5.72																		
G02	G02	Junction	FROM	177+30.67	37.50	2.53	0.74	15.37	9.60	28.06	6.30	2.13	29.64	29.11	35.11	0.38	Circ	30"	Conc	1	n/a	2.50	0.012	1047.90	1047.76	0.13	0.38	1053.58	1052.73
	G01	Junction	TO	177+54.25	61.08			15.37			6.02	2.26																1050.13	1050.02
			ON	AMRN							5.68																		
G03	G03	Junction	FROM	176+40.12	37.50	0.79	0.86	5.00	14.88	10.04	5.83	1.50	7.74	87.55	90.55	0.40	Circ	18"	Conc	1	n/a	1.50	0.012	1049.26	1048.90	0.36	0.67	1053.82	1053.58
	G02	Junction	TO	177+30.67	37.50			1.57			6.44	1.24																1050.95	1050.13
			ON	AMRN							2.48																		
G04	G04	Junction	FROM	175+05.50	37.50	0.34	0.86	5.00	14.88	4.38	4.26	0.85	7.75	134.62	134.62	0.40	Circ	18"	Conc	1	n/a	1.50	0.012	1049.80	1049.26	0.54	0.40	1054.17	1053.82
	G03	Junction	TO	176+40.12	37.50			1.04			2.48	1.50																1051.12	1050.95
			ON	AMRN							2.48																		
G05	G05	Curb	FROM	175+00.00	47.00	0.34	0.86	5.00	14.88	4.38	4.93	0.75	9.37	7.78	11.78	0.59	Circ	18"	Conc	1	n/a	1.50	0.012	1049.87	1049.80	0.07	0.58	1054.50	1054.17
	G04	Junction	TO	175+05.50	37.50			1.00			2.66	1.32																1051.13	1051.12
			ON	AMRN							3.20																		
G06	G06	Curb	FROM	176+34.62	47.00	0.45	0.85	5.00	14.88	5.66	6.31	0.76	11.90	7.78	11.78	0.95	Circ	18"	Conc	1	n/a	1.50	0.012	1049.63	1049.52	0.11	0.95	1054.13	1053.82
	G03	Junction	TO	176+40.12	37.50			1.04			3.26	1.43																1051.04	1050.95
			ON	AMRN							5.75																		
G07	G07	Junction	FROM	176+55.67	-37.50	1.30	0.64	15.06	9.70	18.08	5.90	2.00	16.14	40.31	40.31	0.37	Circ	24"	Conc	1	n/a	2.00	0.012	1048.74	1048.59	0.15	0.47	1055.26	1054.70
	G16	Junction	TO	176+84.17	-9.00			15.10			5.75	2.00																1050.97	1050.75
			ON	AMRN							5.75																		
G08	G08	Junction	FROM	176+40.12	-37.50	1.30	0.64	15.06	9.70	18.08	6.35	1.70	18.77	15.55	15.55	0.51	Circ	24"	Conc	1	n/a	2.00	0.012	1048.82	1048.74	0.08	0.51	1055.17	1055.26
	G07	Junction	TO	176+55.67	-37.50			15.06			5.75	2.00																1051.06	1050.97
			ON	AMRN							4.02																		
G09	G09	Junction	FROM	174+05.50	-37.50	0.21	0.85	5.00	14.88	12.63	5.74	1.32	17.58	234.62	234.62	0.44	Circ	24"	Conc	1	n/a	2.00	0.012	1049.86	1048.82	1.04	0.44	1055.07	1055.17
	G08	Junction	TO	176+40.12	-37.50			1.03			4.02	2.00																1051.61	1051.06
			ON	AMRN							4.02																		
G10	G10	Curb	FROM	174+00.00	-47.00	0.21	0.85	5.00	14.88	12.63	5.74	1.32	17.73	7.78	11.78	0.45	Circ	24"	Conc	1	n/a	2.00	0.012	1049.92	1049.86	0.05	0.44	1055.47	1055.07
	G09	Junction	TO	174+05.50	-37.50			1.00			4.34	1.75																1051.63	1051.61

NOTES:
1. LINK DATA WAS CALCULATED IN GEOPAK DRAINAGE.

NUMBER	DATE	REVISION	APPROVED

STATE OF TEXAS
RILEY W. SLADEK
108887
LICENSED PROFESSIONAL ENGINEER
10/4/2016

LJA Engineering, Inc.
FRN - F-1386

Binkley & Barfield, Inc
consulting engineers
Texas Registration Number F-257

CEDAR PARK

ANDERSON MILL RD
HYDRAULIC DATA
LINKS

DESIGN BY: RS
DRAWN BY: CM
CHECKED BY: RS
APPROVED BY: DG
PROJECT NO:
DATE: 10/4/2016

SHEET: 14 OF 16
PAGE: 165

10/4/2016
3:12:38 PM
I:\1841\1402\CADD\SHEETS\NORTH\06-Drainage Details\NAMR*HYDR*DATA*LINKS100*06.dgn

100 YEAR - CONVEYANCE CONFIGURATION DATA

PIPE ID	STRUCTURE ID	STRUCTURE TYPE	LOCATION CHAIN/STATION/OFFSET			CUML AREA (acre)	CUML C	Tc USED ACTUAL Tc (min)	RAIN INT (in/hr)	TOTAL Q (cfs)	FLOW VEL V full / V actual (ft/s)	FLOW DEPTH (ft)	FULL PIPE CAP. (cfs)	ACTUAL PIPE LENGTH (ft)	HYD PIPE LENGTH (ft)	SLOPE (%)	PIPE SHAPE	PIPE SIZE	PIPE MATL	PIPE #	PIPE SPAN (FT)	PIPE RISE (FT)	N VALUE	PIPE INVERT ELEVATION UPPER END	PIPE INVERT ELEVATION LOWER END	FALL (ft)	FR SLOPE (%)	TOP OF GRATE/MH HGL ELEVATION UPPER END	TOP OF GRATE/MH HGL ELEVATION LOWER END
			ON	AMRN							6.37																		
G11	G11	Junction	FROM	174+00.00	-73.00	0.00	0.00	0.00	0.00	10.00	6.53	1.00	4.72	26.00	26.00	0.32	Circ	12"	Conc	2	n/a	1.00	0.012	1051.00	1050.92	0.08	1.45	1053.00	1055.47
	G10	Curb	TO	174+00.00	-47.00			0.00			6.63	0.92																1053.27	1051.83
			ON	AMRN							3.15																		
G12	G12	Curb	FROM	176+34.62	-7.00	0.44	0.85	5.00	14.88	5.56	7.18	0.68	14.31	41.80	49.80	1.37	Circ	18"	Conc	1	n/a	1.50	0.012	1049.77	1049.09	0.68	1.36	1055.03	1054.70
	G16	Junction	TO	176+84.17	-9.00			15.10			6.97	0.69																1051.16	1049.78
			ON	AMRN							3.61																		
G13	G13	Grate	FROM	176+20.00	-54.00	1.09	0.60	15.00	9.71	6.37	8.11	0.68	16.02	24.81	26.80	1.71	Circ	18"	Conc	1	n/a	1.50	0.012	1049.78	1049.32	0.46	1.72	1054.00	1055.17
	G08	Junction	TO	176+40.12	-37.50			1.03			3.61	1.50																1051.31	1051.06
			ON	AMRN							2.91																		
G14	G14	Junction	FROM	177+41.50	-71.23	0.66	0.61	8.00	12.74	5.14	9.98	0.50	23.13	128.06	133.06	3.57	Circ	EX 18"	Conc	1	n/a	1.50	0.012	1054.75	1050.00	4.75	3.57	1058.00	1052.73
	G01	Junction	TO	177+54.25	61.08			15.37			9.95	0.50																1055.62	1050.50
			ON	AMRN							2.91																		
G15	G15	Grate	FROM	177+22.90	-108.50	0.66	0.61	8.00	12.74	5.14	3.95	1.03	6.70	37.77	41.77	0.30	Circ	18"	Conc	1	n/a	1.50	0.012	1054.88	1054.75	0.13	0.30	1058.00	1058.00
	G14	Junction	TO	177+41.50	-71.23			8.00			4.82	0.87																1056.20	1055.62
			ON	AMRN							6.89																		
G16	G16	Junction	FROM	176+84.17	-9.00	1.74	0.69	15.21	9.65	21.64	7.07	2.00	14.44	63.67	66.67	0.30	Circ	24"	Conc	1	n/a	2.00	0.012	1048.60	1048.40	0.20	0.67	1054.70	1053.58
	G02	Junction	TO	177+30.67	37.50			1.57			7.47	1.74																1050.75	1050.13
			ON	AMRN							2.31																		
J01	J01	Junction	FROM	107+10.96	-19.00	0.29	0.84	5.00	14.88	3.63	2.82	0.76	4.15	110.64	110.64	0.25	Circ	12"	Conc	2	n/a	1.00	0.012	1019.97	1019.69	0.28	0.26	1022.42	1022.85
	J04	Junction	TO	106+00.00	-18.86			2.05			2.39	0.93																1020.83	1020.62
			ON	AMRN							2.31																		
J02	J02	Curb	FROM	107+13.46	-26.50	0.29	0.84	5.00	14.88	3.63	2.82	0.76	4.15	4.30	8.30	0.25	Circ	12"	Conc	2	n/a	1.00	0.012	1019.99	1019.97	0.02	0.26	1022.77	1022.42
	J01	Junction	TO	107+10.96	-19.00			2.00			2.53	0.86																1020.86	1020.83
			ON	AMRN							2.31																		
J03	J03	Junction	FROM	105+15.00	-20.14	0.29	0.84	5.00	14.88	3.63	2.82	0.76	4.15	45.45	45.45	0.25	Circ	12"	Conc	2	n/a	1.00	0.012	1019.48	1019.37	0.11	0.26	1023.15	1023.33
	JOUT	Outlet	TO	104+69.30	-14.50			3.20			2.31	1.00																1020.46	1020.37
			ON	AMRN							2.31																		
J04	J04	Junction	FROM	106+00.00	-18.86	0.29	0.84	5.00	14.88	3.63	2.82	0.76	4.15	83.32	83.32	0.25	Circ	12"	Conc	2	n/a	1.00	0.012	1019.69	1019.48	0.21	0.26	1022.85	1023.15
	J03	Junction	TO	105+15.00	-20.14			2.70			2.32	0.98																1020.62	1020.46
			ON	AMRN							9.07																		
K01	K01	Junction	FROM	105+75.00	-27.00	18.36	0.25	82.00	3.49	16.02	9.30	1.50	11.30	104.45	104.45	0.85	Circ	EX 18"	Conc	1	n/a	1.50	0.012	1020.32	1019.43	0.89	1.71	1023.06	1023.33
	KOUT	Outlet	TO	104+68.31	-22.04			82.04			9.24	1.43																1022.97	1020.86
			ON	AMRN							9.07																		
K02	K02	Junction	FROM	105+80.00	-30.00	18.36	0.25	82.00	3.49	16.02	9.30	1.50	12.24	5.71	5.71	1.00	Circ	18"	Conc	1	n/a	1.50	0.012	1020.38	1020.32	0.06	1.71	1022.99	1023.06
	K01	Junction	TO	105+75.00	-27.00			82.03			9.07	1.50																1023.08	1022.97
			ON	AMRN							9.07																		
K03	K03	Junction	FROM	105+95.00	-30.00	18.36	0.25	82.00	3.49	16.02	9.30	1.50	11.25	14.55	14.55	0.84	Circ	18"	Conc	1	n/a	1.50	0.012	1020.50	1020.38	0.12	1.71	1022.60	1022.99
	K02	Junction	TO	105+80.00	-30.00			82.00			9.07	1.50																1024.77	1023.08
			ON	AMRN							7.56																		
N01	N01	Junction	FROM	173+01.40	-37.50	1.05	0.86	5.00	14.88	13.36	7.76	1.50	7.97	33.50	35.50	0.42	Circ	18"	Conc	1	n/a	1.50	0.012	1051.65	1051.50	0.15	1.19	1055.19	1055.14
	NOUT	Outlet	TO	173+01.40	-73.00			2.14			7.92	1.36																1053.43	1052.86
			ON	AMRN							5.74																		
N02	N02	Junction	FROM	172+26.40	-37.50	0.80	0.86	5.00	14.88	10.15	5.89	1.50	7.06	73.00	75.00	0.33	Circ	18"	Conc	1	n/a	1.50	0.012	1051.90	1051.65	0.25	0.69	1055.56	1055.19
	N01	Junction	TO	173+01.40	-37.50			1.93			5.74	1.50																1054.03	1053.43
			ON	AMRN							3.77																		
N03	N03	Junction	FROM	170+73.30	-37.50	0.52	0.86	5.00	14.88	6.65	5.52	0.97	9.54	153.10	153.10	0.61	Circ	18"	Conc	1	n/a	1.50	0.012	1052.83	1051.90	0.93	0.61	1056.33	1055.56
	N02	Junction	TO	172+26.40	-37.50			1.47			3.77	1.50																1054.55	1054.03
			ON	AMRN							1.33																		
N04	N04	Junction	FROM	169+98.30	-37.50	0.18	0.86	5.00	14.88	2.35	4.11	0.54	9.20	75.00	75.00	0.56	Circ	18"	Conc	1	n/a	1.50	0.012	1053.25	1052.83	0.42	0.56	1056.92	1056.33
	N03	Junction	TO	170+73.30	-37.50			1.06			1.33	1.50																1054.58	1054.55
			ON	AMRN							1.33																		
N05	N05	Curb	FROM	169+92.80	-47.00	0.18	0.86	5.00	14.88	2.35	3.07	0.67	6.11	7.78	11.78	0.25	Circ	18"	Conc	1	n/a	1.50	0.012	1053.28	1053.25	0.03	0.25	1057.28	1056.92
	N04	Junction	TO	169+98.30	-37.50			1.00			1.42	1.32																1054.58	1054.58
			ON	AMRN							1.98																		
N06	N06	Curb	FROM	172+20.90	-47.00	0.28	0.85	5.00	14.88	3.49	3.34	0.86	6.11	7.78	11.78	0.25	Circ	18"	Conc	1	n/a	1.50	0.012	1051.93	1051.90	0.03	0.24	1055.90	1055.56
	N02	Junction	TO	172+26.40	-37.50			1.47			1.98	1.50																1054.04	1054.03

NOTES:
1. LINK DATA WAS CALCULATED IN GEOPAK DRAINAGE.

NUMBER	DATE	REVISION	APPROVED

STATE OF TEXAS
RILEY W. SLADEK
108887
LICENSED PROFESSIONAL ENGINEER
10/4/2016

LJA Engineering, Inc.
FRN - F-1386

Binkley & Barfield, Inc
consulting engineers
Texas Registration Number F-257

CEDAR PARK

ANDERSON MILL RD
HYDRAULIC DATA
LINKS

DESIGN BY: RS
DRAWN BY: CM
CHECKED BY: RS
APPROVED BY: DG
PROJECT NO:
DATE: 10/4/2016

SHEET: 15 OF 16
PAGE: 166

10/4/2016
3:12:42 PM
I:\1841\1402\CADD\SHEETS\NORTH\06-Drainage Details\NAMR*HYDR*DATA*LINKS100*07.dgn

100 YEAR - CONVEYANCE CONFIGURATION DATA

PIPE ID	STRUCTURE ID	STRUCTURE TYPE	LOCATION CHAIN/STATION/OFFSET			CUML AREA (acre)	CUML C	Tc USED ACTUAL Tc (min)	RAIN INT (in/hr)	TOTAL Q (cfs)	FLOW VEL V full / V actual (ft/s)	FLOW DEPTH (ft)	FULL PIPE CAP. (cfs)	ACTUAL PIPE LENGTH (ft)	HYD PIPE LENGTH (ft)	SLOPE (%)	PIPE SHAPE	PIPE SIZE	PIPE MATL	PIPE #	PIPE SPAN (FT)	PIPE RISE (FT)	N VALUE	PIPE INVERT ELEVATION UPPER END	PIPE INVERT ELEVATION LOWER END	FALL (ft)	FR SLOPE (%)	TOP OF GRATE/MH HGL ELEVATION UPPER END	TOP OF GRATE/MH HGL ELEVATION LOWER END
			ON	AMRN							1.82																		
N07	N07	Curb	FROM	172+20.90	47.00	0.25	0.86	5.00	14.88	3.22	3.65	0.75	7.04	111.84	117.84	0.33	Circ	18"	Conc	1	n/a	1.50	0.012	1052.04	1051.65	0.39	0.32	1055.90	1055.19
	N01	Junction	TO	173+01.40	-37.50			1.93			1.82	1.50																1053.53	1053.43
			ON	AMRN							2.44																		
N08	N08	Curb	FROM	169+92.80	47.00	0.34	0.86	5.00	14.88	4.31	4.19	0.85	7.59	113.84	117.84	0.38	Circ	18"	Conc	1	n/a	1.50	0.012	1053.28	1052.83	0.45	0.38	1057.28	1056.33
	N03	Junction	TO	170+73.30	-37.50			1.06			2.44	1.50																1054.71	1054.55
			ON	AMRN							0.00																		
P01	P01	Junction	FROM	120+30.00	19.50	0.00	0.00	0.00	0.00	0.00	1.05	0.01	27.39	28.28	28.28	5.01	Circ	18"	Conc	1	n/a	1.50	0.012	1017.42	1016.00	1.42	5.01	1024.04	1023.98
	POUT	Outlet	TO	120+14.90	42.83			0.63			1.05	0.01																1017.51	1016.01
			ON	AMRN							0.00																		
P02	P02	Junction	FROM	120+30.00	2.50	0.00	0.00	0.00	0.00	0.00	0.76	0.01	17.31	15.50	17.00	2.00	Circ	18"	Conc	1	n/a	1.50	0.012	1017.76	1017.42	0.34	2.00	1023.40	1024.04
	P01	Junction	TO	120+30.00	19.50			0.26			0.76	0.01																1017.85	1017.43
			ON	AMRN							0.00																		
P03	P03	Junction	FROM	120+30.00	-5.00	0.00	0.00	0.00	0.00	0.00	0.49	0.01	12.24	6.00	7.50	1.00	Circ	18"	Conc	1	n/a	1.50	0.012	1017.83	1017.76	0.08	1.00	1023.11	1023.40
	P02	Junction	TO	120+30.00	2.50			0.00			0.25	0.02																1017.96	1017.77

NOTES:
1. LINK DATA WAS CALCULATED IN GEOPAK DRAINAGE.

NUMBER	DATE	REVISION	APPROVED

STATE OF TEXAS
RILEY W. SLADEK
108887
LICENSED
PROFESSIONAL ENGINEER
10/4/2016

LJA Engineering, Inc.
FRN - F-1386

Binkley & Barfield, Inc
consulting engineers
Texas Registration Number F-257

CEDAR PARK

ANDERSON MILL RD
HYDRAULIC DATA
LINKS

DESIGN BY: RS
DRAWN BY: CM
CHECKED BY: RS
APPROVED BY: DG
PROJECT NO:
DATE: 10/4/2016

SHEET: 16 OF 16
PAGE: 167

10/4/2016
3:12:44 PM
I:\1841\1402\CADD\SHEETS\NORTH\06-Drainage Details\NAMR*HYDR*DATA*LINKS100*08.dgn

ANDERSON MILL ROAD NORTH - DITCH CALCULATIONS

DITCH NAME	UPSTREAM STATION (ft)	UPSTREAM OFFSET (ft)	UPSTREAM LT/RT	UPSTREAM FLOWLINE ELEVATION (ft)	DOWNSTREAM STATION (ft)	DOWNSTREAM OFFSET (ft)	DOWNSTREAM LT/RT	DOWNSTREAM FLOWLINE ELEVATION (ft)	BOTTOM WIDTH (ft)	LEFT SIDE SLOPE x:1	RIGHT SIDE SLOPE x:1	CHANNEL DEPTH (ft)	MANNING'S "n"	DESIGN FLOW (cfs)	SLOPE (ft/ft)	NORMAL DEPTH (ft)	VELOCITY (f/s)	SHEAR STRESS (lbs/ft²)
CULV 2 S	118+00	22.34	LT	1018.50	118+50	23.00	LT	1018.35	0.00	3.0	6.0	3.64	0.033	20.00	0.003	1.49	2.00	0.14
CULV 2 S	118+50	23.00	LT	1018.35	119+00	24.62	LT	1018.20	0.00	3.0	6.0	3.75	0.033	25.00	0.003	1.62	2.11	0.15
CULV 2 S	119+00	24.62	LT	1018.20	119+50	29.50	LT	1018.00	1.00	3.0	6.0	4.02	0.033	30.00	0.004	1.54	2.46	0.20

ANDERSON MILL ROAD NORTH - DITCH CALCULATIONS

DITCH NAME	UPSTREAM STATION (ft)	UPSTREAM OFFSET (ft)	UPSTREAM LT/RT	UPSTREAM FLOWLINE ELEVATION (ft)	DOWNSTREAM STATION (ft)	DOWNSTREAM OFFSET (ft)	DOWNSTREAM LT/RT	DOWNSTREAM FLOWLINE ELEVATION (ft)	BOTTOM WIDTH (ft)	LEFT SIDE SLOPE x:1	RIGHT SIDE SLOPE x:1	CHANNEL DEPTH (ft)	MANNING'S "n"	DESIGN FLOW (cfs)	SLOPE (ft/ft)	NORMAL DEPTH (ft)	VELOCITY (f/s)	SHEAR STRESS (lbs/ft²)
CULV 2 N	120+00	25.00	LT	1020.49	119+50	25.00	LT	1018.00	0.00	3.0	6.0	1.51	0.033	40.00	0.050	1.14	6.82	1.73
CULV 2 N	121+00	25.00	LT	1021.85	120+00	25.00	LT	1020.49	0.00	3.0	10.0	2.19	0.033	40.00	0.014	1.27	3.84	0.53
CULV 2 N	122+00	30.00	LT	1024.75	121+00	25.00	LT	1021.85	0.00	3.0	20.0	1.47	0.033	38.00	0.029	0.87	4.38	0.78
CULV 2 N	123+00	30.00	LT	1026.75	122+00	30.00	LT	1024.75	0.00	3.0	20.0	1.48	0.033	36.00	0.020	0.91	3.76	0.57
CULV 2 N	124+00	30.00	LT	1028.76	123+00	30.00	LT	1026.75	0.00	3.0	20.0	1.48	0.033	34.00	0.020	0.89	3.72	0.56
CULV 2 N	125+00	30.00	LT	1030.78	124+00	30.00	LT	1028.76	0.00	4.0	20.0	1.47	0.033	32.00	0.020	0.86	3.62	0.54
CULV 2 N	126+00	30.00	LT	1032.78	125+00	30.00	LT	1030.78	0.00	4.0	20.0	1.47	0.033	30.00	0.020	0.84	3.56	0.52
CULV 2 N	127+00	24.00	LT	1035.08	126+00	30.00	LT	1032.78	0.00	8.0	20.0	1.17	0.033	28.00	0.023	0.75	3.55	0.54
CULV 2 N	128+00	24.00	LT	1037.07	127+00	24.00	LT	1035.08	0.00	10.0	20.0	1.17	0.033	26.00	0.020	0.73	3.24	0.45
CULV 2 N	129+00	24.00	LT	1037.90	128+00	24.00	LT	1037.07	0.00	8.0	12.0	2.00	0.033	24.00	0.008	0.97	2.54	0.25
CULV 2 N	130+00	24.00	LT	1039.88	129+00	24.00	LT	1037.90	0.00	12.0	20.0	1.17	0.033	22.00	0.020	0.67	3.05	0.41
CULV 2 N	131+00	20.00	LT	1040.76	130+00	24.00	LT	1039.88	0.00	12.0	20.0	0.97	0.033	20.00	0.009	0.75	2.20	0.21
CULV 2 N	132+00	20.00	LT	1041.28	131+00	20.00	LT	1040.76	0.00	10.0	20.0	0.97	0.033	18.00	0.005	0.82	1.79	0.13
CULV 2 N	133+00	20.00	LT	1041.80	132+00	20.00	LT	1041.28	0.00	12.0	20.0	0.97	0.033	16.00	0.005	0.77	1.71	0.12
CULV 2 N	134+00	20.00	LT	1042.31	133+00	20.00	LT	1041.80	0.00	12.0	20.0	0.97	0.033	14.00	0.005	0.73	1.65	0.12
CULV 2 N	135+00	20.00	LT	1042.83	134+00	20.00	LT	1042.31	0.00	8.0	20.0	0.97	0.033	12.00	0.005	0.72	1.64	0.12
CULV 2 N	136+00	21.00	LT	1043.30	135+00	20.00	LT	1042.83	0.00	20.0	20.0	0.98	0.033	10.00	0.005	0.60	1.38	0.09
CULV 2 N	137+00	25.00	LT	1043.62	136+00	21.00	LT	1043.30	0.00	20.0	20.0	1.22	0.033	8.00	0.003	0.59	1.13	0.06
CULV 2 N	138+00	40.00	LT	1044.09	137+00	25.00	LT	1043.62	0.00	15.0	20.0	0.78	0.033	6.00	0.005	0.52	1.25	0.08
CULV 2 N	139+00	29.00	LT	1044.46	138+00	40.00	LT	1044.09	0.00	8.0	8.0	0.44	0.033	1.00	0.004	0.37	0.89	0.04

ANDERSON MILL ROAD NORTH - DITCH CALCULATIONS

DITCH NAME	UPSTREAM STATION (ft)	UPSTREAM OFFSET (ft)	UPSTREAM LT/RT	UPSTREAM FLOWLINE ELEVATION (ft)	DOWNSTREAM STATION (ft)	DOWNSTREAM OFFSET (ft)	DOWNSTREAM LT/RT	DOWNSTREAM FLOWLINE ELEVATION (ft)	BOTTOM WIDTH (ft)	LEFT SIDE SLOPE x:1	RIGHT SIDE SLOPE x:1	CHANNEL DEPTH (ft)	MANNING'S "n"	DESIGN FLOW (cfs)	SLOPE (ft/ft)	NORMAL DEPTH (ft)	VELOCITY (f/s)	SHEAR STRESS (lbs/ft²)
E26	145+50	54.88	RT	1051.99	145+00	55.03	RT	1051.14	0.00	4.0	4.0	1.97	0.033	11.00	0.017	0.90	3.38	0.46
E26	146+00	55.07	RT	1052.75	145+50	54.88	RT	1051.99	0.00	4.0	4.0	2.02	0.033	8.00	0.015	0.82	3.00	0.38
E26	146+50	54.78	RT	1053.76	146+00	55.07	RT	1052.75	0.00	4.0	4.0	1.82	0.033	4.00	0.020	0.60	2.80	0.36

NUMBER	DATE	REVISION	APPROVED

STATE OF TEXAS
RILEY W. SLADEK
108887
LICENSED
PROFESSIONAL ENGINEER
10/4/2016

LJA Engineering, Inc.
FRN - F-1386

Binkley & Barfield, Inc
consulting engineers
Texas Registration Number F-257

CEDAR PARK

ANDERSON MILL RD
DITCH CALCULATIONS

DESIGN BY: RS
DRAWN BY: CM
CHECKED BY: RS
APPROVED BY: DG
PROJECT NO:
DATE: 10/4/2016

SHEET: 1 OF 3
PAGE: 168

10/4/2016
3:12:44 PM
I:\1841\1402\CADD\SHEETS\NORTH\06-Drainage Details\NAMR*DITCH*DATA*01.dgn

ANDERSON MILL ROAD NORTH - DITCH CALCULATIONS

DITCH NAME	UPSTREAM STATION (ft)	UPSTREAM OFFSET (ft)	UPSTREAM LT/RT	UPSTREAM FLOWLINE ELEVATION (ft)	DOWNSTREAM STATION (ft)	DOWNSTREAM OFFSET (ft)	DOWNSTREAM LT/RT	DOWNSTREAM FLOWLINE ELEVATION (ft)	BOTTOM WIDTH (ft)	LEFT SIDE SLOPE x:1	RIGHT SIDE SLOPE x:1	CHANNEL DEPTH (ft)	MANNING'S "n"	DESIGN FLOW (cfs)	SLOPE (ft/ft)	NORMAL DEPTH (ft)	VELOCITY (f/s)	SHEAR STRESS (lbs/ft^3)
E27	148+00	54.10	RT	1056.36	147+00	53.97	RT	1054.65	0.00	4.0	4.0	1.65	0.033	14.00	0.017	0.99	3.61	0.51
E27	149+00	54.58	RT	1057.73	148+00	54.10	RT	1056.36	0.00	4.0	4.0	1.90	0.033	14.00	0.014	1.03	3.32	0.43
E27	150+00	52.58	RT	1059.97	149+00	54.58	RT	1057.73	0.00	4.0	4.0	1.28	0.033	12.00	0.022	0.89	3.83	0.60

ANDERSON MILL ROAD NORTH - DITCH CALCULATIONS

DITCH NAME	UPSTREAM STATION (ft)	UPSTREAM OFFSET (ft)	UPSTREAM LT/RT	UPSTREAM FLOWLINE ELEVATION (ft)	DOWNSTREAM STATION (ft)	DOWNSTREAM OFFSET (ft)	DOWNSTREAM LT/RT	DOWNSTREAM FLOWLINE ELEVATION (ft)	BOTTOM WIDTH (ft)	LEFT SIDE SLOPE x:1	RIGHT SIDE SLOPE x:1	CHANNEL DEPTH (ft)	MANNING'S "n"	DESIGN FLOW (cfs)	SLOPE (ft/ft)	NORMAL DEPTH (ft)	VELOCITY (f/s)	SHEAR STRESS (lbs/ft^3)
E28	153+00	51.29	RT	1064.54	152+00	51.42	RT	1063.17	0.00	4.0	3.0	1.53	0.033	17.00	0.014	1.16	3.58	0.48
E28	154+00	51.97	RT	1065.94	153+00	51.29	RT	1064.54	0.00	4.0	4.0	1.74	0.033	14.00	0.014	1.02	3.34	0.43
E28	155+00	49.49	RT	1067.97	154+00	51.97	RT	1065.94	0.00	3.0	3.0	1.33	0.033	8.00	0.020	0.87	3.55	0.52
E28	156+00	48.61	RT	1069.88	155+00	49.49	RT	1067.97	0.00	3.0	4.0	1.04	0.033	4.00	0.019	0.64	2.83	0.36
E28	157+00	46.45	RT	1072.04	156+00	48.61	RT	1069.88	0.00	2.0	2.0	0.66	0.012	2.00	0.022	0.60	2.76	0.36
E28	158+00	47.37	RT	1072.66	157+00	46.45	RT	1072.04	0.00	2.0	2.0	0.93	0.012	1.00	0.006	0.59	1.43	0.10

ANDERSON MILL ROAD NORTH - DITCH CALCULATIONS

DITCH NAME	UPSTREAM STATION (ft)	UPSTREAM OFFSET (ft)	UPSTREAM LT/RT	UPSTREAM FLOWLINE ELEVATION (ft)	DOWNSTREAM STATION (ft)	DOWNSTREAM OFFSET (ft)	DOWNSTREAM LT/RT	DOWNSTREAM FLOWLINE ELEVATION (ft)	BOTTOM WIDTH (ft)	LEFT SIDE SLOPE x:1	RIGHT SIDE SLOPE x:1	CHANNEL DEPTH (ft)	MANNING'S "n"	DESIGN FLOW (cfs)	SLOPE (ft/ft)	NORMAL DEPTH (ft)	VELOCITY (f/s)	SHEAR STRESS (lbs/ft^3)
F09	159+00	41.02	RT	1071.84	159+50	41.02	RT	1071.28	0.00	4.0	4.0	1.38	0.033	3.00	0.011	0.60	2.10	0.20
F09	158+50	41.02	RT	1072.10	159+00	41.02	RT	1071.84	0.00	4.0	4.0	1.38	0.033	1.00	0.005	0.46	1.18	0.07

ANDERSON MILL ROAD NORTH - DITCH CALCULATIONS

DITCH NAME	UPSTREAM STATION (ft)	UPSTREAM OFFSET (ft)	UPSTREAM LT/RT	UPSTREAM FLOWLINE ELEVATION (ft)	DOWNSTREAM STATION (ft)	DOWNSTREAM OFFSET (ft)	DOWNSTREAM LT/RT	DOWNSTREAM FLOWLINE ELEVATION (ft)	BOTTOM WIDTH (ft)	LEFT SIDE SLOPE x:1	RIGHT SIDE SLOPE x:1	CHANNEL DEPTH (ft)	MANNING'S "n"	DESIGN FLOW (cfs)	SLOPE (ft/ft)	NORMAL DEPTH (ft)	VELOCITY (f/s)	SHEAR STRESS (lbs/ft^3)
F15	161+00	40.04	RT	1067.74	161+50	40.04	RT	1066.68	0.00	4.0	4.0	1.14	0.033	4.00	0.021	0.59	2.85	0.38
F15	161+50	40.04	RT	1066.68	162+00	40.04	RT	1065.89	0.00	4.0	4.0	1.13	0.033	8.00	0.016	0.81	3.05	0.39
F15	162+00	40.04	RT	1065.89	162+50	40.04	RT	1065.36	0.00	4.0	4.0	1.13	0.033	12.00	0.011	1.02	2.89	0.32
F15	162+50	40.04	RT	1065.36	163+00	40.04	RT	1065.20	0.00	4.0	4.0	1.13	0.012	15.00	0.003	0.87	5.00	0.08

NUMBER	DATE	REVISION	APPROVED

STATE OF TEXAS
RILEY W. SLADEK
108887
LICENSED
PROFESSIONAL ENGINEER
10/4/2016

LJA Engineering, Inc.
FRN - F-1386

Binkley & Barfield, Inc
consulting engineers
Texas Registration Number F-257

CEDAR PARK

ANDERSON MILL RD
DITCH CALCULATIONS

DESIGN BY: RS
DRAWN BY: CM
CHECKED BY: RS
APPROVED BY: DG
PROJECT NO:
DATE: 10/4/2016

SHEET: 2 OF 3
PAGE: 169

10/4/2016
3:12:45 PM
I:\1841\1402\CADD\SHEETS\NORTH\06-Drainage Details\NAMR*DITCH*DATA*02.dgn

ANDERSON MILL ROAD NORTH - DITCH CALCULATIONS

DITCH NAME	UPSTREAM STATION (ft)	UPSTREAM OFFSET (ft)	UPSTREAM LT/RT	UPSTREAM FLOWLINE ELEVATION (ft)	DOWNSTREAM STATION (ft)	DOWNSTREAM OFFSET (ft)	DOWNSTREAM LT/RT	DOWNSTREAM FLOWLINE ELEVATION (ft)	BOTTOM WIDTH (ft)	LEFT SIDE SLOPE x:1	RIGHT SIDE SLOPE x:1	CHANNEL DEPTH (ft)	MANNING'S "n"	DESIGN FLOW (cfs)	SLOPE (ft/ft)	NORMAL DEPTH (ft)	VELOCITY (f/s)	SHEAR STRESS (lbs/ft^3)
F20	164+50	40.16	RT	1065.29	165+00	40.30	RT	1064.97	0.00	4.0	4.0	1.16	0.033	2.00	0.006	0.57	1.53	0.11
F20	165+00	40.30	RT	1064.97	165+50	40.45	RT	1064.42	0.00	4.0	4.0	1.20	0.033	4.00	0.011	0.67	2.23	0.22
F20	165+50	40.45	RT	1064.42	166+00	40.60	RT	1063.75	0.00	4.0	4.0	1.24	0.033	6.00	0.013	0.75	2.66	0.30

ANDERSON MILL ROAD NORTH - DITCH CALCULATIONS

DITCH NAME	UPSTREAM STATION (ft)	UPSTREAM OFFSET (ft)	UPSTREAM LT/RT	UPSTREAM FLOWLINE ELEVATION (ft)	DOWNSTREAM STATION (ft)	DOWNSTREAM OFFSET (ft)	DOWNSTREAM LT/RT	DOWNSTREAM FLOWLINE ELEVATION (ft)	BOTTOM WIDTH (ft)	LEFT SIDE SLOPE x:1	RIGHT SIDE SLOPE x:1	CHANNEL DEPTH (ft)	MANNING'S "n"	DESIGN FLOW (cfs)	SLOPE (ft/ft)	NORMAL DEPTH (ft)	VELOCITY (f/s)	SHEAR STRESS (lbs/ft^3)
G13	175+00	50.00	LT	1054.60	175+50	50.70	LT	1054.30	0.00	3.0	3.0	0.71	0.033	2.00	0.006	0.63	1.71	0.11
G13	175+50	50.70	LT	1054.30	176+00	51.70	LT	1054.00	0.00	3.0	3.0	1.08	0.033	5.00	0.006	0.88	2.15	0.16

ANDERSON MILL ROAD NORTH - DITCH CALCULATIONS

DITCH NAME	UPSTREAM STATION (ft)	UPSTREAM OFFSET (ft)	UPSTREAM LT/RT	UPSTREAM FLOWLINE ELEVATION (ft)	DOWNSTREAM STATION (ft)	DOWNSTREAM OFFSET (ft)	DOWNSTREAM LT/RT	DOWNSTREAM FLOWLINE ELEVATION (ft)	BOTTOM WIDTH (ft)	LEFT SIDE SLOPE x:1	RIGHT SIDE SLOPE x:1	CHANNEL DEPTH (ft)	MANNING'S "n"	DESIGN FLOW (cfs)	SLOPE (ft/ft)	NORMAL DEPTH (ft)	VELOCITY (f/s)	SHEAR STRESS (lbs/ft^3)
D20	140+50	41.34	RT	1044.50	140+00	45.07	RT	1043.00	0.00	3.0	3.0	1.95	0.033	4.00	0.030	0.60	3.70	0.53
D20	141+00	40.60	RT	1045.09	140+50	41.34	RT	1044.50	0.00	3.0	3.0	1.70	0.033	4.00	0.012	0.71	2.62	0.25
D20	141+50	40.44	RT	1045.65	141+00	40.60	RT	1045.09	0.00	3.0	3.0	1.65	0.033	4.00	0.011	0.72	2.56	0.24

ANDERSON MILL ROAD NORTH - DITCH CALCULATIONS

DITCH NAME	UPSTREAM STATION (ft)	UPSTREAM OFFSET (ft)	UPSTREAM LT/RT	UPSTREAM FLOWLINE ELEVATION (ft)	DOWNSTREAM STATION (ft)	DOWNSTREAM OFFSET (ft)	DOWNSTREAM LT/RT	DOWNSTREAM FLOWLINE ELEVATION (ft)	BOTTOM WIDTH (ft)	LEFT SIDE SLOPE x:1	RIGHT SIDE SLOPE x:1	CHANNEL DEPTH (ft)	MANNING'S "n"	DESIGN FLOW (cfs)	SLOPE (ft/ft)	NORMAL DEPTH (ft)	VELOCITY (f/s)	SHEAR STRESS (lbs/ft^3)
G11	170+00	53.33	LT	1055.89	170+50	53.09	LT	1055.55	0.00	3.0	3.0	1.28	0.033	12.00	0.007	1.23	2.62	0.25
G11	170+50	53.09	LT	1055.55	171+00	54.74	LT	1054.72	0.00	3.0	3.0	1.19	0.033	10.00	0.017	0.98	3.48	0.48
G11	171+00	54.74	LT	1054.72	171+50	54.64	LT	1054.50	0.00	3.0	3.0	1.75	0.033	8.00	0.004	1.16	2.00	0.15
G11	171+50	54.64	LT	1054.50	172+00	54.79	LT	1054.20	0.00	3.0	3.0	1.71	0.033	6.00	0.006	0.98	2.09	0.17
G11	172+00	54.79	LT	1054.20	172+50	54.64	LT	1054.00	0.00	3.0	3.0	1.76	0.033	4.00	0.004	0.91	1.62	0.11

NUMBER	DATE	REVISION	APPROVED

STATE OF TEXAS
RILEY W. SLADEK
108887
LICENSED
PROFESSIONAL ENGINEER
10/4/2016

LJA Engineering, Inc.
FRN - F-1386

Binkley & Barfield, Inc
consulting engineers
Texas Registration Number F-257

CEDAR PARK

ANDERSON MILL RD
DITCH CALCULATIONS

DESIGN BY: RS
DRAWN BY: CM
CHECKED BY: RS
APPROVED BY: DG
PROJECT NO:
DATE: 10/4/2016

SHEET: 3 OF 3
PAGE: 170

10/4/2016
3:12:45 PM
I:\1841\1402\CADD\SHEETS\NORTH\06-Drainage Details\NAMR*DITCH*DATA*03.dgn

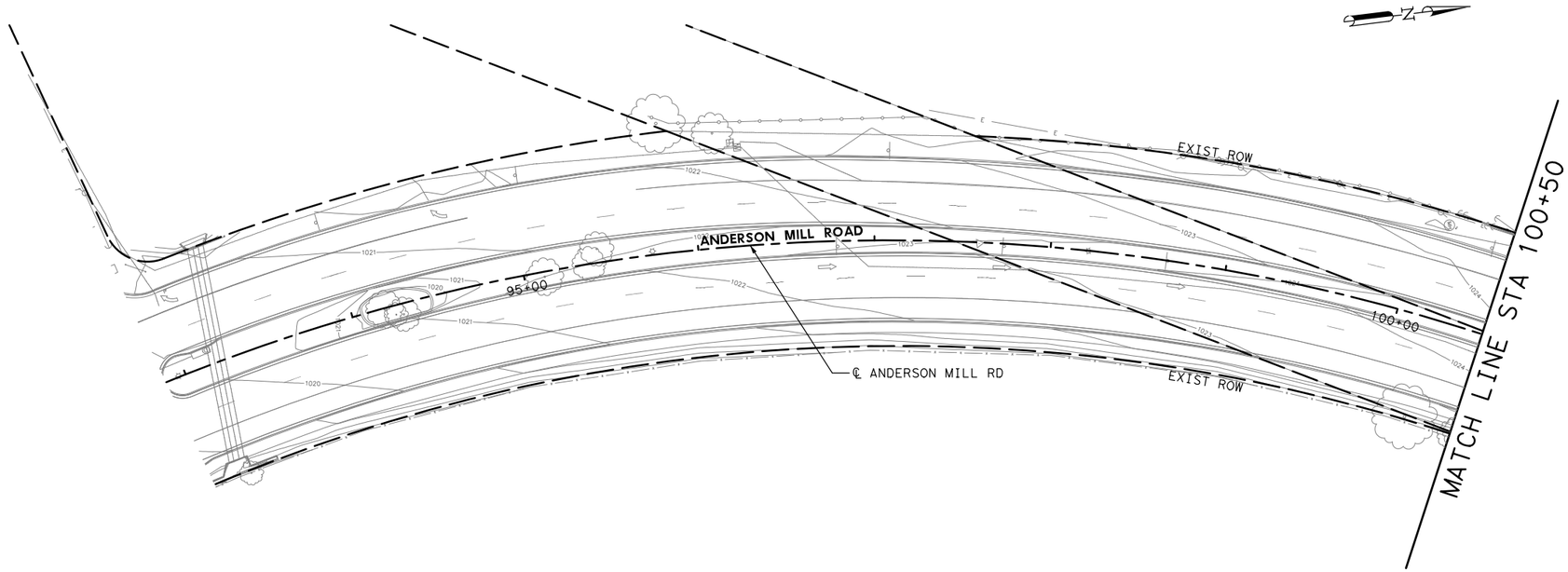

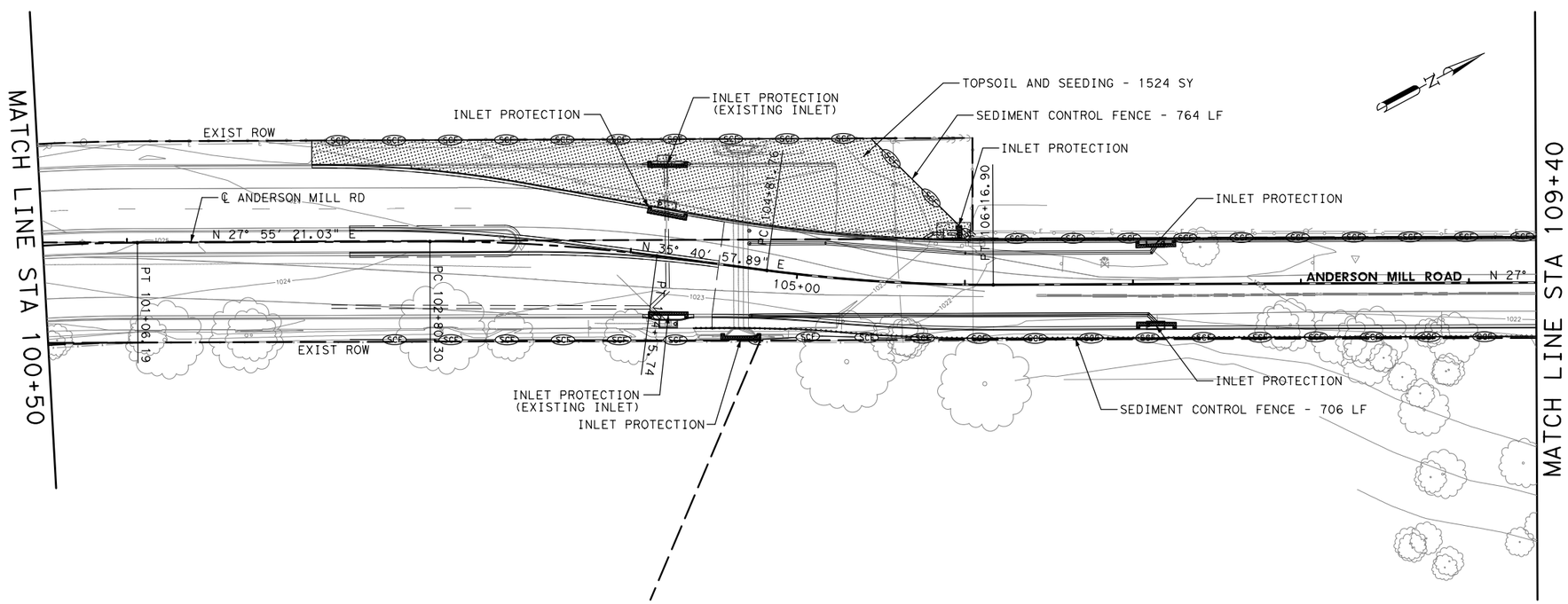

0' 10' 20' 40'

SCALE: 1"=40'

LEGEND

- ROCK BERM
- SCF — SEDIMENT CONTROL FENCE
- STORM INLET PROTECTION
- TOPSOIL AND SEEDING
- SOIL RETENTION BLANKET

EROSION AND SEDIMENTATION CONTROL NOTES:

1. EROSION CONTROL MEASURES, SITE WORK, AND RESTORATION WORK SHALL BE IN ACCORDANCE WITH THE CITY OF CEDAR PARK'S SUBDIVISION CODE AND CITY OF AUSTIN SPECIFICATIONS, EXCEPT AS NOTED BELOW AND APPROVED BY CITY COUNCIL.

2. SLOPES SHALL BE SODDED OR SEEDED WITH THE APPROPRIATE GRASS, GRASS MIXTURES, OR GROUND COVER SUITABLE TO THE AREA AND SEASON TO WHICH THEY ARE APPLIED.

3. SILT FENCES, ROCK BERMS, AND SIMILARLY RECOGNIZED TECHNIQUES AND MATERIALS SHALL BE EMPLOYED DURING CONSTRUCTION TO PREVENT POINT SOURCE SEDIMENTATION LOADING OF DOWNSTREAM FACILITIES. SUCH INSTALLATION SHALL BE REGULARLY INSPECTED BY THE CITY OF CEDAR PARK FOR EFFECTIVENESS. ADDITIONAL MEASURES MAY BE REQUIRED IF, IN THE OPINION OF THE CITY ENGINEER, THEY ARE WARRANTED.

4. ALL TEMPORARY EROSION CONTROL MEASURES SHALL NOT BE REMOVED UNTIL FINAL INSPECTION AND APPROVAL OF THE PROJECT BY THE ENGINEER.

5. IT SHALL BE THE REPONSIBILITY OF THE CONTRACTOR TO MAINTAIN ALL TEMPORARY EROSION CONTROL STRUCTURES AND TO REMOVE EACH STRUCTURE AS APPROVED BY THE ENGINEER.

NUMBER	DATE	REVISION	APPROVED

STATE OF TEXAS
GREGORY C. CALKINS
111309
LICENSED
PROFESSIONAL ENGINEER

10/06/2016

CEDAR PARK

Binkley & Barfield, Inc
consulting engineers
Texas Registration Number F-257

ANDERSON MILL ROAD
GASPAR BEND TO WHITESTONE BLVD
EROSION CONTROL PLANS

BEGIN PROJECT - STA 109+40

DESIGN BY:	GCC	SCALE:	1"=40'
DRAWN BY:	DSH		
CHECKED BY:	DRE		
APPROVED BY:	BDR	SHEET:	1 OF 5
PROJECT NO:	156402		
DATE:	10/6/2016	PAGE:	171

10/6/2016
8:49:45 AM
...\CADD\SHEETS\EVEC1*AM*01.dgn

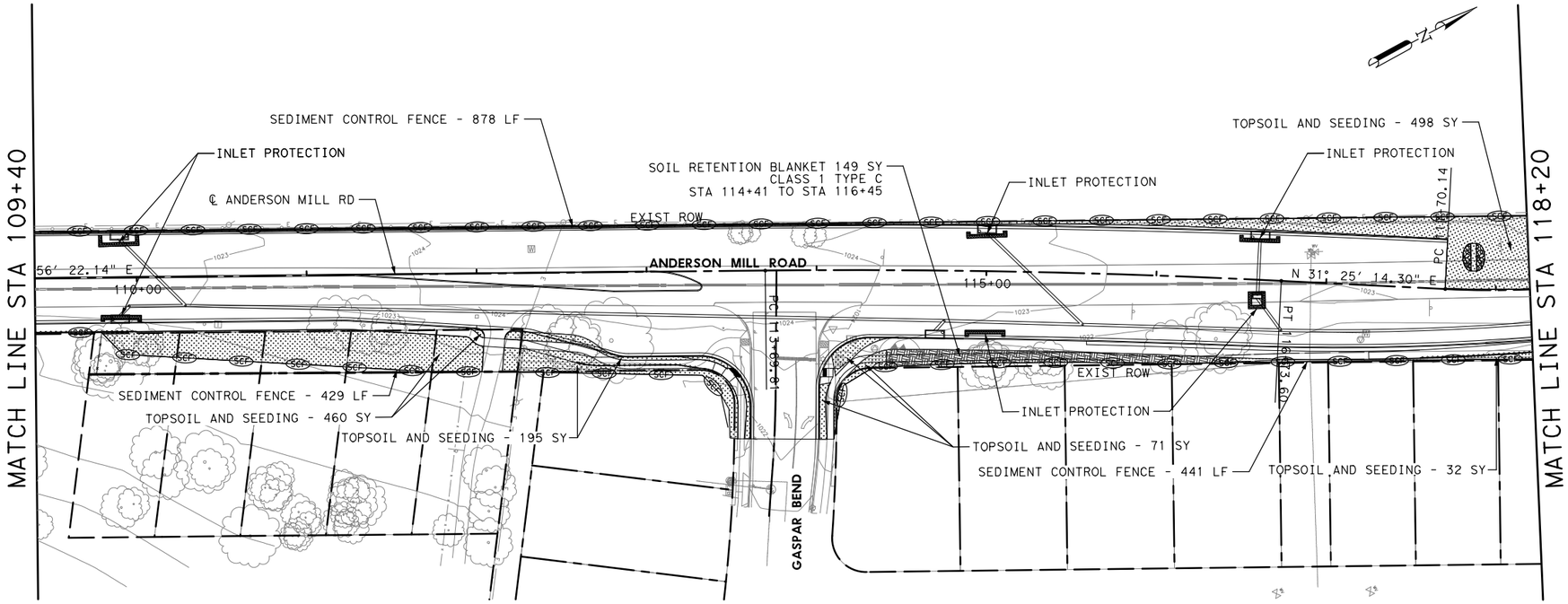

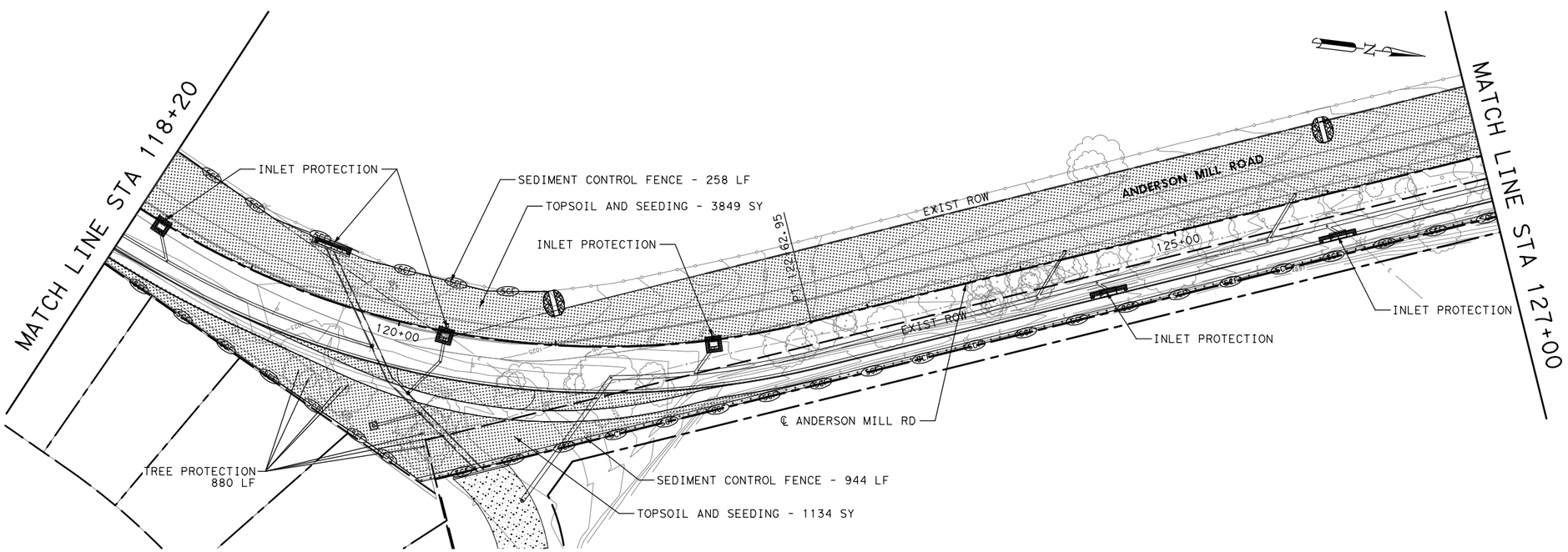

0' 10' 20' 40'

SCALE: 1"=40'

LEGEND

- ROCK BERM
- SCF — SEDIMENT CONTROL FENCE
- STORM INLET PROTECTION
- TOPSOIL AND SEEDING
- SOIL RETENTION BLANKET

EROSION AND SEDIMENTATION CONTROL NOTES:

1. EROSION CONTROL MEASURES, SITE WORK, AND RESTORATION WORK SHALL BE IN ACCORDANCE WITH THE CITY OF CEDAR PARK'S SUBDIVISION CODE AND CITY OF AUSTIN SPECIFICATIONS, EXCEPT AS NOTED BELOW AND APPROVED BY CITY COUNCIL.

2. SLOPES SHALL BE SODDED OR SEEDED WITH THE APPROPRIATE GRASS, GRASS MIXTURES, OR GROUND COVER SUITABLE TO THE AREA AND SEASON TO WHICH THEY ARE APPLIED.

3. SILT FENCES, ROCK BERMS, AND SIMILARLY RECOGNIZED TECHNIQUES AND MATERIALS SHALL BE EMPLOYED DURING CONSTRUCTION TO PREVENT POINT SOURCE SEDIMENTATION LOADING OF DOWNSTREAM FACILITIES. SUCH INSTALLATION SHALL BE REGULARLY INSPECTED BY THE CITY OF CEDAR PARK FOR EFFECTIVENESS. ADDITIONAL MEASURES MAY BE REQUIRED IF, IN THE OPINION OF THE CITY ENGINEER, THEY ARE WARRANTED.

4. ALL TEMPORARY EROSION CONTROL MEASURES SHALL NOT BE REMOVED UNTIL FINAL INSPECTION AND APPROVAL OF THE PROJECT BY THE ENGINEER.

5. IT SHALL BE THE REPONSIBILITY OF THE CONTRACTOR TO MAINTAIN ALL TEMPORARY EROSION CONTROL STRUCTURES AND TO REMOVE EACH STRUCTURE AS APPROVED BY THE ENGINEER.

NUMBER	DATE	REVISION	APPROVED

STATE OF TEXAS
GREGORY C. CALKINS
111309
LICENSED
PROFESSIONAL ENGINEER
10/06/2016

CEDAR PARK

Binkley & Barfield, Inc
consulting engineers
Texas Registration Number F-257

ANDERSON MILL ROAD
GASPAR BEND TO WHITESTONE BLVD
EROSION CONTROL PLANS

STA 109+40 - STA 127+00

DESIGN BY:	GCC	SCALE:	1"=40'
DRAWN BY:	DSH		
CHECKED BY:	DRE	SHEET:	2 OF 5
APPROVED BY:	BDR		
PROJECT NO:	156402	PAGE:	172
DATE:	10/6/2016		

10/6/2016
8:49:47 AM
...\CADD\SHEETS\EVEC1*AM*02.dgn

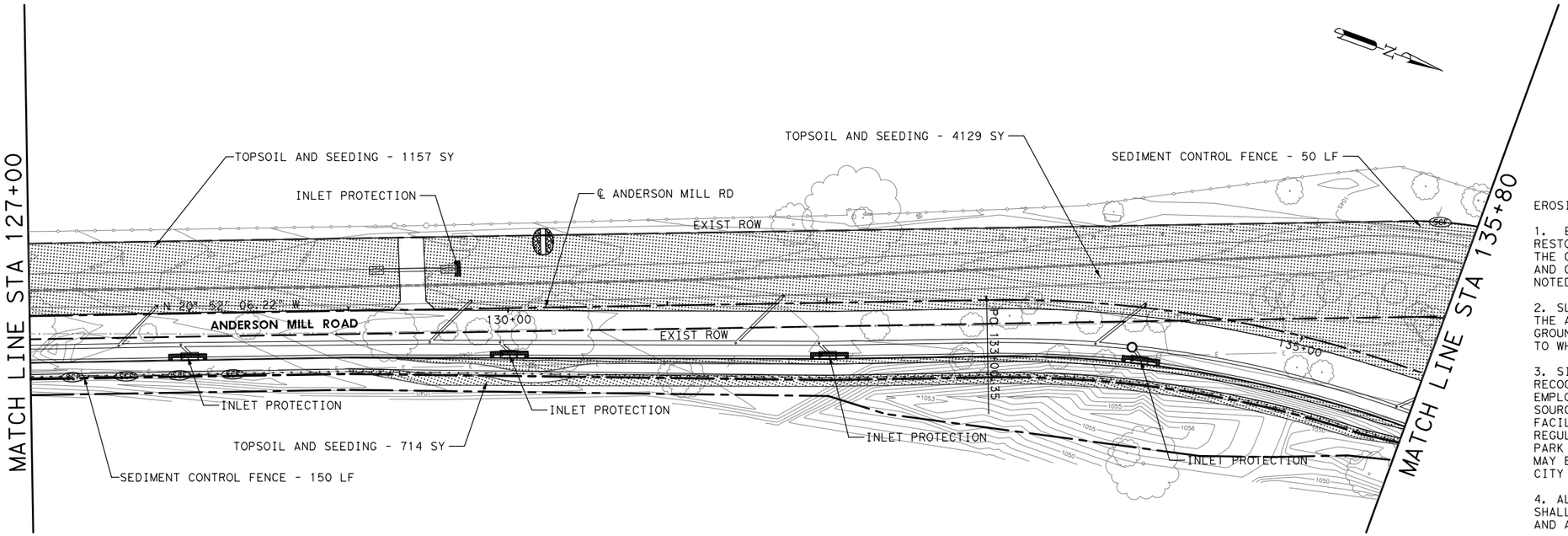

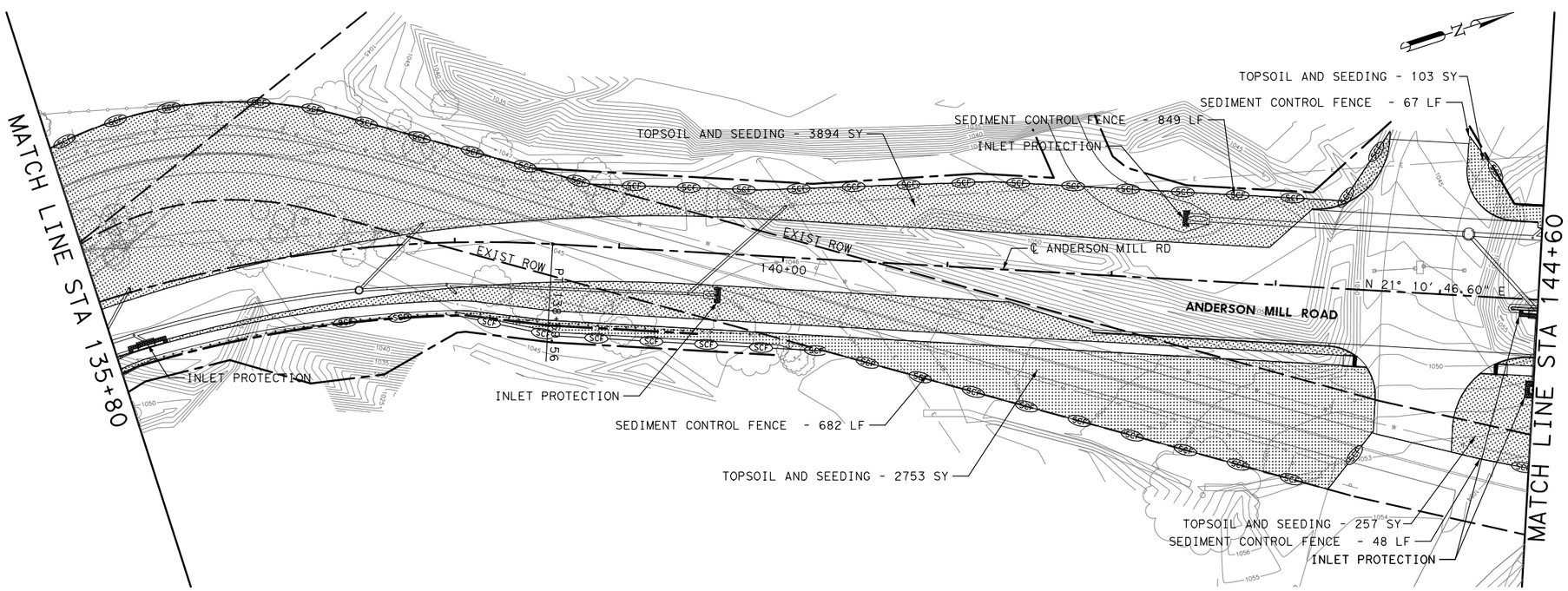

0' 10' 20' 40'

SCALE: 1"=40'

LEGEND

- ROCK BERM
- SEDIMENT CONTROL FENCE
- STORM INLET PROTECTION
- TOPSOIL AND SEEDING
- SOIL RETENTION BLANKET

EROSION AND SEDIMENTATION CONTROL NOTES:

1. EROSION CONTROL MEASURES, SITE WORK, AND RESTORATION WORK SHALL BE IN ACCORDANCE WITH THE CITY OF CEDAR PARK'S SUBDIVISION CODE AND CITY OF AUSTIN SPECIFICATIONS, EXCEPT AS NOTED BELOW AND APPROVED BY CITY COUNCIL.

2. SLOPES SHALL BE SODDED OR SEEDED WITH THE APPROPRIATE GRASS, GRASS MIXTURES, OR GROUND COVER SUITABLE TO THE AREA AND SEASON TO WHICH THEY ARE APPLIED.

3. SILT FENCES, ROCK BERMS, AND SIMILARLY RECOGNIZED TECHNIQUES AND MATERIALS SHALL BE EMPLOYED DURING CONSTRUCTION TO PREVENT POINT SOURCE SEDIMENTATION LOADING OF DOWNSTREAM FACILITIES. SUCH INSTALLATION SHALL BE REGULARLY INSPECTED BY THE CITY OF CEDAR PARK FOR EFFECTIVENESS. ADDITIONAL MEASURES MAY BE REQUIRED IF, IN THE OPINION OF THE CITY ENGINEER, THEY ARE WARRANTED.

4. ALL TEMPORARY EROSION CONTROL MEASURES SHALL NOT BE REMOVED UNTIL FINAL INSPECTION AND APPROVAL OF THE PROJECT BY THE ENGINEER.

5. IT SHALL BE THE REPONSIBILITY OF THE CONTRACTOR TO MAINTAIN ALL TEMPORARY EROSION CONTROL STRUCTURES AND TO REMOVE EACH STRUCTURE AS APPROVED BY THE ENGINEER.

NUMBER	DATE	REVISION	APPROVED

STATE OF TEXAS
GREGORY C. CALKINS
111309
LICENSED
PROFESSIONAL ENGINEER
10/06/2016

CEDAR PARK

Binkley & Barfield, Inc
consulting engineers
Texas Registration Number F-257

ANDERSON MILL ROAD
GASPAR BEND TO WHITESTONE BLVD
EROSION CONTROL PLANS

STA 127+00 - STA 144+60

DESIGN BY:	GCC	SCALE:	1"=40'
DRAWN BY:	DSH		
CHECKED BY:	DRE	SHEET:	3 OF 5
APPROVED BY:	BDR		
PROJECT NO:	156402	PAGE:	173
DATE:	10/6/2016		

10/6/2016
8:49:49 AM
...\CADD\SHEETS\EVEC1*AM*03.dgn

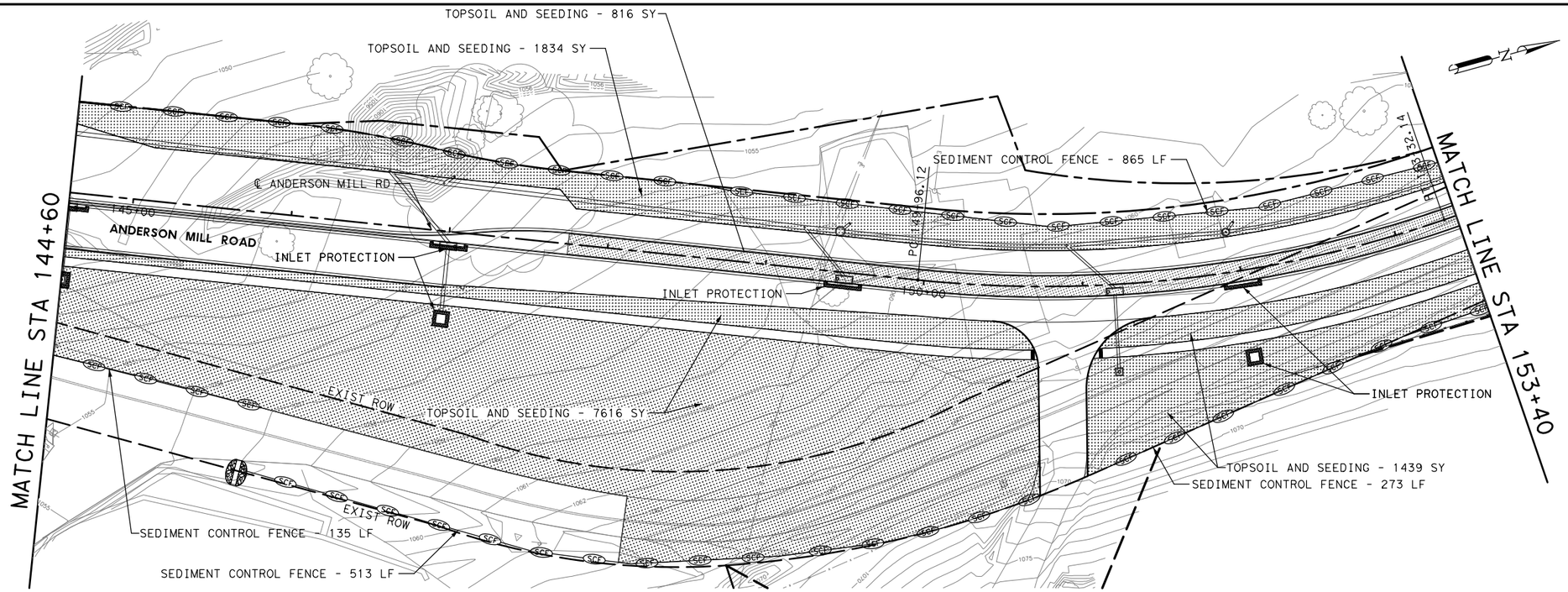

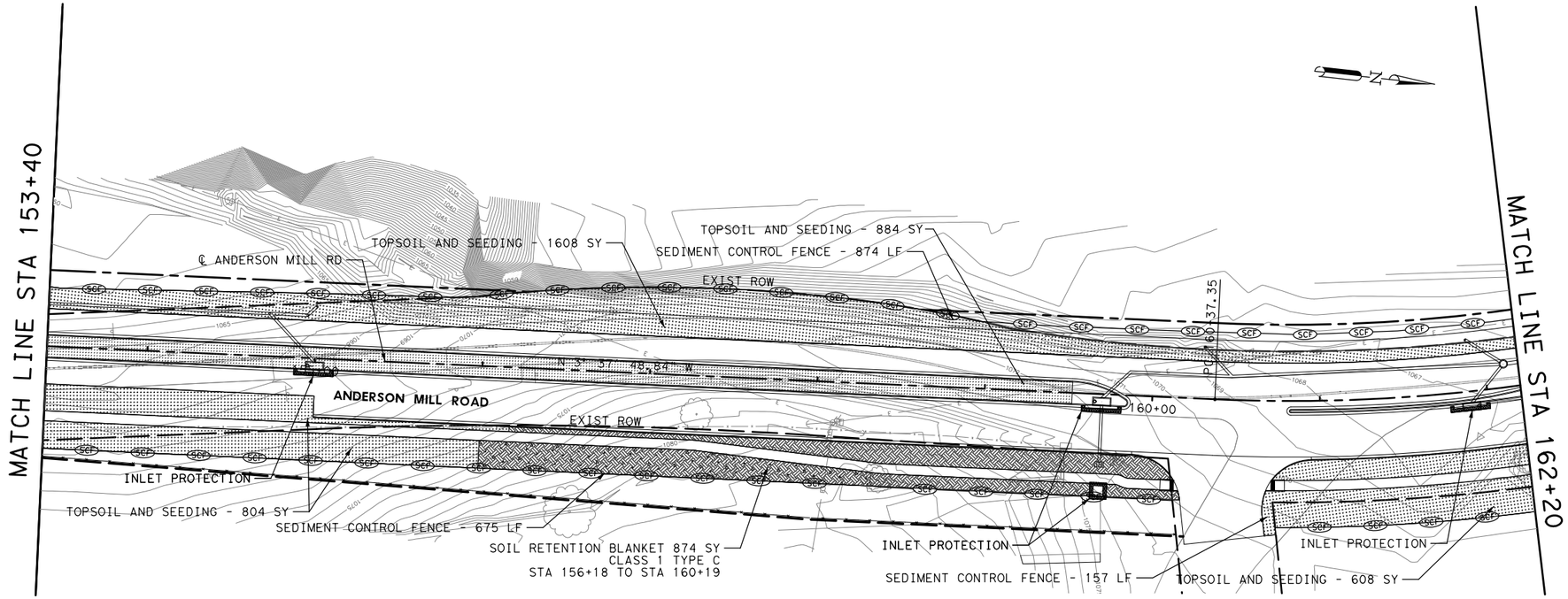

0' 10' 20' 40'
SCALE: 1"=40'

LEGEND

- ROCK BERM
- SCF — SEDIMENT CONTROL FENCE
- STORM INLET PROTECTION
- TOPSOIL AND SEEDING
- SOIL RETENTION BLANKET

EROSION AND SEDIMENTATION CONTROL NOTES:

1. EROSION CONTROL MEASURES, SITE WORK, AND RESTORATION WORK SHALL BE IN ACCORDANCE WITH THE CITY OF CEDAR PARK'S SUBDIVISION CODE AND CITY OF AUSTIN SPECIFICATIONS, EXCEPT AS NOTED BELOW AND APPROVED BY CITY COUNCIL.

2. SLOPES SHALL BE SODDED OR SEEDED WITH THE APPROPRIATE GRASS, GRASS MIXTURES, OR GROUND COVER SUITABLE TO THE AREA AND SEASON TO WHICH THEY ARE APPLIED.

3. SILT FENCES, ROCK BERMS, AND SIMILARLY RECOGNIZED TECHNIQUES AND MATERIALS SHALL BE EMPLOYED DURING CONSTRUCTION TO PREVENT POINT SOURCE SEDIMENTATION LOADING OF DOWNSTREAM FACILITIES. SUCH INSTALLATION SHALL BE REGULARLY INSPECTED BY THE CITY OF CEDAR PARK FOR EFFECTIVENESS. ADDITIONAL MEASURES MAY BE REQUIRED IF, IN THE OPINION OF THE CITY ENGINEER, THEY ARE WARRANTED.

4. ALL TEMPORARY EROSION CONTROL MEASURES SHALL NOT BE REMOVED UNTIL FINAL INSPECTION AND APPROVAL OF THE PROJECT BY THE ENGINEER.

5. IT SHALL BE THE REPONSIBILITY OF THE CONTRACTOR TO MAINTAIN ALL TEMPORARY EROSION CONTROL STRUCTURES AND TO REMOVE EACH STRUCTURE AS APPROVED BY THE ENGINEER.

NUMBER	DATE	REVISION	APPROVED

STATE OF TEXAS
GREGORY C. CALKINS
111309
LICENSED
PROFESSIONAL ENGINEER
10/06/2016

CEDAR PARK

Binkley & Barfield, Inc
consulting engineers
Texas Registration Number F-257

ANDERSON MILL ROAD
GASPAR BEND TO WHITESTONE BLVD
EROSION CONTROL PLANS

STA 144+60 - STA 162+20

DESIGN BY:	GCC	SCALE:	1"=40'
DRAWN BY:	DSH		
CHECKED BY:	DRE	SHEET:	4 OF 5
APPROVED BY:	BDR		
PROJECT NO:	156402	PAGE:	174
DATE:	10/6/2016		

10/6/2016
8:49:51 AM
...\CADD\SHEETS\EVEC1*AM*04.dgn

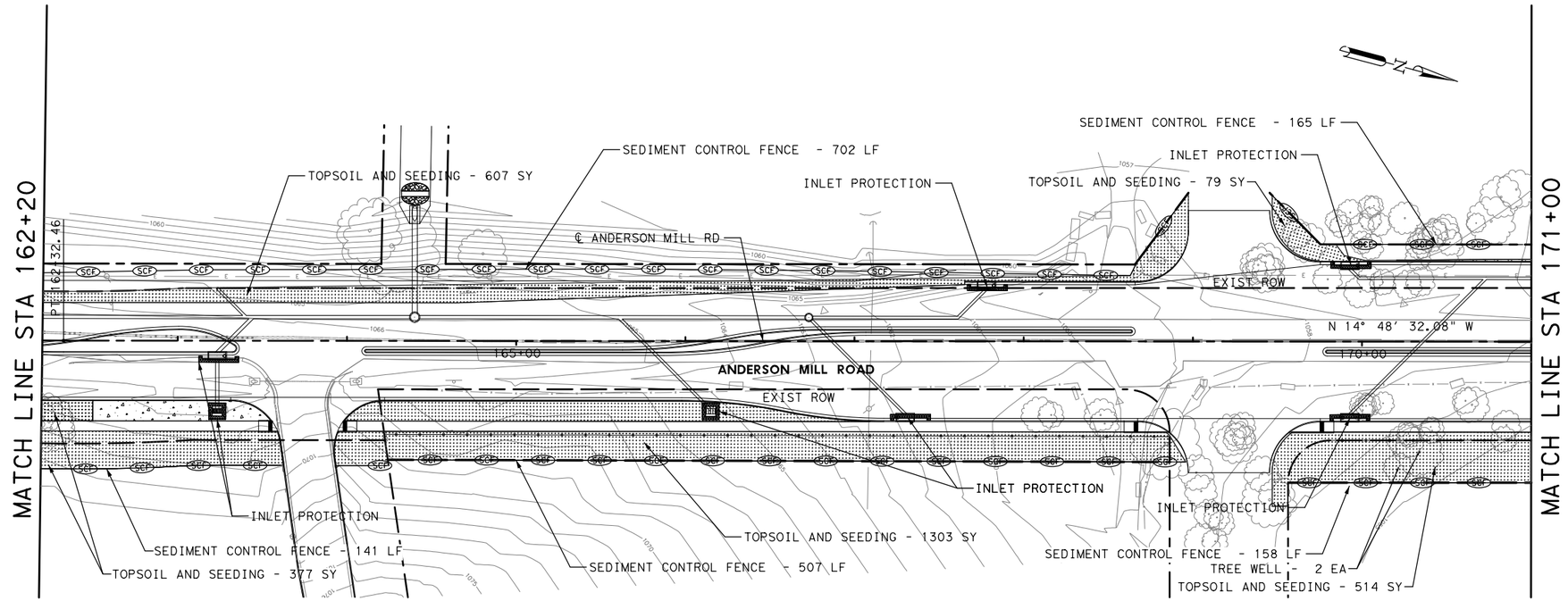

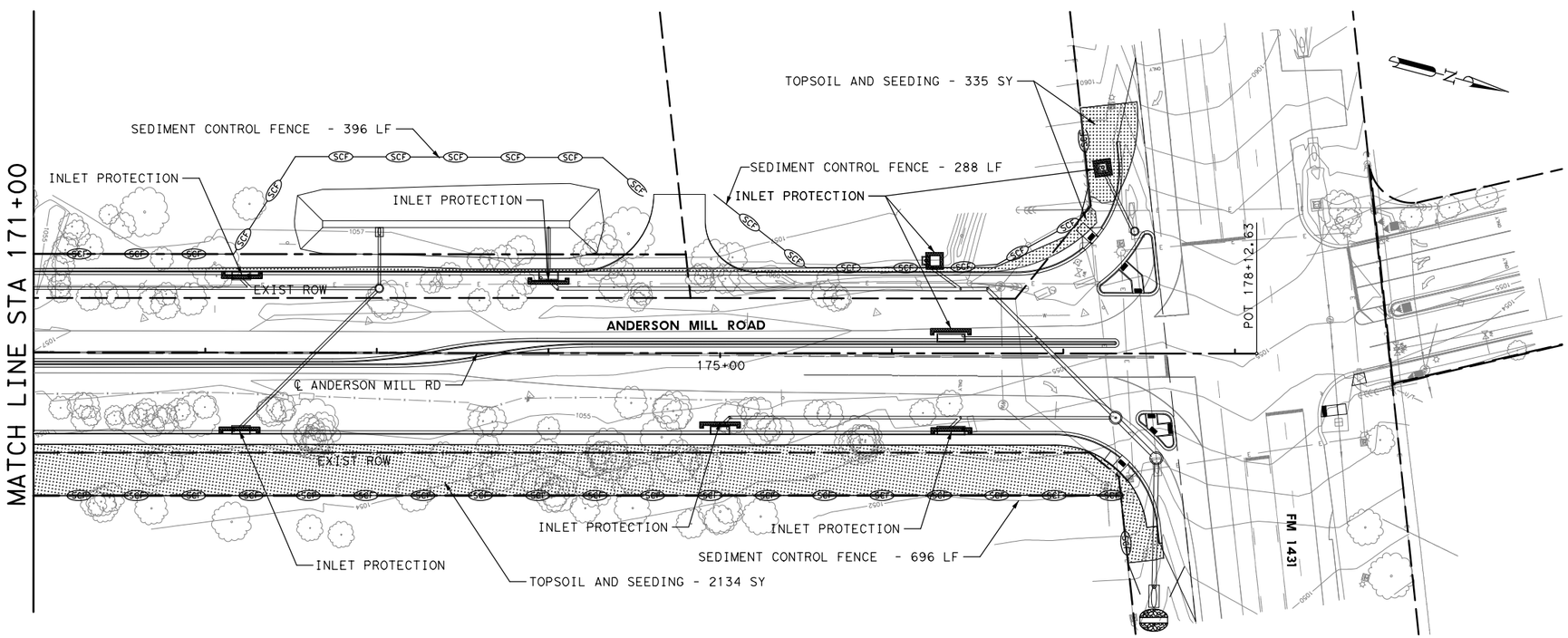

0' 10' 20' 40'

SCALE: 1"=40'

LEGEND

- ROCK BERM
- SCF — SEDIMENT CONTROL FENCE
- STORM INLET PROTECTION
- TOPSOIL AND SEEDING
- SOIL RETENTION BLANKET

EROSION AND SEDIMENTATION CONTROL NOTES:

1. EROSION CONTROL MEASURES, SITE WORK, AND RESTORATION WORK SHALL BE IN ACCORDANCE WITH THE CITY OF CEDAR PARK'S SUBDIVISION CODE AND CITY OF AUSTIN SPECIFICATIONS, EXCEPT AS NOTED BELOW AND APPROVED BY CITY COUNCIL.

2. SLOPES SHALL BE SODDED OR SEEDED WITH THE APPROPRIATE GRASS, GRASS MIXTURES, OR GROUND COVER SUITABLE TO THE AREA AND SEASON TO WHICH THEY ARE APPLIED.

3. SILT FENCES, ROCK BERMS, AND SIMILARLY RECOGNIZED TECHNIQUES AND MATERIALS SHALL BE EMPLOYED DURING CONSTRUCTION TO PREVENT POINT SOURCE SEDIMENTATION LOADING OF DOWNSTREAM FACILITIES. SUCH INSTALLATION SHALL BE REGULARLY INSPECTED BY THE CITY OF CEDAR PARK FOR EFFECTIVENESS. ADDITIONAL MEASURES MAY BE REQUIRED IF, IN THE OPINION OF THE CITY ENGINEER, THEY ARE WARRANTED.

4. ALL TEMPORARY EROSION CONTROL MEASURES SHALL NOT BE REMOVED UNTIL FINAL INSPECTION AND APPROVAL OF THE PROJECT BY THE ENGINEER.

5. IT SHALL BE THE REPONSIBILITY OF THE CONTRACTOR TO MAINTAIN ALL TEMPORARY EROSION CONTROL STRUCTURES AND TO REMOVE EACH STRUCTURE AS APPROVED BY THE ENGINEER.

NUMBER	DATE	REVISION	APPROVED

STATE OF TEXAS
GREGORY C. CALKINS
111309
LICENSED
PROFESSIONAL ENGINEER
10/06/2016

CEDAR PARK

Binkley & Barfield, Inc
consulting engineers
Texas Registration Number F-257

ANDERSON MILL ROAD
GASPAR BEND TO WHITESTONE BLVD
EROSION CONTROL PLANS

STA 162+20 - END PROJECT

DESIGN BY:	GCC	SCALE: 1"=40'
DRAWN BY:	DSH	
CHECKED BY:	DRE	
APPROVED BY:	BDR	SHEET: 5 OF 5
PROJECT NO:	156402	
DATE:	10/6/2016	PAGE: 175

10/6/2016
8:49:55 AM
...\CADD\SHEETS\EVEC1*AM*05.dgn

FILENAME: K:\AUS*TPTO\067783504 - Anderson Mill & 1431\DESIGN\ANDERSONsig01.dgn
PLOTTED: 10/3/2016 10:09:17 AM

EXISTING SIGN S6

EXISTINGSIGN S3

EXISTING SIGN S4

EXISTING SIGN S1

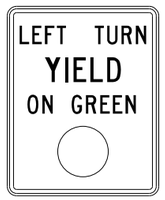

EXISTING SIGNS S2, S5

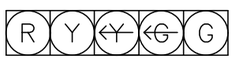

HEADS 4, 9

HEADS 1, 7

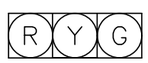

HEADS 2, 3, 5, 6, 8, 10, 11

ORIENTATION VIEW

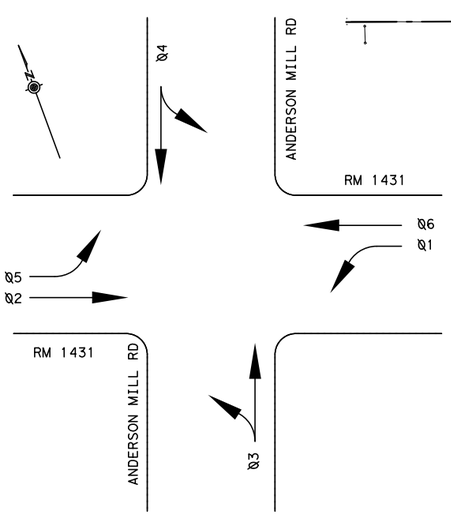

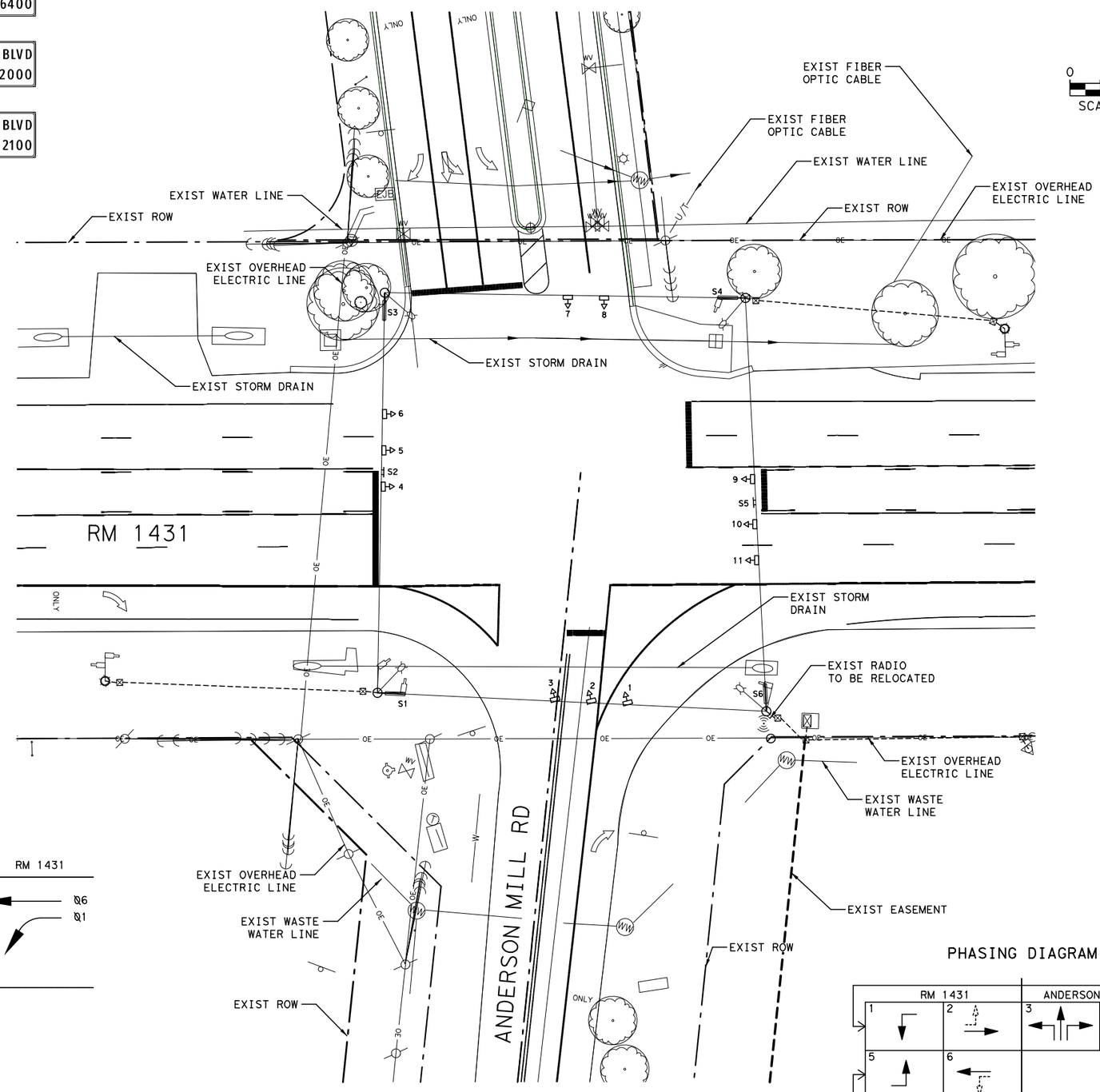

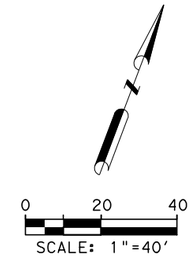

LEGEND

G	EXIST GAS LINE
OE	EXIST OVERHEAD ELECTRIC
FOC	EXIST FIBER OPTIC CABLE
SD	EXIST STORM DRAIN
W	EXIST WATER LINE
WW	EXIST WASTE WATER LINE
	FENCE LINE
	FIRE HYDRANT
	EXIST SIGN
	EXIST SIGNAL HEAD
	EXIST SPAN WIRE CABLE
	EXIST VIVDS CAMERA
	EXIST ELECTRICAL SERVICE
	EXIST LUMINAIRE
	EXIST CONDUIT
	EXIST PULL BOX
	EXIST SIGNAL CONTROLLER
	EXIST RADIO
	EXIST ILSN SIGN

NOTES:
1. LOCATIONS OF UNDERGROUND UTILITIES ARE APPROXIMATE. CONTRACTOR SHALL CALL "TEXAS ONE CALL" (800-245-4545) PRIOR TO EXCAVATION. TRENCHING IN THE VICINITY OF UNDERGROUND UTILITIES SHALL BE HAND DUG TO AVOID DAMAGE.

PHASING DIAGRAM

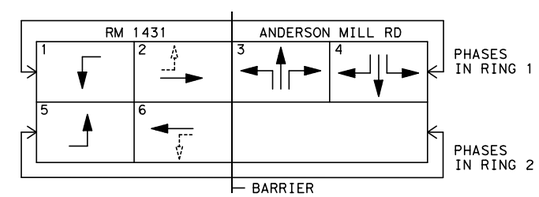

STATE OF TEXAS
BRIAN DAVID VAN DE WALLE
68525
REGISTERED PROFESSIONAL ENGINEER

10/3/2016

Kimley»Horn
F-928

CEDAR PARK

© 2016 CITY OF CEDAR PARK

ANDERSON MILL AND RM 1431
TRAFFIC SIGNAL

EXISTING SIGNAL LAYOUT

SHEET 1 OF 5

DES: RPO	CEDAR PARK JOB NO. 067783504	SHEET NO.
CK: BDV		176

FILENAME: K:\AUS*TPTO\067783504 - Anderson Mill & 1431\DESIGN\ANDERSONsig02.dgn
PLOTTED: 10/3/2016 10:09:29 AM

NOTES:
1. CONTRACTOR SHALL BE RESPONSIBLE FOR RETURNING EXISTING SIGNAL CONTROLLER, VIVDS EQUIPMENT, AND OTHER SIGNAL EQUIPMENT TO THE CITY OF CEDAR PARK.
2. EXACT LOCATION OF POLES WILL BE DETERMINED IN THE FIELD SUBJECT TO FINAL APPROVAL BY INSPECTING ENGINEER. IT IS THE CONTRACTOR'S RESPONSIBILITY TO VERIFY THE EXACT LOCATION WITH THE INSPECTING ENGINEER PRIOR TO DRILLING OR EXCAVATION.
3. LOCATIONS OF UNDERGROUND UTILITIES ARE APPROXIMATE. CONTRACTOR SHALL CALL "TEXAS ONE CALL" (800-245-4545) PRIOR TO EXCAVATION. TRENCHING IN THE VICINITY OF UNDERGROUND UTILITIES SHALL BE HAND DUG TO AVOID DAMAGE.
4. INSTALL CONDUIT RUNS 5,7,10,12 AT A MINIMUM DEPTH OF 36" TO AVOID DAMAGE BY FUTURE CONSTRUCTION ACTIVITIES.
5. CITY OF CEDAR PARK WILL FURNISH AND CONFIGURE ALL VIVDS EQUIPMENT. VEHICLE DETECTION WILL BE BY HYBRID VIVD/RADAR UNIT. INSTALL SPARE CAT5E CABLE TO END OF MAST ARM ON POLES A1 AND C1 FOR FUTURE USE.
6. ILLUMINATION ANGLE SHOWN IS DIAGRAMATIC. INSTALL LUMINAIRE HEADS PERPENDICULAR TO ROADWAY.
7. STUB OUT 2 - 2" PVC CONDUITS FOR FUTURE COMMUNICATIONS USE. INSTALL A LOCATOR PIPE.
8. INSTALL NEW TRAFFIC SIGNAL CABINET. PROVIDE EQUIPMENT FOR BATTERY BACKUP UNIT (TO BE INSTALLED BY CITY).
9. CITY OF CEDAR PARK WILL MAINTAIN AND OPERATE SIGNAL DURING CONSTRUCTION EXCEPT TO REPAIR DAMAGE CAUSED BY CONTRACTOR OR SUBCONTRACTOR. CITY STAFF MUST BE NOTIFIED IN ADVANCE OF ANY TRAFFIC SWITCHES.

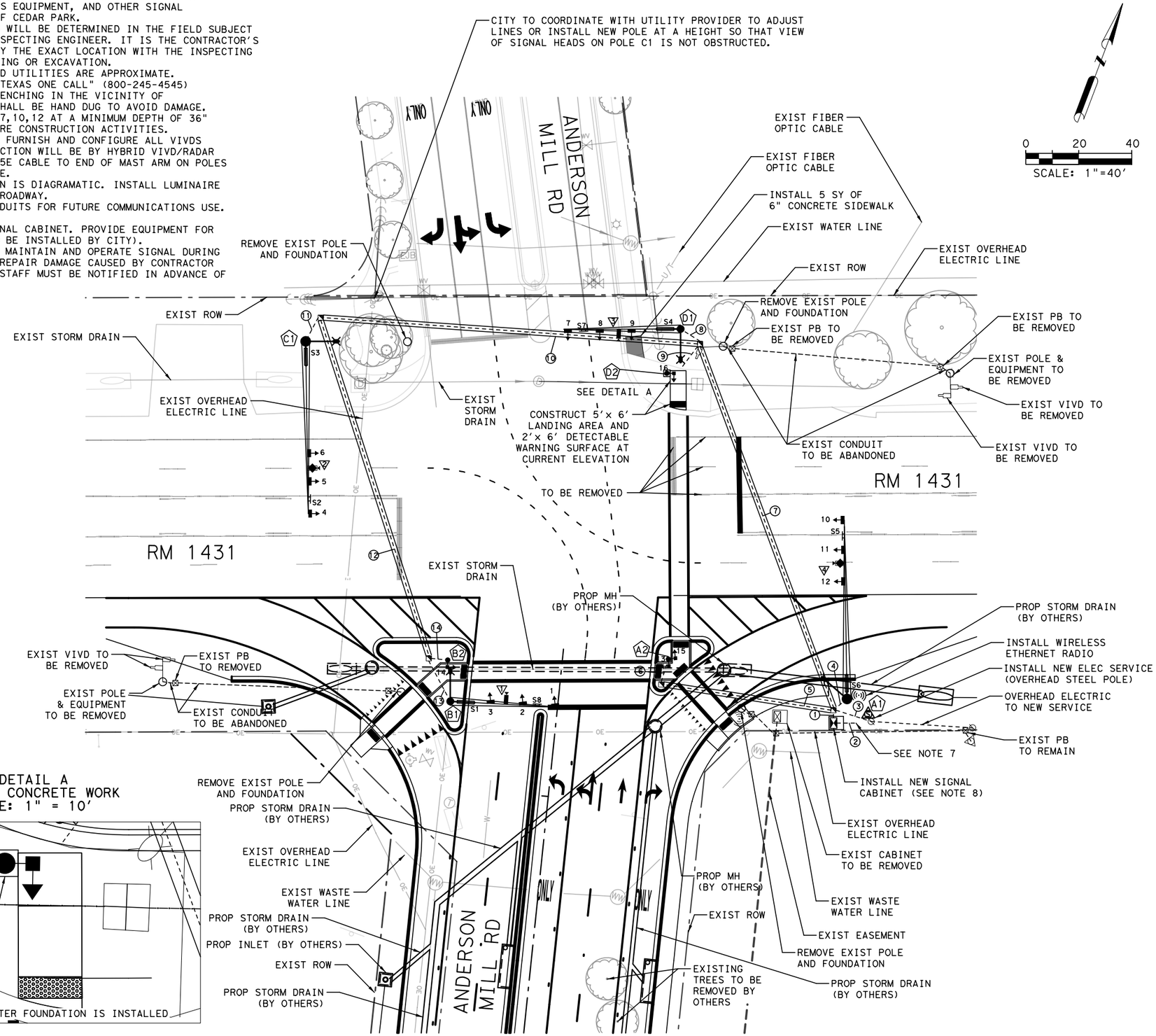

0 20 40
SCALE: 1"=40'

LEGEND

- STRAIN POLE
- SIGNAL HEAD & LABEL
- VIVDS CAMERA
- VIVDS/RADAR HYBRID CAMERA
- ELECTRICAL SERVICE
- SIGNAL CABINET
- TYPE A GROUND BOX
- TYPE D GROUND BOX
- ILSN SIGN
- RADIO
- CONDUIT-TRENCHED
- CONDUIT-BORED
- EXISTING CONDUIT
- SIGNAL POLE LABEL
- VIVDS LABEL
- CONDUIT LABEL
- LUMINAIRE
- PROP SIGN
- G — EXIST GAS LINE
- OE — EXIST OVERHEAD ELECTRIC
- SD — EXIST STORM SEWER
- W — EXIST WATER LINE
- WW — EXIST WASTE WATER LINE
- FIRE HYDRANT
- VALVE
- RIGHT OF WAY
- FENCE LINE
- PROP MH (BY OTHERS)
- PROP INLET (BY OTHERS)
- SAFETY END TREATMENT

DETAIL A
POLE D2 CONCRETE WORK
SCALE: 1" = 10'

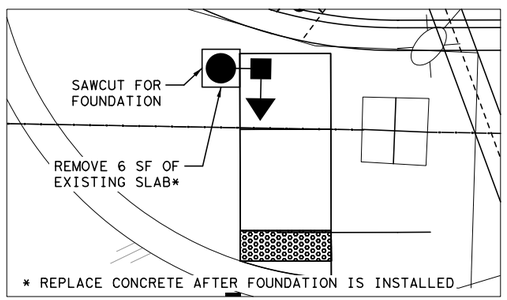

STATE OF TEXAS
BRIAN DAVID VAN DE WALLE
68525
REGISTERED PROFESSIONAL ENGINEER

10/3/2016

Kimley»Horn
F-928

CEDAR PARK

© 2016 CITY OF CEDAR PARK

ANDERSON MILL AND RM 1431
TRAFFIC SIGNAL

PROPOSED SIGNAL LAYOUT

SHEET 2 OF 5

DES: RPO	CEDAR PARK JOB NO. 067783504	SHEET NO.
CK: BDV		177

FILENAME: K:\AUS*TPTO\067783504 - Anderson Mill & 1431\DESIGN\ANDERSONsig03.dgn
PLOTTED: 10/3/2016 10:09:31 AM

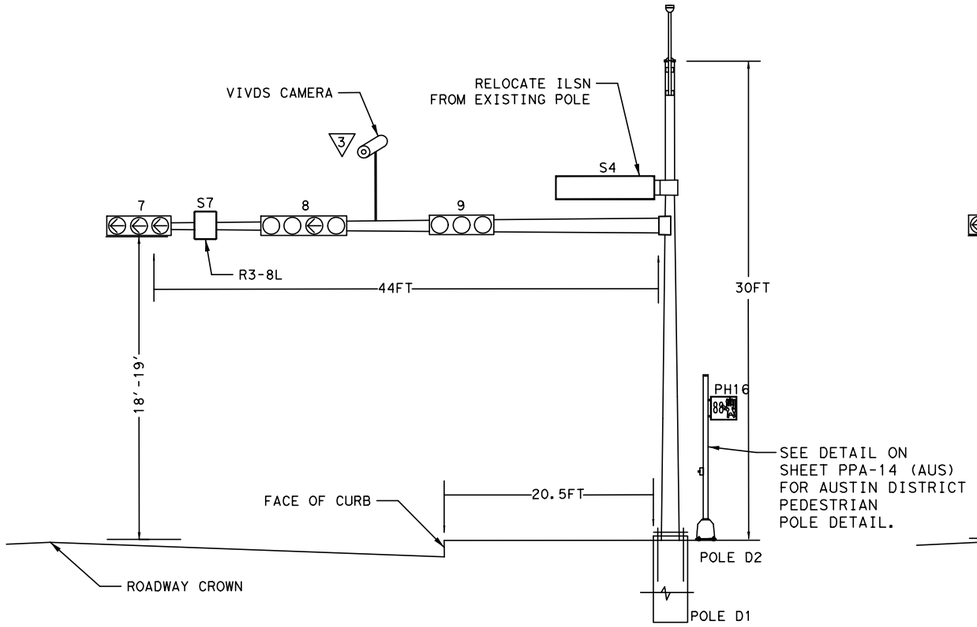

ANDERSON MILL RD LOOKING NORTH

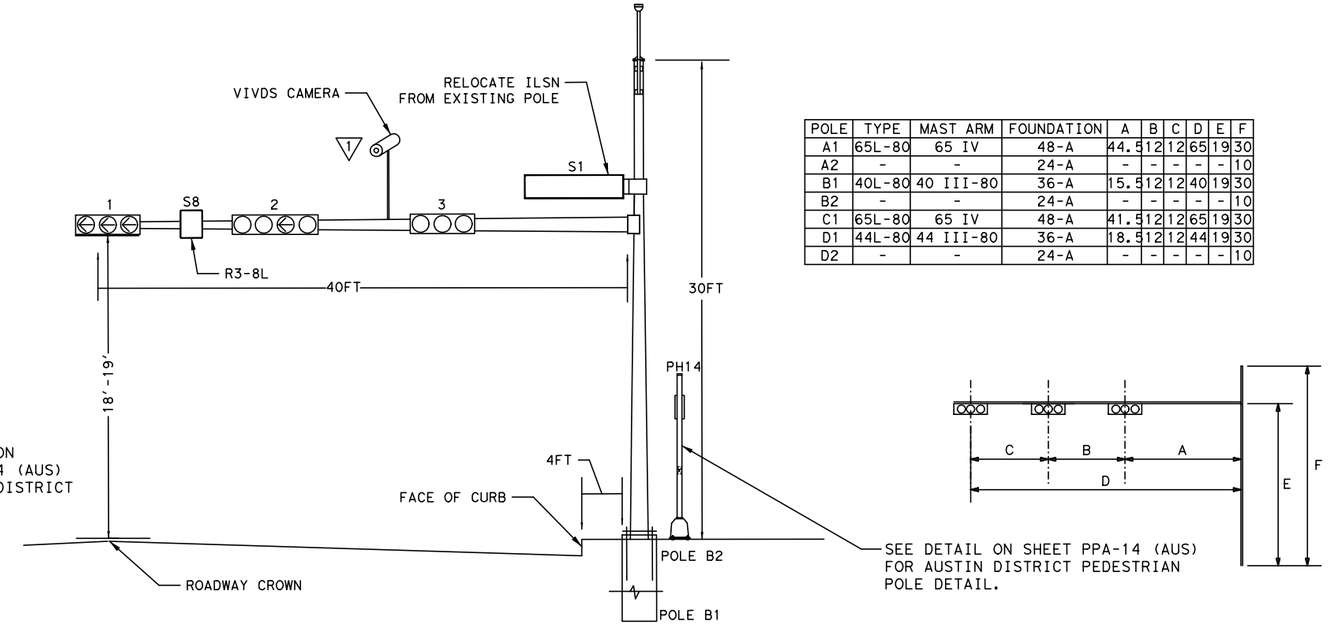

ANDERSON MILL RD LOOKING SOUTH

POLE	TYPE	MAST ARM	FOUNDATION	A	B	C	D	E	F
A1	65L-80	65 IV	48-A	44.5	12	12	65	19	30
A2	-	-	24-A	-	-	-	-	-	10
B1	40L-80	40 III-80	36-A	15.5	12	12	40	19	30
B2	-	-	24-A	-	-	-	-	-	10
C1	65L-80	65 IV	48-A	41.5	12	12	65	19	30
D1	44L-80	44 III-80	36-A	18.5	12	12	44	19	30
D2	-	-	24-A	-	-	-	-	-	10

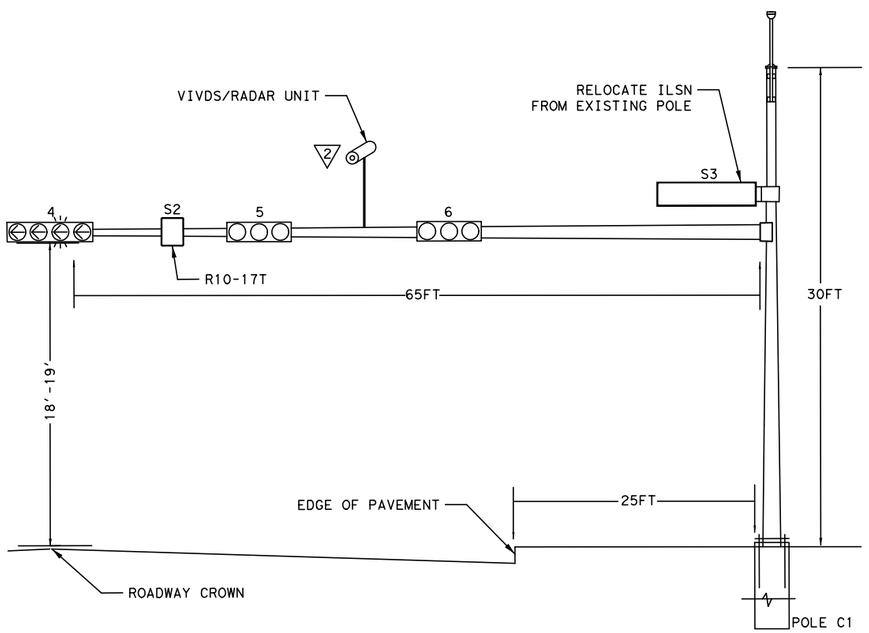

RM 1431 LOOKING WEST

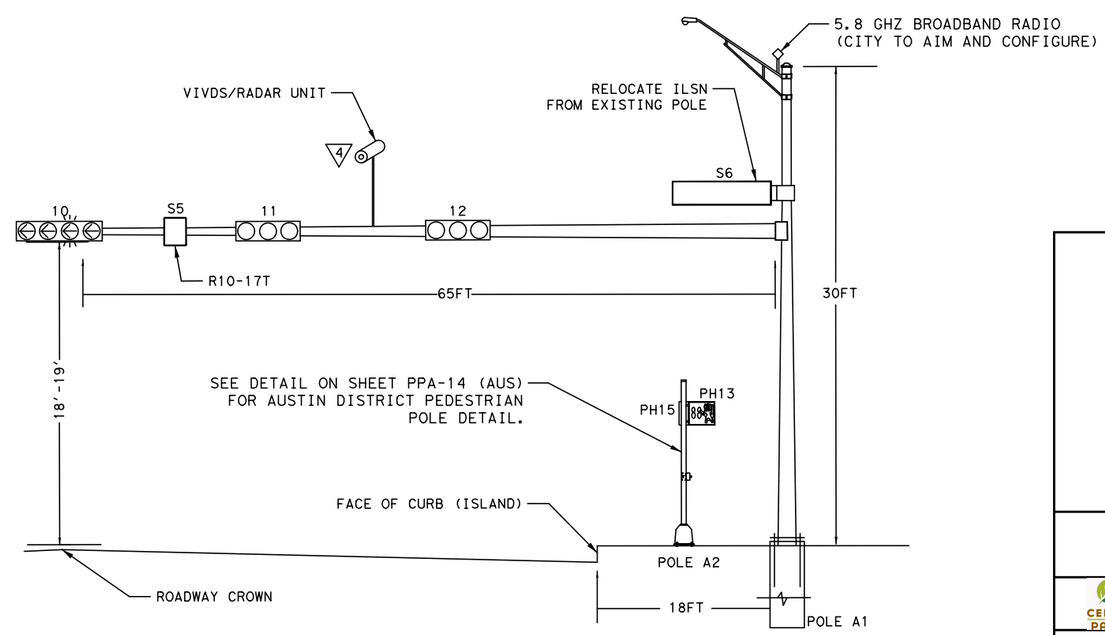

RM 1431 LOOKING EAST

NOTES:
1. INSTALL ALL SIGNAL POLES WITH LUMINAIRES AND PEDESTRIAN POLES IN PHASE 1 OF SIGNAL CONSTRUCTION.
2. INSTALL ALL MAST-ARMS, SIGNAL HEADS, PUSH BUTTONS, VIVD CAMERAS IN PHASE 1 OF SIGNAL CONSTRUCTION.
3. CITY OF CEDAR PARK WILL MAINTAIN AND OPERATE SIGNAL DURING CONSTRUCTION EXCEPT TO REPAIR DAMAGE CAUSED BY CONTRACTOR OR SUBCONTRACTOR. CITY STAFF MUST BE NOTIFIED IN ADVANCE OF ANY TRAFFIC SWITCHES.
4. ALL PED-HEADS & PUSH BUTTONS SHALL BE AUDIBLE PED SIGNAL UNITS WITH LED COUNTDOWN DISPLAYS.
5. THE FOUNDATION FOR THE PEDESTRIAN POLE ASSEMBLY SHALL BE A TXDOT FOUNDATION TYPE 24-A. CONSTRUCT SIGNAL AND PEDESTRIAN POLE FOUNDATIONS AND GROUND BOXES TO BE AT GRADE WITH FUTURE ISLANDS.
6. FOR ILSNS, CONTRACTOR WILL FURNISH NEW ARM TO ENSURE CLAMP FITS SIGNAL POLE.
7. ADJUST TOP OF SIGNAL POLE FOUNDATIONS TO BE LEVEL WITH FUTURE GROUND ELEVATION.
8. ALL BREAKAWAY ELECTRICAL CONNECTORS FOR BREAKAWAY POLES SHALL BE NON-FUSED AND WATER TIGHT (BUCHANNAN, BUSSMANN HET, LITTELFUSE, FERRAZ-SHAWMUT GEBN, HMC INDUSTRIES, SDK-MDL OR APPROVED EQUAL).
9. THREADED CONNECTOR, ALL T-BASE THREADS MUST BE ENGAGED ONTO PIPE OR THE PIPE SHALL BE FULLY SEATED INTO BASE AS PER MANUFACTURER'S RECOMMENDATIONS. A POLE AND BASE COLLAR ASSEMBLY SHALL BE USED TO ADD STRENGTH AND PREVENT LOOSENING OF CONNECTION IN HIGH WINDS.
10. 5.8 GHZ BROADBAND RADIO WITH INTEGRATED ANTENNA SHALL BE COMPATIBLE WITH EXISTING CITY COMMUNICATION EQUIPMENT.

STATE OF TEXAS
BRIAN DAVID VAN DE WALLE
68525
REGISTERED PROFESSIONAL ENGINEER

10/3/2016

Kimley»Horn
F-928

© 2016 CITY OF CEDAR PARK

ANDERSON MILL AND RM 1431
TRAFFIC SIGNAL

SIGNAL ELEVATION

SHEET 3 OF 5

DES: RPO	CEDAR PARK JOB NO. 067783504	SHEET NO.
CK: BDV		178

CABLE TERMINATION CHART

STATUS		INSTALL	INSTALL	INSTALL	INSTALL	INSTALL	INSTALL	INSTALL	INSTALL	INSTALL	INSTALL	INSTALL	INSTALL	INSTALL *	INSTALL *	INSTALL	INSTALL	INSTALL	INSTALL	INSTALL *	INSTALL *
CNDR NO.	CONDUCTOR COLOR	CABLE 1 5 CNDR FROM A1 TO CNTRL	CABLE 2 7 CNDR FROM A1 TO CNTRL	CABLE 3 2 CNDR FROM A2 TO CNTRL	CABLE 4 2 CNDR FROM A2 TO CNTRL	CABLE 5 5 CNDR FROM A2 TO CNTRL	CABLE 6 5 CNDR FROM A2 TO CNTRL	CABLE 7 5 CNDR FROM B1 TO CNTRL	CABLE 8 7 CNDR FROM B1 TO CNTRL	CABLE 9 2 CNDR FROM B2 TO CNTRL	CABLE 10 5 CNDR FROM B2 TO CNTRL	CABLE 11 5 CNDR FROM C1 TO CNTRL	CABLE 12 7 CNDR FROM C1 TO CNTRL	CABLE 13 2 CNDR FROM C1 BOX TO CNTRL	CABLE 14 5 CNDR FROM C1 BOX TO CNTRL	CABLE 15 5 CNDR FROM D1 TO CNTRL	CABLE 16 7 CNDR FROM D1 TO CNTRL	CABLE 17 2 CNDR FROM D2 TO CNTRL	CABLE 18 5 CNDR FROM D2 TO CNTRL	CABLE 19 2 CNDR FROM D2 TO CNTRL	CABLE 20 5 CNDR FROM D2 TO CNTRL
1	BLACK	SH 11,12 Y PHASE 02	SH 10 Y ARROW OVL 5	PED CALL PHASE 02	PED CALL PHASE 03	SPARE	SPARE	SH 2,3 Y PHASE 04	SH 1 Y ARROW PHASE 04	PED CALL PHASE 02	SPARE	SH 5,6 Y PHASE 06	SH 4 Y ARROW OVL 1	SPARE	SPARE	SH 8,9 Y PHASE 03	SH 7 Y ARROW PHASE 03	PED CALL PHASE 03	SPARE	SPARE	SPARE
2	WHITE	SH COM	SH COM	PED COM	PED COM	PED COM	PED COM	SH COM	SH COM	PED COM	PED COM	SH COM	SH COM	SPARE	SPARE	SH COM	SH COM	PED COM	PED COM	SPARE	SPARE
3	RED	SH 11,12 R PHASE 02	SH 10 R ARROW OVL 5	NA	NA	P2 PH13 DW PHASE 02	P3 PH15 DW PHASE 03	SH 2,3 R PHASE 04	SH 1 R ARROW PHASE 04	NA	P1 PH14 DW PHASE 02	SH 5,6 R PHASE 06	SH 4 R ARROW OVL 1	NA	SPARE	SH 8,9 R PHASE 03	SH 7 R ARROW PHASE 03	NA	P4 PH16 DW PHASE 03	NA	SPARE
4	GREEN	SH 11,12 G PHASE 02	SH 10 G ARROW PHASE 05	NA	NA	P2 PH13 W PHASE 02	P3 PH15 W PHASE 03	SH 2,3 G PHASE 04	SH 1 G ARROW PHASE 04	NA	P1 PH14 W PHASE 02	SH 5,6 G PHASE 06	SH 4 G ARROW PHASE 01	NA	SPARE	SH 8,9 G PHASE 03	SH 7 G ARROW PHASE 03	NA	P4 PH16 W PHASE 03	NA	SPARE
5	ORANGE	SPARE	SH 10 Y ARROW FLASHING OVL 5	NA	NA	SPARE	NA	SPARE	SPARE	NA	SPARE	SPARE	SH 4 Y ARROW FLASHING OVL 1	NA	SPARE	SPARE	SPARE	NA	NA	NA	SPARE
6	BLUE	NA	SPARE	NA	NA	NA	NA	NA	SPARE	NA	NA	NA	SPARE	NA	NA	NA	SPARE	NA	NA	NA	NA
7	WHITE/BLACK	NA	SPARE	NA	NA	NA	NA	NA	SPARE	NA	NA	NA	SPARE	NA	NA	NA	SPARE	NA	NA	NA	NA

* NOTE: CABLE RUNS TO BE INSTALLED FOR FUTURE PUSH BUTTONS AND PED HEAD EQUIPMENT AT FUTURE CROSSINGS. LEAVE 25' OF COILED CABLE IN EACH PULL BOX FOR EACH CABLE.

CONDUIT AND CABLE CHART
WIRE SIZE AND TYPE

RUN NO	ACTION	ITEM 618 CONDUIT SIZE AND TYPE				ACTION	ITEM 620 ELECTRICAL CONDUCTORS				ITEM 684 SIGNAL CABLE TYPE A				ITEM 6089 CAT5 ETHERNET	ITEM 6002 VIVDS COMPOSITE COAX + 3/C #16	LENGTH OF RUN	RUN NO
		2" PVC (TRENCHED)	2" PVC (BORED)	3" PVC (TRENCHED)	3" PVC (BORED)		NO. 6 BARE	NO. 6 INSULATED	NO. 8 BARE	NO. 8 INSULATED	3 CNDR NO. 12	2 CNDR NO. 14	5 CNDR NO. 14	7 CNDR NO. 14				
1	I	2		2		I	1	2	3		4	6	10	4	5	4	15	1
2	I	2				I			2								20	2
3	I	2				I	1	2	1	8	4						60	3
4	I	2		1		I			3	2	1		1	1	2	1	15	4
5	I		2		1	I			3			2	2				70	5
6	I	2				I			2			2	2				15	6
7	I		1		2	I			3	6	3	4	7	3	3	3	160	7
8	I	2		1		I			3	2	1		1	1	1	1	15	8
9	I	2				I			2			2	2				15	9
10	I		1		2	I			3	4	2	2	4	2	2	2	150	10
11	I	2		1		I			3	2	1		1	1	1	1	40	11
12	I		1		2	I			3	2	1	1	2	1	1	1	150	12
13	I	2		1		I			3	2	1		1	1	1	1	20	13
14	I	2				I			2			1	1				20	14
SPARE	(IN FEET)											50	50		50		N/A	SPARE
TOTAL	(IN FEET)	470	600	120	990		75	150	2105	2520	1320	1450	2530	1080	1160	1080		

ACTION CODES: I - INSTALL, E - EXISTING
*INSTALL SPARE CAT 5E TO END OF EACH MAST ARM

INSIDE POLES	NO. 8 INSULATED	12 AWG	14 AWG			VIVDS	CAT 5E
		3/C	2/C	5/C	7/C	COAX COMPOSITE	
A1	80	25	-	40	20	20	60
A2	-	-	10	20	-	-	-
B1	80	25	-	40	20	20	30
B2	-	-	10	10	-	-	-
C1	80	25	-	40	20	20	30
D1	80	25	-	40	20	20	30
D2	-	-	10	10	-	-	-
TOTAL	320	100	30	200	80	80	150

INSIDE ARMS	14 AWG		VIVDS	CAT 5E
	5/C	7/C	COAX COMPOSITE	
A1	105	70	60	60
A2				
B1	45	45	35	35
B2				
C1	100	70	60	60
D1	50	50	35	35
D2				
TOTAL	300	235	190	190

FIELD OUTPUT TERMINATION ASSEMBLY

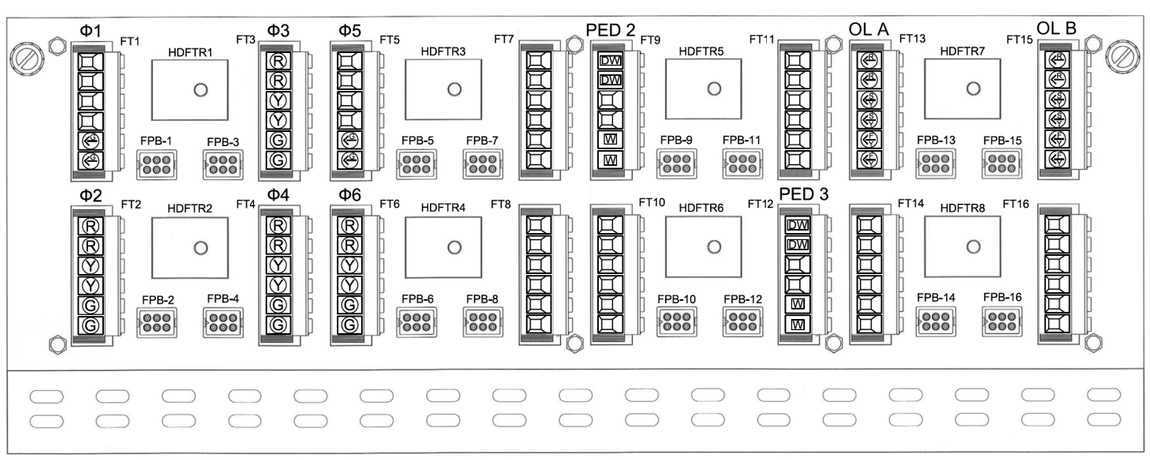

FIELD OUTPUT TERMINATION ASSEMBLY
RM 1431 AT ANDERSON MILL RD

STATE OF TEXAS
BRIAN DAVID VAN DE WALLE
68525
REGISTERED PROFESSIONAL ENGINEER

10/3/2016

Kimley»Horn
F-928

CEDAR PARK

© 2016 CITY OF CEDAR PARK

ANDERSON MILL AND RM 1431
TRAFFIC SIGNAL

CONDUITS AND WIRING

SHEET 4 OF 5

DES: RPO	CEDAR PARK JOB NO. 067783504	SHEET NO.
CK: BDV		179

SIGN S6

SIGN S3

SIGN S4

SIGN S1

S7, S8

R3-8L
(30"X30")

S2, S5

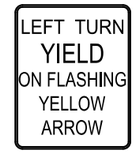

R10-17T
(36"x42")

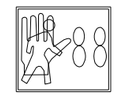

LED COUNTDOWN PED
SIGNAL HEADS 13,14,15,16

PEDESTRIAN SIGN DETAIL	
POLE	SIGN
A1	NONE
A2	R10-3eR, R10-3eL
B1	NONE
B2	R10-3eR
C1	NONE
D1	NONE
D2	R10-3eR

SIGN R10-3eL

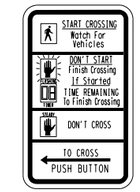

SIGN R10-3eR

COUNTDOWN PEDESTRIAN
PUSH BUTTON SIGN DETAILS

9"X15" SIGN FOR SIGNAL POLE
5"X7" SIGN FOR PEDESTRIAN POLE

APS MESSAGE INFORMATION			
APS UNIT	ACKNOWLEDGEMENT DEFAULT WAIT	EXTENDED PRESS MESSAGE	WALK PHASE MESSAGE
		WAIT TO CROSS (STREET NAME) AT (CROSS STREET NAME)	(STREET NAME) WALK SIGN IS ON TO CROSS, (STREET NAME) OR TONE
A2	YES	ANDERSON MILL AT WHITESTONE	ANDERSON MILL
B2	YES	ANDERSON MILL AT WHITESTONE	ANDERSON MILL
A2	YES	WHITESTONE AT ANDERSON MILL	WHITESTONE
D2	YES	WHITESTONE AT ANDERSON MILL	WHITESTONE

NOTE:
RELOCATE EXISTING SIGNS TO NEW POLES. FURNISH NEW ARMS AND HARDWARE TO ENSURE PROPER FIT ON NEW SIGNAL POLES.

PHASING DIAGRAM

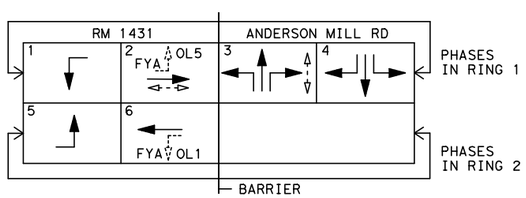

OL1 = Ø2
OL5 = Ø6

ORIENTATION VIEW

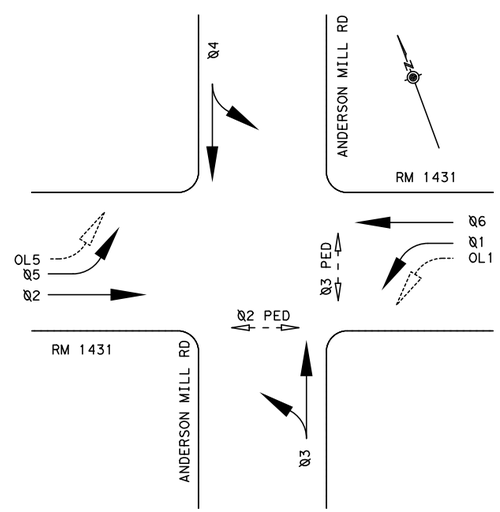

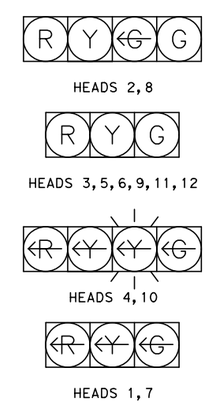

(BACKPLATES & HANGERS NOT SHOWN)

STATE OF TEXAS
BRIAN DAVID VAN DE WALLE
68525
REGISTERED PROFESSIONAL ENGINEER

10/3/2016

Kimley»Horn
F-928

CEDAR PARK

© 2016 CITY OF CEDAR PARK

ANDERSON MILL AND RM 1431
TRAFFIC SIGNAL

PHASING AND SIGNS

SHEET 5 OF 5

DES: RPO	CEDAR PARK	SHEET NO.
CK: BDV	JOB NO. 067783504	180

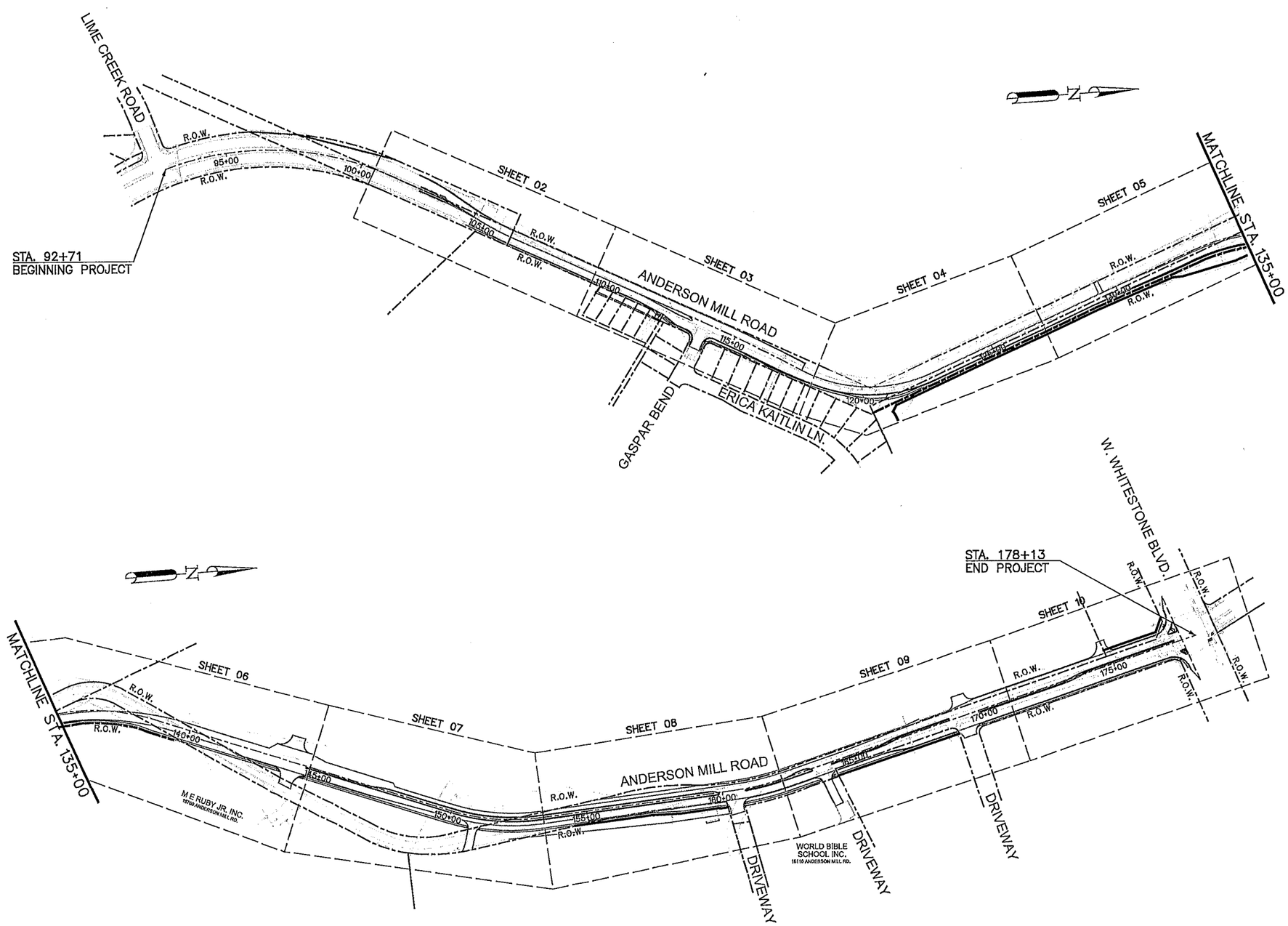

NOTES:

1. ALL STATIONING BASED ON CENTERLINE OF ANDERSON MILL RD UNLESS OTHERWISE NOTED.
2. CENTER OF THE POLE FOUNDATIONS SHALL BE A MINIMUM OF 2 FEET BEHIND BACK OF CURB OR FROM EDGE OF SIDEWALK.
3. DESIGN IS BASED ON THE USE OF 160 WATT LEO FIXTURES AND 240 VOLT SERVICE TO BE PROVIDED BY PEC.
4. NEW MAST ARMS AND FIXTURES W/ POWER SUPPLY TO BE PROVIDED BY PEC WHEN EXISTING POWER POLES ARE USED TO HANG STREET LIGHTS.
5. NEW STREET POLES WITH MAST ARMS ARE TO BE SUPPLIED BY THE CONTRACTOR. THIS INCLUDES PULL BOXES, CONDUIT, AND CONDUCTOR. THE FIXTURES ARE SUPPLIED AND MAINTAINED BY PEC.
6. NEW POWER POLES AND OVER HEAD LINE DESIGN AND INSTALLATION WILL BE COMPLETED BY SEPARATE CONTRACT.
7. REPLACEMENT OR RELOCATION OF EXISTING POWER POLES AND OVERHEAD LINE IS NOT A PART OF THIS CONTRACT.

NUMBER	DATE	REVISION	APPROVED

CEDAR PARK

Binkley &Barfield, Inc.
consulting engineers
Texas Registration Number F-257
1710 Seamist Drive
Houston, Texas 77008-3189
(713) 869-3433 (713) 869-6702 FAX

SEAL
STATE OF TEXAS
KEVIN LEE PRAYTOR
121834
LICENSED PROFESSIONAL ENGINEER
10/5/16

ANDERSON MILL ROAD
GASPAR BEND TO WHITESTONE BLVD

ILLUMINATION OVERALL LAYOUT

DESIGN BY:	KWR	SCALE:	1" =200'
DRAWN BY:	FJR		
CHECKED BY:	DRE	SHEET:	1 OF 13
APPROVED BY:	BDR		
PROJECT NO:	156402	PAGE:	181
DATE:	10/5/2016		

U:\156402_Anderson Mill Rd Illumination\CAD\11\11 A OVRL 181.dgn 10/5/2016 4:17:59 PM FJR
Half PDF Letter.pit
Electric_pen.tbl

POLE DESIGNATION LEGEND:

MAST ARMS (S=SINGLE, D=DOUBLE, R=RELOCATION)
POLE NUMBER
POLE TYPE (EP=EXISTING POLE, NP=NEW POWER POLE– BY OTHERS, SP=NEW STREET LIGHT POLE– BY CONTRACTOR)

0' 20' 40' 80'
SCALE: 1"=80'

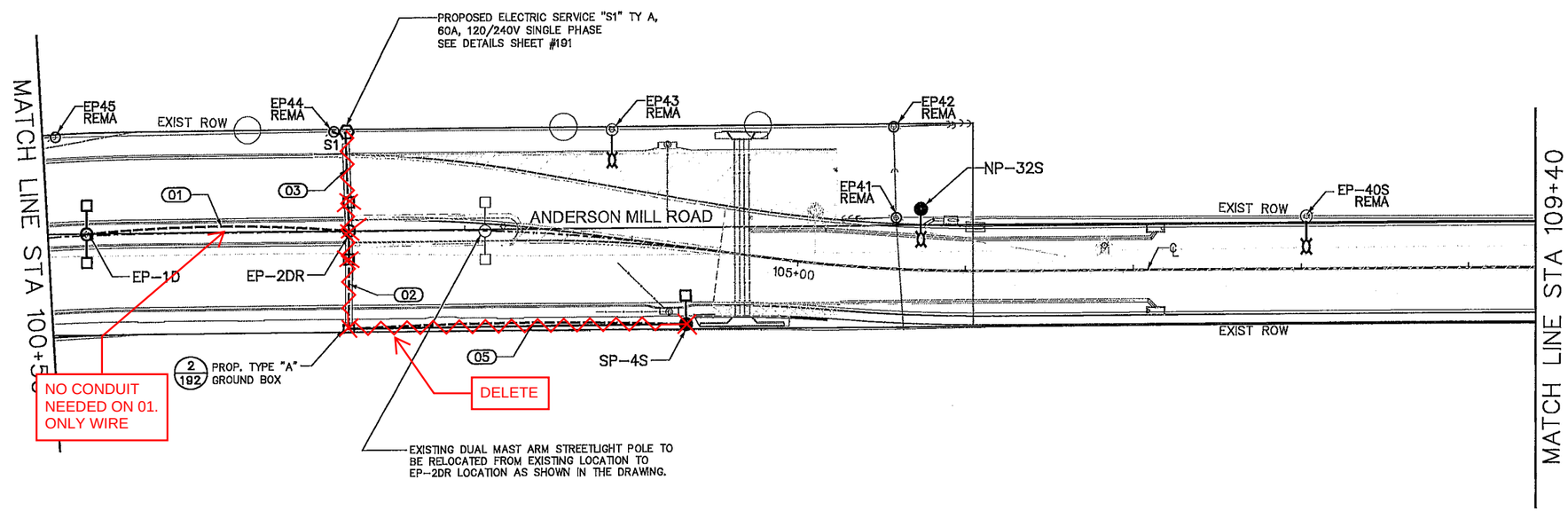

LEGEND

- PVC (SCH 40) OR RMC AND CONDUIT RUN NUMBER
- 2" PVC (SCH 80) BORED
- EXISTING POWER POLE WITH LED FIXTURE (RFM .16kW S)
- NEW POWER POLE WITH LED FIXTURE (RFM .16kW S)
- NEW STREET LIGHT POLE WITH LED FIXTURE (RFM .16kW S)
- NEW STREET LIGHT POLE WITH LED FIXTURE (RFM .16kW D)
- ELECTRICAL SERVICE
- PROPOSED GROUND BOX
- PULL BOX/GROUND BOX TY A 122311 (W/ Lid)
- (XX) CONDUIT RUN NO.
- NEW POLE LOCATION
- EXISTING POLE TO BE REMOVED
- EXISTING POLE REMAIN (REMA)

NOTES:

1. ALL STATIONING BASED ON CENTERLINE OF ANDERSON MILL RD UNLESS OTHERWISE NOTED.
2. CENTER OF THE POLE FOUNDATIONS SHALL BE A MINIMUM OF 2 FEET BEHIND BACK OF CURB OR FROM EDGE OF SIDEWALK.
3. DESIGN IS BASED ON THE USE OF 160 WATT LED FIXTURES AND 240 VOLT SERVICE TO BE PROVIDED BY PEC.
4. NEW MAST ARMS AND FIXTURES W/ POWER SUPPLY TO BE PROVIDED BY PEC WHEN EXISTING POWER POLES ARE USED TO HANG STREET LIGHTS.
5. NEW STREET POLES WITH MAST ARMS ARE TO BE SUPPLIED BY THE CONTRACTOR. THIS INCLUDES PULL BOXES, CONDUIT, AND CONDUCTOR. THE FIXTURES ARE SUPPLIED AND MAINTAINED BY PEC.
6. NEW POWER POLES AND OVER HEAD LINE DESIGN AND INSTALLATION WILL BE COMPLETED BY SEPARATE CONTRACT.
7. REPLACEMENT OR RELOCATION OF EXISTING POWER POLES AND OVERHEAD LINE IS NOT A PART OF THIS CONTRACT.

SUMMARY OF ILLUMINATION ASSEMBLIES

LED FIX						POLE			FIXTURE			
POLE NO.	PEC POLE ID	DESCRIPTION	STATION	OFFSET FROM CL	SIDE	POWER POLE EXIST	POWER POLE NEW	STREET LIGHT POLE	SINGLE=1 DUAL=2	ELECTRICAL SERVICE	ACTIVITY	kW
EP-1D		LED (RFM 0.16 kW)	100+21	0.0	CL			1	2	S1	R & FIX CON	0.32
EP-2DR		LED (RFM 0.16 kW)	102+31	0.0	CL			1	2	S1	R & FIX CON	0.32
EP-43		LED (RFM 0.16 kW)	103+41	57.9	LT				1	O/H Line	FIX INS. & CON.	0
SP-4S		LED (RFM 0.16 kW)	104+45	44.9	RT			1	1	S1	FIX INS. & CON.	0.16
NP-32S		LED (RFM 0.16 kW)	105+81	36.6	LT		1		1	O/H Line	FIX INS. & CON.	0.16
EP-40S		LED (RFM 0.16 kW)	108+03	31.6	LT	1			1	O/H Line	FIX INS. & CON.	0.16
		TOTAL				1	1	3	8			1.12

R= RELOCATION FIX CON.= FIXTURE CONNECTION

CONDUIT AND CABLE SCHEDULE

RUN NO.	SYSTEM	LENGTH (FEET)	NUMBER OF EACH: 2" PVC CONDUIT	#8 INSUL COND.	#8 GREEN COND.	#6 INSUL COND.	#6 GREEN COND.	REMARKS
1	S1	160	1	2	1			POLE BASE TO LUMINARE BY #10 AWG CABLE
2	S1	60	1	2	1			
3	S1	60	1	2	1			
5	S1	204	1	2	1			
TOTAL		484	484	968	484			

NUMBER	DATE	REVISION	APPROVED

CEDAR PARK

Binkley &Barfield, Inc.
consulting engineers
Texas Registration Number F-257
1710 Spoerlein Drive
Houston, Texas 77008-3189
(713) 869-3433 (713) 869-6702 FAX

SEAL
STATE OF TEXAS
KEVIN LEE PRAYTOR
121834
LICENSED PROFESSIONAL ENGINEER
10/5/16
Kevin Praytor

ANDERSON MILL ROAD
GASPAR BEND TO WHITESTONE BLVD
ILLUMINATION LAYOUT
STA 100+50 - STA 109+40

DESIGN BY: KWR
DRAWN BY: FJR
CHECKED BY: DRE
APPROVED BY: BDR
PROJECT NO: 156402
DATE: 10/5/2016

SCALE: 1"=80'
SHEET: 2 OF 13
PAGE: 182

U:\156402_Anderson Mill Rd Illumination\CAD\TL\1_AM_01-182.dgn 10/5/2016 4:19:09 PM FJR
Half_PDF_Letter.plt
Electric_pen.tbl

POLE DESIGNATION LEGEND:

MAST ARMS (S=SINGLE, D=DOUBLE, R=RELOCATION)
POLE NUMBER
POLE TYPE (EP=EXISTING POLE, NP=NEW POWER POLE– BY OTHERS, SP=NEW STREET LIGHT POLE– BY CONTRACTOR)

0' 20' 40' 80'
SCALE: 1"=80'

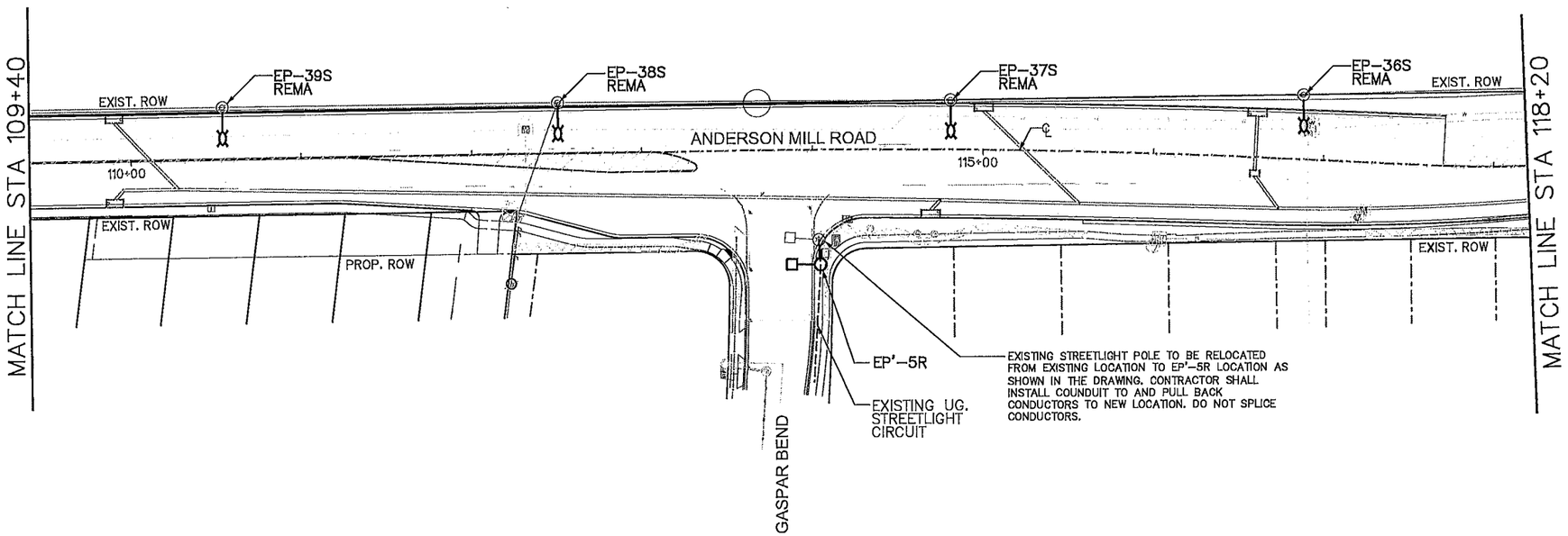

LEGEND

- PVC (SCH 40) OR RMC AND CONDUIT RUN NUMBER
- 2" PVC (SCH 80) BORED
- EXISTING POWER POLE WITH LED FIXTURE (RFM .16kW S)
- NEW POWER POLE WITH LED FIXTURE (RFM .16kW S)
- NEW STREET LIGHT POLE WITH LED FIXTURE (RFM .16kW S)
- NEW STREET LIGHT POLE WITH LED FIXTURE (RFM .16kW D)
- ELECTRICAL SERVICE
- PROPOSED GROUND BOX
- PULL BOX/GROUND BOX TY A 122311 (W/ Lid)
- (XX) CONDUIT RUN NO.
- NEW POLE LOCATION
- EXISTING POLE TO BE REMOVED
- EXISTING POLE REMAIN (REMA)

NOTES:

1. ALL STATIONING BASED ON CENTERLINE OF ANDERSON MILL RD UNLESS OTHERWISE NOTED.
2. CENTER OF THE POLE FOUNDATIONS SHALL BE A MINIMUM OF 2 FEET BEHIND BACK OF CURB OR FROM EDGE OF SIDEWALK.
3. DESIGN IS BASED ON THE USE OF 160 WATT LED FIXTURES AND 240 VOLT SERVICE TO BE PROVIDED BY PEC.
4. NEW MAST ARMS AND FIXTURES W/ POWER SUPPLY TO BE PROVIDED BY PEC WHEN EXISTING POWER POLES ARE USED TO HANG STREET LIGHTS.
5. NEW STREET POLES WITH MAST ARMS ARE TO BE SUPPLIED BY THE CONTRACTOR. THIS INCLUDES PULL BOXES, CONDUIT, AND CONDUCTOR. THE FIXTURES ARE SUPPLIED AND MAINTAINED BY PEC.
6. NEW POWER POLES AND OVER HEAD LINE DESIGN AND INSTALLATION WILL BE COMPLETED BY SEPARATE CONTRACT.
7. REPLACEMENT OR RELOCATION OF EXISTING POWER POLES AND OVERHEAD LINE IS NOT A PART OF THIS CONTRACT.

SUMMARY OF ILLUMINATION ASSEMBLIES

LED FIX (watts)						POLE			FIXTURE			
POLE NO.	PEC POLE ID	DESCRIPTION	STATION	OFFSET FROM CL	SIDE	POWER POLE EXIST	POWER POLE NEW	STREET LIGHT POLE	SINGLE=1 DUAL=2	ELECTRICAL SERVICE	ACTIVITY	kW
EP39S		LED (RFM 0.16 kW)	110+55	30.0	LT	1			1	O/H Line	FIX INS. & CON.	0.16
EP38S		LED (RFM 0.16 kW)	112+52	29.7	LT	1			1	O/H Line	FIX INS. & CON.	0.16
EP'-5R		LED (RFM 0.16 kW)	114+04	51.9	RT			1	1	EXISTING	R & FIX CON	0.16
EP37S		LED (RFM 0.16 kW)	114+81	27.5	LT	1			1	O/H Line	FIX INS. & CON.	0.16
EP36S		LED (RFM 0.16 kW)	116+87	37.6	LT	1			1	O/H Line	FIX INS. & CON.	0.16
		TOTAL				4	0	1	5			0.8

R= RELOCATION FIX CON.= FIXTURE CONNECTION

NUMBER	DATE	REVISION	APPROVED

CEDAR PARK

Binkley &Barfield, Inc.
consulting engineers
Texas Registration Number F-257
1210 Senmat Drive
Houston, Texas 77008-3189
(713) 869-3453 (713) 869-8702 FAX

SEAL
STATE OF TEXAS
KEVIN LEE PRAYTOR
121834
PROFESSIONAL ENGINEER
10/5/16

ANDERSON MILL ROAD
GASPAR BEND TO WHITESTONE BLVD
ILLUMINATION LAYOUT

STA 109+40 - STA 118+20

DESIGN BY: KWR
DRAWN BY: FJR
CHECKED BY: DRE
APPROVED BY: BDR
PROJECT NO: 156402
DATE: 10/5/2016

SCALE: 1"=80'
SHEET: 3 OF 13
PAGE: 183

U:\156402_Anderson Mill Rd_Illumination\CADD\TITLE_AM_02-183.dgn 10/5/2016 4:18:03 PM FJR
Hoff_PDF_Lighter.plt
Electric_pen.tbl

POLE DESIGNATION LEGEND:

- MAST ARMS (S=SINGLE, D=DOUBLE, R=RELOCATION)
- POLE NUMBER
- POLE TYPE (EP=EXISTING POLE, NP=NEW POWER POLE– BY OTHERS, SP=NEW STREET LIGHT POLE– BY CONTRACTOR)

0' 20' 40' 80'
SCALE: 1"=80'

LEGEND

- PVC (SCH 40) OR RMC AND CONDUIT RUN NUMBER
- 2" PVC (SCH 80) BORED
- EXISTING POWER POLE WITH LED FIXTURE (RFM .16kW S)
- NEW POWER POLE WITH LED FIXTURE (RFM .16kW S)
- NEW STREET LIGHT POLE WITH LED FIXTURE (RFM .16kW S)
- NEW STREET LIGHT POLE WITH LED FIXTURE (RFM .16kW D)
- ELECTRICAL SERVICE
- PROPOSED GROUND BOX
- PULL BOX/GROUND BOX TY A 122311 (W/ Lid)
- (XX) CONDUIT RUN NO.
- NEW POLE LOCATION
- EXISTING POLE TO BE REMOVED
- EXISTING POLE REMAIN (REMA)

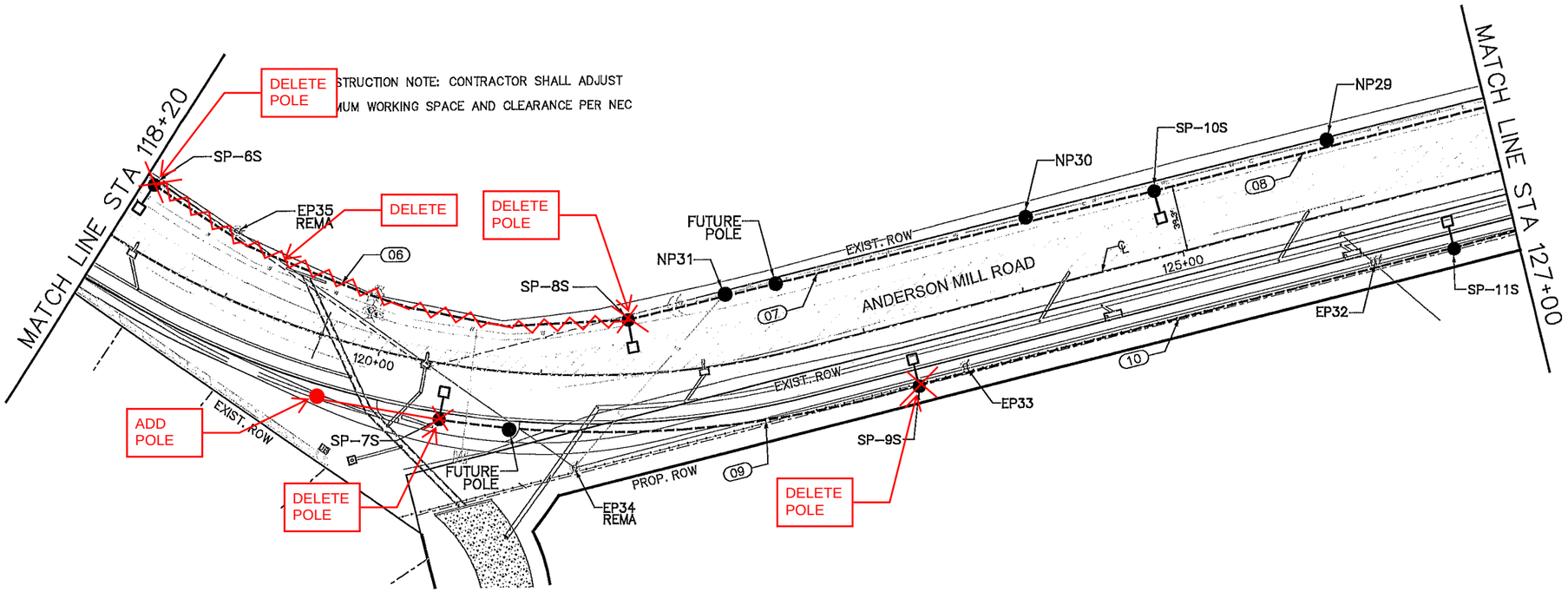

NOTES:

1. ALL STATIONING BASED ON CENTERLINE OF ANDERSON MILL RD UNLESS OTHERWISE NOTED.
2. CENTER OF THE POLE FOUNDATIONS SHALL BE A MINIMUM OF 2 FEET BEHIND BACK OF CURB OR FROM EDGE OF SIDEWALK.
3. DESIGN IS BASED ON THE USE OF 160 WATT LED FIXTURES AND 240 VOLT SERVICE TO BE PROVIDED BY PEC.
4. NEW MAST ARMS AND FIXTURES W/ POWER SUPPLY TO BE PROVIDED BY PEC WHEN EXISTING POWER POLES ARE USED TO HANG STREET LIGHTS.
5. NEW STREET POLES WITH MAST ARMS ARE TO BE SUPPLIED BY THE CONTRACTOR. THIS INCLUDES PULL BOXES, CONDUIT, AND CONDUCTOR. THE FIXTURES ARE SUPPLIED AND MAINTAINED BY PEC.
6. NEW POWER POLES AND OVER HEAD LINE DESIGN AND INSTALLATION WILL BE COMPLETED BY SEPARATE CONTRACT.
7. REPLACEMENT OR RELOCATION OF EXISTING POWER POLES AND OVERHEAD LINE IS NOT A PART OF THIS CONTRACT.

SUMMARY OF ILLUMINATION ASSEMBLIES

LED FIX (watts)						POLE			FIXTURE			
POLE NO.	PEC POLE ID	DESCRIPTION	STATION	OFFSET FROM CL	SIDE	POWER POLE EXIST	POWER POLE NEW	STREET LIGHT POLE	SINGLE=1 DUAL=2	ELECTRICAL SERVICE	ACTIVITY	kW
SP-6S		LED (RFM 0.16 kW)	118+54	28.5	LT			1	1	S2	FIX INS. & CON.	0.16
SP-7S		LED (RFM 0.16 kW)	120+46	33.5	RT			1	1	S2	FIX INS. & CON.	0.16
SP-8S		LED (RFM 0.16 kW)	121+64	31.6	LT			1	1	S2	FIX INS. & CON.	0.16
SP-9S		LED (RFM 0.16 kW)	123+25	39.5	RT			1	1	S2	FIX INS. & CON.	0.16
SP-10S		LED (RFM 0.16 kW)	124+92	39.0	LT			1	1	S2	FIX INS. & CON.	0.16
SP-11S		LED (RFM 0.16 kW)	126+61	38.5	RT			1	1	S2	FIX INS. & CON.	0.16
		TOTAL				0	0	6	6			0.96

R= RELOCATION FIX CON.= FIXTURE CONNECTION

CONDUIT AND CABLE SCHEDULE

RUN NO.	SYSTEM	LENGTH (FEET)	NUMBER OF EACH: 2" PVC CONDUIT	#8 INSUL COND.	#8 GREEN COND.	#6 INSUL COND.	#6 GREEN COND.	REMARKS
6	S2	314	1			2	1	POLE BASE TO LUMINARE BY #10 AWG CABLE
7	S2	337	1			2	1	
8	S2	320	1			2	1	
9	S2	312	1			2	1	
10	S2	320	1			2	1	
TOTAL		1,498	1,498			2,996	1,498	

NUMBER	DATE	REVISION	APPROVED

CEDAR PARK

Binkley &Barfield, Inc.
consulting engineers
Texas Registration Number F-267
1710 Spectel Drive
Houston, Texas 77008-3189
(713) 868-3433 (713) 869-6702 FAX

SEAL: STATE OF TEXAS — KEVIN LEE PRAYTOR 121834 — LICENSED PROFESSIONAL ENGINEER
Kevin Praytor 10/5/16

ANDERSON MILL ROAD
GASPAR BEND TO WHITESTONE BLVD
ILLUMINATION LAYOUT

STA 118+20 - STA 127+00

DESIGN BY: KWR
DRAWN BY: FJR
CHECKED BY: DRE
APPROVED BY: BDR
PROJECT NO: 156402
DATE: 10/5/2016

SCALE: 1"=80'

SHEET: 4 OF 13

PAGE: 184

U:\156402_Anderson Mill Rd Illumination\CADD\TI-11_AM_02-184.dgn 10/5/2016 4:19:05 PM FJR
Half_PDF_Lighter.plt
Electric_pen.tbl

POLE DESIGNATION LEGEND:

MAST ARMS (S=SINGLE, D=DOUBLE, R=RELOCATION)
POLE NUMBER
POLE TYPE (EP=EXISTING POLE, NP=NEW POWER POLE– BY OTHERS, SP=NEW STREET LIGHT POLE– BY CONTRACTOR)

0' 20' 40' 80'
SCALE: 1"=80'

LEGEND

- PVC (SCH 40) OR RMC AND CONDUIT RUN NUMBER
- 2" PVC (SCH 80) BORED
- EXISTING POWER POLE WITH LED FIXTURE (RFM .16kW S)
- NEW POWER POLE WITH LED FIXTURE (RFM .16kW S)
- NEW STREET LIGHT POLE WITH LED FIXTURE (RFM .16kW S)
- NEW STREET LIGHT POLE WITH LED FIXTURE (RFM .16kW D)
- ELECTRICAL SERVICE
- PROPOSED GROUND BOX
- PULL BOX/GROUND BOX TY A 122311 (W/ Lid)
- (XX) CONDUIT RUN NO.
- NEW POLE LOCATION
- EXISTING POLE TO BE REMOVED
- EXISTING POLE REMAIN (REMA)

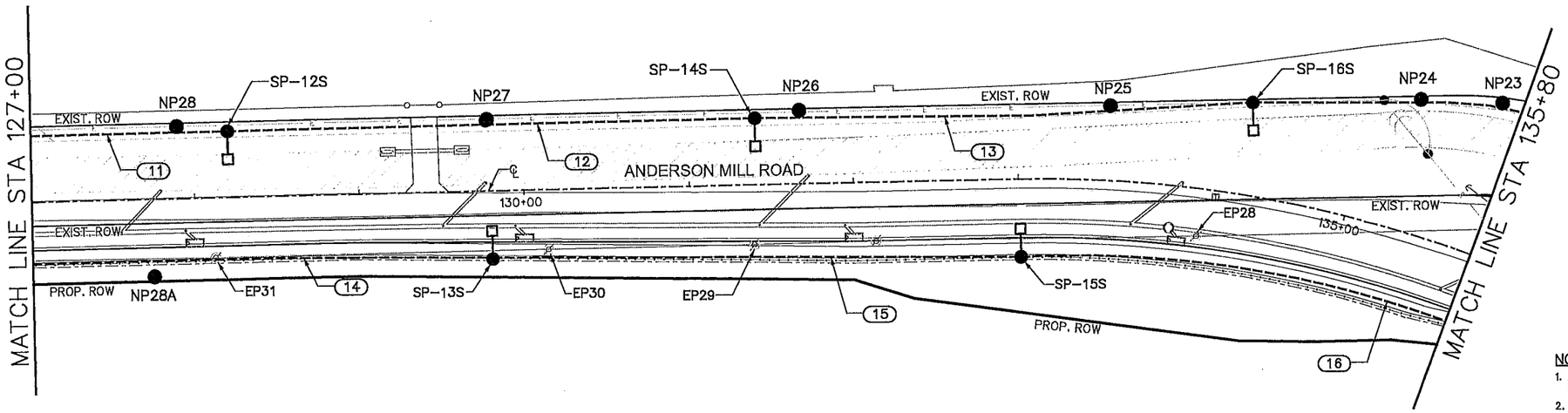

NOTES:

1. ALL STATIONING BASED ON CENTERLINE OF ANDERSON MILL RD UNLESS OTHERWISE NOTED.
2. CENTER OF THE POLE FOUNDATIONS SHALL BE A MINIMUM OF 2 FEET BEHIND BACK OF CURB OR FROM EDGE OF SIDEWALK.
3. DESIGN IS BASED ON THE USE OF 160 WATT LED FIXTURES AND 240 VOLT SERVICE TO BE PROVIDED BY PEC.
4. NEW MAST ARMS AND FIXTURES W/ POWER SUPPLY TO BE PROVIDED BY PEC WHEN EXISTING POWER POLES ARE USED TO HANG STREET LIGHTS.
5. NEW STREET POLES WITH MAST ARMS ARE TO BE SUPPLIED BY THE CONTRACTOR. THIS INCLUDES PULL BOXES, CONDUIT, AND CONDUCTOR. THE FIXTURES ARE SUPPLIED AND MAINTAINED BY PEC.
6. NEW POWER POLES AND OVER HEAD LINE DESIGN AND INSTALLATION WILL BE COMPLETED BY SEPARATE CONTRACT.
7. REPLACEMENT OR RELOCATION OF EXISTING POWER POLES AND OVERHEAD LINE IS NOT A PART OF THIS CONTRACT.

SUMMARY OF ILLUMINATION ASSEMBLIES

LED FIX (watts)						POLE			FIXTURE			
POLE NO.	PEC POLE ID	DESCRIPTION	STATION	OFFSET FROM CL	SIDE	POWER POLE EXIST	POWER POLE NEW	STREET LIGHT POLE	SINGLE=1 DUAL=2	ELECTRICAL SERVICE	ACTIVITY	kW
SP-12S		LED (RFM 0.16 kW)	128+21	39.8	LT			1	1	S2	FIX INS. & CON.	0.16
SP-13S		LED (RFM 0.16 kW)	129+81	41.0	RT			1	1	S2	FIX INS. & CON.	0.16
SP-14S		LED (RFM 0.16 kW)	131+41	40.0	LT			1	1	S2	FIX INS. & CON.	0.16
SP-15S		LED (RFM 0.16 kW)	133+1	46.8	RT			1	1	S2	FIX INS. & CON.	0.16
SP-16S		LED (RFM 0.16 kW)	134+37	55.8	LT			1	1	S2	FIX INS. & CON.	0.16
		TOTAL				0	0	5	5			0.8

R=RELOCATION FIX CON.=FIXTURE CONNECTION

CONDUIT AND CABLE SCHEDULE

RUN NO.	SYSTEM	LENGTH (FEET)	NUMBER OF EACH: 2" PVC CONDUIT	#8 INSUL COND.	#8 GREEN COND.	#6 INSUL COND.	#6 GREEN COND.	REMARKS
11	S2	320	1			2	1	POLE BASE TO LUMINARE BY#10 AWG CABLE
12	S2	320	1			2	1	
13	S2	320	1			2	1	
14	S2	320	1			2	1	
15	S2	320	1			2	1	
16	S2	300	1			2	1	
TOTAL		1,900	1,900			3,800	1,900	

NUMBER	DATE	REVISION	APPROVED

CEDAR PARK

Binkley &Barfield, Inc.
consulting engineers
Texas Registration Number F-257
1710 Spangle Drive
Houston, Texas 77008-3189
(713) 869-3433 (713) 869-6702 FAX

SEAL
STATE OF TEXAS
KEVIN LEE PRAYTOR
121834
PROFESSIONAL ENGINEER
10/5/16

ANDERSON MILL ROAD
GASPAR BEND TO WHITESTONE BLVD
ILLUMINATION LAYOUT

STA 127+00 - STA 135+80

DESIGN BY: KWR
DRAWN BY: FJR
CHECKED BY: DRE
APPROVED BY: BDR
PROJECT NO: 156402
DATE: 10/5/2016

SCALE: 1"=80'

SHEET: 5 OF 13

PAGE: 185

U:\156402_Anderson Mill Rd Illumination\CADD\TLY1_AM_03-185.dgn 10/5/2016 4:19:08 PM FJR
Half_PDF_Lighter.olt
Electric_pen.tbl

POLE DESIGNATION LEGEND:

MAST ARMS (S=SINGLE, D=DOUBLE, R=RELOCATION)
POLE NUMBER
POLE TYPE (EP=EXISTING POLE, NP=NEW POWER POLE– BY OTHERS, SP=NEW STREET LIGHT POLE– BY CONTRACTOR)

0' 20' 40' 80'
SCALE: 1"=80'

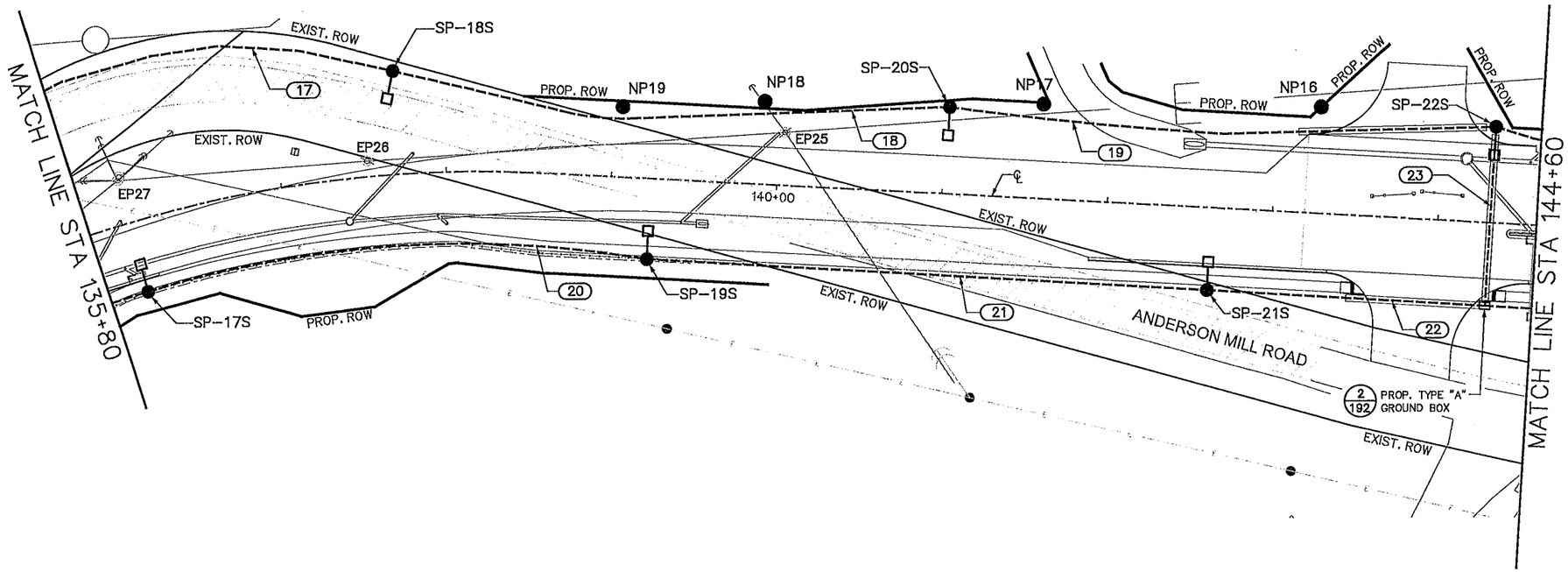

LEGEND

- PVC (SCH 40) OR RMC AND CONDUIT RUN NUMBER
- 2" PVC (SCH 80) BORED
- EXISTING POWER POLE WITH LED FIXTURE (RFM .16kW S)
- NEW POWER POLE WITH LED FIXTURE (RFM .16kW S)
- NEW STREET LIGHT POLE WITH LED FIXTURE (RFM .16kW S)
- NEW STREET LIGHT POLE WITH LED FIXTURE (RFM .16kW D)
- ELECTRICAL SERVICE
- PROPOSED GROUND BOX
- PULL BOX/GROUND BOX TY A 122311 (W/ Lid)
- (XX) CONDUIT RUN NO.
- NEW POLE LOCATION
- EXISTING POLE TO BE REMOVED
- EXISTING POLE REMAIN (REMA)

NOTES:

1. ALL STATIONING BASED ON CENTERLINE OF ANDERSON MILL RD UNLESS OTHERWISE NOTED.
2. CENTER OF THE POLE FOUNDATIONS SHALL BE A MINIMUM OF 2 FEET BEHIND BACK OF CURB OR FROM EDGE OF SIDEWALK.
3. DESIGN IS BASED ON THE USE OF 160 WATT LED FIXTURES AND 240 VOLT SERVICE TO BE PROVIDED BY PEC.
4. NEW MAST ARMS AND FIXTURES W/ POWER SUPPLY TO BE PROVIDED BY PEC WHEN EXISTING POWER POLES ARE USED TO HANG STREET LIGHTS.
5. NEW STREET POLES WITH MAST ARMS ARE TO BE SUPPLIED BY THE CONTRACTOR. THIS INCLUDES PULL BOXES, CONDUIT, AND CONDUCTOR. THE FIXTURES ARE SUPPLIED AND MAINTAINED BY PEC.
6. NEW POWER POLES AND OVER HEAD LINE DESIGN AND INSTALLATION WILL BE COMPLETED BY SEPARATE CONTRACT.
7. REPLACEMENT OR RELOCATION OF EXISTING POWER POLES AND OVERHEAD LINE IS NOT A PART OF THIS CONTRACT.

LED FIX (watts)						POLE			FIXTURE			
POLE NO.	PEC POLE ID	DESCRIPTION	STATION	OFFSET FROM CL	SIDE	POWER POLE EXIST	POWER POLE NEW	STREET LIGHT POLE	SINGLE=1 DUAL=2	ELECTRICAL SERVICE	ACTIVITY	kW
SP-17S		LED (RFM 0.16 kW)	136+04	42.7	RT			1	1	S2	FIX INS. & CON.	0.16
SP-18S		LED (RFM 0.16 kW)	137+77	61.9	LT			1	1	S2	FIX INS. & CON.	0.16
SP-19S		LED (RFM 0.16 kW)	139+24	48.3	RT			1	1	S2	FIX INS. & CON.	0.16
SP-20S		LED (RFM 0.16 kW)	141+02	61.8	LT			1	1	S2	FIX INS. & CON.	0.16
SP-21S		LED (RFM 0.16 kW)	142+63	49.8	RT			1	1	S2	FIX INS. & CON.	0.16
SP-22S		LED (RFM 0.16 kW)	144+32	65.0	LT			1	1	S2	FIX INS. & CON.	0.16
		TOTAL				0	0	6	6			0.96

R= RELOCATION FIX CON.= FIXTURE CONNECTION

RUN NO.	SYSTEM	LENGTH (FEET)	NUMBER OF EACH 2" PVC CONDUIT	#8 INSUL. COND.	#8 GREEN COND.	#6 INSUL. COND.	#6 GREEN COND.	REMARKS
17	S2	335	1			2	1	POLE BASE TO LUMINARE BY #10 AWG CABLE
18	S2	344	1			2	1	
19	S2	332	1			2	1	
20	S2	305	1			2	1	
21	S2	338	1			2	1	
22	S2	193	1	2	1	2	1	
23	S2	105	1			2	1	
TOTAL		1,952	1,952			3,904	1,952	

NUMBER	DATE	REVISION	APPROVED

CEDAR PARK

Binkley &Barfield, Inc.
consulting engineers
Texas Registration Number F-257
1710 Spoonit Drive
Houston, Texas 77008-3189
(713) 869-3433 (713) 869-8702 FAX

SEAL
STATE OF TEXAS
KEVIN LEE PRAYTOR
121834
PROFESSIONAL ENGINEER
10/5/16

ANDERSON MILL ROAD
GASPAR BEND TO WHITESTONE BLVD
ILLUMINATION LAYOUT

STA 135+80 - STA 144+60

DESIGN BY: KWR
DRAWN BY: FJR
CHECKED BY: DRE
APPROVED BY: BDR
PROJECT NO: 156402
DATE: 10/5/2016

SCALE: 1"=80'

SHEET: 6 OF 13

PAGE: 186

U:\156402_Anderson Mill Rd Illumination\CADD\TITY1_AM_03-186.dgn 10/5/2016 4:19:10 PM FJR
Half_PDF_Letter.plt
Electric_pen.tbl

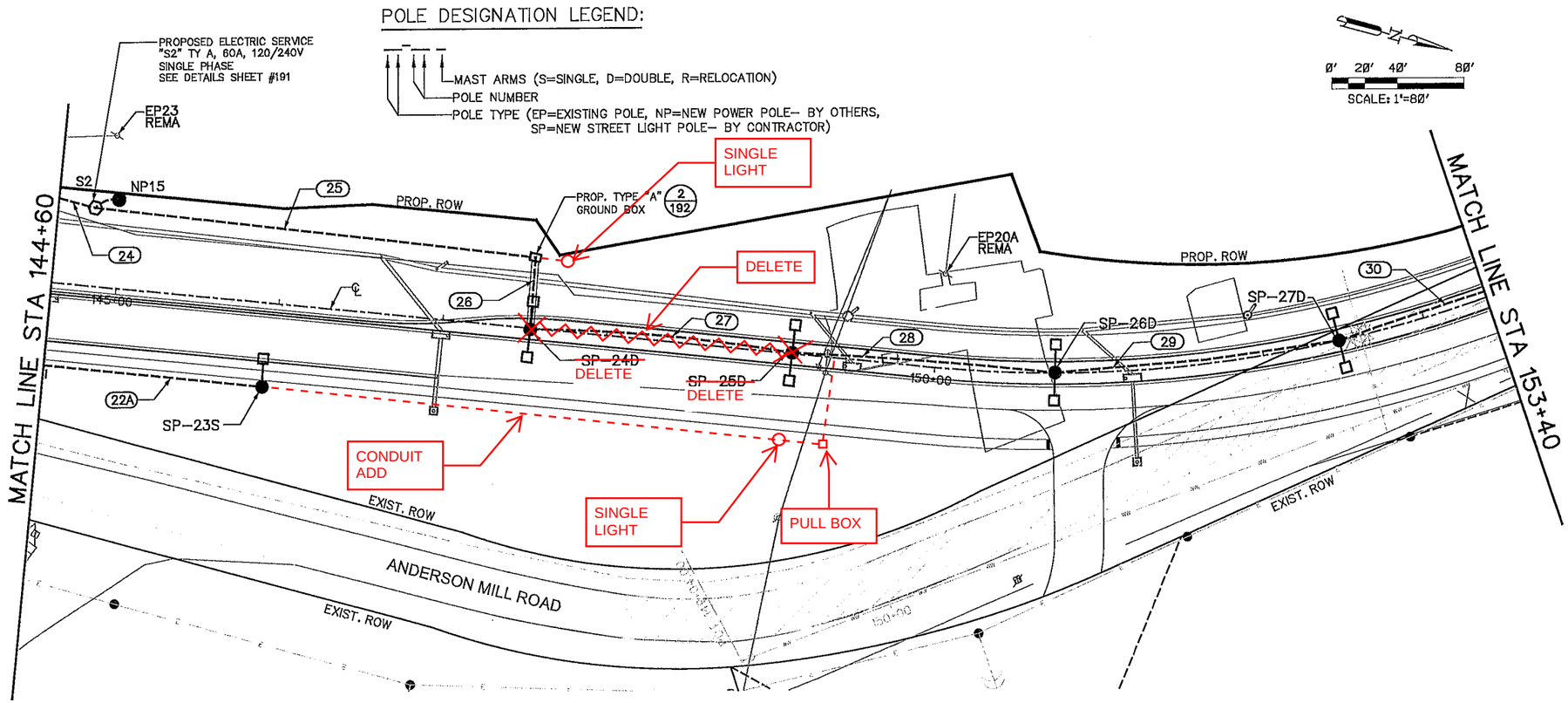

LEGEND

- PVC (SCH 40) OR RMC AND CONDUIT RUN NUMBER
- 2" PVC (SCH 80) BORED
- EXISTING POWER POLE WITH LED FIXTURE (RFM .16kW S)
- NEW POWER POLE WITH LED FIXTURE (RFM .16kW S)
- NEW STREET LIGHT POLE WITH LED FIXTURE (RFM .16kW S)
- NEW STREET LIGHT POLE WITH LED FIXTURE (RFM .16kW D)
- ELECTRICAL SERVICE
- PROPOSED GROUND BOX
- PULL BOX/GROUND BOX TY A 122311 (W/ Lid)
- (XX) CONDUIT RUN NO.
- NEW POLE LOCATION
- EXISTING POLE TO BE REMOVED
- EXISTING POLE REMAIN (REMA)

NOTES:

1. ALL STATIONING BASED ON CENTERLINE OF ANDERSON MILL RD UNLESS OTHERWISE NOTED.
2. CENTER OF THE POLE FOUNDATIONS SHALL BE A MINIMUM OF 2 FEET BEHIND BACK OF CURB OR FROM EDGE OF SIDEWALK.
3. DESIGN IS BASED ON THE USE OF 160 WATT LED FIXTURES AND 240 VOLT SERVICE TO BE PROVIDED BY PEC.
4. NEW MAST ARMS AND FIXTURES W/ POWER SUPPLY TO BE PROVIDED BY PEC WHEN EXISTING POWER POLES ARE USED TO HANG STREET LIGHTS.
5. NEW STREET POLES WITH MAST ARMS ARE TO BE SUPPLIED BY THE CONTRACTOR. THIS INCLUDES PULL BOXES, CONDUIT, AND CONDUCTOR. THE FIXTURES ARE SUPPLIED AND MAINTAINED BY PEC.
6. NEW POWER POLES AND OVER HEAD LINE DESIGN AND INSTALLATION WILL BE COMPLETED BY SEPARATE CONTRACT.
7. REPLACEMENT OR RELOCATION OF EXISTING POWER POLES AND OVERHEAD LINE IS NOT A PART OF THIS CONTRACT.

SUMMARY OF ILLUMINATION ASSEMBLIES

LED FIX (watts)						POLE			FIXTURE			
POLE NO.	PEC POLE ID	DESCRIPTION	STATION	OFFSET FROM CL	SIDE	POWER POLE EXIST	POWER POLE NEW	STREET LIGHT POLE	SINGLE=1 DUAL=2	ELECTRICAL SERVICE	ACTIVITY	kW
SP-23S		LED (RFM 0.16 kW)	145+95	50.4	RT			1	1	S2	FIX INS. & CON.	0.16
SP-24D		LED (RFM 0.16 kW)	147+53	0.0	CL			1	2	S2	FIX INS. & CON.	0.32
SP-25D		LED (RFM 0.16 kW)	149+13	0.0	CL			1	2	S2	FIX INS. & CON.	0.32
SP-26D		LED (RFM 0.16 kW)	150+73	0.0	CL			1	2	S2	FIX INS. & CON.	0.32
SP-27D		LED (RFM 0.16 kW)	152+47	0.0	CL			1	2	S2	FIX INS. & CON.	0.32
		TOTAL				0	0	5	9			1.44

R= RELOCATION FIX. CON.= FIXTURE CONNECTION

CONDUIT AND CABLE SCHEDULE

RUN NO.	SYSTEM	LENGTH (FEET)	NUMBER OF EACH: 2" PVC CONDUIT	#8 INSUL COND.	#8 GREEN COND.	#6 INSUL COND.	#6 GREEN COND.	REMARKS
22A	S2	130	1	2	1	4	2	POLE BASE TO LUMINARE BY#10 AWG CABLE
24	S2	61	1			2	1	
25	S2	256	1			2	1	
26	S2	41	1			2	1	
27	S2	160	1			2	1	
28	S2	160	1			2	1	
29	S2	160	1			2	1	
30	S2	96	1			2	1	
TOTAL		934	934			1,868	934	

NUMBER	DATE	REVISION	APPROVED

CEDAR PARK

Binkley & Barfield, Inc.
consulting engineers
Texas Registration Number F-257
1710 Seagirt Drive
Houston, Texas 77055-3189
(713) 688-3433 (713) 869-6702 FAX

SEAL
STATE OF TEXAS
KEVIN LEE PRAYTOR
121834
LICENSED PROFESSIONAL ENGINEER
10/5/16
Kevin Praytor

ANDERSON MILL ROAD
GASPAR BEND TO WHITESTONE BLVD
ILLUMINATION LAYOUT

STA 144+60 - STA 153+40

DESIGN BY: KWR
DRAWN BY: FJR
CHECKED BY: DRE
APPROVED BY: BDR
PROJECT NO: 156402
DATE: 10/5/2016

SCALE: 1"=80'

SHEET: 7 OF 13

PAGE: 187

UA156402_Anderson Mill Rd Illumination\FAD\TLYY_AM_04-187.dgn 10/5/2016 4:19:13 PM FJR
Half_PDF_Lighter.plt
Electric_pen.tbl

POLE DESIGNATION LEGEND:

MAST ARMS (S=SINGLE, D=DOUBLE, R=RELOCATION)
POLE NUMBER
POLE TYPE (EP=EXISTING POLE, NP=NEW POWER POLE– BY OTHERS, SP=NEW STREET LIGHT POLE– BY CONTRACTOR)

0' 20' 40' 80'
SCALE: 1"=80'

LEGEND

- PVC (SCH 40) OR RMC AND CONDUIT RUN NUMBER
- 2" PVC (SCH 80) BORED
- EXISTING POWER POLE WITH LED FIXTURE (RFM .16kW S)
- NEW POWER POLE WITH LED FIXTURE (RFM .16kW S)
- NEW STREET LIGHT POLE WITH LED FIXTURE (RFM .16kW S)
- NEW STREET LIGHT POLE WITH LED FIXTURE (RFM .16kW D)
- ELECTRICAL SERVICE
- PROPOSED GROUND BOX
- PULL BOX/GROUND BOX TY A 122311 (W/ Lid)
- (XX) CONDUIT RUN NO.
- NEW POLE LOCATION
- EXISTING POLE TO BE REMOVED
- EXISTING POLE REMAIN (REMA)

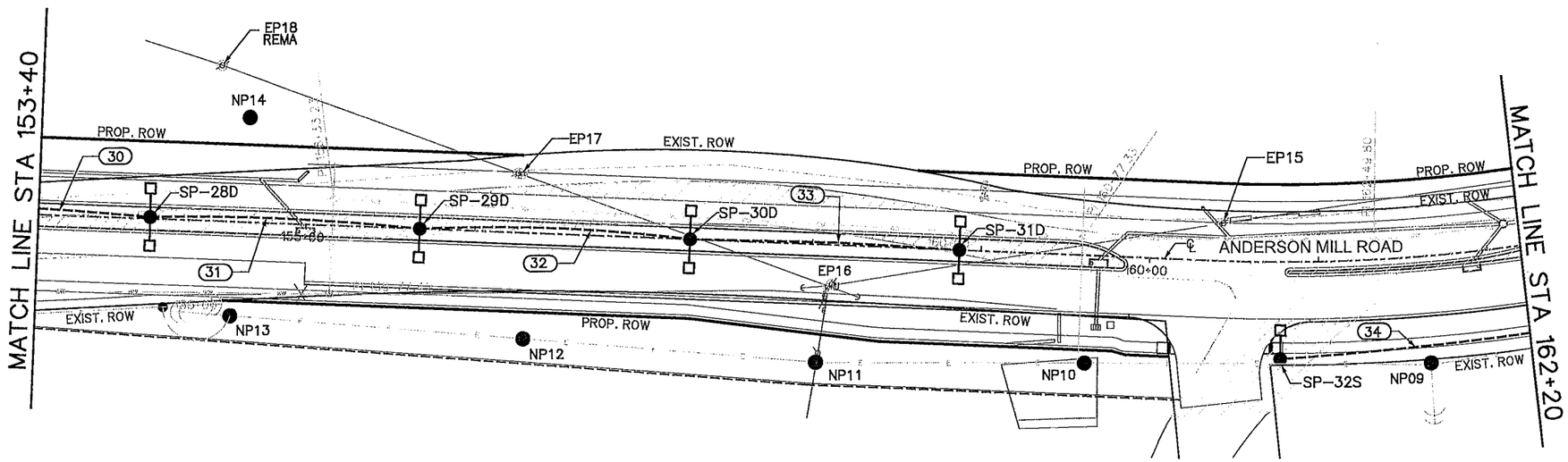

NOTES:

1. ALL STATIONING BASED ON CENTERLINE OF ANDERSON MILL RD UNLESS OTHERWISE NOTED.
2. CENTER OF THE POLE FOUNDATIONS SHALL BE A MINIMUM OF 2 FEET BEHIND BACK OF CURB OR FROM EDGE OF SIDEWALK.
3. DESIGN IS BASED ON THE USE OF 160 WATT LED FIXTURES AND 240 VOLT SERVICE TO BE PROVIDED BY PEC.
4. NEW MAST ARMS AND FIXTURES W/ POWER SUPPLY TO BE PROVIDED BY PEC WHEN EXISTING POWER POLES ARE USED TO HANG STREET LIGHTS.
5. NEW STREET POLES WITH MAST ARMS ARE TO BE SUPPLIED BY THE CONTRACTOR. THIS INCLUDES PULL BOXES, CONDUIT, AND CONDUCTOR. THE FIXTURES ARE SUPPLIED AND MAINTAINED BY PEC.
6. NEW POWER POLES AND OVER HEAD LINE DESIGN AND INSTALLATION WILL BE COMPLETED BY SEPARATE CONTRACT.
7. REPLACEMENT OR RELOCATION OF EXISTING POWER POLES AND OVERHEAD LINE IS NOT A PART OF THIS CONTRACT.

NUMBER	DATE	REVISION	APPROVED

CEDAR PARK

Binkley & Barfield, Inc.
consulting engineers
Texas Registration Number F-257
1710 Sawdust Road, Suite 1700B
The Woodlands, Texas 77380
(713) 889-3433 (713) 889-3169 (713) 889-8702 FAX

SEAL
STATE OF TEXAS
KEVIN LEE PRAYTOR
121834
LICENSED PROFESSIONAL ENGINEER
10/5/16

ANDERSON MILL ROAD
GASPAR BEND TO WHITESTONE BLVD
ILLUMINATION LAYOUT

STA 153+40 - STA 162+20

DESIGN BY:	KWR
DRAWN BY:	FJR
CHECKED BY:	DRE
APPROVED BY:	BDR
PROJECT NO:	156402
DATE:	10/5/2016

SCALE: 1"=80'
SHEET: 8 OF 13
PAGE: 188

JMINATION ASSEMBLIES

POLE NO.	PEC POLE ID	DESCRIPTION	STATION	OFFSET FROM CL	SIDE	POLE: POWER POLE EXIST	POLE: POWER POLE NEW	POLE: STREET LIGHT POLE	FIXTURE: SINGLE=1 DUAL=2	ELECTRICAL SERVICE	ACTIVITY	kW
) FIX (watts)												
SP-28D		LED (RFM 0.16 kW)	154+07	0.0	CL			1	2	S2	FIX INS. & CON.	0.32
SP-29D		LED (RFM 0.16 kW)	155+67	0.0	CL			1	2	S2	FIX INS. & CON.	0.32
SP-30D		LED (RFM 0.16 kW)	157+27	0.0	CL			1	2	S2	FIX INS. & CON.	0.32
SP-31D		LED (RFM 0.16 kW)	158+87	0.0	CL			1	2	S2	FIX INS. & CON.	0.32
SP-32S		LED (RFM 0.16 kW)	160+80	62.8	RT			1	1	S3	FIX INS. & CON.	0.16
		TOTAL				0	0	5	9			1.44

R= RELOCATION FIX CON.= FIXTURE CONNECTION

RUN NO.	SYSTEM	LENGTH (FEET)	NUMBER OF EACH: 2" PVC CONDUIT	#8 INSUL COND.	#8 GREEN COND.	#6 INSUL COND.	#6 GREEN COND.	REMARKS
30	S2	67	1			2	1	POLE BASE TO LUMINARE BY #10 AWG CABLE
31	S2	160	1			2	1	
32	S2	160	1			2	1	
33	S2	160	1			2	1	
34	S3	355	1			2	1	
TOTAL		902	902			1,804	902	

U:\156402_Anderson Mill Rd Illumination\CADD\TL-11 AM 04-188.dgn 10/5/2016 4:19:15 PM FJR
Half_PDF_Lighter.plt
Electric_gen.tbl

POLE DESIGNATION LEGEND:

- MAST ARMS (S=SINGLE, D=DOUBLE, R=RELOCATION)
- POLE NUMBER
- POLE TYPE (EP=EXISTING POLE, NP=NEW POWER POLE– BY OTHERS, SP=NEW STREET LIGHT POLE– BY CONTRACTOR)

0' 20' 40' 80'
SCALE: 1"=80'

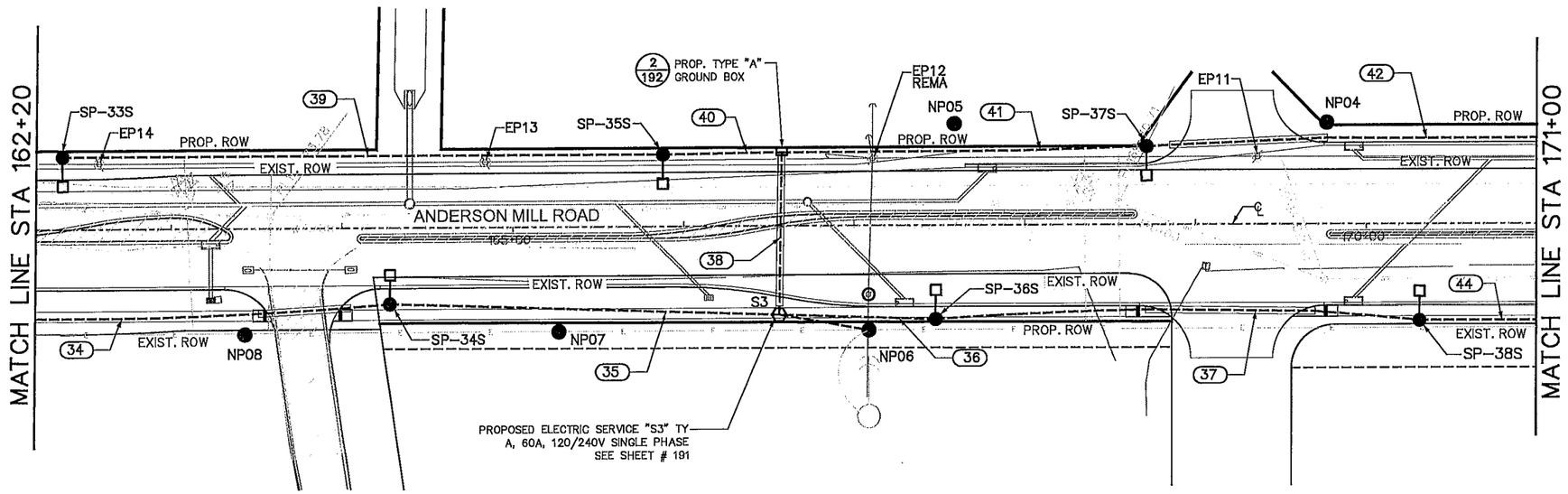

LEGEND

- PVC (SCH 40) OR RMC AND CONDUIT RUN NUMBER
- 2" PVC (SCH 80) BORED
- EXISTING POWER POLE WITH LED FIXTURE (RFM .16kW S)
- NEW POWER POLE WITH LED FIXTURE (RFM .16kW S)
- NEW STREET LIGHT POLE WITH LED FIXTURE (RFM .16kW S)
- NEW STREET LIGHT POLE WITH LED FIXTURE (RFM .16kW D)
- ELECTRICAL SERVICE
- PROPOSED GROUND BOX
- PULL BOX/GROUND BOX TY A 122311 (W/ Lid)
- (XX) CONDUIT RUN NO.
- NEW POLE LOCATION
- EXISTING POLE TO BE REMOVED
- EXISTING POLE REMAIN (REMA)

NOTES:

1. ALL STATIONING BASED ON CENTERLINE OF ANDERSON MILL RD UNLESS OTHERWISE NOTED.
2. CENTER OF THE POLE FOUNDATIONS SHALL BE A MINIMUM OF 2 FEET BEHIND BACK OF CURB OR FROM EDGE OF SIDEWALK.
3. DESIGN IS BASED ON THE USE OF 160 WATT LED FIXTURES AND 240 VOLT SERVICE TO BE PROVIDED BY PEC.
4. NEW MAST ARMS AND FIXTURES W/ POWER SUPPLY TO BE PROVIDED BY PEC WHEN EXISTING POWER POLES ARE USED TO HANG STREET LIGHTS.
5. NEW STREET POLES WITH MAST ARMS ARE TO BE SUPPLIED BY THE CONTRACTOR. THIS INCLUDES PULL BOXES, CONDUIT, AND CONDUCTOR. THE FIXTURES ARE SUPPLIED AND MAINTAINED BY PEC.
6. NEW POWER POLES AND OVER HEAD LINE DESIGN AND INSTALLATION WILL BE COMPLETED BY SEPARATE CONTRACT.
7. REPLACEMENT OR RELOCATION OF EXISTING POWER POLES AND OVERHEAD LINE IS NOT A PART OF THIS CONTRACT.

SUMMARY OF ILLUMINATION ASSEMBLIES

LED FIX (watts)						POLE			FIXTURE			
POLE NO.	PEC POLE ID	DESCRIPTION	STATION	OFFSET FROM CL	SIDE	POWER POLE EXIST	POWER POLE NEW	STREET LIGHT POLE	SINGLE=1 DUAL=2	ELECTRICAL SERVICE	ACTIVITY	kW
SP-33S		LED (RFM 0.16 kW)	162+35	42	LT			1	1	S3	FIX INS. & CON.	0.16
SP-34S		LED (RFM 0.16 kW)	164+28	44.3	RT			1	1	S3	FIX INS. & CON.	0.16
SP-35S		LED (RFM 0.16 kW)	165+88	41.8	LT			1	1	S3	FIX INS. & CON.	0.16
SP-36S		LED (RFM 0.16 kW)	167+48	54.4	RT			1	1	S3	FIX INS. & CON.	0.16
SP-37S		LED (RFM 0.16 kW)	168+71	45.4	LT			1	1	S3	FIX INS. & CON.	0.16
SP-38S		LED (RFM 0.16 kW)	170+31	55.9	RT			1	1	S3	FIX INS. & CON.	0.16
		TOTAL				0	0	6	6			0.96

R= RELOCATION FIX CON.= FIXTURE CONNECTION

CONDUIT AND CABLE SCHEDULE

RUN NO.	SYSTEM	LENGTH (FEET)	NUMBER OF EACH: 2" PVC CONDUIT	#8 INSUL COND.	#8 GREEN COND.	#6 INSUL COND.	#6 GREEN COND.	REMARKS
34	S3	106	1	2	1			POLE BASE TO LUMINARE BY #10 AWG CABLE
35	S3	229	1	2	1			
36	S3	92	1	2	1			
37	S3	218	1	2	1			
38	S3	102	1	2	1			
39	S3	345	1	2	1			
40	S3	83	1	2	1			
41	S3	190	1	2	1			
42	S3	123	1	2	1			
44	S3	70	1	2	1			
TOTAL		1,558	1,558	3,116	1,558			

NUMBER	DATE	REVISION	APPROVED

CEDAR PARK

Binkley &Barfield, Inc.
consulting engineers
Texas Registration Number F-257
1210 Serpillet Drive
Houston, Texas 77008-3180
(713) 868-2433 (713) 868-6702 FAX

SEAL: STATE OF TEXAS — KEVIN LEE PRAYTOR — 121834 — PROFESSIONAL ENGINEER
10/5/16

ANDERSON MILL ROAD
GASPAR BEND TO WHITESTONE BLVD
ILLUMINATION LAYOUT

STA 162+20 - STA 171+00

DESIGN BY:	KWR	SCALE:	1"=80'
DRAWN BY:	FJR		
CHECKED BY:	DRE		
APPROVED BY:	BDR	SHEET:	9 OF 13
PROJECT NO:	156402		
DATE:	10/5/2016	PAGE:	189

U:\156402_Anderson Mill Rd_Illumination\CAD\LT\L71_AM_05-189.dgn 10/5/2016 4:18:18 PM FJR
Half_PDF_Lighter.olt
Electric_pen.tbl

POLE DESIGNATION LEGEND:

MAST ARMS (S=SINGLE, D=DOUBLE, R=RELOCATION)
POLE NUMBER
POLE TYPE (EP=EXISTING POLE, NP=NEW POWER POLE– BY OTHERS, SP=NEW STREET LIGHT POLE– BY CONTRACTOR)

0' 20' 40' 80'
SCALE: 1"=80'

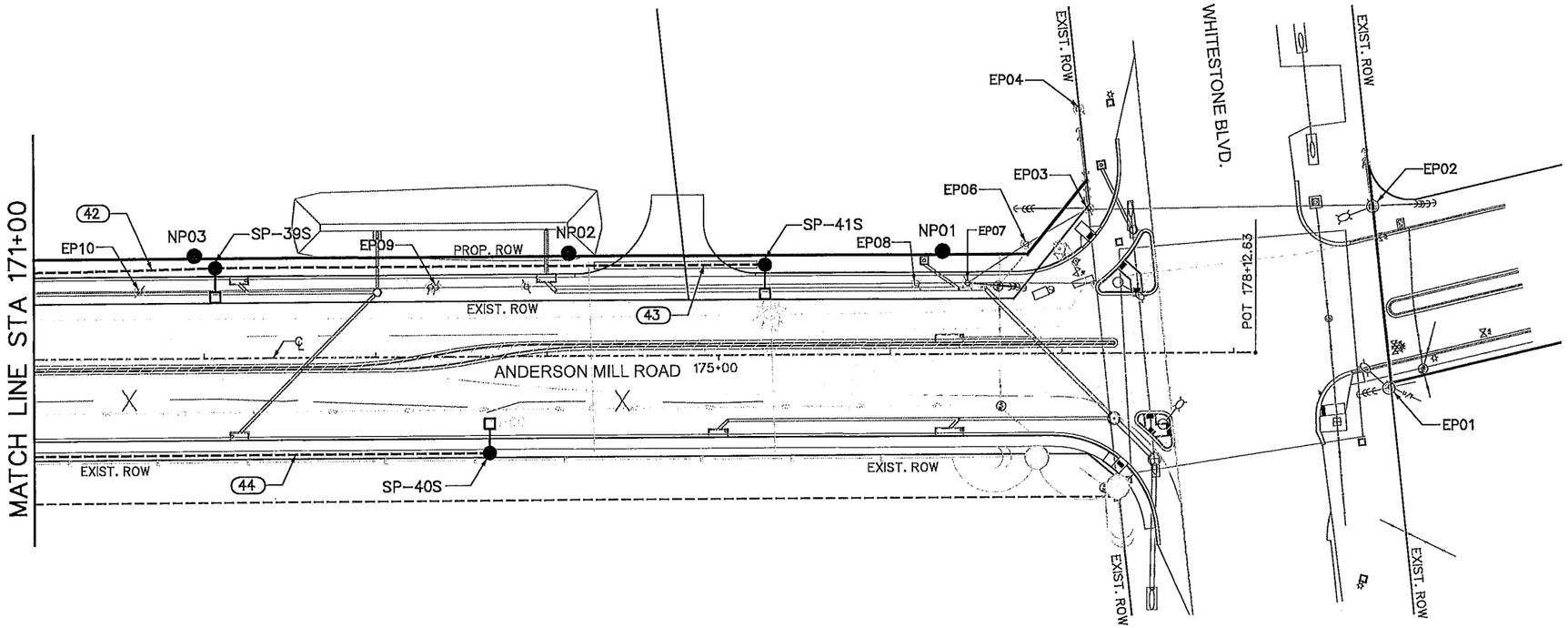

LEGEND

- PVC (SCH 40) OR RMC AND CONDUIT RUN NUMBER
- 2" PVC (SCH 80) BORED
- EXISTING POWER POLE WITH LED FIXTURE (RFM .16kW S)
- NEW POWER POLE WITH LED FIXTURE (RFM .16kW S)
- NEW STREET LIGHT POLE WITH LED FIXTURE (RFM .16kW S)
- NEW STREET LIGHT POLE WITH LED FIXTURE (RFM .16kW D)
- ELECTRICAL SERVICE
- PROPOSED GROUND BOX
- PULL BOX/GROUND BOX TY A 122311 (W/ LID)
- (XX) CONDUIT RUN NO.
- NEW POLE LOCATION
- EXISTING POLE TO BE REMOVED
- EXISTING POLE REMAIN (REMA)

TRAFFIC SIGNAL NOTE:

SEE TRAFFIC SIGNAL PLANS AND DETAILS FOR INTERSECTION SIGNAL AND LIGHTING IMPROVEMNETS.

NOTES:

1. ALL STATIONING BASED ON CENTERLINE OF ANDERSON MILL RD UNLESS OTHERWISE NOTED.
2. CENTER OF THE POLE FOUNDATIONS SHALL BE A MINIMUM OF 2 FEET BEHIND BACK OF CURB OR FROM EDGE OF SIDEWALK.
3. DESIGN IS BASED ON THE USE OF 160 WATT LED FIXTURES AND 240 VOLT SERVICE TO BE PROVIDED BY PEC.
4. NEW MAST ARMS AND FIXTURES W/ POWER SUPPLY TO BE PROVIDED BY PEC WHEN EXISTING POWER POLES ARE USED TO HANG STREET LIGHTS.
5. NEW STREET POLES WITH MAST ARMS ARE TO BE SUPPLIED BY THE CONTRACTOR. THIS INCLUDES PULL BOXES, CONDUIT, AND CONDUCTOR. THE FIXTURES ARE SUPPLIED AND MAINTAINED BY PEC.
6. NEW POWER POLES AND OVER HEAD LINE DESIGN AND INSTALLATION WILL BE COMPLETED BY SEPARATE CONTRACT.
7. REPLACEMENT OR RELOCATION OF EXISTING POWER POLES AND OVERHEAD LINE IS NOT A PART OF THIS CONTRACT.

SUMMARY OF ILLUMINATION ASSEMBLIES

LED FIX (watts)						POLE			FIXTURE			
POLE NO.	PEC POLE ID	DESCRIPTION	STATION	OFFSET FROM CL	SIDE	POWER POLE EXIST	POWER POLE NEW	STREET LIGHT POLE	SINGLE=1 DUAL=2	ELECTRICAL SERVICE	ACTIVITY	kW
SP-39S		LED (RFM 0.16 kW)	172+07	52.1	LT			1	1	S3	FIX INS. & CON.	0.16
SP-40S		LED (RFM 0.16 kW)	173+67	53.3	RT			1	1	S3	FIX INS. & CON.	0.16
SP-41S		LED (RFM 0.16 kW)	175+27	52.1	LT			1	1	S3	FIX INS. & CON.	0.16
		TOTAL				0	0	3	3			0.48

R= RELOCATION FIX. CON.= FIXTURE CONNECTION

CONDUIT AND CABLE SCHEDULE

RUN NO.	SYSTEM	LENGTH (FEET)	NUMBER OF EACH: 2" PVC CONDUIT	#8 INSUL COND.	#8 GREEN COND.	#6 INSUL COND.	#6 GREEN COND.	REMARKS
42	S3	332	1	2	1			POLE BASE TO LUMINARE BY #10 AWG CABLE
43	S3	320	1	2	1			
44	S3	335	1	2	1			
TOTAL		987	987	1,974	987			

NUMBER	DATE	REVISION	APPROVED

CEDAR PARK

Binkley &Barfield, Inc.
consulting engineers
Texas Registration Number F-257
1710 Seamist Drive
Houston, Texas 77008-3189
(713) 868-5433 (713) 868-6702 FAX

SEAL
STATE OF TEXAS
KEVIN LEE PRAYTOR
121834
LICENSED PROFESSIONAL ENGINEER
10/5/16

ANDERSON MILL ROAD
GASPAR BEND TO WHITESTONE BLVD
ILLUMINATION LAYOUT

STA 171+00- END PROJECT

DESIGN BY: KWR
DRAWN BY: FJR
CHECKED BY: DRE
APPROVED BY: BDR
PROJECT NO: 156402
DATE: 10/5/2016

SCALE: 1"=80'
SHEET: 10 OF 13
PAGE: 190

U:\156402 Anderson Mill Rd Illumination\PDX\TL11-AM_05-190.dgn 10/5/2016 4:18:21 PM FJR
Half_PDF_Lighter.plt
Electric_pen.tbl

ILLUMINATION QUANTITIES

BID ITEM				839S-MA15	839S-MAP2	16550S	SP504S-4PB-ST	SS1004-3 SP	TxDOT 618 6035	835S-LT2	844S-3
SHEET	STATION	POWER SOURCE	LUMINARE ON MASTARM POWER POLE CONNECT	6' MAST ARM	TYPE 2 MAST ARM 25' LIGHT POLE	SAMALL STREET LIGHT FOUNDATION - 25/30/35FT 30"x8'	INSTALL PULL BOXES TO GRADE - STREET LIGHT TY A	REMOVE & RELOCATION POLE & FOUNDATION	QUANTITIES FOR BORING FOR ROAD AND DRIVEWAY	INSTALLING TRAFFIC SIGNAL CONDUIT 2 INCH IN DIAMETER	CLASS 3 TRENCHING FOR TRAFFIC SIGNAL CONDUIT
		EA	EA	EA	EA	EA	EA	EA	LF	LF	LF
SHEET 2 OF 13	100+50 - 109+40	1	2	2	2	3		1	115	484	484
SHEET 3 OF 13	109+40 - 118+20		4		5	1	1	1			0
SHEET 4 OF 13	118+20 - 127+00			6	6	6				1,498	1,498
SHEET 5 OF 13	127+00 - 135+80			5	5	5				1,900	1900
SHEET 6 OF 13	135+80 - 144+60			6	6	6	1		300	2,091	2091
SHEET 7 OF 13	144+60 - 153+40	1		9	5	5	1		40	934	934
SHEET 8 OF 13	153+40 - 162+20			9	5	5				902	902
SHEET 9 OF 13	162+20 - 171+00	1		6	6	6	1		350	1,573	1573
SHEET 10 OF 13	171+00 - 178+13			3	3	3			95	987	987
TOTAL		**3**	**6**	**46**	**43**	**40**	**4**	**2**	**900**	**10,369**	**10,369**

SUMMARY OF ELECTRICAL SERVICES - ILLUMINATION

Electrical Service Label	Sheet No.	Electrical Service Description	Service Conduit Size	Service Conductors No./ Size	Safety Switch Amps	Main Ckt. Brk. Pole/Amps	Two-Pole Contactor Amps	Panel BD/ Loadcenter Amp Rating	Circuit No.	Branch Ckt. Brk. Pole/Amps	Branch Ckt. Amps	kVA Load
S1	2	ELECTRICIAL SERVICE TY A (120/240 V, 60A, 1P, 3W	1-1/4"	3/#2	N/A	2P/60	60	N/A	1	2P/20	2.67	1.0
									2	2P/20	0.78	
S2	7	ELECTRICIAL SERVICE TY A (120/240 V, 60A, 1P, 3W	1-1/4"	3/#2	N/A	2P/60	60	N/A	1	2P/20	10.67	6.8
									2	2P/20	6.00	
									3	2P/20	6.00	
S3	9	ELECTRICIAL SERVICE TY A (120/240 V, 60A, 1P, 3W	1- 1/4"	3/#2	N/A	2P/60	60	N/A	1	2P/20	1.33	3.0
									2	2P/20	1.33	
									3	2P/20	2.00	
									4	2P/20	2.00	

NOTES:

1. ALL STATIONING BASED ON CENTERLINE OF ANDERSON MILL RD UNLESS OTHERWISE NOTED.
2. CENTER OF THE POLE FOUNDATIONS SHALL BE A MINIMUM OF 2 FEET BEHIND BACK OF CURB OR FROM EDGE OF SIDEWALK.
3. DESIGN IS BASED ON THE USE OF 160 WATT LED FIXTURES AND 240 VOLT SERVICE TO BE PROVIDED BY PEC.
4. NEW MAST ARMS AND FIXTURES W/ POWER SUPPLY TO BE PROVIDED BY PEC WHEN EXISTING POWER POLES ARE USED TO HANG STREET LIGHTS.
5. NEW STREET POLES WITH MAST ARMS ARE TO BE SUPPLIED BY THE CONTRACTOR. THIS INCLUDES PULL BOXES, CONDUIT, AND CONDUCTOR. THE FIXTURES ARE SUPPLIED AND MAINTAINED BY PEC.
6. NEW POWER POLES AND OVER HEAD LINE DESIGN AND INSTALLATION WILL BE COMPLETED BY SEPARATE CONTRACT.
7. REPLACEMENT OR RELOCATION OF EXISTING POWER POLES AND OVERHEAD LINE IS NOT A PART OF THIS CONTRACT.

NUMBER	DATE	REVISION	APPROVED

CEDAR PARK

Binkley &Barfield, Inc.
consulting engineers
Texas Registration Number F-257
1710 Seawolf Drive
Houston, Texas 77008-3189
(713) 869-3433 (713) 869-6702 FAX

SEAL
STATE OF TEXAS
KEVIN LEE PRAYTOR
121834
FOR LICENSED PROFESSIONAL ENGINEER
Kevin Praytor 10/5/16

ANDERSON MILL ROAD
GASPAR BEND TO WHITESTONE BLVD

SUMMARY OF ELECTRICAL SERVICES

DESIGN BY:	KWR
DRAWN BY:	FJR
CHECKED BY:	DRE
APPROVED BY:	BDR
PROJECT NO:	156402
DATE:	10/5/2016

SCALE: 1"=80'

SHEET: 11 OF 13

PAGE: 191

U:\156402_Anderson Mill Rd Illumination\CADD\LT\1_AM_06-191.dgn 10/5/2016 4:18:23 PM FJR
Half_PDF_Lighter.pdf
Electric_pen.tbl

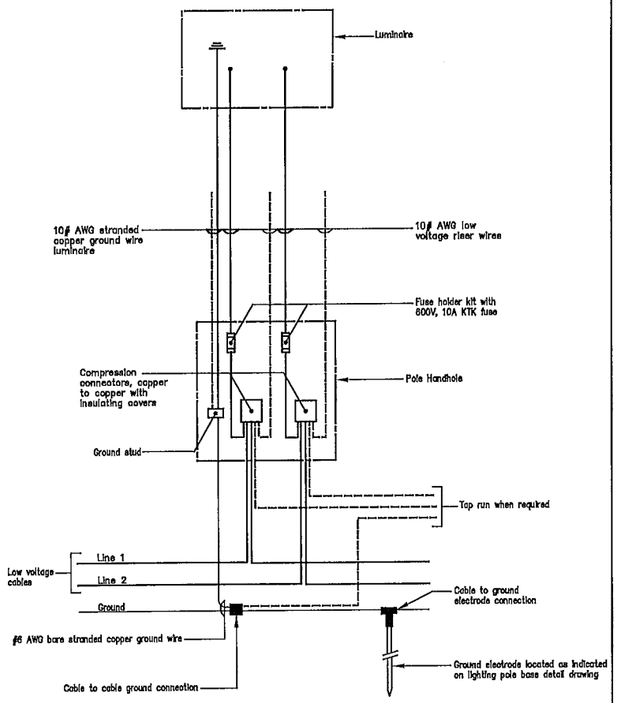

POLE WIRING DIAGRAM (1/192)
240V SYSTEM

Typical All Pads

1) Require 3" conduit (unless otherwise specified by PEC) with bell end fittings to extend 1½" to 2" above pad.
2) Pads must extend a minimum of 4" above final grade and 1½" below final grade. All pads must be placed on a slope less than or equal to 3:1. If greater than 3:1 contractor must bring slope to required grade.
3) All disturbed soil underneath pad must be replaced by concrete.
4) All ground rods shall be ¾" X 10' Copper clad with clamp and must extend 3" above top of pad.
5) Wood float finish leaving pad square and level with no dips or crown.

Typical For Single Phase Transformer, Combination, Sectionalizer, and Secondary Pads

6) Concrete to have minimum strength of 3000 PSI.
7) Steel reinforcing shall be 6" X 6" No. 10 wire mesh or ⅜" rebar on 12" center to stop 1" from the sides.

Typical For 3 Phase Transformer Pads

8) Concrete testing, 4000 PSI; 4%-6% entrained air, ¾" maximum size aggregate.
9) Steel reinforcement shall be ⅜" rebar on 12" center to stop 1" from sides.
10) Minimum concrete cover over reinforcing steel 2" unless noted.
11) Consult with PEC before pouring concrete.

Typical Trench Details

12) Schedule 40 electrical grade PVC conduit. Schedule 80 electrical grade conduit can be used in place of sand in secondary only trenches.
13) Initial backfill shall be manufactured or commercial sand. Minimum ⅜" pea gravel may be used for initial backfill in flood prone areas.
14) With PEC approval minimum cover requirements may be reduced by six inches with every two inches of 3000 PSI concrete poured directly onto conduit. *CONTACT PEC BEFORE POURING CONCRETE*
15) If any type of vault or pedestal for the underground electric is planned then all other utilities should be routed around these facilities.
16) For 2" and smaller waterlines special permission must be granted by PEC. Water lines larger than 2" will not be allowed in PEC trench.
17) For Gas lines 6" or larger, special permission must be granted by PEC and reference drawing 510-023-0911 shall be used

Legend
Typical in all Drawings

- (P) Primary Conduit
- (S) Secondary Conduit
- (AS) Alternate Secondary Conduit
- (CW) Communications or water
- (G) Gas Line

PEDERNALES ELECTRIC COOPERATIVE, INC.
URD DEVELOPER'S SPECIFICATIONS

Typical Notes Reference Page

drawn:	approved	date:	drawing number:
JBS	MJB	April 18, 2016	510-009-0911

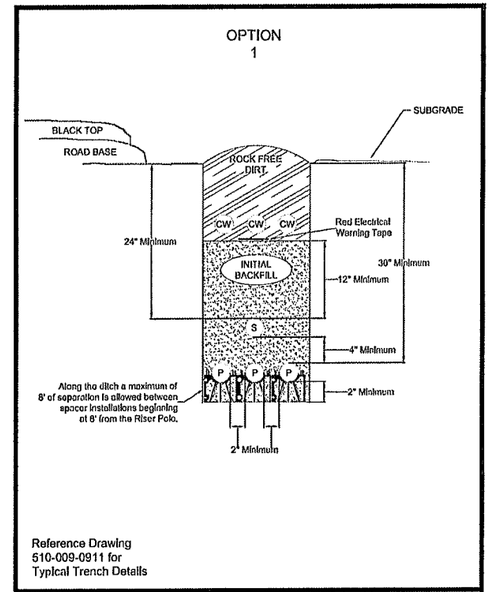

Reference Drawing
510-009-0911 for
Typical Trench Details

PEDERNALES ELECTRIC COOPERATIVE, INC.
URD DEVELOPER'S SPECIFICATIONS

3Ø Conduit Arrangement Joint with Other Utilities

drawn:	approved	date:	drawing number:
JBS	MJB	December 12, 2011	510-022-0911

NOTES:

1. ALL STATIONING BASED ON CENTERLINE OF ANDERSON MILL RD UNLESS OTHERWISE NOTED.
2. CENTER OF THE POLE FOUNDATIONS SHALL BE A MINIMUM OF 2 FEET BEHIND BACK OF CURB OR FROM EDGE OF SIDEWALK.
3. DESIGN IS BASED ON THE USE OF 160 WATT LED FIXTURES AND 240 VOLT SERVICE TO BE PROVIDED BY PEC.
4. NEW MAST ARMS AND FIXTURES W/ POWER SUPPLY TO BE PROVIDED BY PEC WHEN EXISTING POWER POLES ARE USED TO HANG STREET LIGHTS.
5. NEW STREET POLES WITH MAST ARMS ARE TO BE SUPPLIED BY THE CONTRACTOR. THIS INCLUDES PULL BOXES, CONDUIT, AND CONDUCTOR. THE FIXTURES ARE SUPPLIED AND MAINTAINED BY PEC.
6. NEW POWER POLES AND OVER HEAD LINE DESIGN AND INSTALLATION WILL BE COMPLETED BY SEPARATE CONTRACT.
7. REPLACEMENT OR RELOCATION OF EXISTING POWER POLES AND OVERHEAD LINE IS NOT A PART OF THIS CONTRACT.

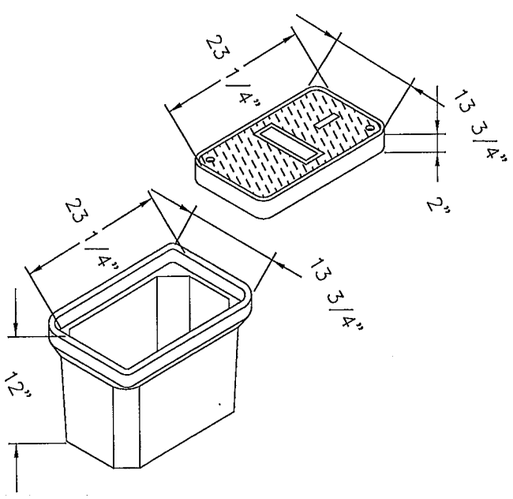

TYPE "A" GROUND BOX
24" X 13" OVERALL (2/192)

SCALE: NO SCALE
SYNERTECH S132412HH90 OR EQUAL

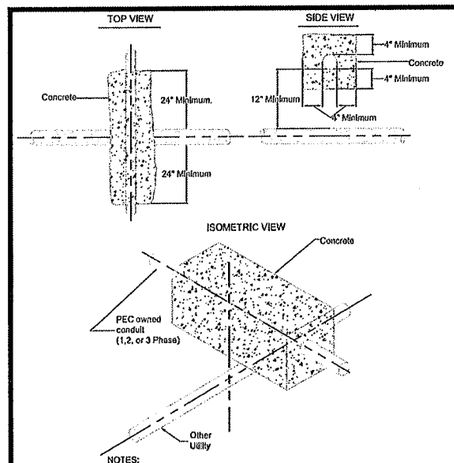

NOTES:

1) Refer to appropriate conduit arrangement drawing for correct embedment depth.
2) 3000 PSI concrete to be a minimum thickness of 4" around conduit.
3) This installation applies wherever the electrical conduit crosses above any other conduit.
4) If another utility crosses over a PEC conduit system the other utility must comply with the NESC rules 353B1 and 353B2. (NESC THE IEEE NATIONAL ELECTRIC SAFETY CODE)

PEDERNALES ELECTRIC COOPERATIVE, INC.
URD DEVELOPER'S SPECIFICATIONS

Conduit Crossing Detail For PEC above other Utilities

drawn:	approved	date:	drawing number:
JBS	MJB	December 12, 2011	510-024-0911

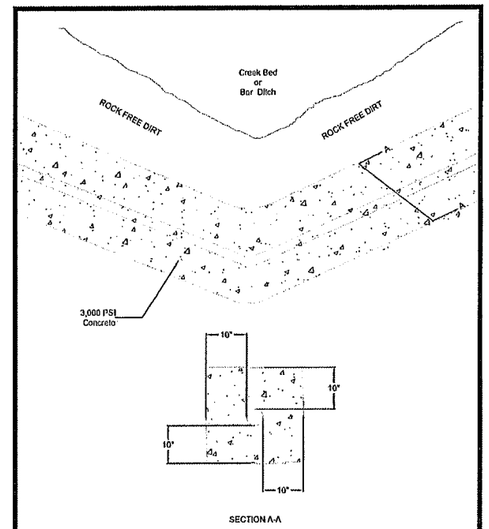

NOTE: Refer to appropriate conduit arrangement drawing for correct embedment depth.

PEDERNALES ELECTRIC COOPERATIVE, INC.
URD DEVELOPER'S SPECIFICATIONS

Conduit Installation In Flood Prone Areas

drawn:	approved	date:	drawing number:
JBS	MJB	December 12, 2011	510-029-0911

NUMBER	DATE	REVISION	APPROVED

CEDAR PARK

Binkley &Barfield, Inc.
consulting engineers
Texas Registration Number F-257
1710 Seamist Drive
Houston, Texas 77008-3189
(713) 869-3433 (713) 869-6702 FAX

SEAL
STATE OF TEXAS
KEVIN LEE PRAYTOR
1218834
LICENSED PROFESSIONAL ENGINEER
10/5/16

ANDERSON MILL ROAD
GASPAR BEND TO WHITESTONE BLVD

ELECTRICAL DETAILS

DESIGN BY:	KWR	SCALE:	1"=80'
DRAWN BY:	FJR		
CHECKED BY:	DRE		
APPROVED BY:	BDR	SHEET:	12 OF 13
PROJECT NO:	156402		
DATE:	10/5/2016	PAGE:	192

U:\156402_Anderson Mill Rd Illumination\CADD\LTL\1_AM_06-192.dgn 10/5/2016 4:18:29 PM FJR
Hoff_PDF_Lighter.olt
Electric_pen.tbl

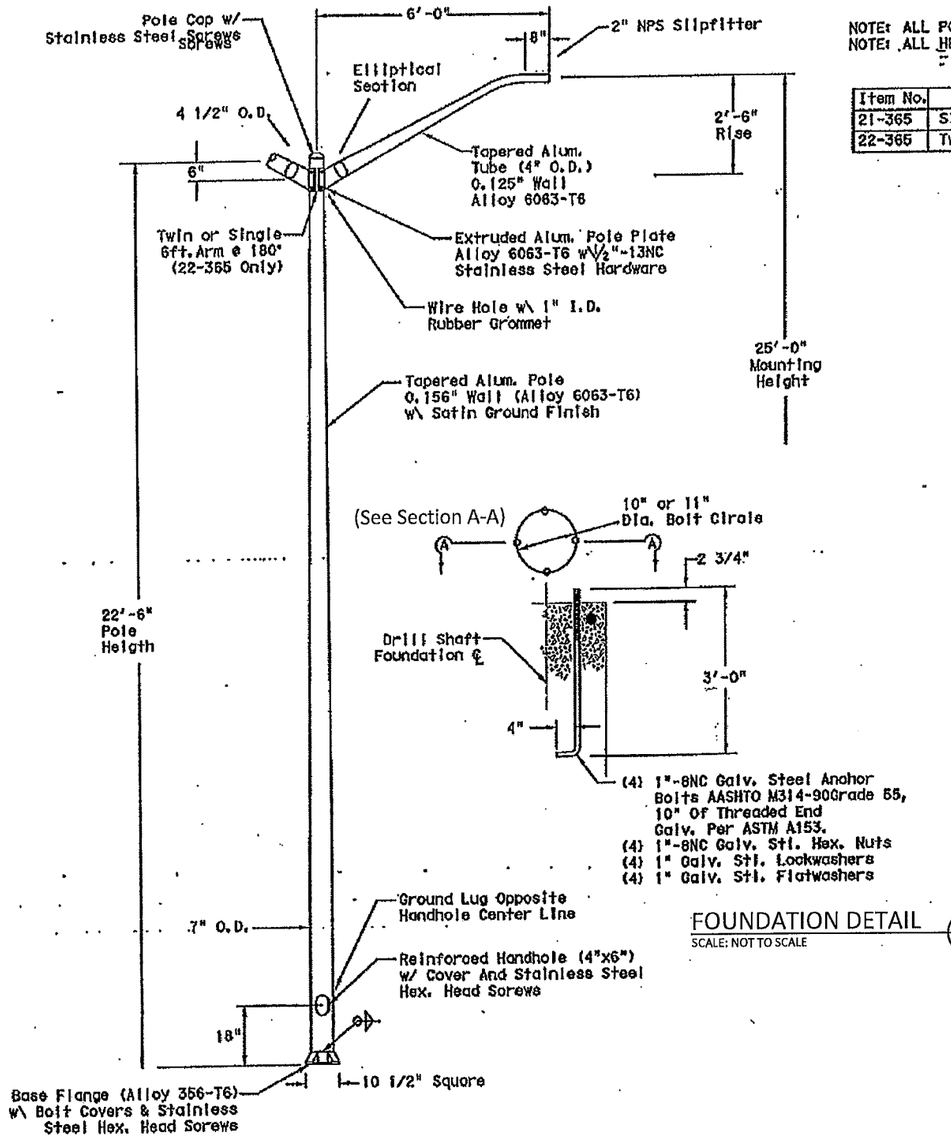

FOUNDATION DETAIL

ILLUMINATION POLE DETAILS (1/193)

SCALE: NO SCALE

FOUNDATION DETAIL (2/193)

SCALE: NOT TO SCALE

NOTE: ALL POLES TO BE BRUSHED ALUMINUM
NOTE: ALL HEADS TO BE "COBRA" STYLE

Item No.	Brackets
21-365	Single Bracket
22-365	Twin Brackets @180°

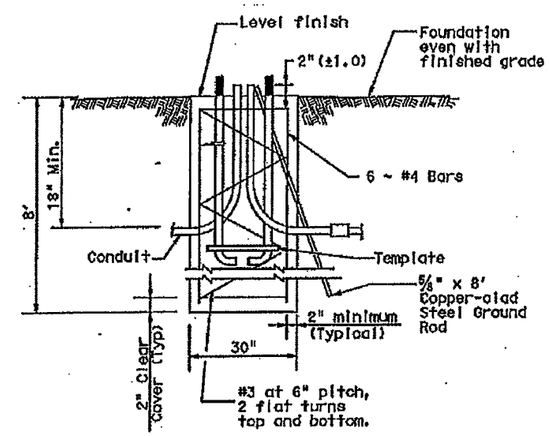

SECTION A-A

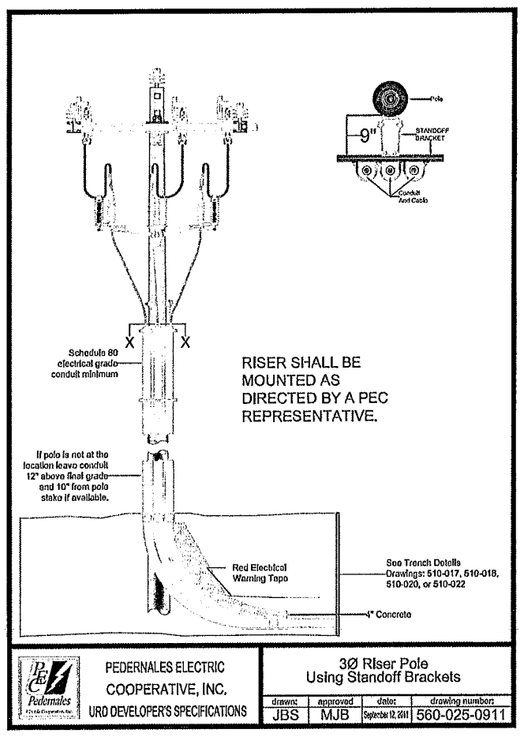

PEDERNALES ELECTRIC COOPERATIVE, INC.
URD DEVELOPER'S SPECIFICATIONS

3Ø Riser Pole Using Standoff Brackets

drawn:	approved	date:	drawing number:
JBS	MJB	September 12, 2011	560-025-0911

FOUNDATION NOTES:

1. USE LEVELING NUTS TO PLUMB SHOE BASE PLATES. DO NOT USE SHIMS OR LEVELING NUTS UNDER TRANSFORMER BASES. DO NOT GROUT BETWEEN BASEPLATE AND THE FOUNDATION.
2. INSTALL A MINIMUM OF 2 CONDUITS IN EACH FOUNDATION. SEE LIGHT LAYOUT SHEETS FOR LOCATING FOUNDATIONS WITH MORE THAN 2 CONDUITS. CAP USED CONDUITS IN FOUNDATIONS ON THE BOTH ENDS.
3. CONDUIT LOCATION IN FOUNDATIONS IS CRITICAL FOR BREAKWAY DEVICES, PLACE CONDUITS 2 IN APART ON CENTRAL LINE AS SHOWN.
4. BOND ANCHOR BOLT TO REBAR CASE WITH #6 BARE STRANDED COPPER CONDUCTOR. USE LISTED MECHANICAL CONNECTORS RATED FOR EMBEDMENT IN CONCRETE.

NOTES:

1. ALL STATIONING BASED ON CENTERLINE OF ANDERSON MILL RD UNLESS OTHERWISE NOTED.
2. CENTER OF THE POLE FOUNDATIONS SHALL BE A MINIMUM OF 2 FEET BEHIND BACK OF CURB OR FROM EDGE OF SIDEWALK.
3. DESIGN IS BASED ON THE USE OF 160 WATT LED FIXTURES AND 240 VOLT SERVICE TO BE PROVIDED BY PEC.
4. NEW MAST ARMS AND FIXTURES W/ POWER SUPPLY TO BE PROVIDED BY PEC WHEN EXISTING POWER POLES ARE USED TO HANG STREET LIGHTS.
5. NEW STREET POLES WITH MAST ARMS ARE TO BE SUPPLIED BY THE CONTRACTOR. THIS INCLUDES PULL BOXES, CONDUIT, AND CONDUCTOR. THE FIXTURES ARE SUPPLIED AND MAINTAINED BY PEC.
6. NEW POWER POLES AND OVER HEAD LINE DESIGN AND INSTALLATION WILL BE COMPLETED BY SEPARATE CONTRACT.
7. REPLACEMENT OR RELOCATION OF EXISTING POWER POLES AND OVERHEAD LINE IS NOT A PART OF THIS CONTRACT.

NUMBER	DATE	REVISION	APPROVED

CEDAR PARK

Binkley & Barfield, Inc.
consulting engineers
Texas Registration Number F-257
1710 Seagal Drive
Houston Texas 77030-3989
(713) 868-2533 (713) 868-5702 FAX

SEAL
STATE OF TEXAS
KEVIN LEE PRAYTOR
121834
LICENSED PROFESSIONAL ENGINEER
10/5/16

ANDERSON MILL ROAD
GASPAR BEND TO WHITESTONE BLVD

FOUNDATION DETAILS

DESIGN BY:	KWR	SCALE:	1"=80'
DRAWN BY:	FJR		
CHECKED BY:	DRE		
APPROVED BY:	BDR	SHEET:	13 OF 13
PROJECT NO:	156402		
DATE:	10/5/2016	PAGE:	193

U:\156402_Anderson Mill Rd Illumination\C&D\ILT\T_AM_06-193.dgn 10/5/2016 4:19:55 PM FJR
Half_PDF_Lighter.plt
Electric_pen.tbl

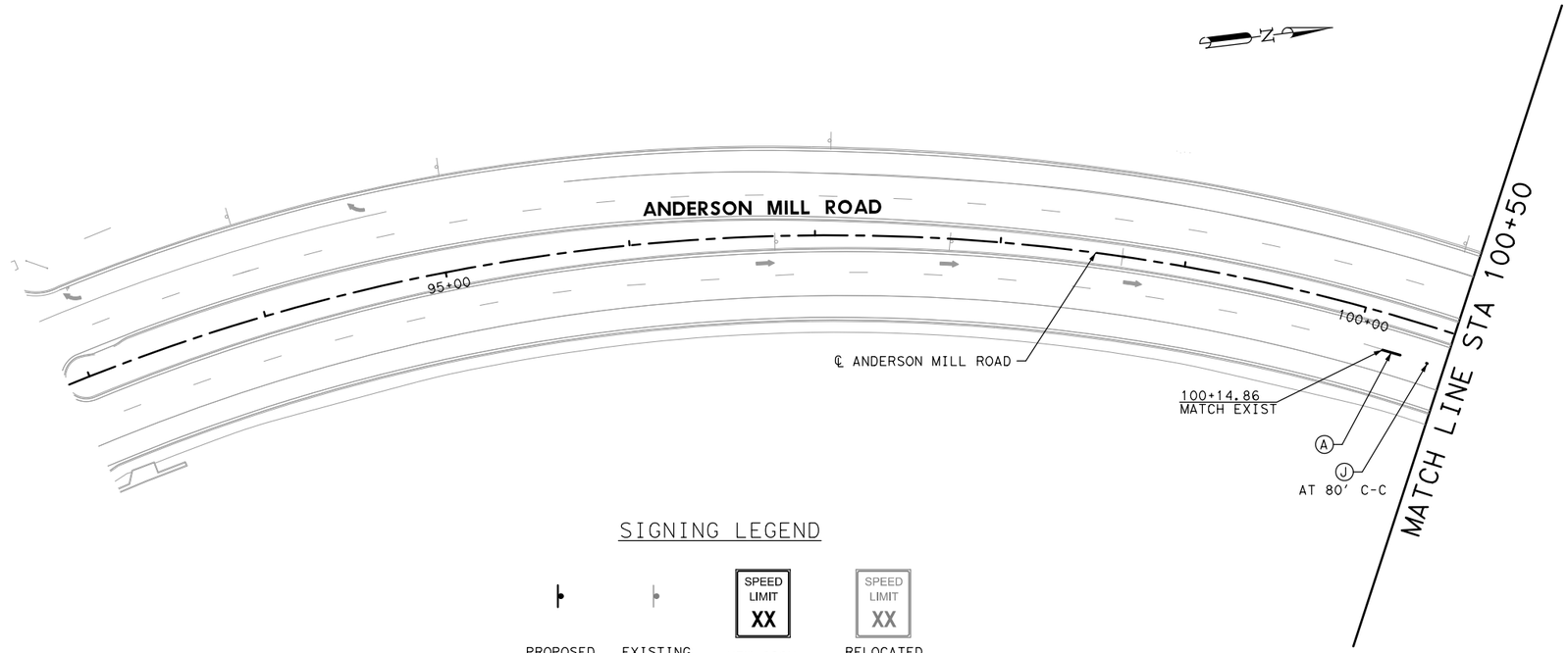

0' 20' 40' 80'

PAVEMENT MARKING LEGEND

- (A) PAV MRK TY I (W)(4")(BRK)
- (B) PAV MRK TY I (W)(4")(SLD)
- (C) PAV MRK TY I (W)(8")(SLD)
- (D) PAV MRK TY I (W)(12")(SLD)
- (E) PAV MRK TY I (W)(24")(SLD)
- (F) PAV MRK TY I (Y)(4")(SLD)
- (G) PAV MRK TY I (W)(4")(DASH)
- (H) PAV MRK TY I (W)(ARROW)
- (I) PAV MRK TY I (W)(WORD)
- (J) REFL PAV MRKR TY II-C-R
- (K) REFL PAV MRKR TY II-A-A
- (L) REFL PAV MRKR TY 1-C
- (M) PAV MRK TY 1 (W)(8")(DASH)
- (N) DEAD END BARRICADE
- DELINEATOR (SW)

NOTE:

ALL STRIPING SHALL BE THERMOPLASTIC 100 MIL AND FOLLOW COA 871S SPEC

SIGNING LEGEND

PROPOSED SIGN | EXISTING SIGN | NEW SIGN (SPEED LIMIT XX) | RELOCATED EXISTING SIGN (SPEED LIMIT XX)

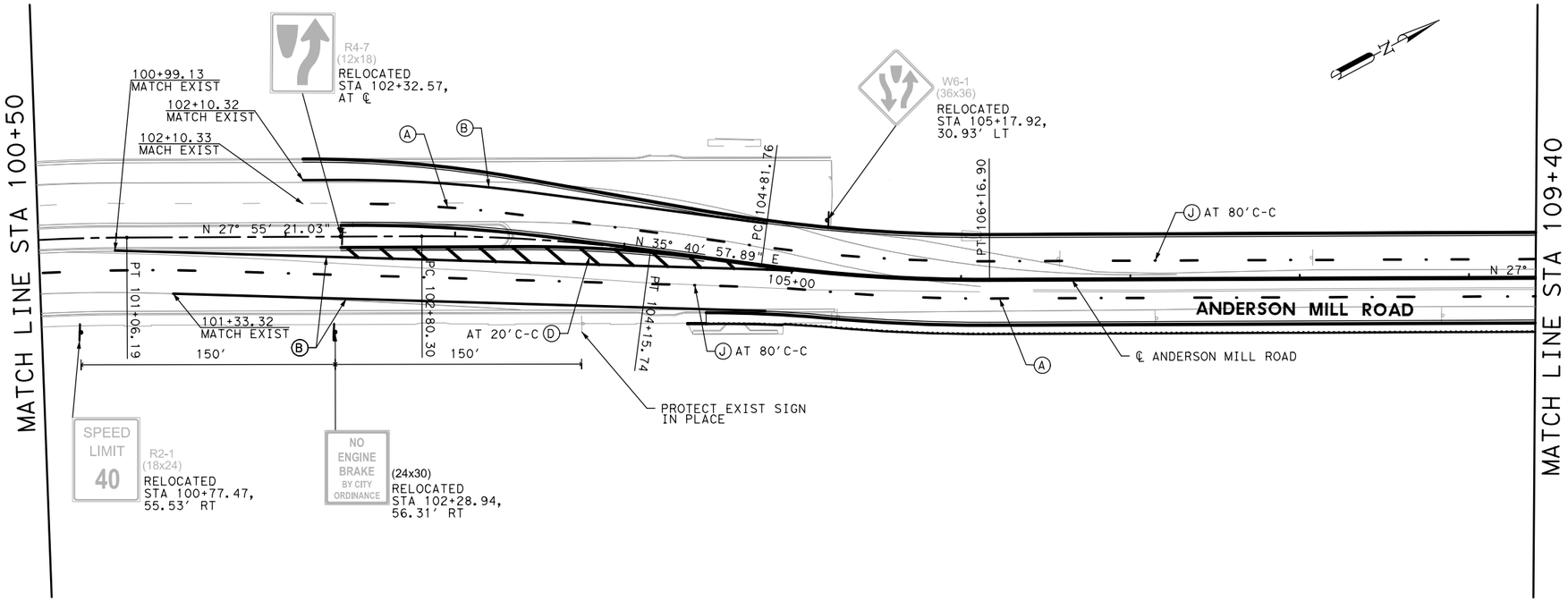

NUMBER	DATE	REVISION	APPROVED

STATE OF TEXAS
GREGORY C. CALKINS
111309
LICENSED
PROFESSIONAL ENGINEER
10/06/2016

CEDAR PARK

Binkley & Barfield, Inc
consulting engineers
Texas Registration Number F-257

ANDERSON MILL ROAD
GASPAR BEND TO WHITESTONE BLVD
SIGNING AND STRIPING PLANS
BEGIN PROJECT - STA 109+40

DESIGN BY:	GCC	SCALE:	1"=80'
DRAWN BY:	DSH		
CHECKED BY:	DRE	SHEET:	1 OF 5
APPROVED BY:	BDR		
PROJECT NO:	156402	PAGE:	194
DATE:	10/6/2016		

10/6/2016
8:49:58 AM
...\CADD\SHEETS\PMLY1*AM*01.dgn

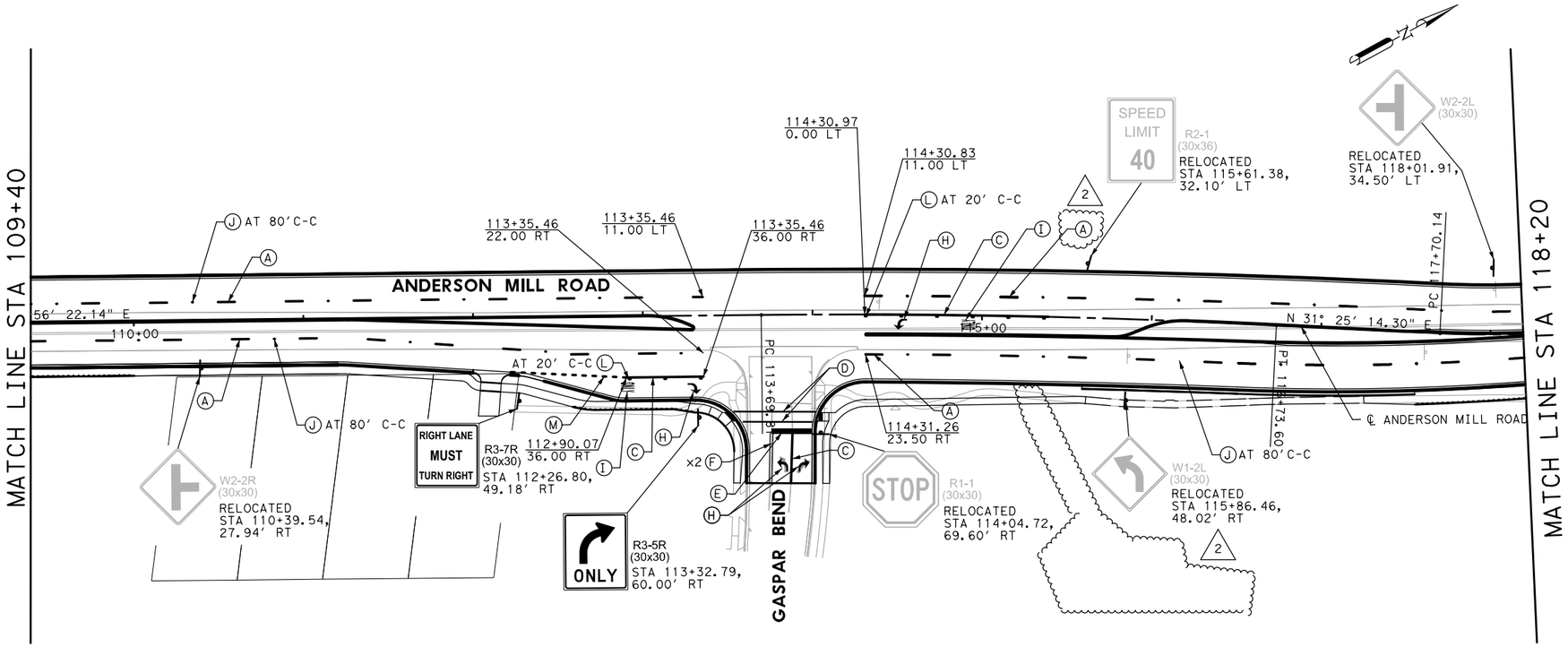

SIGNING LEGEND

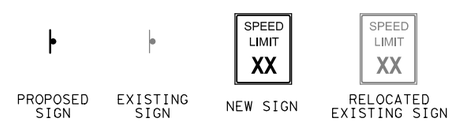

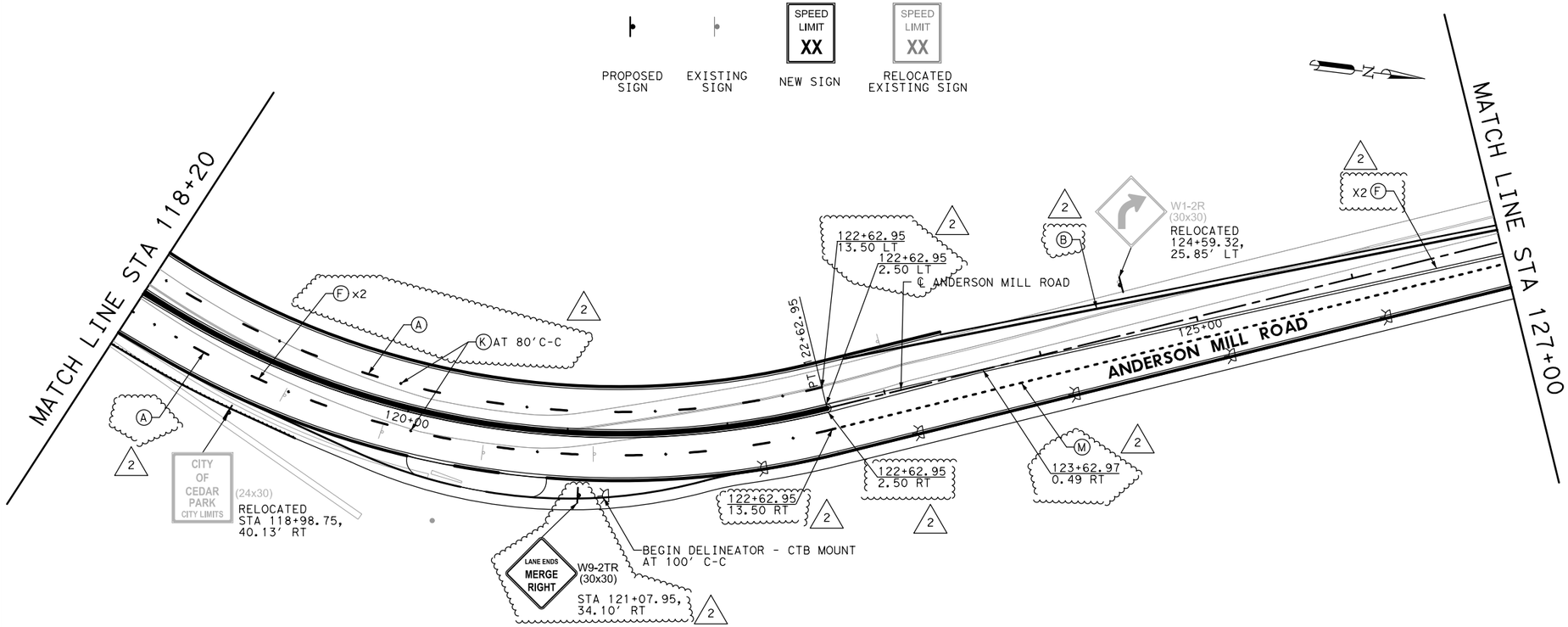

0' 20' 40' 80'

PAVEMENT MARKING LEGEND

- (A) PAV MRK TY I (W)(4")(BRK)
- (B) PAV MRK TY I (W)(4")(SLD)
- (C) PAV MRK TY I (W)(8")(SLD)
- (D) PAV MRK TY I (W)(12")(SLD)
- (E) PAV MRK TY I (W)(24")(SLD)
- (F) PAV MRK TY I (Y)(4")(SLD)
- (G) PAV MRK TY I (W)(4")(DASH)
- (H) PAV MRK TY I (W)(ARROW)
- (I) PAV MRK TY I (W)(WORD)
- (J) REFL PAV MRKR TY II-C-R
- (K) REFL PAV MRKR TY II-A-A
- (L) REFL PAV MRKR TY 1-C
- (M) PAV MRK TY 1 (W)(8")(DASH)
- (N) DEAD END BARRICADE
- DELINEATOR (SW)

NOTE:

ALL STRIPING SHALL BE THERMOPLASTIC 100 MIL AND FOLLOW COA 871S SPEC

NUMBER	DATE	REVISION	APPROVED
2	6/20/2017	ADDED MEDIAN AND SB LANES NORTH OF GASPAR RD	DRE

STATE OF TEXAS
DENNIS R. ECKER
119381
LICENSED
PROFESSIONAL ENGINEER
10/06/2016

CEDAR PARK

Binkley & Barfield, Inc
consulting engineers
Texas Registration Number F-257

ANDERSON MILL ROAD
GASPAR BEND TO WHITESTONE BLVD
SIGNING AND STRIPING PLANS
STA 109+40 - STA 127+00

DESIGN BY:	GCC	SCALE:	1"=80'
DRAWN BY:	DSH		
CHECKED BY:	DRE	SHEET:	2 OF 5
APPROVED BY:	BDR		
PROJECT NO:	156402	PAGE:	PMLY1_AM_02
DATE:	6/20/2017		

6/20/2017
12:06:16 PM
\\bzaus\data\bbi\trans\156402*Anderson*Mill*Road*North\CADD\SHEETS\PMLY1*AM*02A.dgn

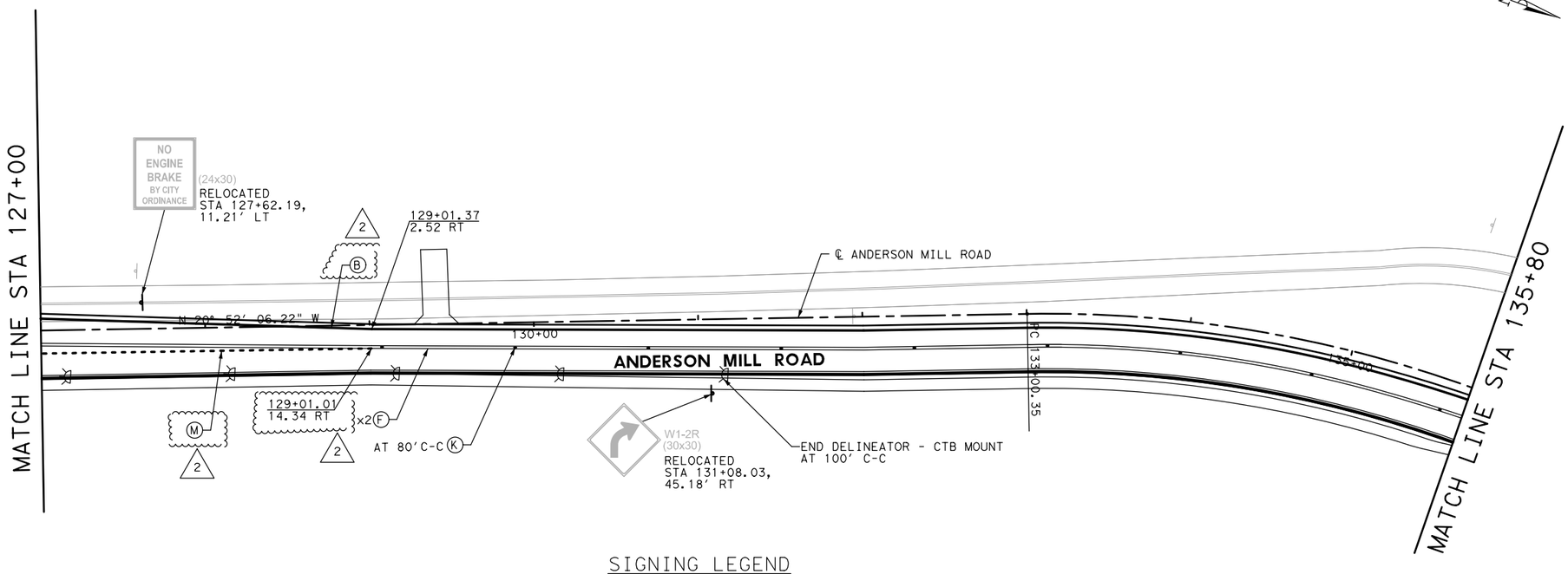

SIGNING LEGEND

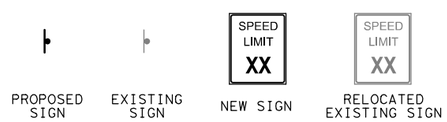

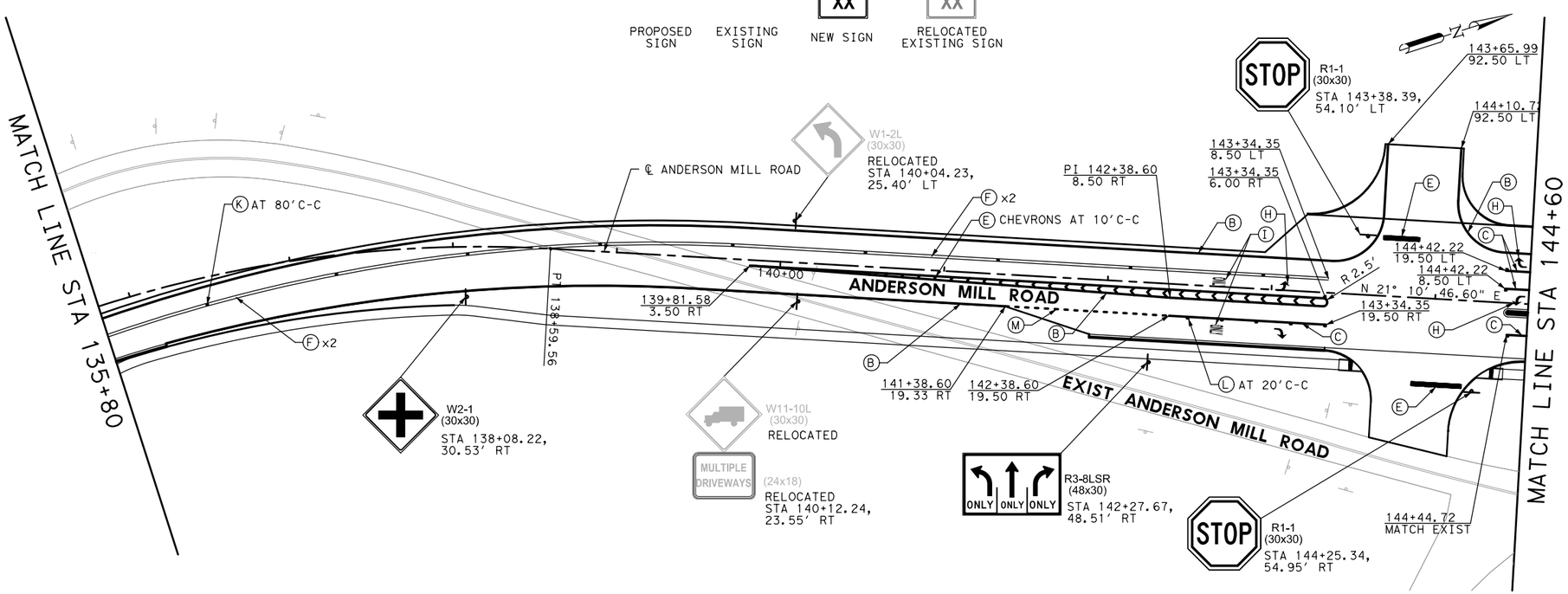

0' 20' 40' 80'

PAVEMENT MARKING LEGEND

- (A) PAV MRK TY I (W)(4")(BRK)
- (B) PAV MRK TY I (W)(4")(SLD)
- (C) PAV MRK TY I (W)(8")(SLD)
- (D) PAV MRK TY I (W)(12")(SLD)
- (E) PAV MRK TY I (W)(24")(SLD)
- (F) PAV MRK TY I (Y)(4")(SLD)
- (G) PAV MRK TY I (W)(4")(DASH)
- (H) PAV MRK TY I (W)(ARROW)
- (I) PAV MRK TY I (W)(WORD)
- (J) REFL PAV MRKR TY II-C-R
- (K) REFL PAV MRKR TY II-A-A
- (L) REFL PAV MRKR TY 1-C
- (M) PAV MRK TY 1 (W)(8")(DASH)
- (N) DEAD END BARRICADE
- DELINEATOR (SW)

NOTE:

ALL STRIPING SHALL BE THERMOPLASTIC 100 MIL AND FOLLOW COA 871S SPEC

NUMBER	DATE	REVISION	APPROVED
2	6/20/2017	ADDED MEDIAN AND SB LANES NORTH OF GASPAR RD	DRE

STATE OF TEXAS
DENNIS R. ECKER
119381
LICENSED
PROFESSIONAL ENGINEER
10/06/2016

CEDAR PARK

Binkley & Barfield, Inc
consulting engineers
Texas Registration Number F-257

ANDERSON MILL ROAD
GASPAR BEND TO WHITESTONE BLVD
SIGNING AND STRIPING PLANS
STA 127+00 - STA 144+60

DESIGN BY:	GCC	SCALE:	1"=80'
DRAWN BY:	DSH		
CHECKED BY:	DRE	SHEET:	3 OF 5
APPROVED BY:	BDR		
PROJECT NO:	156402	PAGE:	PMLY1_AM_03
DATE:	6/20/2017		

6/20/2017
12:06:29 PM
\\bzaus\Data\bb\trans\156402*Anderson*Mill*Road*North\CADD\SHEETS\PMLY1*AM*03A.dgn

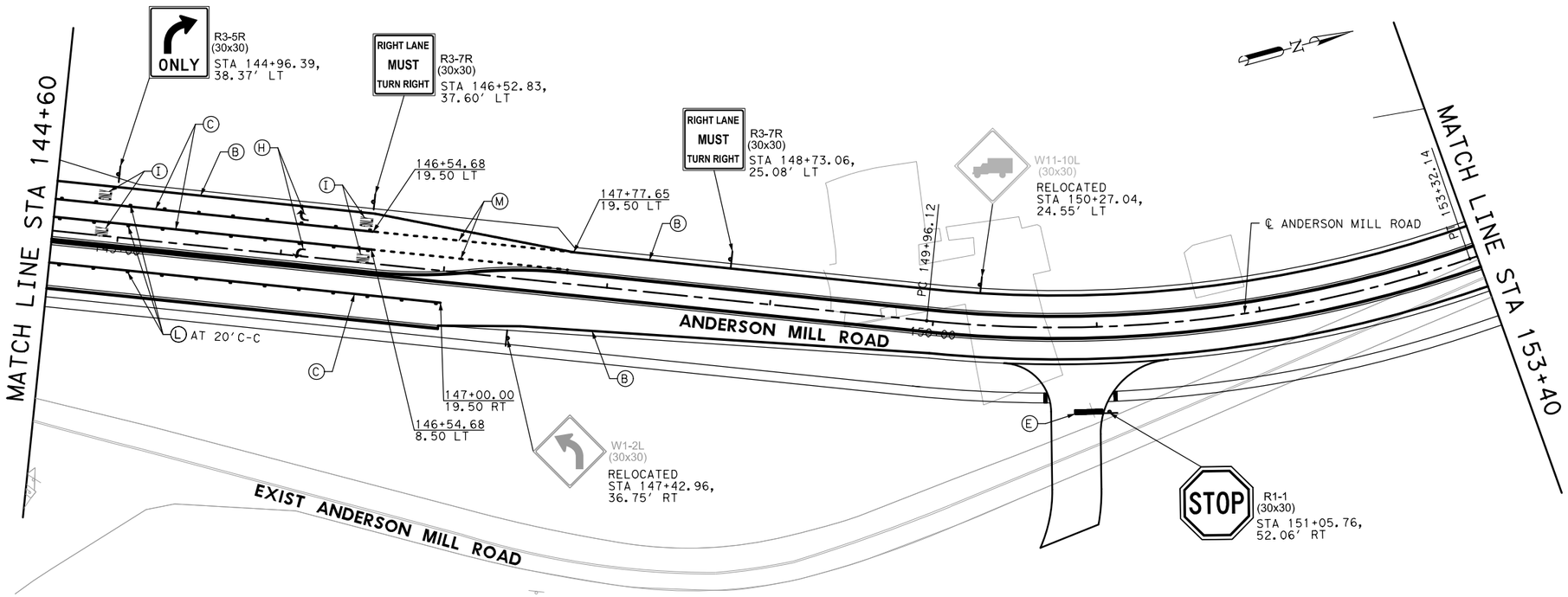

0' 20' 40' 80'

PAVEMENT MARKING LEGEND

- (A) PAV MRK TY I (W)(4")(BRK)
- (B) PAV MRK TY I (W)(4")(SLD)
- (C) PAV MRK TY I (W)(8")(SLD)
- (D) PAV MRK TY I (W)(12")(SLD)
- (E) PAV MRK TY I (W)(24")(SLD)
- (F) PAV MRK TY I (Y)(4")(SLD)
- (G) PAV MRK TY I (W)(4")(DASH)
- (H) PAV MRK TY I (W)(ARROW)
- (I) PAV MRK TY I (W)(WORD)
- (J) REFL PAV MRKR TY II-C-R
- (K) REFL PAV MRKR TY II-A-A
- (L) REFL PAV MRKR TY 1-C
- (M) PAV MRK TY 1 (W)(8")(DASH)
- (N) DEAD END BARRICADE
- DELINEATOR (SW)

NOTE:

ALL STRIPING SHALL BE THERMOPLASTIC 100 MIL AND FOLLOW COA 871S SPEC

SIGNING LEGEND

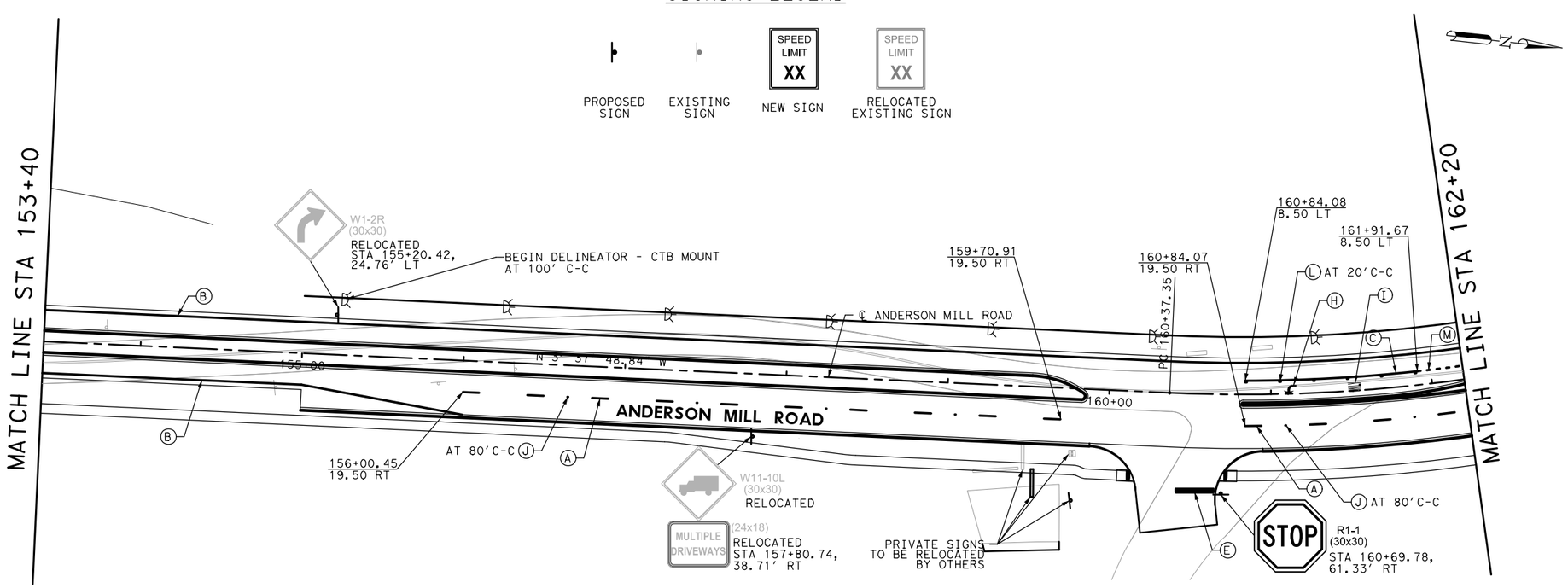

NUMBER	DATE	REVISION	APPROVED

STATE OF TEXAS
GREGORY C. CALKINS
111309
LICENSED
PROFESSIONAL ENGINEER
10/06/2016

CEDAR PARK

Binkley & Barfield, Inc
consulting engineers
Texas Registration Number F-257

ANDERSON MILL ROAD
GASPAR BEND TO WHITESTONE BLVD
SIGNING AND STRIPING PLANS
STA 144+60 - STA 162+20

DESIGN BY:	GCC	SCALE: 1"=80'	
DRAWN BY:	DSH		
CHECKED BY:	DRE		
APPROVED BY:	BDR	SHEET: 4 OF 5	
PROJECT NO:	156402		
DATE:	10/6/2016	PAGE: 197	

10/6/2016
8:50:09 AM
...\CADD\SHEETS\PMLY1*AM*04.dgn

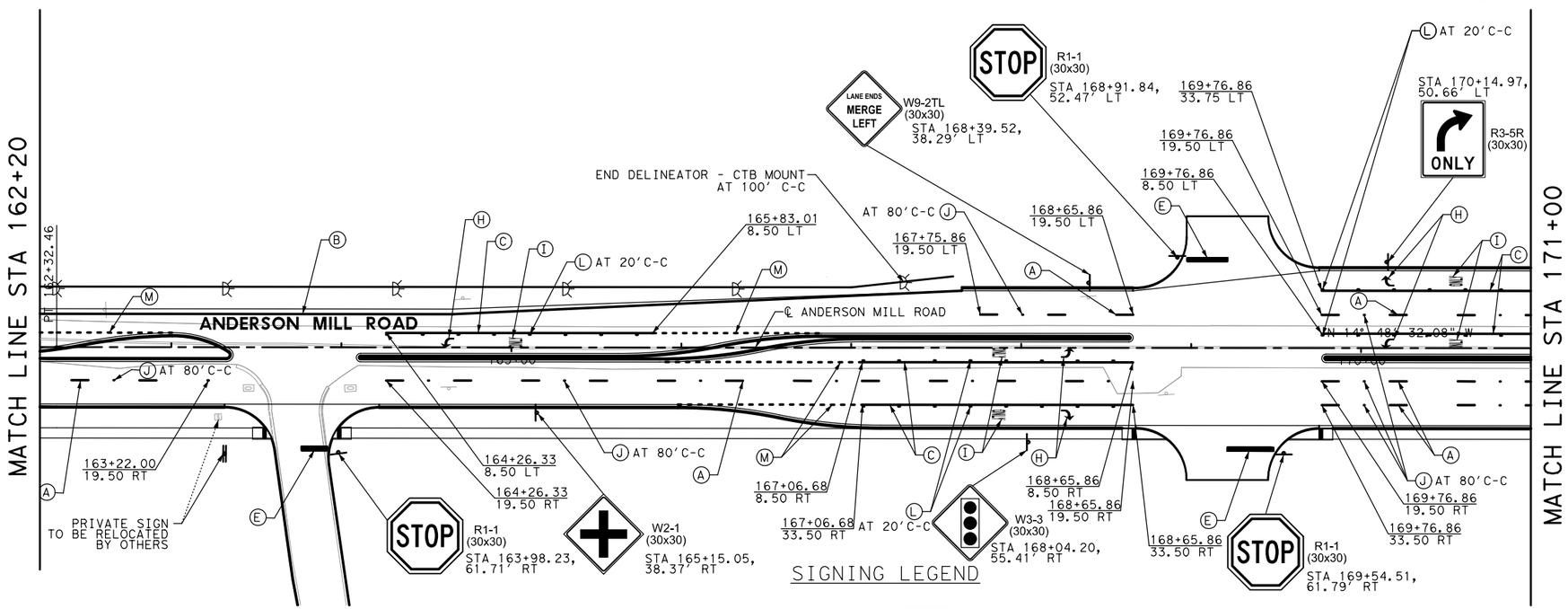

0' 20' 40' 80'

PAVEMENT MARKING LEGEND

- (A) PAV MRK TY I (W)(4")(BRK)
- (B) PAV MRK TY I (W)(4")(SLD)
- (C) PAV MRK TY I (W)(8")(SLD)
- (D) PAV MRK TY I (W)(12")(SLD)
- (E) PAV MRK TY I (W)(24")(SLD)
- (F) PAV MRK TY I (Y)(4")(SLD)
- (G) PAV MRK TY I (W)(4")(DASH)
- (H) PAV MRK TY I (W)(ARROW)
- (I) PAV MRK TY I (W)(WORD)
- (J) REFL PAV MRKR TY II-C-R
- (K) REFL PAV MRKR TY II-A-A
- (L) REFL PAV MRKR TY 1-C
- (M) PAV MRK TY 1 (W)(8")(DASH)
- (N) DEAD END BARRICADE
- DELINEATOR (SW)

NOTE:

ALL STRIPING SHALL BE THERMOPLASTIC 100 MIL AND FOLLOW COA 871S SPEC

NUMBER	DATE	REVISION	APPROVED

STATE OF TEXAS
GREGORY C. CALKINS
111309
LICENSED
PROFESSIONAL ENGINEER
10/06/2016

CEDAR PARK

Binkley & Barfield, Inc
consulting engineers
Texas Registration Number F-257

ANDERSON MILL ROAD
GASPAR BEND TO WHITESTONE BLVD
SIGNING AND STRIPING PLANS
STA 162+20 - END PROJECT

DESIGN BY:	GCC	SCALE:	1"=80'
DRAWN BY:	DSH		
CHECKED BY:	DRE		
APPROVED BY:	BDR	SHEET:	5 OF 5
PROJECT NO:	156402		
DATE:	10/6/2016	PAGE:	198

10/6/2016
8:50:14 AM
...\CADD\SHEETS\PMLY1*AM*05.dgn

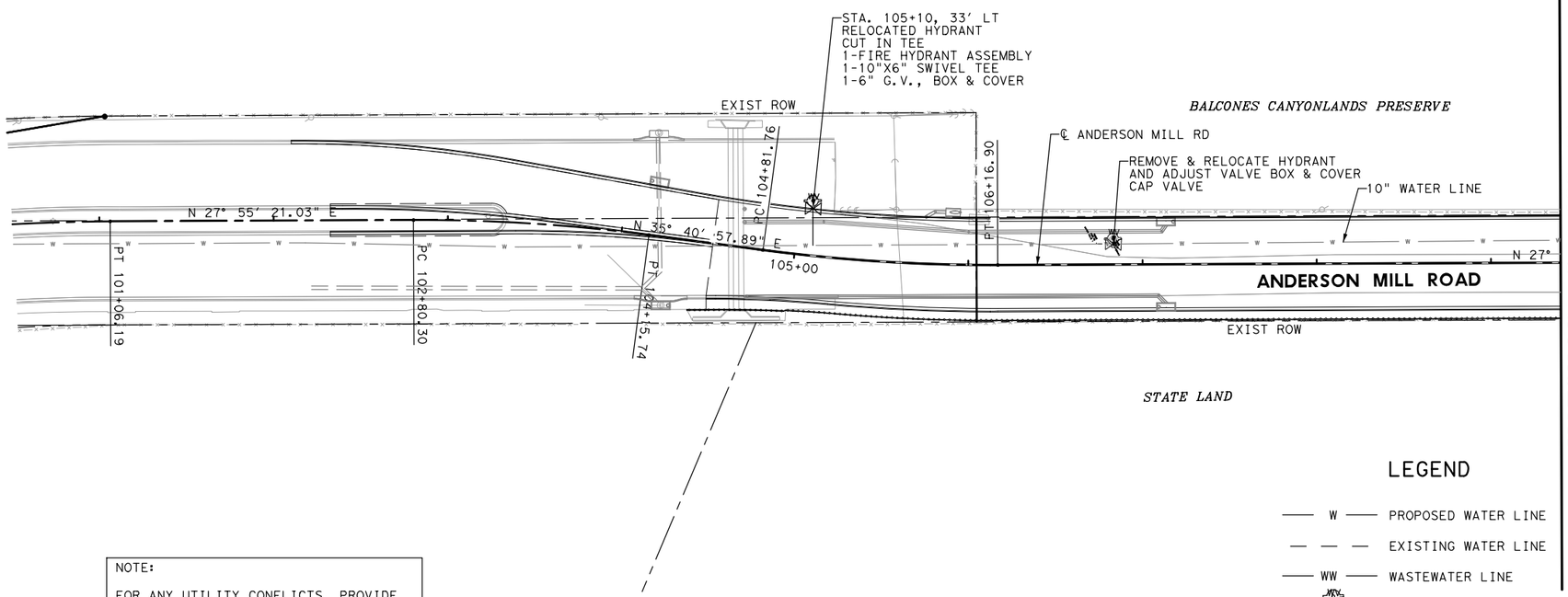

0' 20' 40' 80'

NOTES:

1. CONTRACTOR TO FIELD VERIFY EXISTING UTILITIES AND THEIR LOCATION PRIOR TO CONSTRUCTION.
2. CONTRACTOR TO PROVIDE ALL BENDS, FIXTURES, AND RESTRAINED JOINTS FOR COMPLETE FIRE HYDRANT INSTALLATION.
3. FOR 10" WATER LINE CONFLICT DETAIL, SEE WATER DETAILS.
4. EXISTING WATER LINE VERTICAL & HORIZONTAL LOCATION IS APPROXIMATE. CONTRACTOR TO FIELD VERIFY PRIOR TO CONSTRUCTION.
5. DEPTH OF COVER OF 10" WATER LINE TO BE 48" MINIMUM. REDUCED COVER ONLY ALLOWED WITH WRITTEN APPROVAL FROM THE CITY'S FIELD REPRESENTATIVE.
6. CONTRACTOR TO NOTIFY CITY PUBLIC WORKS DEPARTMENT PRIOR TO RELOCATION OR REMOVAL OF ANY WATER SERVICE, AIR RELEASE, OR ANY VALVE BOX REMOVAL OR INSTALLATION.
7. CONTRACTOR TO PROVIDE ALL BENDS,FIXTURES AND APPURTENANCES FOR COMPLETE AIR RELEASE VALVE INSTALLATION.
8. ALL WATER STUB-OUTS REQUIRE MARKER PIPE. SEE DETAILS.
9. A MINIMUM SEPARATION DISTANCE OF 24" REQUIRED AT ALL WASTEWATER & STORM CROSSINGS. CENTER ONE JOINT OF WATER PIPE AT ALL CROSSINGS. ENCASEMENT OF WATER PIPE REQUIRED IN ACCORDANCE WITH THE TEXAS ADMINISTRATIVE CODE-30TAC, RULE 217.53(7)(C).
10. FOR EXIST. 10" WATER LINE LOCATION, REFERENCE CITY AS-BUILTS (CYPRESS CANYON/ LIME CREEK ROAD WATER IMPROVEMENTS)

NOTE:

FOR ANY UTILITY CONFLICTS, PROVIDE WRITTEN APPROVAL FROM CITY'S FIELD REPRESENTATIVE PRIOR TO CONSTRUCTION.

LEGEND

—— W ——	PROPOSED WATER LINE
— — —	EXISTING WATER LINE
—— WW ——	WASTEWATER LINE
WV	FIRE HYDRANT
WV	GATE VALVE

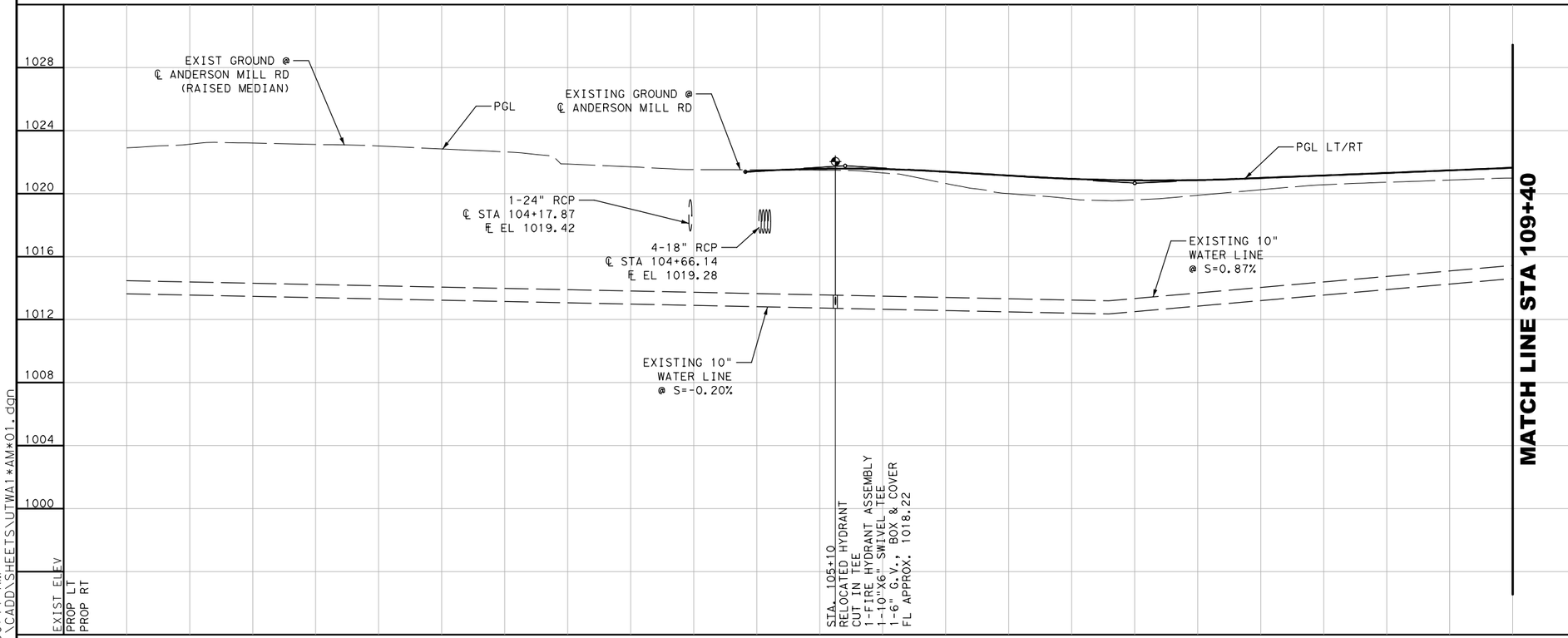

NUMBER	DATE	REVISION	APPROVED

STATE OF TEXAS
REYNALDO GONZALEZ, JR
91803
LICENSED
PROFESSIONAL ENGINEER
10/06/2016

CEDAR PARK

Binkley & Barfield, Inc
consulting engineers
Texas Registration Number F-257

ANDERSON MILL ROAD
GASPAR BEND TO WHITESTONE BLVD
WATER PLANS

BEGIN PROJECT - STA. 109+40

DESIGN BY:	BLJ
DRAWN BY:	BLJ
CHECKED BY:	DRE
APPROVED BY:	RG
PROJECT NO:	156402
DATE:	10/6/2016

SCALE: HORIZ: 1"=40' VERT: 1"= 4'

SHEET: 1 OF 9

PAGE: 199

10/6/2016
8:50:17 AM
...\CADD\SHEETS\UTWA1*AM*01.dgn

LEGEND

- W — PROPOSED WATER LINE
- EXISTING WATER LINE
- WW — WASTEWATER LINE
- FIRE HYDRANT
- GATE VALVE

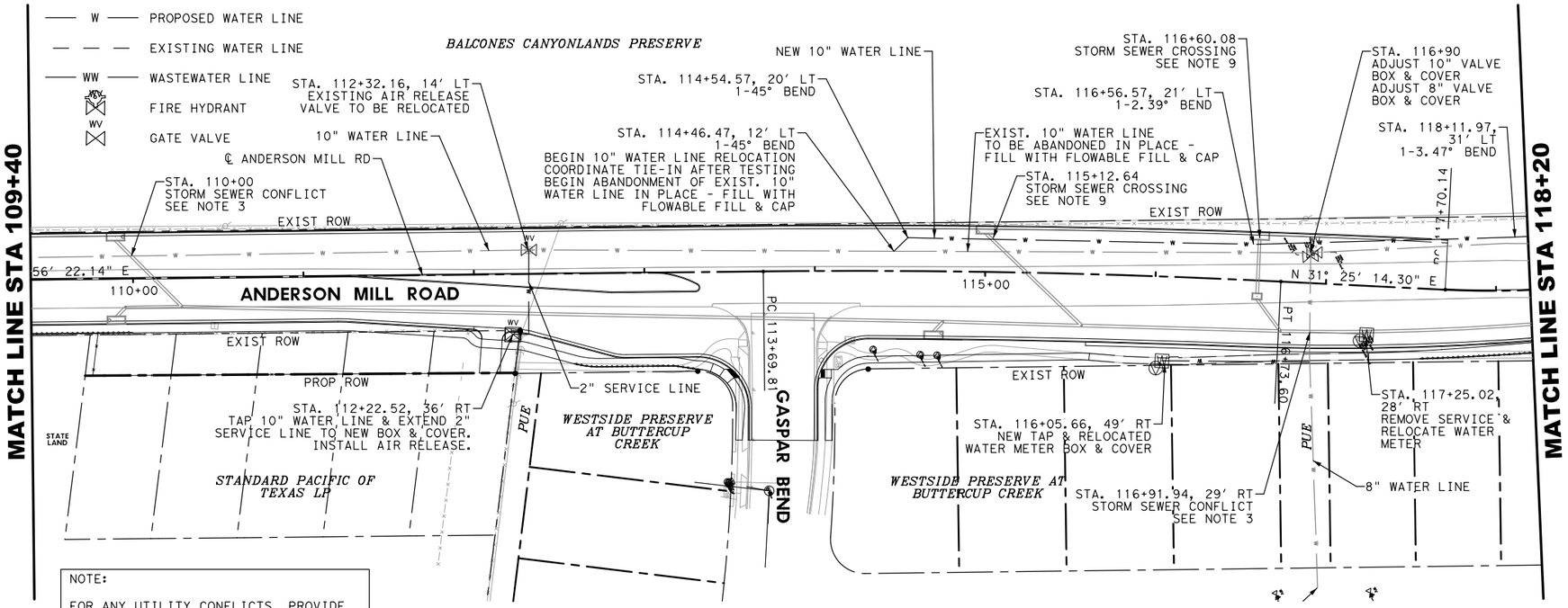

NOTE:

FOR ANY UTILITY CONFLICTS, PROVIDE WRITTEN APPROVAL FROM CITY'S FIELD REPRESENTATIVE PRIOR TO CONSTRUCTION.

0' 20' 40' 80'

NOTES:

1. CONTRACTOR TO FIELD VERIFY EXISTING UTILITIES AND THEIR LOCATION PRIOR TO CONSTRUCTION.
2. CONTRACTOR TO PROVIDE ALL BENDS, FIXTURES, AND RESTRAINED JOINTS FOR COMPLETE FIRE HYDRANT INSTALLATION.
3. FOR 10" WATER LINE CONFLICT DETAIL, SEE WATER DETAILS.
4. EXISTING WATER LINE VERTICAL & HORIZONTAL LOCATION IS APPROXIMATE. CONTRACTOR TO FIELD VERIFY PRIOR TO CONSTRUCTION.
5. DEPTH OF COVER OF 10" WATER LINE TO BE 48" MINIMUM. REDUCED COVER ONLY ALLOWED WITH WRITTEN APPROVAL FROM THE CITY'S FIELD REPRESENTATIVE.
6. CONTRACTOR TO NOTIFY CITY PUBLIC WORKS DEPARTMENT PRIOR TO RELOCATION OR REMOVAL OF ANY WATER SERVICE, AIR RELEASE, OR ANY VALVE BOX REMOVAL OR INSTALLATION.
7. CONTRACTOR TO PROVIDE ALL BENDS, FIXTURES AND APPURTENANCES FOR COMPLETE AIR RELEASE VALVE INSTALLATION.
8. ALL WATER STUB-OUTS REQUIRE MARKER PIPE. SEE DETAILS.
9. A MINIMUM SEPARATION DISTANCE OF 24" REQUIRED AT ALL WASTEWATER & STORM CROSSINGS. CENTER ONE JOINT OF WATER PIPE AT ALL CROSSINGS. ENCASEMENT OF WATER PIPE REQUIRED IN ACCORDANCE WITH THE TEXAS ADMINISTRATIVE CODE-30TAC, RULE 217.53(7)(C).
10. FOR EXIST. 10" WATER LINE LOCATION, REFERENCE CITY AS-BUILTS (CYPRESS CANYON/ LIME CREEK ROAD WATER IMPROVEMENTS)

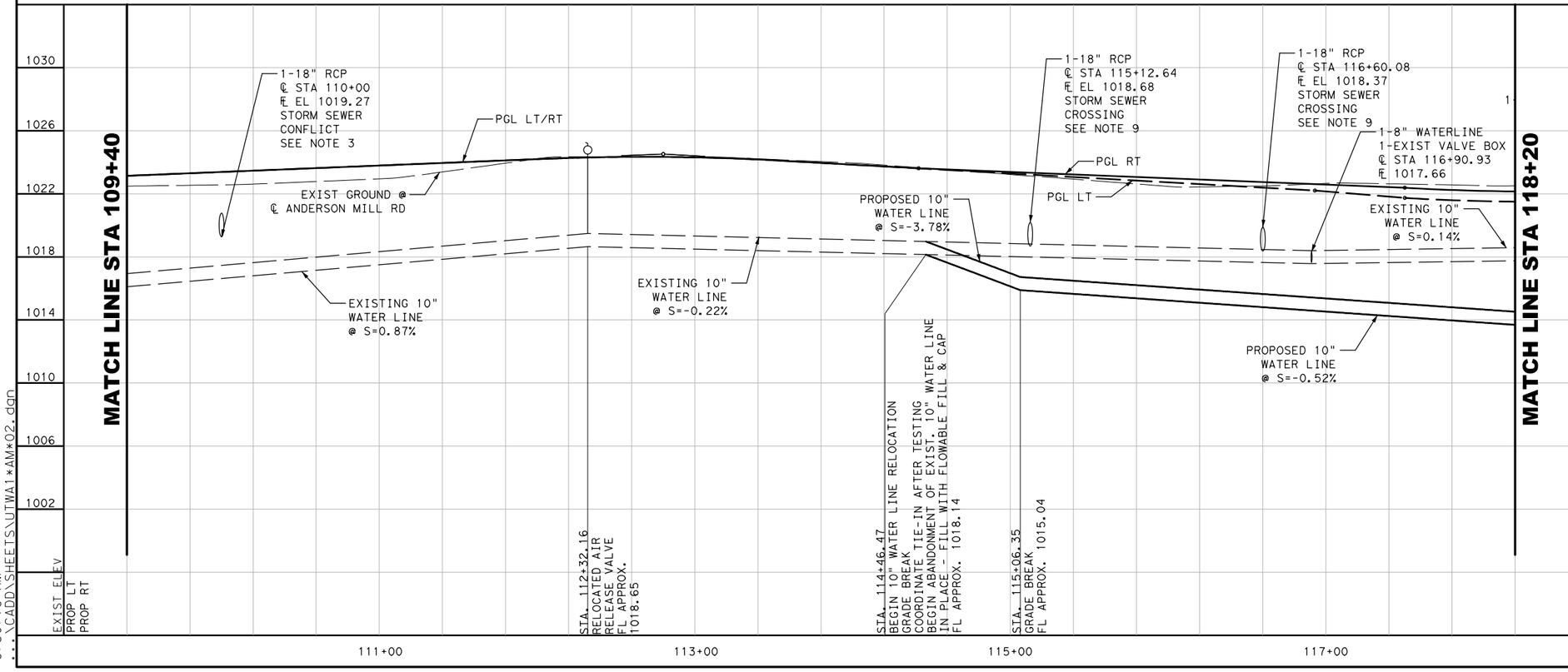

NUMBER	DATE	REVISION	APPROVED

STATE OF TEXAS
REYNALDO GONZALEZ, JR
91803
LICENSED
PROFESSIONAL ENGINEER
10/06/2016

CEDAR PARK

Binkley & Barfield, Inc
consulting engineers
Texas Registration Number F-257

ANDERSON MILL ROAD
GASPAR BEND TO WHITESTONE BLVD
WATER PLANS
STA. 109+40 - STA. 118+20

DESIGN BY:	BLJ	SCALE:	HORIZ:1"=40' VERT: 1"= 4'
DRAWN BY:	BLJ		
CHECKED BY:	DRE		
APPROVED BY:	RG	SHEET:	2 OF 9
PROJECT NO:	156402		
DATE:	10/6/2016	PAGE:	200

10/6/2016
8:50:18 AM
...\CADD\SHEETS\UTWA1*AM*02.dgn

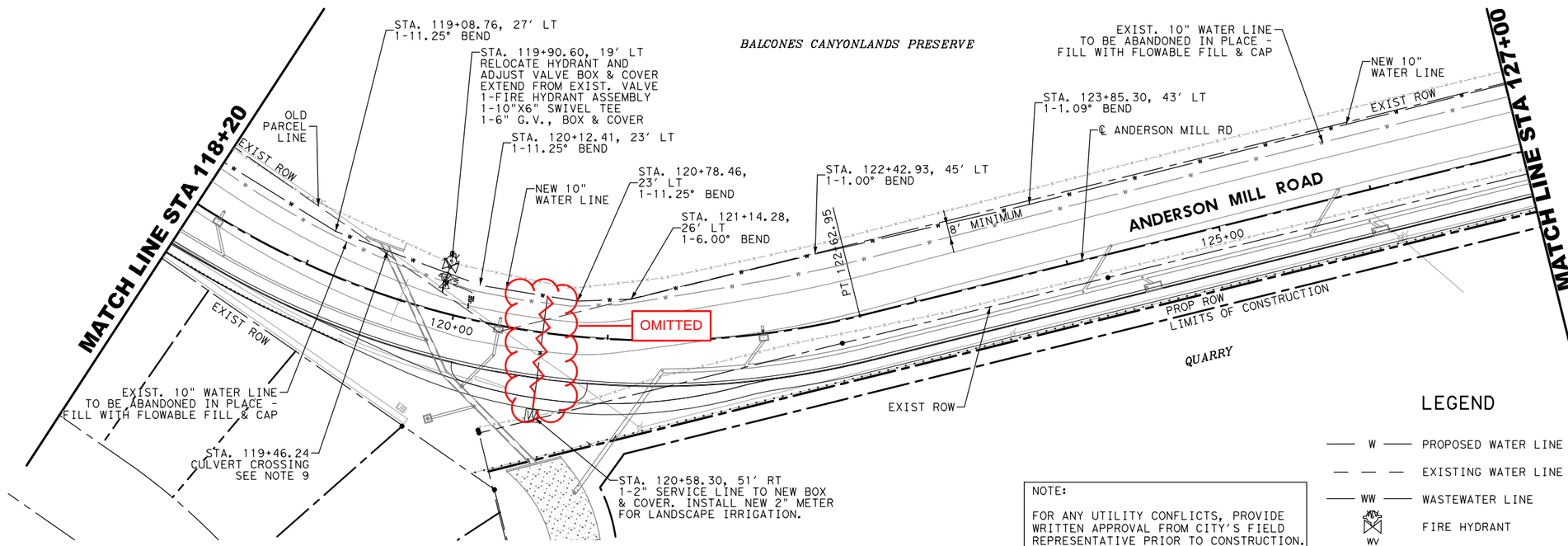

NOTE:

FOR ANY UTILITY CONFLICTS, PROVIDE WRITTEN APPROVAL FROM CITY'S FIELD REPRESENTATIVE PRIOR TO CONSTRUCTION.

LEGEND

—— W ——	PROPOSED WATER LINE
— — —	EXISTING WATER LINE
—— WW ——	WASTEWATER LINE
FDV	FIRE HYDRANT
WV	GATE VALVE

NOTES:

1. CONTRACTOR TO FIELD VERIFY EXISTING UTILITIES AND THEIR LOCATION PRIOR TO CONSTRUCTION.
2. CONTRACTOR TO PROVIDE ALL BENDS, FIXTURES, AND RESTRAINED JOINTS FOR COMPLETE FIRE HYDRANT INSTALLATION.
3. FOR 10" WATER LINE CONFLICT DETAIL, SEE WATER DETAILS.
4. EXISTING WATER LINE VERTICAL & HORIZONTAL LOCATION IS APPROXIMATE. CONTRACTOR TO FIELD VERIFY PRIOR TO CONSTRUCTION.
5. DEPTH OF COVER OF 10" WATER LINE TO BE 48" MINIMUM. REDUCED COVER ONLY ALLOWED WITH WRITTEN APPROVAL FROM THE CITY'S FIELD REPRESENTATIVE.
6. CONTRACTOR TO NOTIFY CITY PUBLIC WORKS DEPARTMENT PRIOR TO RELOCATION OR REMOVAL OF ANY WATER SERVICE, AIR RELEASE, OR ANY VALVE BOX REMOVAL OR INSTALLATION.
7. CONTRACTOR TO PROVIDE ALL BENDS, FIXTURES AND APPURTENANCES FOR COMPLETE AIR RELEASE VALVE INSTALLATION.
8. ALL WATER STUB-OUTS REQUIRE MARKER PIPE. SEE DETAILS.
9. A MINIMUM SEPARATION DISTANCE OF 24" REQUIRED AT ALL WASTEWATER & STORM CROSSINGS. CENTER ONE JOINT OF WATER PIPE AT ALL CROSSINGS. ENCASEMENT OF WATER PIPE REQUIRED IN ACCORDANCE WITH THE TEXAS ADMINISTRATIVE CODE-30TAC, RULE 217.53(7)(C).
10. FOR EXIST. 10" WATER LINE LOCATION, REFERENCE CITY AS-BUILTS (CYPRESS CANYON/ LIME CREEK ROAD WATER IMPROVEMENTS)

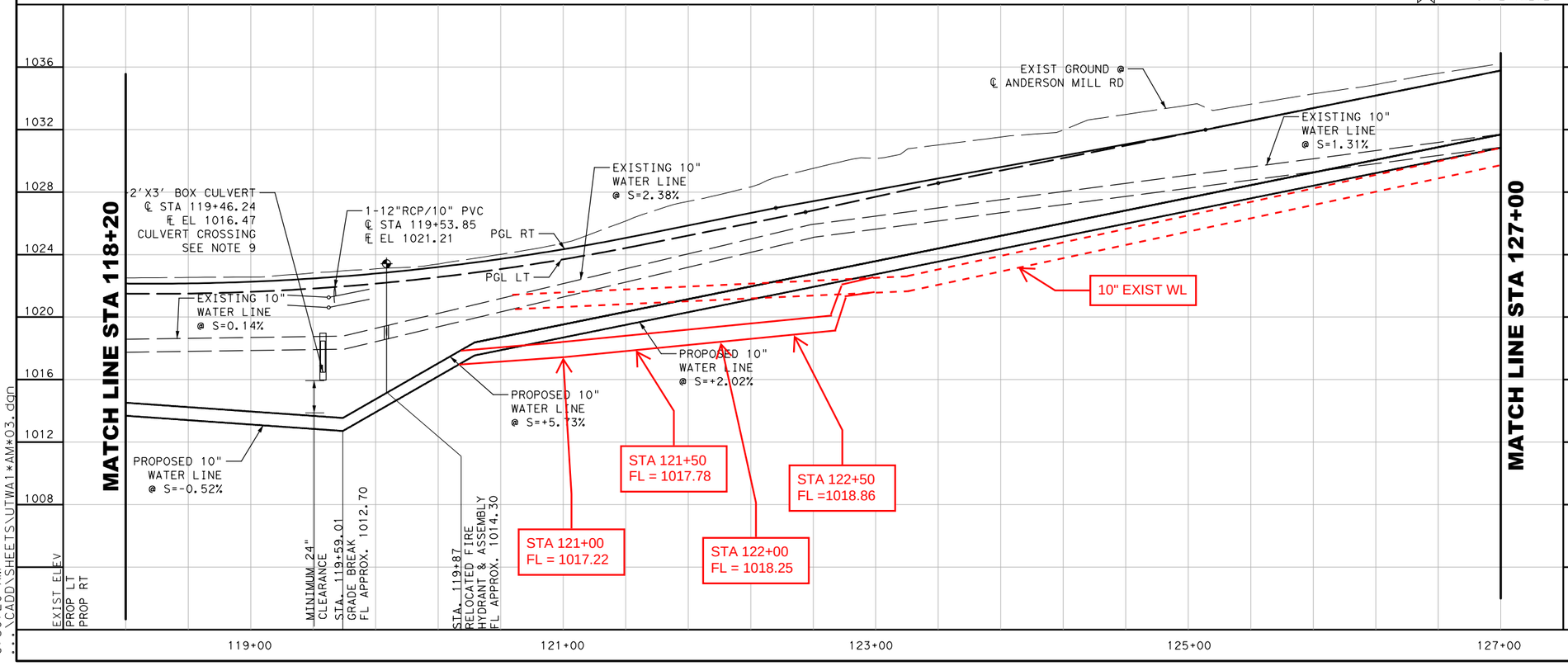

NUMBER	DATE	REVISION	APPROVED

STATE OF TEXAS
REYNALDO GONZALEZ, JR
91803
LICENSED
PROFESSIONAL ENGINEER
10/06/2016

CEDAR PARK

Binkley & Barfield, Inc
consulting engineers
Texas Registration Number F-257

ANDERSON MILL ROAD
GASPAR BEND TO WHITESTONE BLVD
WATER PLANS
STA. 118+20 - STA. 127+00

DESIGN BY:	BLJ	SCALE:	HORIZ:1"=40' VERT: 1"= 4'
DRAWN BY:	BLJ		
CHECKED BY:	DRE	SHEET:	3 OF 9
APPROVED BY:	RG		
PROJECT NO:	156402	PAGE:	201
DATE:	10/6/2016		

10/6/2016
8:50:20 AM
...\CADD\SHEETS\UTWA1*AM*03.dgn

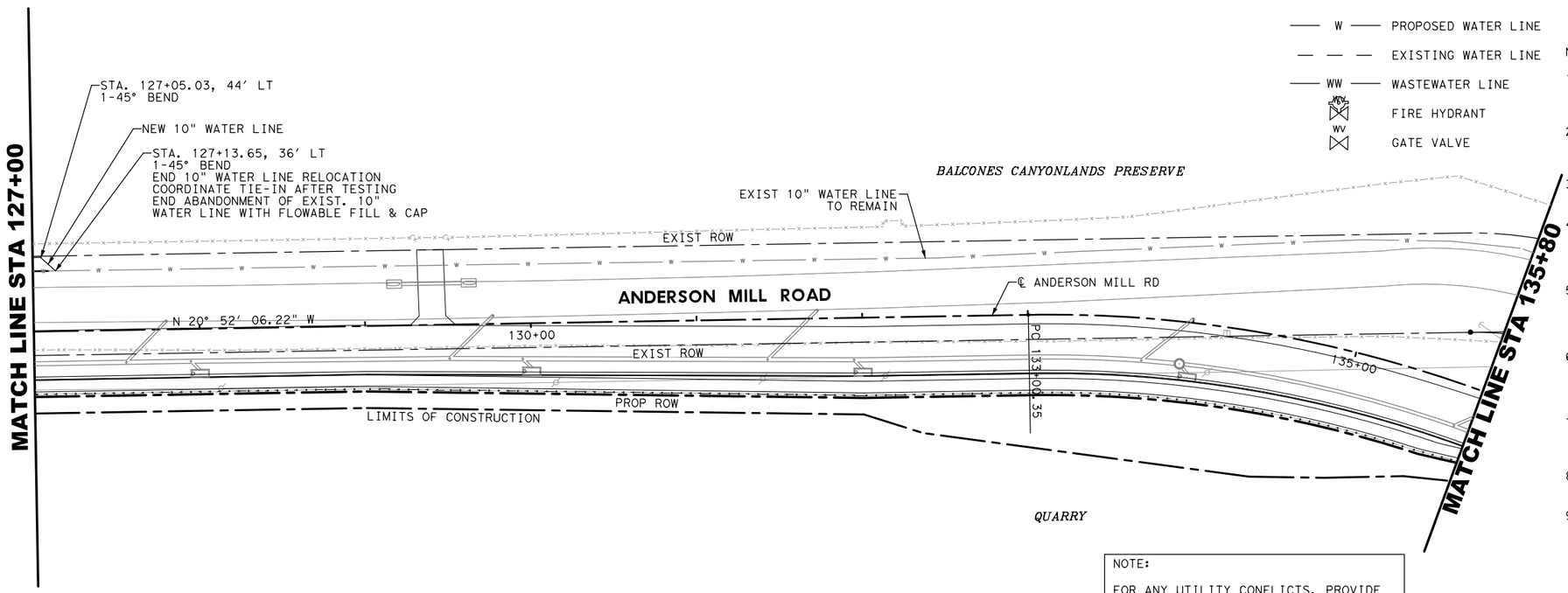

LEGEND

- W — PROPOSED WATER LINE
- EXISTING WATER LINE
- WW — WASTEWATER LINE
- FIRE HYDRANT
- WV — GATE VALVE

0' 20' 40' 80'

NOTE:

FOR ANY UTILITY CONFLICTS, PROVIDE WRITTEN APPROVAL FROM CITY'S FIELD REPRESENTATIVE PRIOR TO CONSTRUCTION.

NOTES:

1. CONTRACTOR TO FIELD VERIFY EXISTING UTILITIES AND THEIR LOCATION PRIOR TO CONSTRUCTION.
2. CONTRACTOR TO PROVIDE ALL BENDS, FIXTURES, AND RESTRAINED JOINTS FOR COMPLETE FIRE HYDRANT INSTALLATION.
3. FOR 10" WATER LINE CONFLICT DETAIL, SEE WATER DETAILS.
4. EXISTING WATER LINE VERTICAL & HORIZONTAL LOCATION IS APPROXIMATE. CONTRACTOR TO FIELD VERIFY PRIOR TO CONSTRUCTION.
5. DEPTH OF COVER OF 10" WATER LINE TO BE 48" MINIMUM. REDUCED COVER ONLY ALLOWED WITH WRITTEN APPROVAL FROM THE CITY'S FIELD REPRESENTATIVE.
6. CONTRACTOR TO NOTIFY CITY PUBLIC WORKS DEPARTMENT PRIOR TO RELOCATION OR REMOVAL OF ANY WATER SERVICE, AIR RELEASE, OR ANY VALVE BOX REMOVAL OR INSTALLATION.
7. CONTRACTOR TO PROVIDE ALL BENDS, FIXTURES AND APPURTENANCES FOR COMPLETE AIR RELEASE VALVE INSTALLATION.
8. ALL WATER STUB-OUTS REQUIRE MARKER PIPE. SEE DETAILS.
9. A MINIMUM SEPARATION DISTANCE OF 24" REQUIRED AT ALL WASTEWATER & STORM CROSSINGS. CENTER ONE JOINT OF WATER PIPE AT ALL CROSSINGS. ENCASEMENT OF WATER PIPE REQUIRED IN ACCORDANCE WITH THE TEXAS ADMINISTRATIVE CODE-30TAC, RULE 217.53(7)(C).
10. FOR EXIST. 10" WATER LINE LOCATION, REFERENCE CITY AS-BUILTS (CYPRESS CANYON/ LIME CREEK ROAD WATER IMPROVEMENTS)

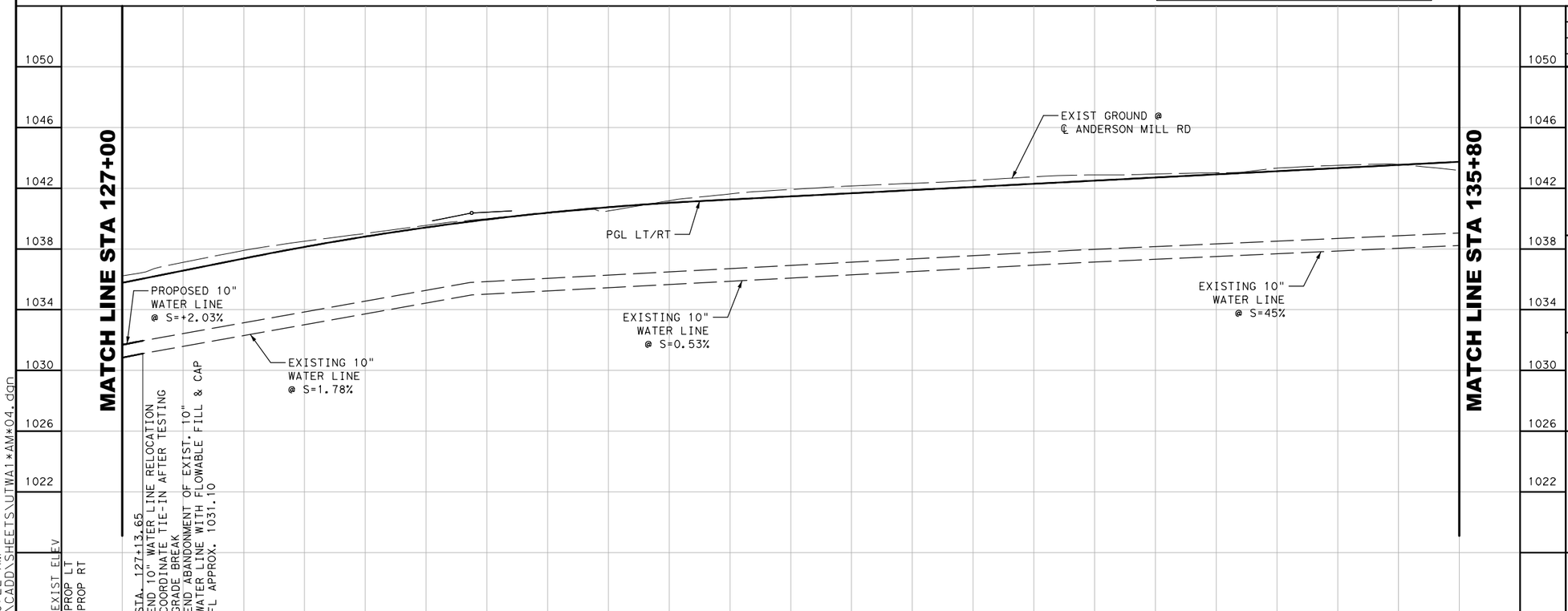

NUMBER	DATE	REVISION	APPROVED

STATE OF TEXAS
REYNALDO GONZALEZ, JR
91803
LICENSED
PROFESSIONAL ENGINEER
10/06/2016

CEDAR PARK

Binkley & Barfield, Inc
consulting engineers
Texas Registration Number F-257

ANDERSON MILL ROAD
GASPAR BEND TO WHITESTONE BLVD
WATER PLANS
STA. 127+00 - STA. 135+80

DESIGN BY:	BLJ
DRAWN BY:	BLJ
CHECKED BY:	DRE
APPROVED BY:	RG
PROJECT NO:	156402
DATE:	10/6/2016

SCALE: HORIZ: 1"=40' VERT: 1"= 4'

SHEET: 4 OF 9

PAGE: 202

10/6/2016
8:50:22 AM
...\CADD\SHEETS\UTWA1*AM*04.dgn

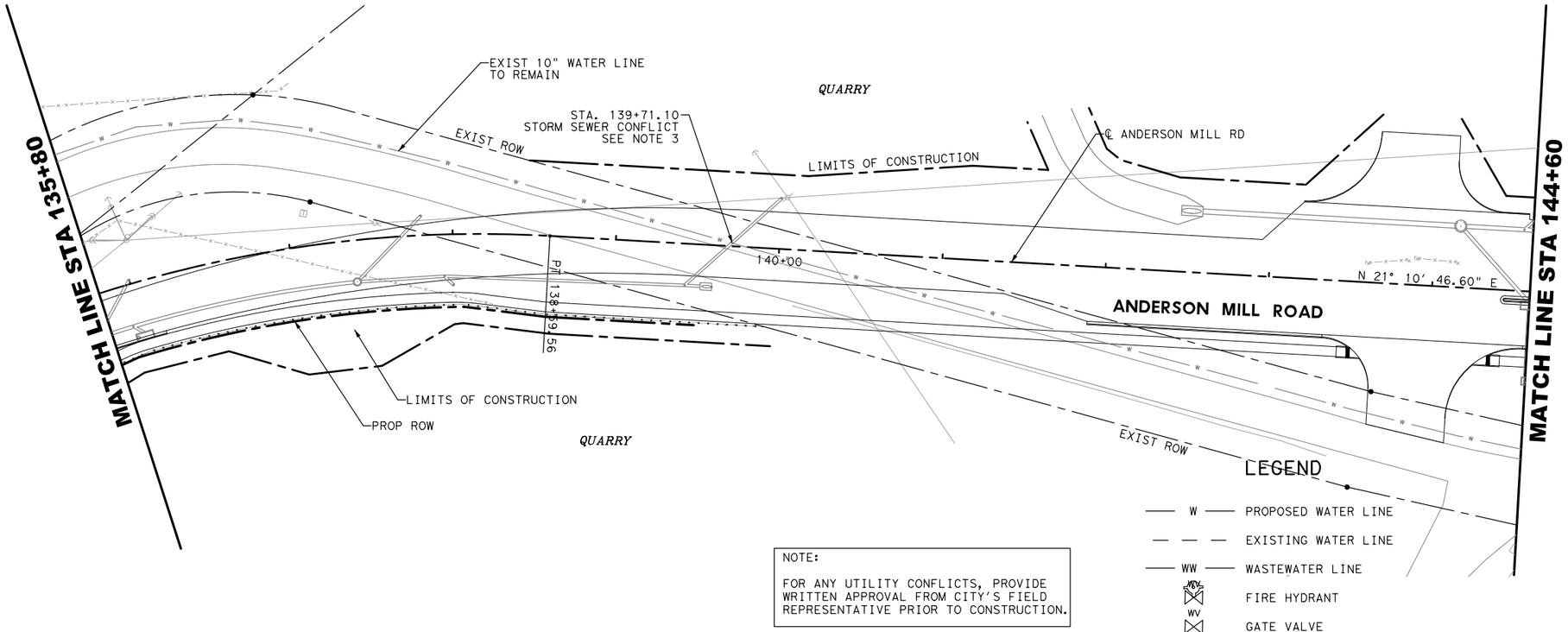

NOTE:

FOR ANY UTILITY CONFLICTS, PROVIDE WRITTEN APPROVAL FROM CITY'S FIELD REPRESENTATIVE PRIOR TO CONSTRUCTION.

LEGEND

- W — PROPOSED WATER LINE
- EXISTING WATER LINE
- WW — WASTEWATER LINE
- WV — FIRE HYDRANT
- WV — GATE VALVE

NOTES:

1. CONTRACTOR TO FIELD VERIFY EXISTING UTILITIES AND THEIR LOCATION PRIOR TO CONSTRUCTION.
2. CONTRACTOR TO PROVIDE ALL BENDS, FIXTURES, AND RESTRAINED JOINTS FOR COMPLETE FIRE HYDRANT INSTALLATION.
3. FOR 10" WATER LINE CONFLICT DETAIL, SEE WATER DETAILS.
4. EXISTING WATER LINE VERTICAL & HORIZONTAL LOCATION IS APPROXIMATE. CONTRACTOR TO FIELD VERIFY PRIOR TO CONSTRUCTION.
5. DEPTH OF COVER OF 10" WATER LINE TO BE 48" MINIMUM. REDUCED COVER ONLY ALLOWED WITH WRITTEN APPROVAL FROM THE CITY'S FIELD REPRESENTATIVE.
6. CONTRACTOR TO NOTIFY CITY PUBLIC WORKS DEPARTMENT PRIOR TO RELOCATION OR REMOVAL OF ANY WATER SERVICE, AIR RELEASE, OR ANY VALVE BOX REMOVAL OR INSTALLATION.
7. CONTRACTOR TO PROVIDE ALL BENDS, FIXTURES AND APPURTENANCES FOR COMPLETE AIR RELEASE VALVE INSTALLATION.
8. ALL WATER STUB-OUTS REQUIRE MARKER PIPE. SEE DETAILS.
9. A MINIMUM SEPARATION DISTANCE OF 24" REQUIRED AT ALL WASTEWATER & STORM CROSSINGS. CENTER ONE JOINT OF WATER PIPE AT ALL CROSSINGS. ENCASEMENT OF WATER PIPE REQUIRED IN ACCORDANCE WITH THE TEXAS ADMINISTRATIVE CODE-30TAC, RULE 217.53(7)(C).
10. FOR EXIST. 10" WATER LINE LOCATION, REFERENCE CITY AS-BUILTS (CYPRESS CANYON/ LIME CREEK ROAD WATER IMPROVEMENTS)

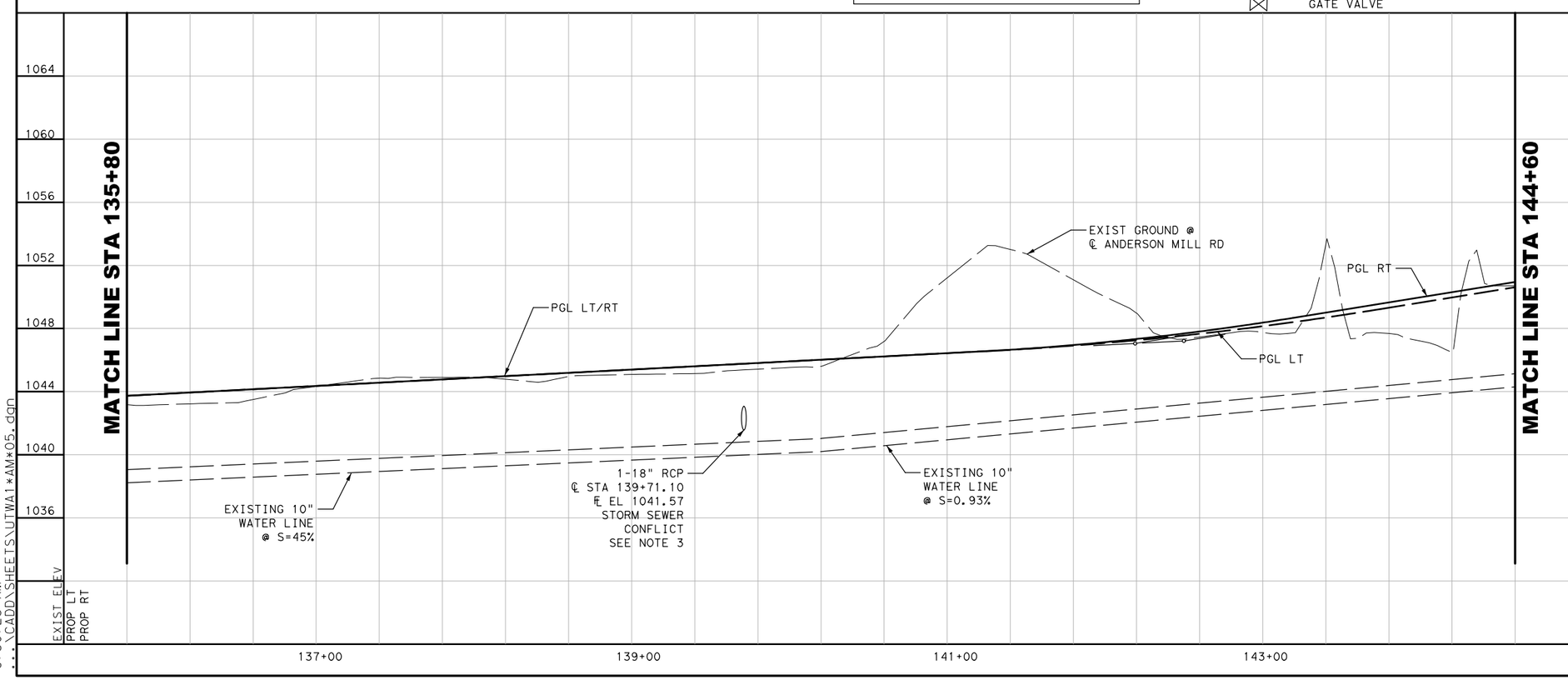

NUMBER	DATE	REVISION	APPROVED

STATE OF TEXAS
REYNALDO GONZALEZ, JR
91803
LICENSED
PROFESSIONAL ENGINEER
10/06/2016

CEDAR PARK

Binkley & Barfield, Inc
consulting engineers
Texas Registration Number F-257

ANDERSON MILL ROAD
GASPAR BEND TO WHITESTONE BLVD
WATER PLANS
STA. 135+80 - STA. 144+60

DESIGN BY:	BLJ
DRAWN BY:	BLJ
CHECKED BY:	DRE
APPROVED BY:	RG
PROJECT NO:	156402
DATE:	10/6/2016

SCALE: HORIZ: 1"=40' VERT: 1"= 4'

SHEET: 5 OF 9

PAGE: 203

10/6/2016
8:50:23 AM
...\CADD\SHEETS\UTWA1*AM*05.dgn

LEGEND

- W — PROPOSED WATER LINE
- EXISTING WATER LINE
- WW — WASTEWATER LINE
- WFH — FIRE HYDRANT
- WV — GATE VALVE

NOTE:

FOR ANY UTILITY CONFLICTS, PROVIDE WRITTEN APPROVAL FROM CITY'S FIELD REPRESENTATIVE PRIOR TO CONSTRUCTION.

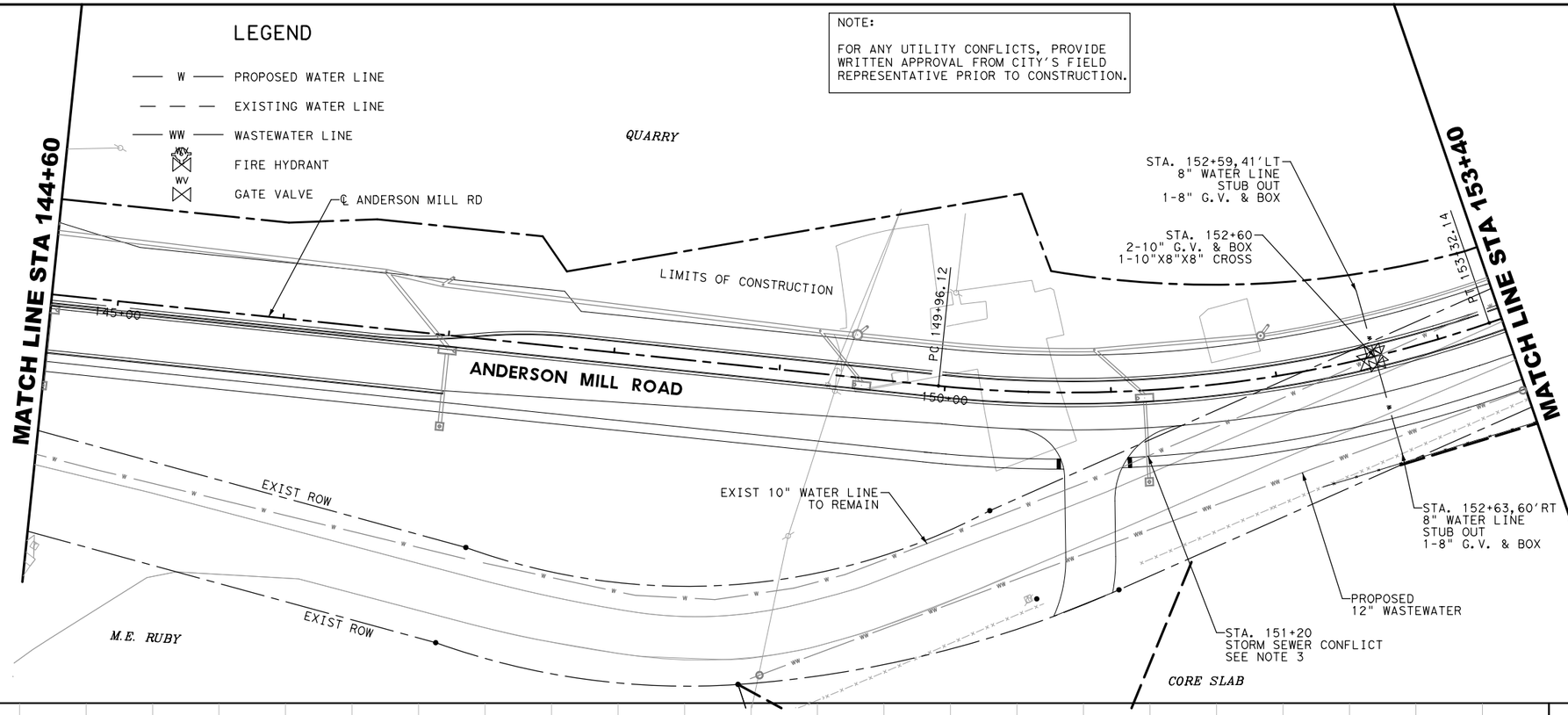

NOTES:

0' 20' 40' 80'

1. CONTRACTOR TO FIELD VERIFY EXISTING UTILITIES AND THEIR LOCATION PRIOR TO CONSTRUCTION.
2. CONTRACTOR TO PROVIDE ALL BENDS, FIXTURES, AND RESTRAINED JOINTS FOR COMPLETE FIRE HYDRANT INSTALLATION.
3. FOR 10" WATER LINE CONFLICT DETAIL, SEE WATER DETAILS.
4. EXISTING WATER LINE VERTICAL & HORIZONTAL LOCATION IS APPROXIMATE. CONTRACTOR TO FIELD VERIFY PRIOR TO CONSTRUCTION.
5. DEPTH OF COVER OF 10" WATER LINE TO BE 48" MIN. REDUCED COVER ONLY ALLOWED WITH WRITTEN APPROVAL FROM THE CITY'S FIELD REPRESENTATIVE.
6. CONTRACTOR TO NOTIFY CITY PUBLIC WORKS DEPARTMENT PRIOR TO RELOCATION OR REMOVAL OF ANY WATER SERVICE, AIR RELEASE, OR ANY VALVE BOX REMOVAL OR INSTALLATION.
7. CONTRACTOR TO PROVIDE ALL BENDS, FIXTURES AND APPURTENANCES FOR COMPLETE AIR RELEASE VALVE INSTALLATION.
8. ALL WATER STUB-OUTS REQUIRE MARKER PIPE. SEE DETAILS.
9. FOR PROPOSED WASTEWATER, SEE WASTEWATER PLANS.
10. A MINIMUM SEPARATION DISTANCE OF 24" REQUIRED AT ALL WASTEWATER & STORM CROSSINGS. CENTER ONE JOINT OF WATER PIPE AT ALL CROSSINGS. ENCASEMENT OF WATER PIPE REQUIRED IN ACCORDANCE WITH THE TEXAS ADMINISTRATIVE CODE - 30TAC,RULE 217.53(7)(C).
11. ALL WATER STUB OUTS SHALL BE AT A MINIMUM 1.00% SLOPE WITH A MINIMUM OF 3' COVER AT TERMINATION.
12. FOR EXIST. 10" WATER LINE LOCATION, REFERENCE CITY AS-BUILTS (CYPRESS CANYON/LIME CREEK ROAD WATER IMPROVEMENTS)

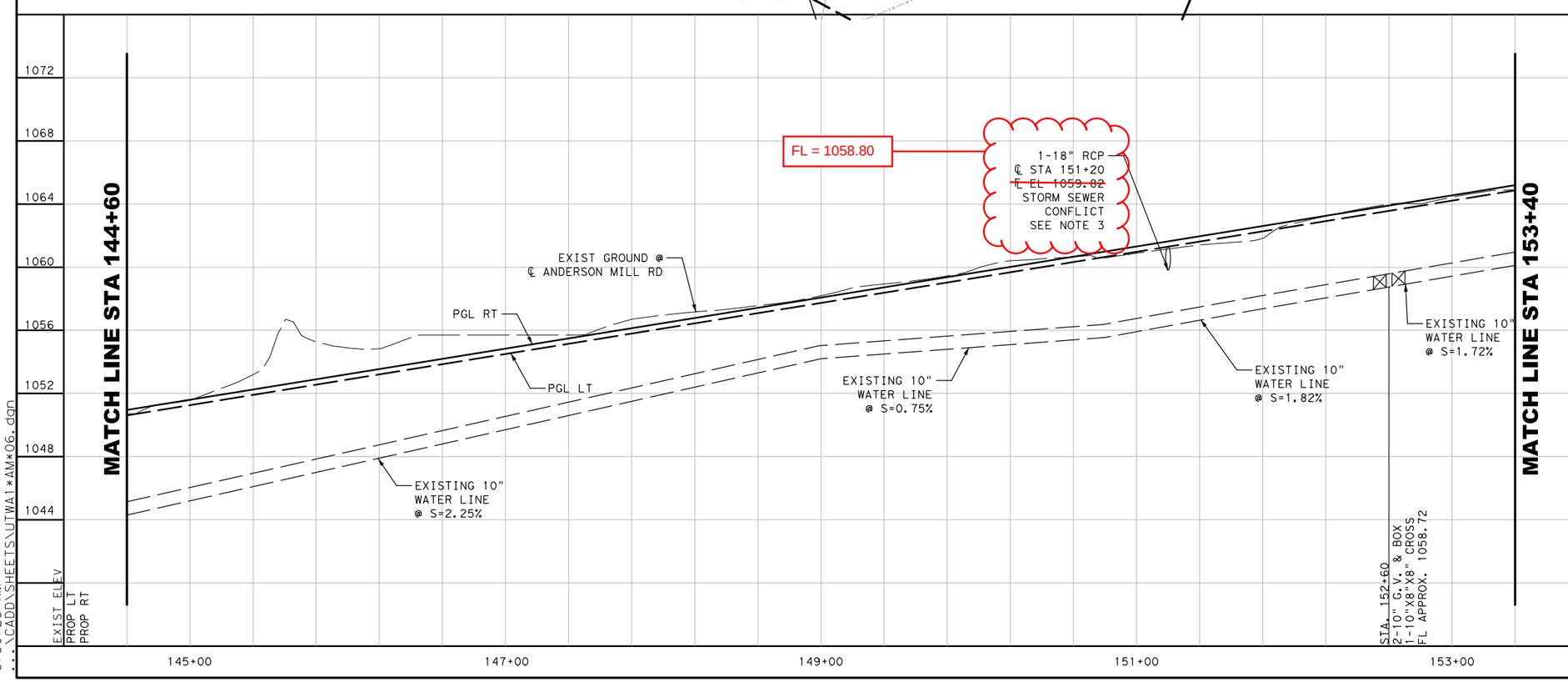

NUMBER	DATE	REVISION	APPROVED

STATE OF TEXAS
REYNALDO GONZALEZ, JR
91803
LICENSED
PROFESSIONAL ENGINEER
10/06/2016

CEDAR PARK

Binkley & Barfield, Inc
consulting engineers
Texas Registration Number F-257

ANDERSON MILL ROAD
GASPAR BEND TO WHITESTONE BLVD
WATER PLANS
STA. 144+60 - STA. 153+40

DESIGN BY:	BLJ	SCALE: HORIZ:	1"=40'
DRAWN BY:	BLJ	VERT:	1"= 4'
CHECKED BY:	DRE	SHEET:	6 OF 9
APPROVED BY:	RG		
PROJECT NO:	156402	PAGE:	204
DATE:	10/6/2016		

10/6/2016
8:50:25 AM
...\CADD\SHEETS\UTWA1*AM*06.dgn

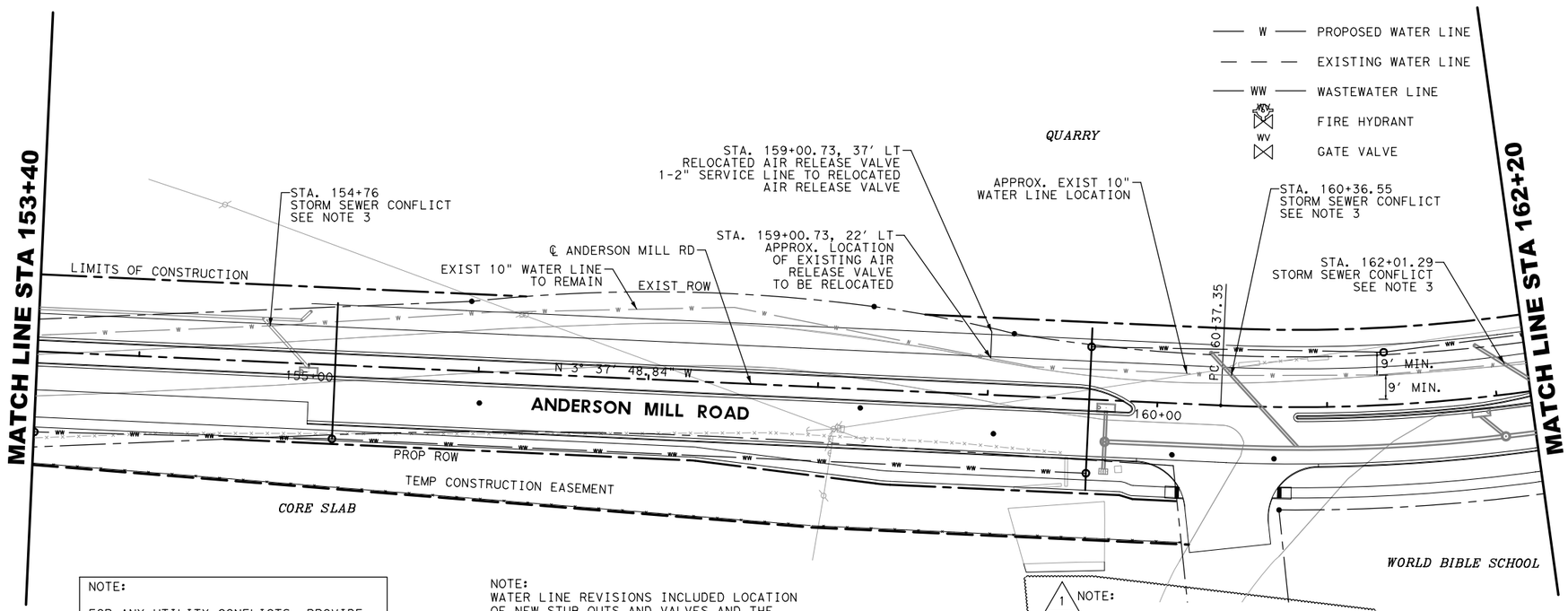

LEGEND

- W — PROPOSED WATER LINE
- EXISTING WATER LINE
- WW — WASTEWATER LINE
- FIRE HYDRANT
- WV — GATE VALVE

0' 20' 40' 80'

NOTES:

1. CONTRACTOR TO FIELD VERIFY EXISTING UTILITIES AND THEIR LOCATION PRIOR TO CONSTRUCTION.
2. CONTRACTOR TO PROVIDE ALL BENDS, FIXTURES, AND RESTRAINED JOINTS FOR COMPLETE FIRE HYDRANT INSTALLATION.
3. FOR 10" WATER LINE CONFLICT DETAIL, SEE WATER DETAILS.
4. EXISTING WATER LINE VERTICAL & HORIZONTAL LOCATION IS APPROXIMATE. CONTRACTOR TO FIELD VERIFY PRIOR TO CONSTRUCTION.
5. DEPTH OF COVER OF 10" WATER LINE TO BE 48" MIN. REDUCED COVER ONLY ALLOWED WITH WRITTEN APPROVAL FROM THE CITY'S FIELD REPRESENTATIVE.
6. CONTRACTOR TO NOTIFY CITY PUBLIC WORKS DEPARTMENT PRIOR TO RELOCATION OR REMOVAL OF ANY WATER SERVICE, AIR RELEASE, OR ANY VALVE BOX REMOVAL OR INSTALLATION.
7. CONTRACTOR TO PROVIDE ALL BENDS, FIXTURES AND APPURTENANCES FOR COMPLETE AIR RELEASE VALVE INSTALLATION.
8. ALL WATER STUB-OUTS REQUIRE MARKER PIPE. SEE DETAILS.
9. FOR PROPOSED WASTEWATER, SEE WASTEWATER PLANS.
10. A MINIMUM SEPARATION DISTANCE OF 24" REQUIRED AT ALL WASTEWATER & STORM CROSSINGS. CENTER ONE JOINT OF WATER PIPE AT ALL CROSSINGS. ENCASEMENT OF WATER PIPE REQUIRED IN ACCORDANCE WITH THE TEXAS ADMINISTRATIVE CODE - 30TAC,RULE 217.53(7)(C).
11. ALL WATER STUB OUTS SHALL BE AT A MINIMUM 1.00% SLOPE WITH A MINIMUM OF 3' COVER AT TERMINATION.
12. FOR EXIST. 10" WATER LINE LOCATION, REFERENCE CITY AS-BUILTS (CYPRESS CANYON/LIME CREEK ROAD WATER IMPROVEMENTS)

NOTE:

FOR ANY UTILITY CONFLICTS, PROVIDE WRITTEN APPROVAL FROM CITY'S FIELD REPRESENTATIVE PRIOR TO CONSTRUCTION.

NOTE:
WATER LINE REVISIONS INCLUDED LOCATION OF NEW STUB OUTS AND VALVES AND THE APPROX. EXISTING 10" WATER LINE LOCATION, BASED ON CONTRACTOR'S SURVEY. ALL REVISIONS ARE IN PLAN VIEW.

1 NOTE:
CONTRACTOR TO MAINTAIN A MINIMUM OF 9' CLEAR BETWEEN OUTSIDE OF WASTEWATER MANHOLE AND OUTSIDE OF 10" WATER LINE (HORIZ.) AND A MINIMUM OF 2' CLEAR (VERT.).

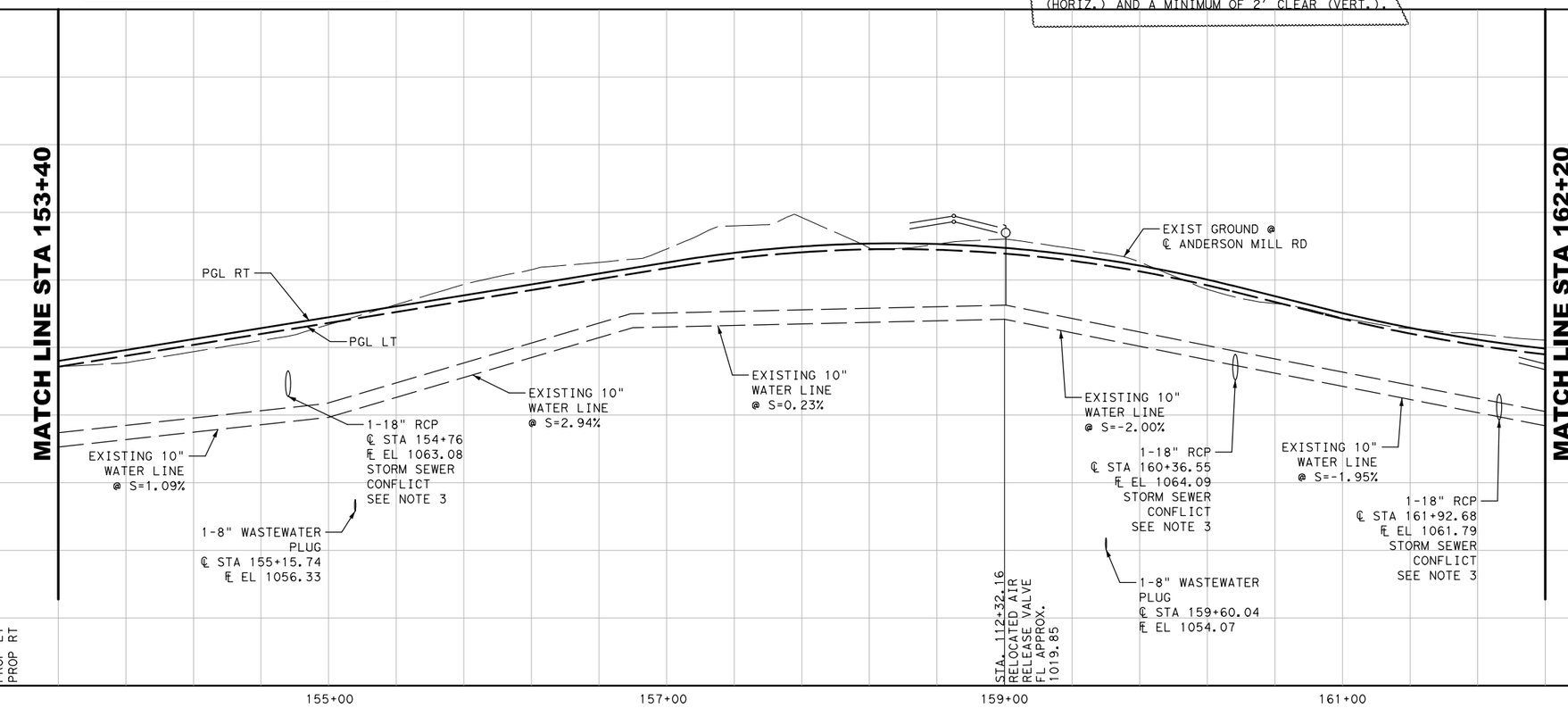

NUMBER	DATE	REVISION	APPROVED
1	5/31/17	ADJUSTED EXIST WATER LOCATION & NEW STUBOUTS	DRE

STATE OF TEXAS
DENNIS R. ECKER
119381
LICENSED
PROFESSIONAL ENGINEER

STATE OF TEXAS
REYNALDO GONZALEZ, JR
91803
LICENSED
PROFESSIONAL ENGINEER

10/06/2016

CEDAR PARK

Binkley & Barfield, Inc
consulting engineers
Texas Registration Number F-257

ANDERSON MILL ROAD
GASPAR BEND TO WHITESTONE BLVD
WATER PLANS
STA. 153+40 - STA. 162+20

DESIGN BY: BLJ
DRAWN BY: BLJ
CHECKED BY: DRE
APPROVED BY: RG
PROJECT NO: 156402
DATE: 6/20/2017

SCALE: HORIZ: 1"=40' VERT: 1"= 4'

SHEET: 7 OF 9

PAGE: UTWA1_AM_07

6/20/2017
12:08:39 PM
\\bzaus\data\bbi\trans\156402*Anderson*Mill*Road*North\CADD\SHEETS\UTWA1*AM*07.dgn

LEGEND

- W — PROPOSED WATER LINE
- EXISTING WATER LINE
- WW — WASTEWATER LINE
- FIRE HYDRANT
- GATE VALVE

0′ 20′ 40′ 80′

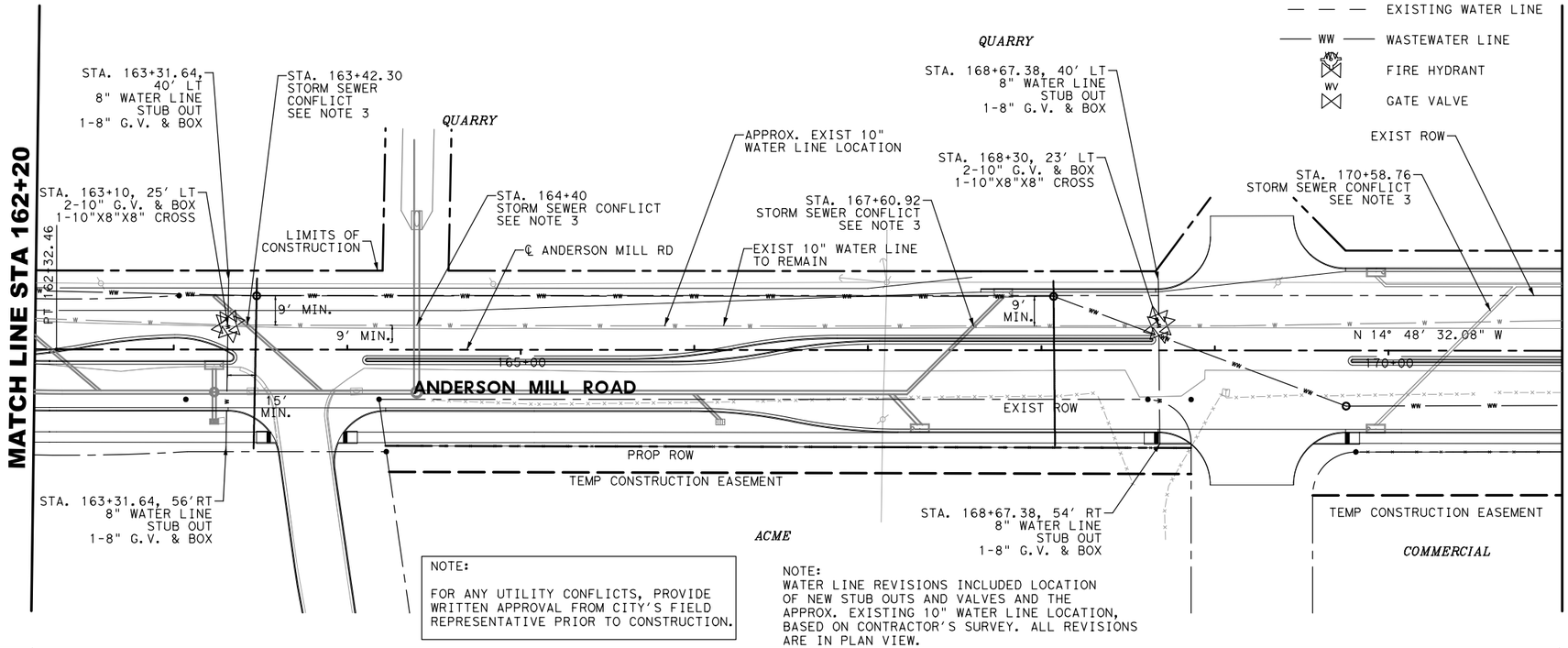

NOTE:

FOR ANY UTILITY CONFLICTS, PROVIDE WRITTEN APPROVAL FROM CITY'S FIELD REPRESENTATIVE PRIOR TO CONSTRUCTION.

NOTE:
WATER LINE REVISIONS INCLUDED LOCATION OF NEW STUB OUTS AND VALVES AND THE APPROX. EXISTING 10" WATER LINE LOCATION, BASED ON CONTRACTOR'S SURVEY. ALL REVISIONS ARE IN PLAN VIEW.

NOTES:

1. CONTRACTOR TO FIELD VERIFY EXISTING UTILITIES AND THEIR LOCATION PRIOR TO CONSTRUCTION.
2. CONTRACTOR TO PROVIDE ALL BENDS, FIXTURES, AND RESTRAINED JOINTS FOR COMPLETE FIRE HYDRANT INSTALLATION.
3. FOR 10" WATER LINE CONFLICT DETAIL, SEE WATER DETAILS.
4. EXISTING WATER LINE VERTICAL & HORIZONTAL LOCATION IS APPROXIMATE. CONTRACTOR TO FIELD VERIFY PRIOR TO CONSTRUCTION.
5. DEPTH OF COVER OF 10" WATER LINE TO BE 48" MIN. REDUCED COVER ONLY ALLOWED WITH WRITTEN APPROVAL FROM THE CITY'S FIELD REPRESENTATIVE.
6. CONTRACTOR TO NOTIFY CITY PUBLIC WORKS DEPARTMENT PRIOR TO RELOCATION OR REMOVAL OF ANY WATER SERVICE, AIR RELEASE, OR ANY VALVE BOX REMOVAL OR INSTALLATION.
7. CONTRACTOR TO PROVIDE ALL BENDS, FIXTURES AND APPURTENANCES FOR COMPLETE AIR RELEASE VALVE INSTALLATION.
8. ALL WATER STUB-OUTS REQUIRE MARKER PIPE. SEE DETAILS.
9. FOR PROPOSED WASTEWATER, SEE WASTEWATER PLANS.
10. A MINIMUM SEPARATION DISTANCE OF 24" REQUIRED AT ALL WASTEWATER & STORM CROSSINGS. CENTER ONE JOINT OF WATER PIPE AT ALL CROSSINGS. ENCASEMENT OF WATER PIPE REQUIRED IN ACCORDANCE WITH THE TEXAS ADMINISTRATIVE CODE - 30TAC,RULE 217.53(7)(C).
11. ALL WATER STUB OUTS SHALL BE AT A MINIMUM 1.00% SLOPE WITH A MINIMUM OF 3′ COVER AT TERMINATION.
12. FOR EXIST. 10" WATER LINE LOCATION, REFERENCE CITY AS-BUILTS (CYPRESS CANYON/LIME CREEK ROAD WATER IMPROVEMENTS)

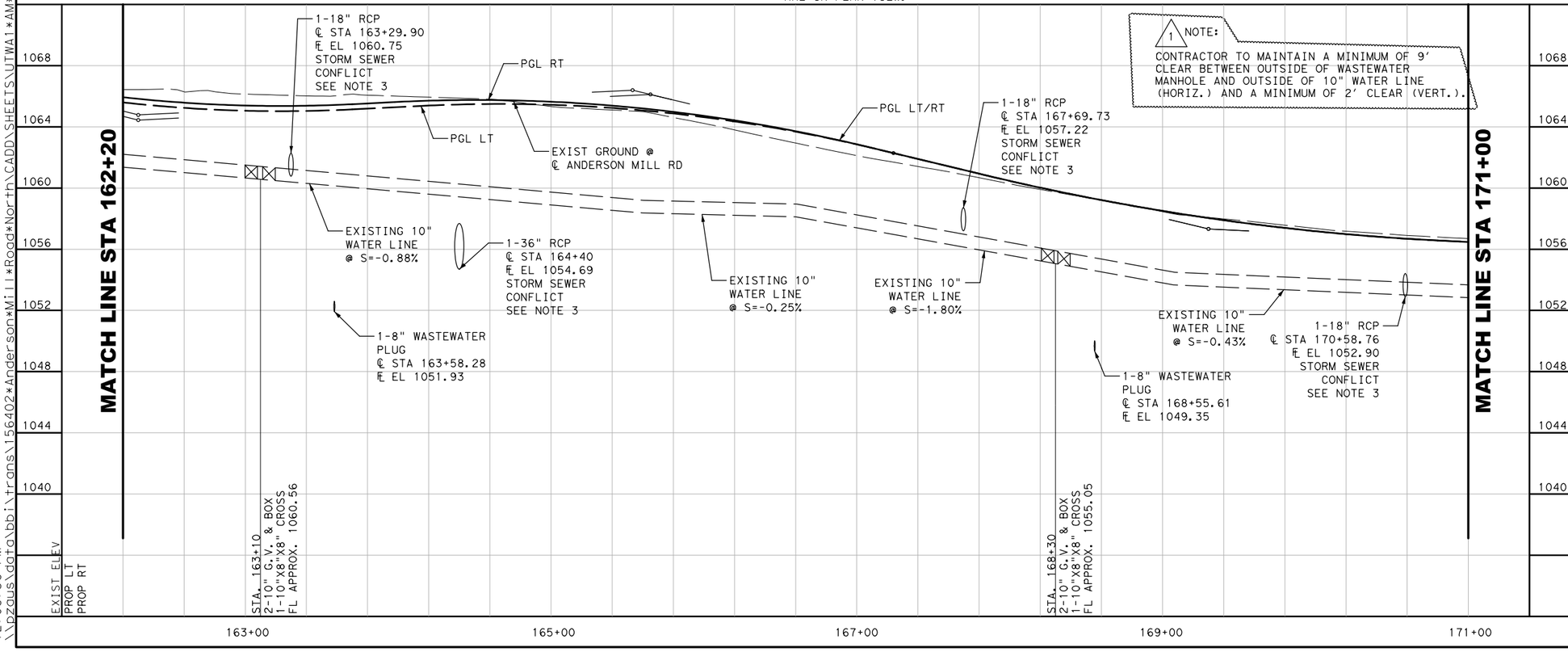

NOTE:
CONTRACTOR TO MAINTAIN A MINIMUM OF 9′ CLEAR BETWEEN OUTSIDE OF WASTEWATER MANHOLE AND OUTSIDE OF 10" WATER LINE (HORIZ.) AND A MINIMUM OF 2′ CLEAR (VERT.).

NUMBER	DATE	REVISION	APPROVED
1	5/31/17	ADJUSTED EXIST WATER LOCATION & NEW STUBOUTS	DRE

STATE OF TEXAS — DENNIS R. ECKER — 119381 — LICENSED — PROFESSIONAL ENGINEER

STATE OF TEXAS — REYNALDO GONZALEZ, JR — 91803 — LICENSED — PROFESSIONAL ENGINEER

10/06/2016

CEDAR PARK

Binkley & Barfield, Inc
consulting engineers
Texas Registration Number F-257

ANDERSON MILL ROAD
GASPAR BEND TO WHITESTONE BLVD
WATER PLANS
STA. 162+20 - STA. 171+00

DESIGN BY: BLJ
DRAWN BY: BLJ
CHECKED BY: DRE
APPROVED BY: RG
PROJECT NO: 156402
DATE: 6/20/2017

SCALE: HORIZ: 1"=40′ VERT: 1"= 4′

SHEET: 8 OF 9

PAGE: UTWA1_AM_08

6/20/2017
1:08:56 PM
\\bgas\data\bb\trans\156402*Anderson*Mill*Road*North\CADD\SHEETS\UTWA1*AM*08.dgn

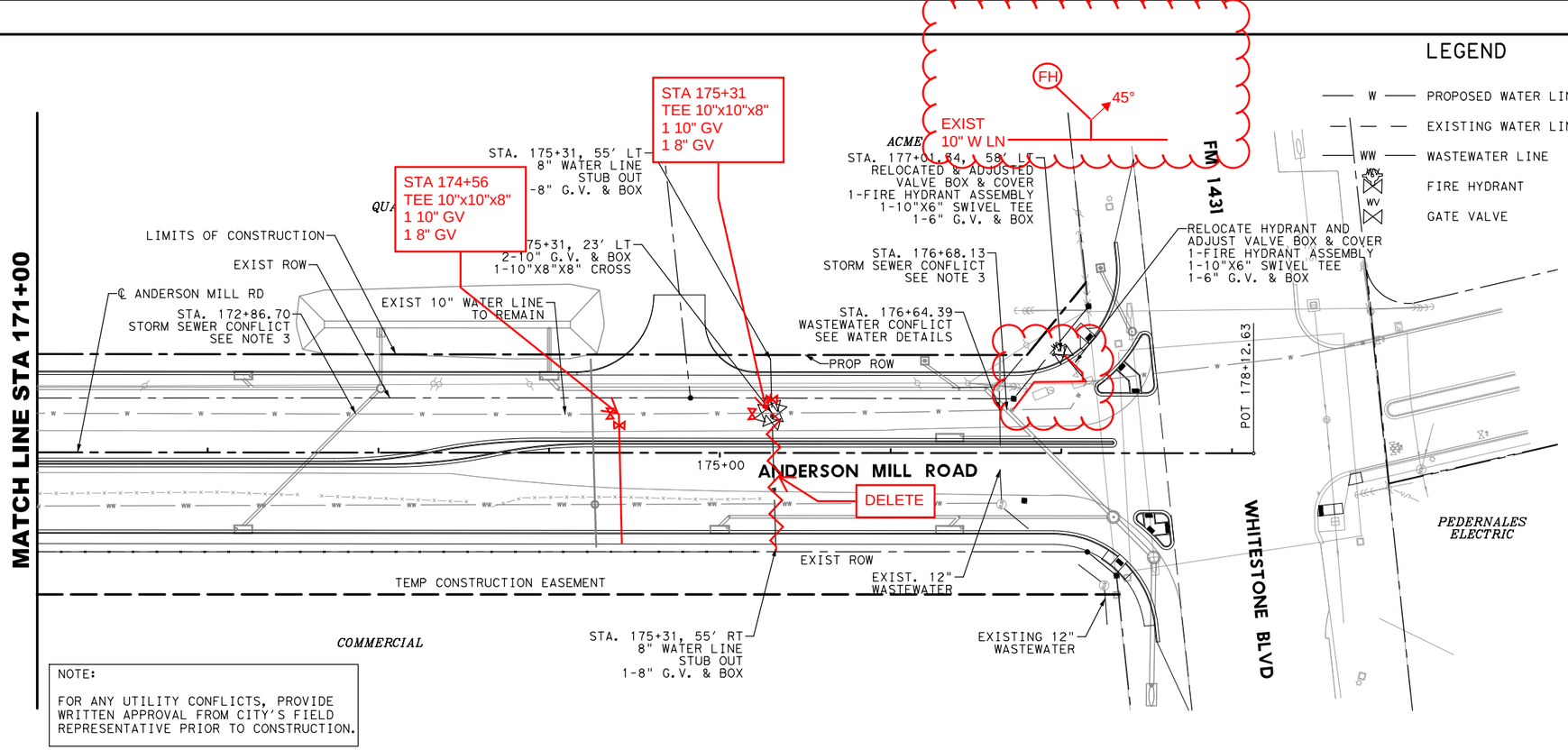

NOTE:

FOR ANY UTILITY CONFLICTS, PROVIDE WRITTEN APPROVAL FROM CITY'S FIELD REPRESENTATIVE PRIOR TO CONSTRUCTION.

LEGEND

- W — PROPOSED WATER LINE
- EXISTING WATER LINE
- WW — WASTEWATER LINE
- FIRE HYDRANT
- WV — GATE VALVE

0' 20' 40' 80'

NOTES:

1. CONTRACTOR TO FIELD VERIFY EXISTING UTILITIES AND THEIR LOCATION PRIOR TO CONSTRUCTION.
2. CONTRACTOR TO PROVIDE ALL BENDS, FIXTURES, AND RESTRAINED JOINTS FOR COMPLETE FIRE HYDRANT INSTALLATION.
3. FOR 10" WATER LINE CONFLICT DETAIL, SEE WATER DETAILS.
4. EXISTING WATER LINE VERTICAL & HORIZONTAL LOCATION IS APPROXIMATE. CONTRACTOR TO FIELD VERIFY PRIOR TO CONSTRUCTION.
5. DEPTH OF COVER OF 10" WATER LINE TO BE 48" MIN. REDUCED COVER ONLY ALLOWED WITH WRITTEN APPROVAL FROM THE CITY'S FIELD REPRESENTATIVE.
6. CONTRACTOR TO NOTIFY CITY PUBLIC WORKS DEPARTMENT PRIOR TO RELOCATION OR REMOVAL OF ANY WATER SERVICE, AIR RELEASE, OR ANY VALVE BOX REMOVAL OR INSTALLATION.
7. CONTRACTOR TO PROVIDE ALL BENDS, FIXTURES AND APPURTENANCES FOR COMPLETE AIR RELEASE VALVE INSTALLATION.
8. ALL WATER STUB-OUTS REQUIRE MARKER PIPE. SEE DETAILS.
9. FOR PROPOSED WASTEWATER, SEE WASTEWATER PLANS.
10. A MINIMUM SEPARATION DISTANCE OF 24" REQUIRED AT ALL WASTEWATER & STORM CROSSINGS. CENTER ONE JOINT OF WATER PIPE AT ALL CROSSINGS. ENCASEMENT OF WATER PIPE REQUIRED IN ACCORDANCE WITH THE TEXAS ADMINISTRATIVE CODE - 30TAC,RULE 217.53(7)(C).
11. ALL WATER STUB OUTS SHALL BE AT A MINIMUM 1.00% SLOPE WITH A MINIMUM OF 3' COVER AT TERMINATION.
12. FOR EXIST. 10" WATER LINE LOCATION, REFERENCE CITY AS-BUILTS (CYPRESS CANYON/LIME CREEK ROAD WATER IMPROVEMENTS)

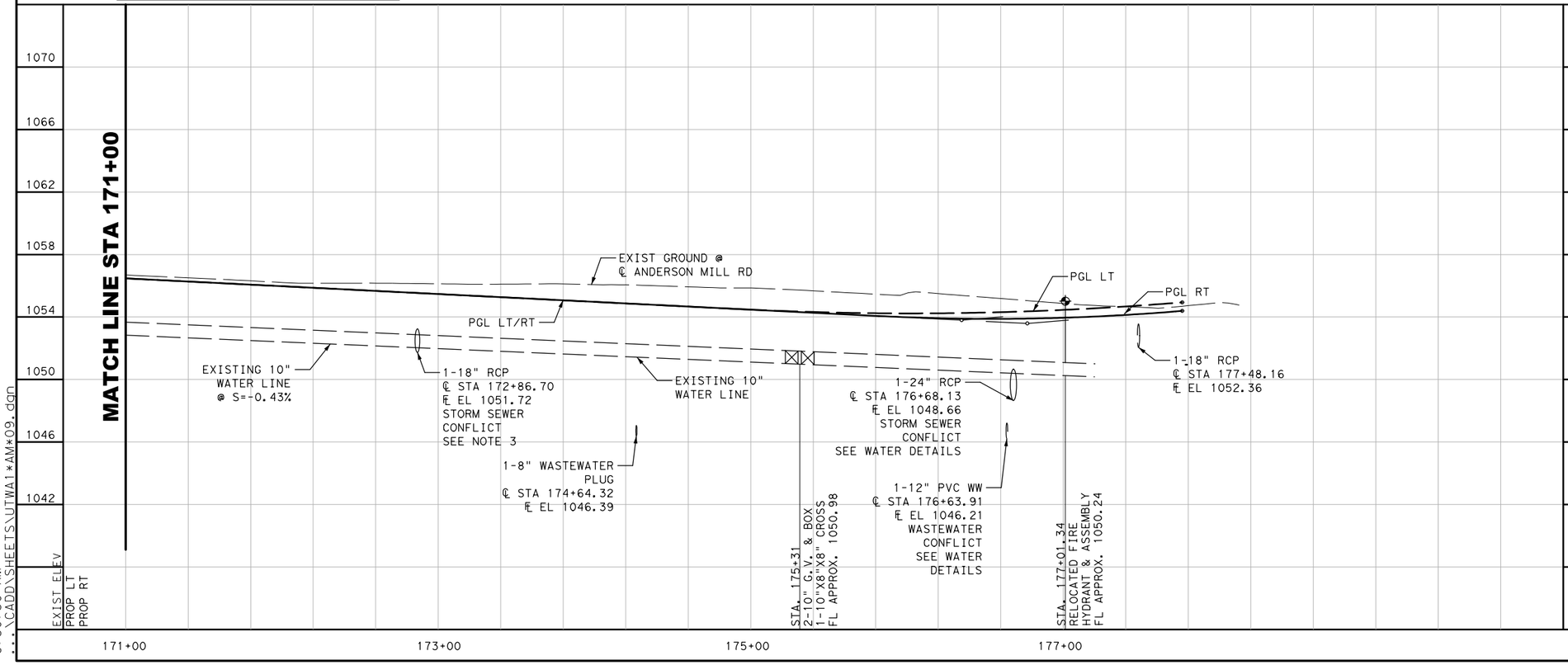

NUMBER	DATE	REVISION	APPROVED

STATE OF TEXAS
REYNALDO GONZALEZ, JR
91803
LICENSED
PROFESSIONAL ENGINEER

10/06/2016

CEDAR PARK

Binkley & Barfield, Inc
consulting engineers
Texas Registration Number F-257

ANDERSON MILL ROAD
GASPAR BEND TO WHITESTONE BLVD
WATER PLANS

STA. 171+00 - END OF PROJECT

DESIGN BY:	BLJ	SCALE:	HORIZ: 1"=40'
DRAWN BY:	BLJ		VERT: 1"= 4'
CHECKED BY:	DRE	SHEET:	9 OF 9
APPROVED BY:	RG		
PROJECT NO:	156402	PAGE:	207
DATE:	10/6/2016		

10/6/2016
8:50:30 AM
...\CADD\SHEETS\UTWA1*AM*09.dgn

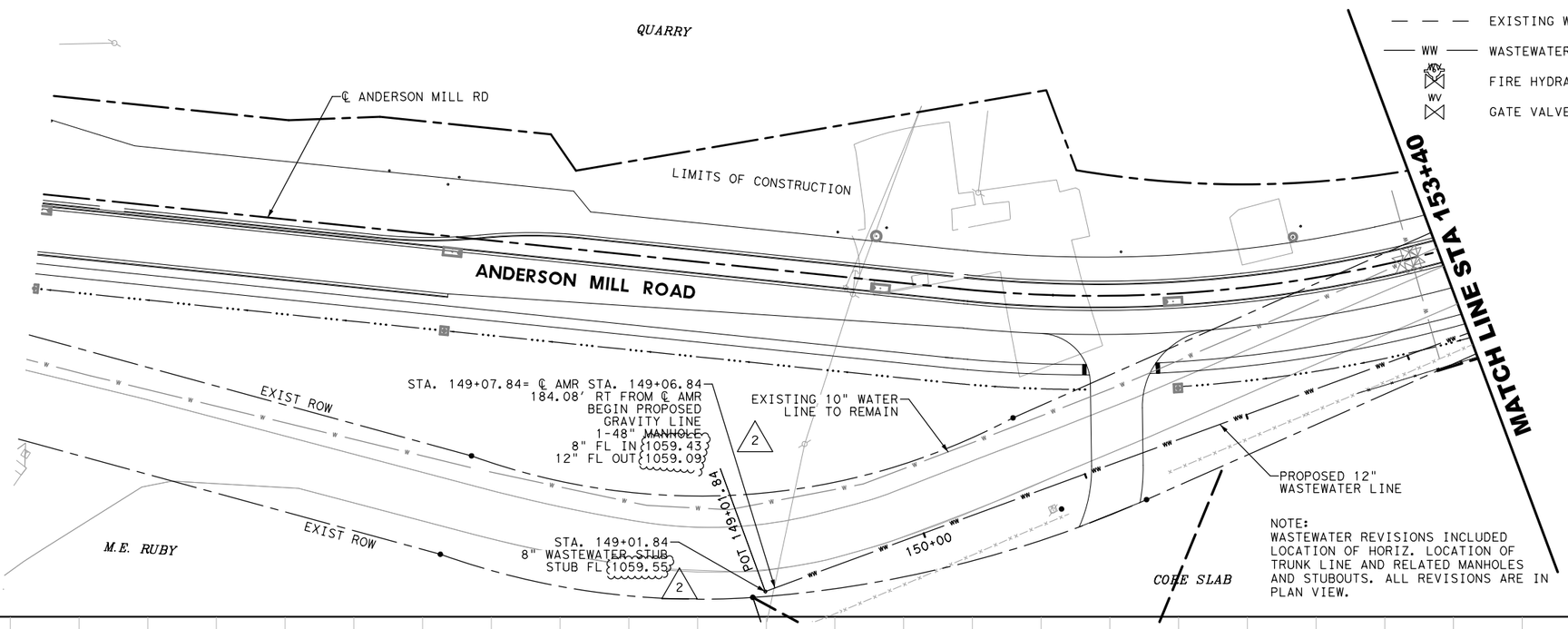

NOTE:
WASTEWATER REVISIONS INCLUDED LOCATION OF HORIZ. LOCATION OF TRUNK LINE AND RELATED MANHOLES AND STUBOUTS. ALL REVISIONS ARE IN PLAN VIEW.

LEGEND

- W — PROPOSED WATER LINE
- EXISTING WATER LINE
- WW — WASTEWATER LINE
- FIRE HYDRANT
- WV — GATE VALVE

0' 20' 40' 80'

NOTES:

1. CONTRACTOR TO FIELD VERIFY EXISTING UTILITIES AND THEIR LOCATION PRIOR TO CONSTRUCTION.
2. ALL WASTEWATER PLUGS REQUIRE MARKER PIPE. SEE DETAILS.
3. EXISTING WATER LINE VERTICAL & HORIZONTAL LOCATION IS APPROXIMATE. CONTRACTOR TO FIELD VERIFY PRIOR TO CONSTRUCTION.
4. A MINIMUM SEPARATION DISTANCE OF 24" REQUIRED AT ALL WATER CROSSINGS. CENTER ONE JOINT OF WASTEWATER PIPE AT ALL CROSSINGS. ENCASEMENT OF WASTEWATER PIPE REQUIRED IN ACCORDANCE WITH THE TEXAS ADMINISTRATIVE CODE - 30 TAC, RULE 217.53(7)(C).
5. ALL WASTEWATER STUB OUTS SHALL BE AT A MINIMUM 2.00% SLOPE.

1 NOTE:
CONTRACTOR TO MAINTAIN A MINIMUM OF 9' CLEAR BETWEEN OUTSIDE OF WASTEWATER MANHOLE AND OUTSIDE OF 10" WATER LINE (HORIZ.) AND A MINIMUM OF 2' CLEAR (VERT.).

NOTE:
FOR ANY UTILITY CONFLICTS, PROVIDE WRITTEN APPROVAL FROM CITY'S FIELD REPRESENTATIVE PRIOR TO CONSTRUCTION.

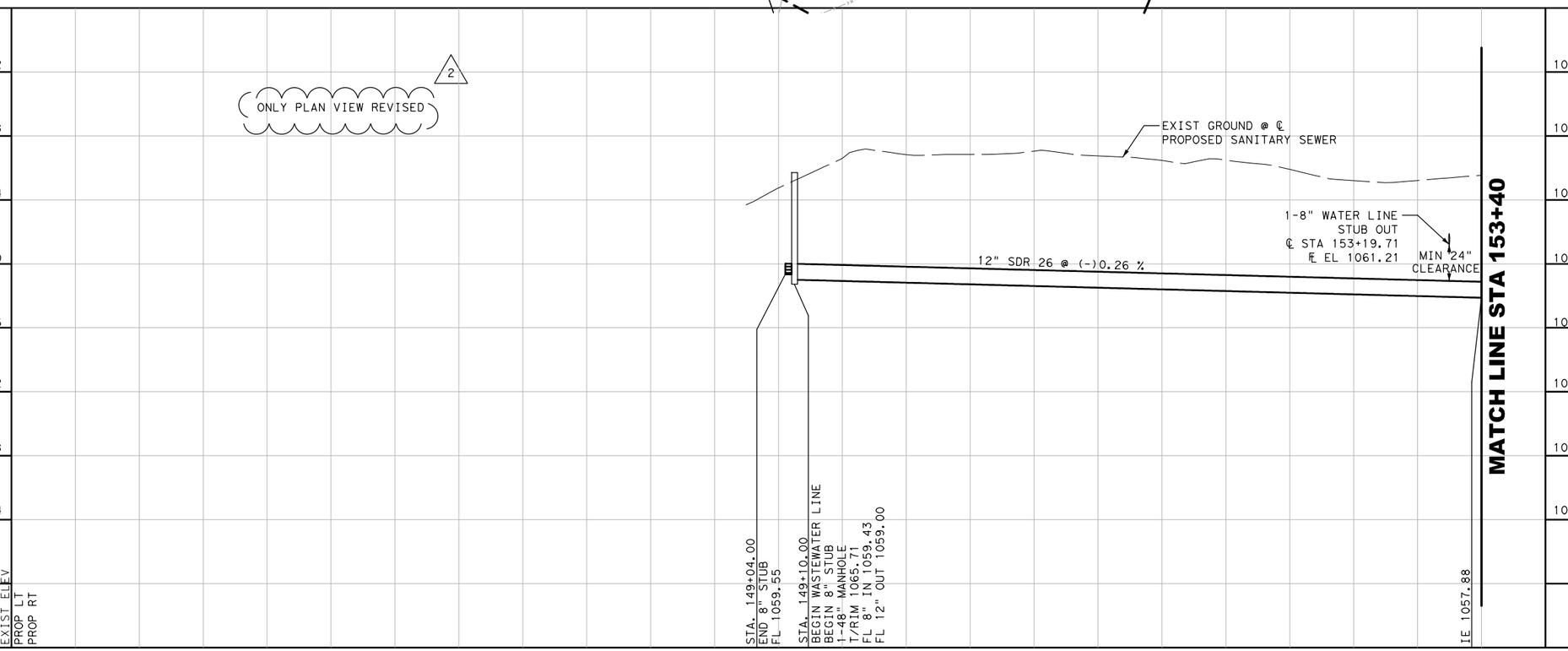

NUMBER	DATE	REVISION	APPROVED
1	5/31/17	ADJUSTED WASTEWATER LOCATION	DRE
2	6/19/17	REVISED WASTEWATER LOCATION	DRE

STATE OF TEXAS — DENNIS R. ECKER — 119381 — LICENSED PROFESSIONAL ENGINEER

STATE OF TEXAS — REYNALDO GONZALEZ, JR — 91803 — LICENSED PROFESSIONAL ENGINEER

10/06/2016

CEDAR PARK

Binkley & Barfield, Inc
consulting engineers
Texas Registration Number F-257

ANDERSON MILL ROAD
GASPAR BEND TO WHITESTONE BLVD
WASTEWATER PLANS

BEGIN PROJECT - STA. 153+40

1 OF 2

DESIGN BY: BLJ
DRAWN BY: BLJ
CHECKED BY: DRE
APPROVED BY: RG
PROJECT NO: 156402
DATE: 6/20/2017

SCALE: HORIZ: 1"=40' VERT: 1"= 4'

SHEET: 1 OF 4

PAGE: UTWW1_AM_01

6/20/2017
12:09:20 PM
\\bzaus\data\bbi\trans\156402*Anderson*Mill*Road*North\CADD\SHEETS\UTWW1*AM*01.dgn

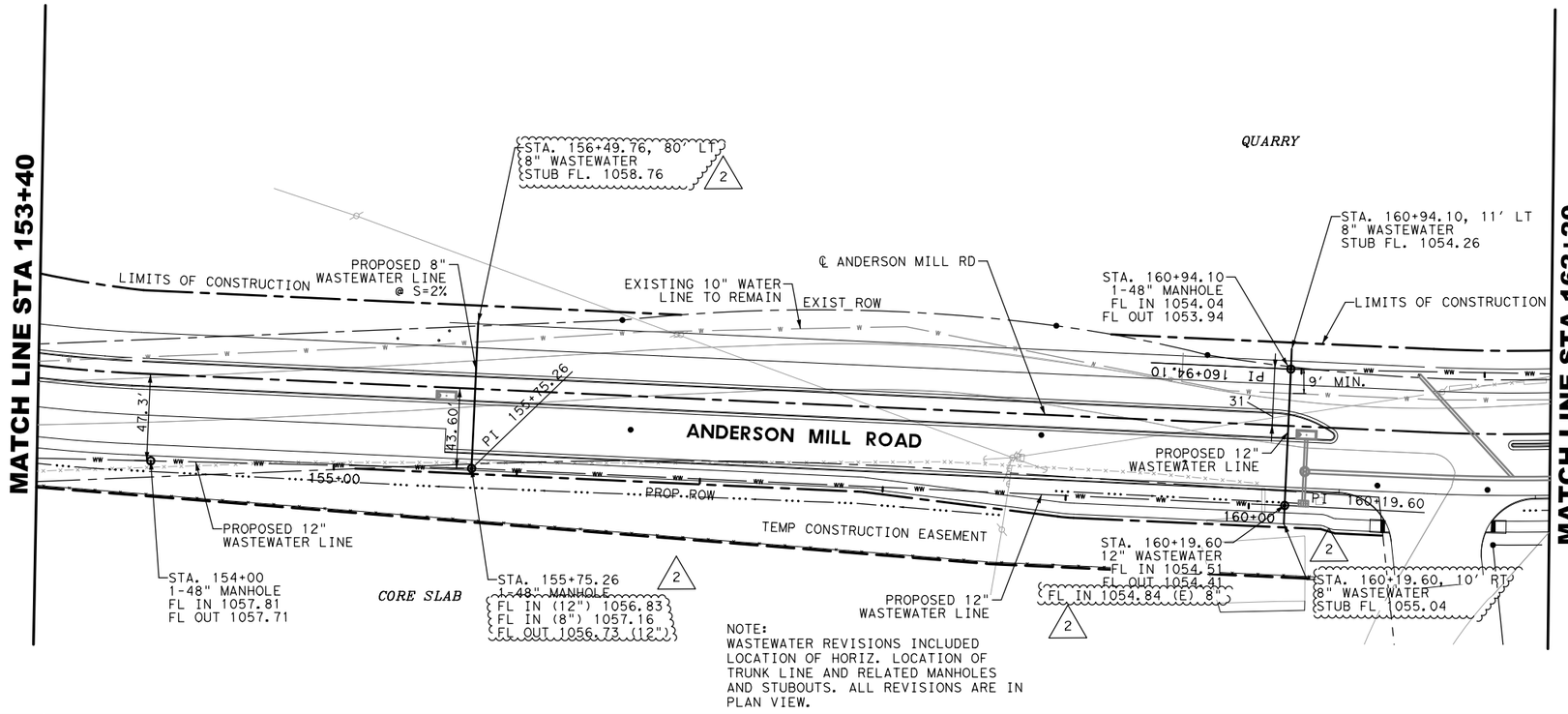

NOTE:
WASTEWATER REVISIONS INCLUDED LOCATION OF HORIZ. LOCATION OF TRUNK LINE AND RELATED MANHOLES AND STUBOUTS. ALL REVISIONS ARE IN PLAN VIEW.

LEGEND

- W — PROPOSED WATER LINE
- EXISTING WATER LINE
- WW — WASTEWATER LINE
- FIRE HYDRANT
- GATE VALVE

0' 20' 40' 80'

NOTES:

1. CONTRACTOR TO FIELD VERIFY EXISTING UTILITIES AND THEIR LOCATION PRIOR TO CONSTRUCTION.
2. ALL WASTEWATER PLUGS REQUIRE MARKER PIPE. SEE DETAILS.
3. EXISTING WATER LINE VERTICAL & HORIZONTAL LOCATION IS APPROXIMATE. CONTRACTOR TO FIELD VERIFY PRIOR TO CONSTRUCTION.
4. A MINIMUM SEPARATION DISTANCE OF 24" REQUIRED AT ALL WATER CROSSINGS. CENTER ONE JOINT OF WASTEWATER PIPE AT ALL CROSSINGS. ENCASEMENT OF WASTEWATER PIPE REQUIRED IN ACCORDANCE WITH THE TEXAS ADMINISTRATIVE CODE - 30 TAC, RULE 217.53(7)(C).
5. ALL WASTEWATER STUB OUTS SHALL BE AT A MINIMUM 2.00% SLOPE.

1 NOTE:
CONTRACTOR TO MAINTAIN A MINIMUM OF 9' CLEAR BETWEEN OUTSIDE OF WASTEWATER MANHOLE AND OUTSIDE OF 10" WATER LINE (HORIZ.) AND A MINIMUM OF 2' CLEAR (VERT.).

NOTE:
FOR ANY UTILITY CONFLICTS, PROVIDE WRITTEN APPROVAL FROM CITY'S FIELD REPRESENTATIVE PRIOR TO CONSTRUCTION.

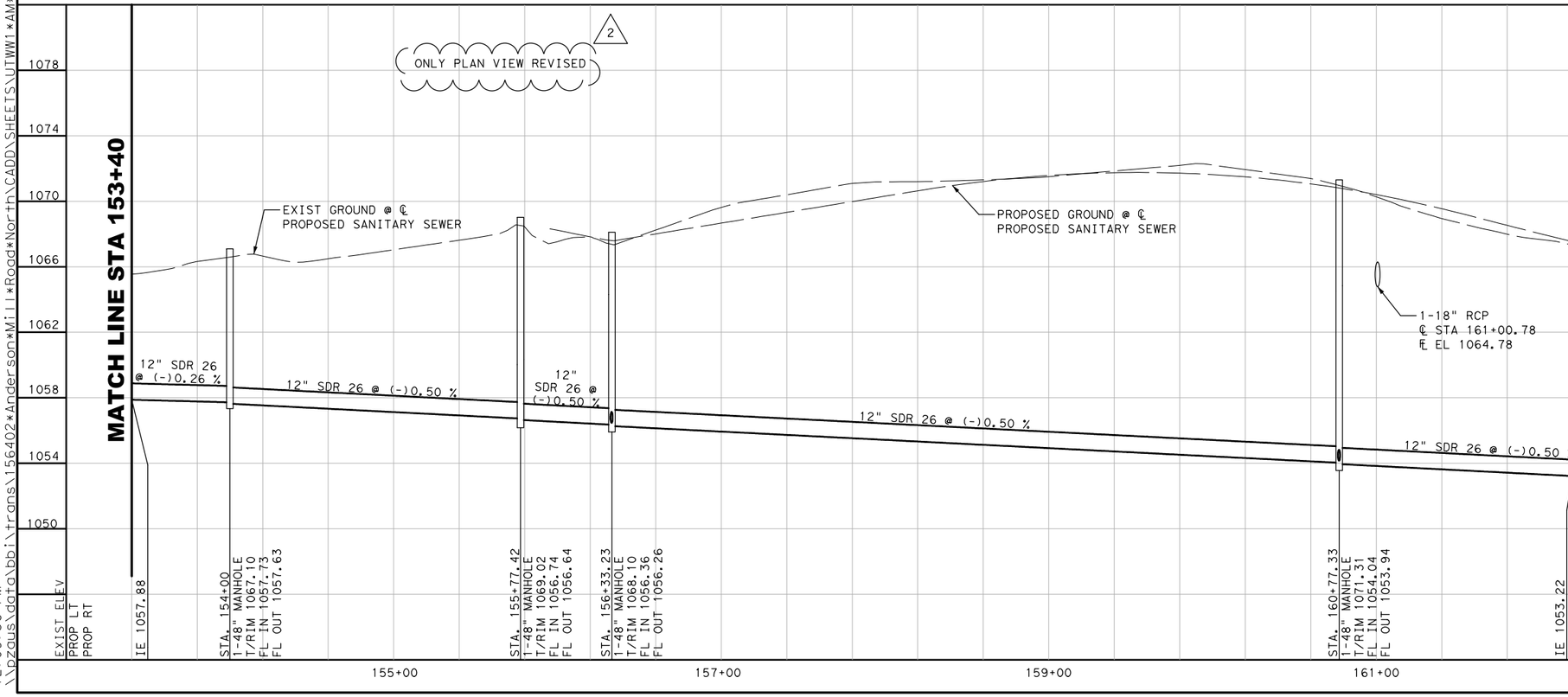

NUMBER	DATE	REVISION	APPROVED
1	5/31/17	ADJUSTED WASTEWATER LOCATION	DRE
2	6/19/17	REVISED WASTEWATER LOCATION	DRE

STATE OF TEXAS
DENNIS R. ECKER
119381
LICENSED
PROFESSIONAL ENGINEER

STATE OF TEXAS
REYNALDO GONZALEZ, JR
91803
LICENSED
PROFESSIONAL ENGINEER

10/06/2016

CEDAR PARK

Binkley & Barfield, Inc
consulting engineers
Texas Registration Number F-257

ANDERSON MILL ROAD
GASPAR BEND TO WHITESTONE BLVD
WASTEWATER PLANS
STA. 153+40 - STA. 162+20

2 OF 2

DESIGN BY:	BLJ
DRAWN BY:	BLJ
CHECKED BY:	DRE
APPROVED BY:	RG
PROJECT NO:	156402
DATE:	6/20/2017

SCALE: HORIZ: 1"=40' VERT: 1"= 4'

SHEET: 2 OF 4

PAGE: UTWW1_AM_02

6/20/2017
12:09:36 PM
\\pzaus\data\bb\trans\156402*Anderson*Mill*Road*North\CADD\SHEETS\UTWW1*AM*02.dgn

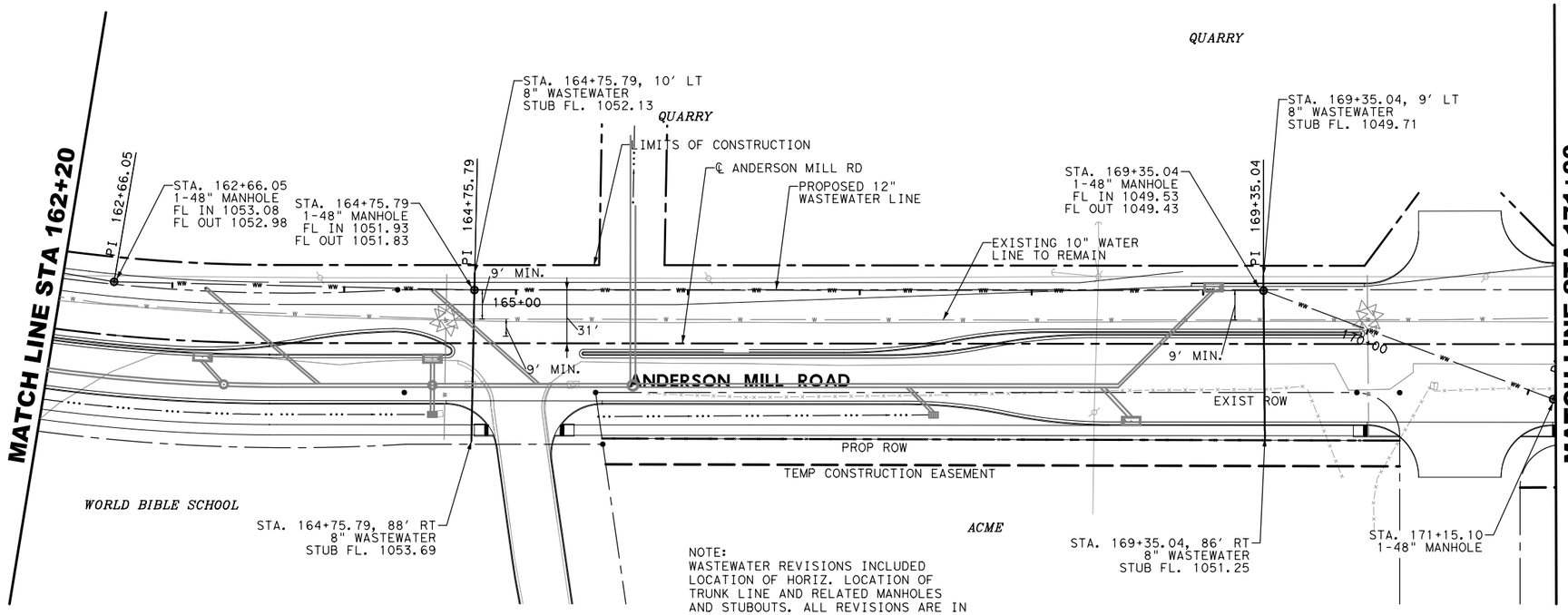

NOTE:
WASTEWATER REVISIONS INCLUDED LOCATION OF HORIZ. LOCATION OF TRUNK LINE AND RELATED MANHOLES AND STUBOUTS. ALL REVISIONS ARE IN PLAN VIEW.

LEGEND

- W — PROPOSED WATER LINE
- EXISTING WATER LINE
- WW — WASTEWATER LINE
- FIRE HYDRANT
- WV — GATE VALVE

0' 20' 40' 80'

NOTES:

1. CONTRACTOR TO FIELD VERIFY EXISTING UTILITIES AND THEIR LOCATION PRIOR TO CONSTRUCTION.
2. ALL WASTEWATER PLUGS REQUIRE MARKER PIPE. SEE DETAILS.
3. EXISTING WATER LINE VERTICAL & HORIZONTAL LOCATION IS APPROXIMATE. CONTRACTOR TO FIELD VERIFY PRIOR TO CONSTRUCTION.
4. A MINIMUM SEPARATION DISTANCE OF 24" REQUIRED AT ALL WATER CROSSINGS. CENTER ONE JOINT OF WASTEWATER PIPE AT ALL CROSSINGS. ENCASEMENT OF WASTEWATER PIPE REQUIRED IN ACCORDANCE WITH THE TEXAS ADMINISTRATIVE CODE - 30 TAC, RULE 217.53(7)(C).
5. ALL WASTEWATER STUB OUTS SHALL BE AT A MINIMUM 2.00% SLOPE.

1 NOTE:
CONTRACTOR TO MAINTAIN A MINIMUM OF 9' CLEAR BETWEEN OUTSIDE OF WASTEWATER MANHOLE AND OUTSIDE OF 10" WATER LINE (HORIZ.) AND A MINIMUM OF 2' CLEAR (VERT.).

NOTE:
FOR ANY UTILITY CONFLICTS, PROVIDE WRITTEN APPROVAL FROM CITY'S FIELD REPRESENTATIVE PRIOR TO CONSTRUCTION.

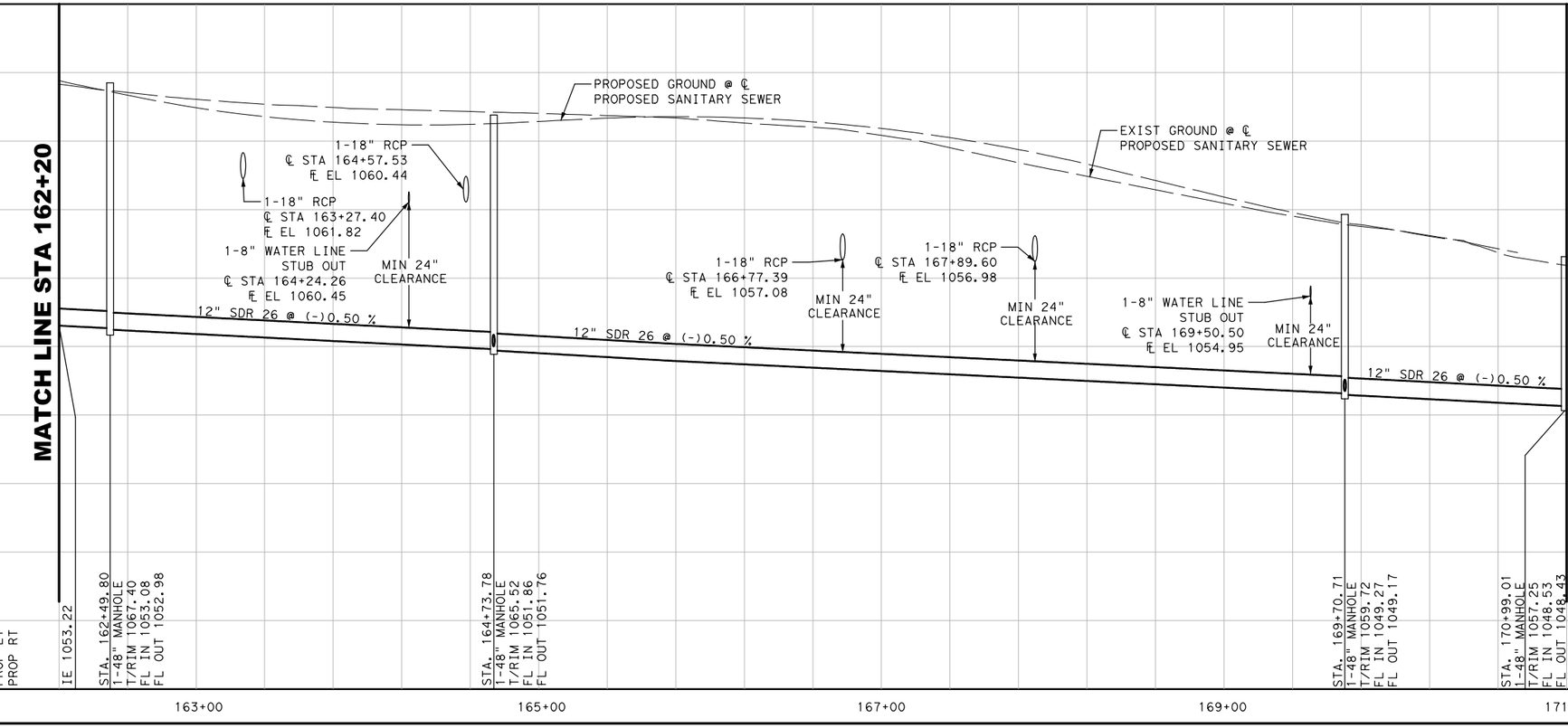

NUMBER	DATE	REVISION	APPROVED
1	5/31/17	ADJUSTED WASTEWATER LOCATION	DRE

STATE OF TEXAS — DENNIS R. ECKER — 119381 — LICENSED PROFESSIONAL ENGINEER

STATE OF TEXAS — REYNALDO GONZALEZ, JR — 91803 — LICENSED PROFESSIONAL ENGINEER

10/06/2016

CEDAR PARK

Binkley & Barfield, Inc
consulting engineers
Texas Registration Number F-257

ANDERSON MILL ROAD
GASPAR BEND TO WHITESTONE BLVD
WASTEWATER PLANS
STA. 162+20 - STA. 171+00

DESIGN BY:	BLJ
DRAWN BY:	BLJ
CHECKED BY:	DRE
APPROVED BY:	RG
PROJECT NO:	156402
DATE:	6/20/2017

SCALE: HORIZ: 1"=40' VERT: 1"= 4'

SHEET: 3 OF 4

PAGE: UTWW1_AM_03

6/20/2017
12:09:56 PM
\\bgaus\data\bb\trans\156402*Anderson*Mill*Road*North\CADD\SHEETS\UTWW1*AM*03.dgn

NOTE:

FOR ANY UTILITY CONFLICTS, PROVIDE WRITTEN APPROVAL FROM CITY'S FIELD REPRESENTATIVE PRIOR TO CONSTRUCTION.

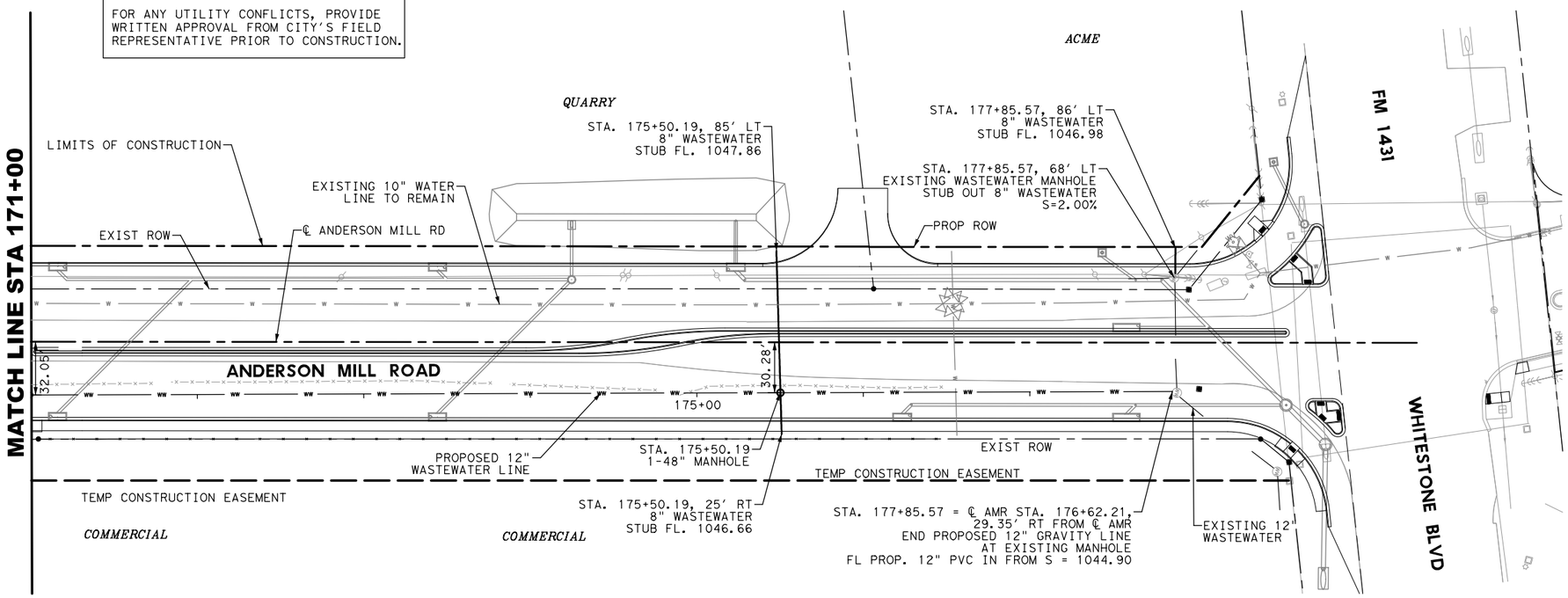

LEGEND

0' 20' 40' 80'

- W — PROPOSED WATER LINE
- EXISTING WATER LINE
- WW — WASTEWATER LINE
- FIRE HYDRANT
- WV — GATE VALVE

NOTES:

1. CONTRACTOR TO FIELD VERIFY EXISTING UTILITIES AND THEIR LOCATION PRIOR TO CONSTRUCTION.
2. ALL WASTEWATER PLUGS REQUIRE MARKER PIPE. SEE DETAILS.
3. EXISTING WATER LINE VERTICAL & HORIZONTAL LOCATION IS APPROXIMATE. CONTRACTOR TO FIELD VERIFY PRIOR TO CONSTRUCTION.
4. A MINIMUM SEPARATION DISTANCE OF 24" REQUIRED AT ALL WATER CROSSINGS. CENTER ONE JOINT OF WASTEWATER PIPE AT ALL CROSSINGS. ENCASEMENT OF WASTEWATER PIPE REQUIRED IN ACCORDANCE WITH THE TEXAS ADMINISTRATIVE CODE - 30 TAC, RULE 217.53(7)(C).
5. ALL WASTEWATER STUB OUTS SHALL BE AT A MINIMUM 2.00% SLOPE.

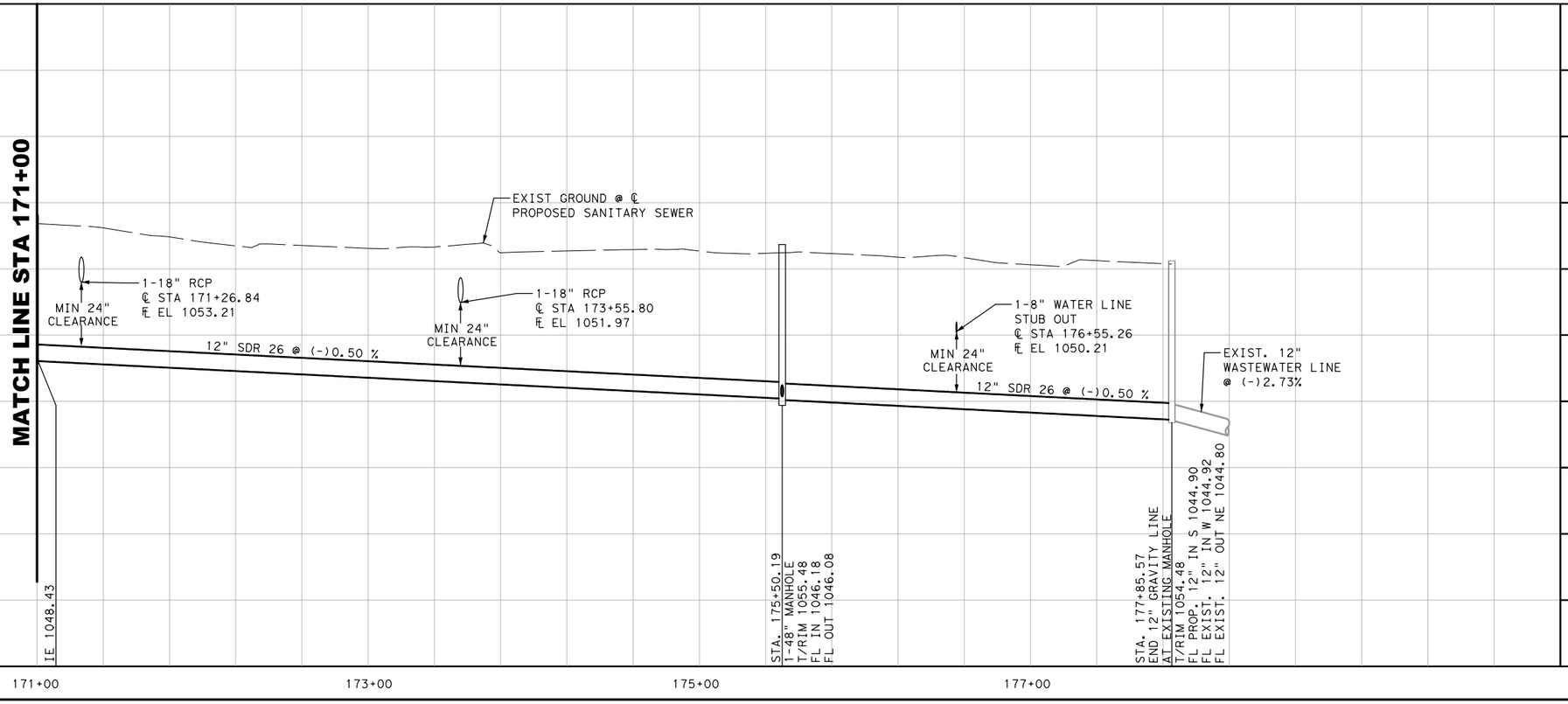

NUMBER	DATE	REVISION	APPROVED

STATE OF TEXAS
REYNALDO GONZALEZ, JR
91803
LICENSED
PROFESSIONAL ENGINEER

10/06/2016

CEDAR PARK

Binkley & Barfield, Inc
consulting engineers
Texas Registration Number F-257

ANDERSON MILL ROAD
GASPAR BEND TO WHITESTONE BLVD
WASTEWATER PLANS
STA. 171+00 - END OF PROJECT

DESIGN BY:	BLJ	SCALE:	HORIZ: 1"=40'
DRAWN BY:	BLJ		VERT: 1"= 4'
CHECKED BY:	DRE	SHEET:	4 OF 4
APPROVED BY:	RG		
PROJECT NO:	156402	PAGE:	211
DATE:	10/6/2016		

10/6/2016
8:50:45 AM
...\CADD\SHEETS\UTWW1*AM*04.dgn

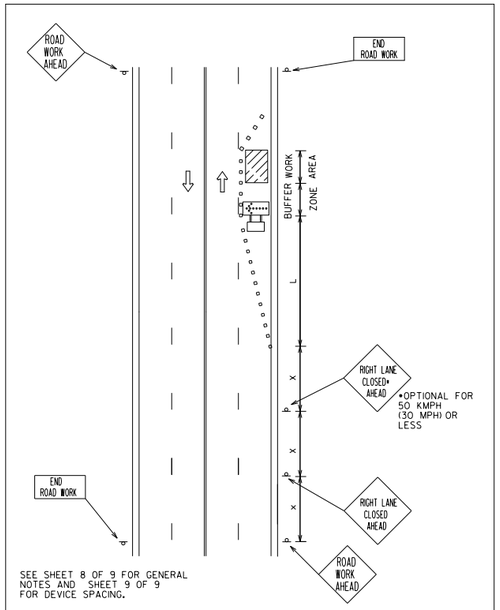

SEE SHEET 8 OF 9 FOR GENERAL NOTES AND SHEET 9 OF 9 FOR DEVICE SPACING.

CITY OF AUSTIN DEPARTMENT OF PUBLIC WORKS	ARTERIAL ONE LANE CLOSURE	
RECORD COPY SIGNED BY KERI JUAREZ 01/04/11 ADOPTED	THE ARCHITECT/ENGINEER ASSUMES RESPONSIBILITY FOR APPROPRIATE USE OF THIS STANDARD.	STANDARD NO. 804S-1 1 OF 9

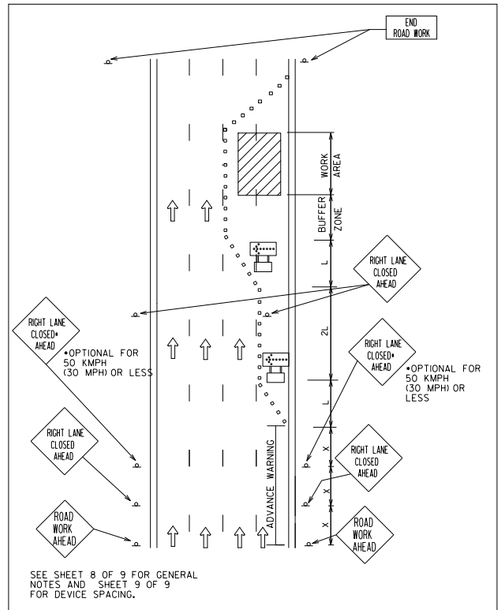

SEE SHEET 8 OF 9 FOR GENERAL NOTES AND SHEET 9 OF 9 FOR DEVICE SPACING.

CITY OF AUSTIN DEPARTMENT OF PUBLIC WORKS	ONE WAY ARTERIAL TWO-LANE CLOSURE	
RECORD COPY SIGNED BY KERI JUAREZ 01/04/11 ADOPTED	THE ARCHITECT/ENGINEER ASSUMES RESPONSIBILITY FOR APPROPRIATE USE OF THIS STANDARD.	STANDARD NO. 804S-1 2 OF 9

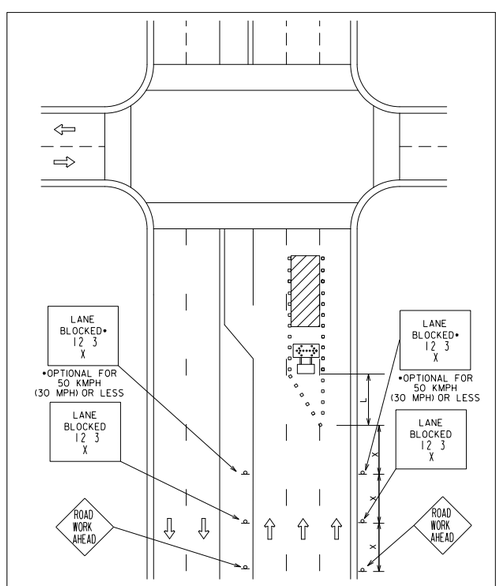

SEE SHEET 8 OF 9 FOR GENERAL NOTES AND SHEET 9 OF 9 FOR DEVICE SPACING.

CITY OF AUSTIN DEPARTMENT OF PUBLIC WORKS	TWO WAY, DIVIDED ARTERIAL ONE LANE CLOSURE	
RECORD COPY SIGNED BY KERI JUAREZ 01/04/11 ADOPTED	THE ARCHITECT/ENGINEER ASSUMES RESPONSIBILITY FOR APPROPRIATE USE OF THIS STANDARD.	STANDARD NO. 804S-1 3 OF 9

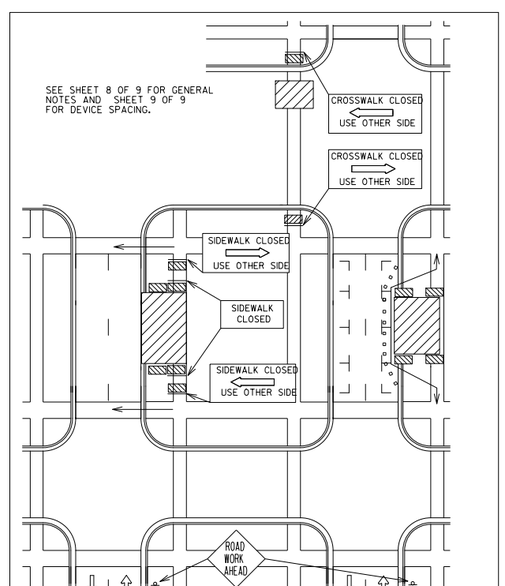

SEE SHEET 8 OF 9 FOR GENERAL NOTES AND SHEET 9 OF 9 FOR DEVICE SPACING.

CITY OF AUSTIN DEPARTMENT OF PUBLIC WORKS	BYPASS WALKWAY, SIDEWALK AND CROSSWALK CLOSURES	
RECORD COPY SIGNED BY KERI JUAREZ 01/04/11 ADOPTED	THE ARCHITECT/ENGINEER ASSUMES RESPONSIBILITY FOR APPROPRIATE USE OF THIS STANDARD.	STANDARD NO. 804S-1 4 OF 9

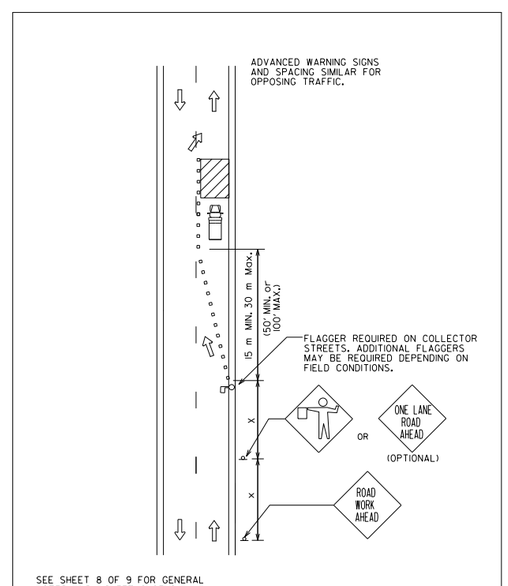

SEE SHEET 8 OF 9 FOR GENERAL NOTES AND SHEET 9 OF 9 FOR DEVICE SPACING.

CITY OF AUSTIN DEPARTMENT OF PUBLIC WORKS	COLLECTOR/RESIDENTIAL LANE CLOSURES	
RECORD COPY SIGNED BY KERI JUAREZ 01/04/11 ADOPTED	THE ARCHITECT/ENGINEER ASSUMES RESPONSIBILITY FOR APPROPRIATE USE OF THIS STANDARD.	STANDARD NO. 804S-1 5 OF 9

NUMBER	DATE	REVISION	APPROVED

CEDAR PARK

Binkley & Barfield, Inc
consulting engineers
Texas Registration Number F-257

ANDERSON MILL ROAD
GASPAR BEND TO WHITESTONE BLVD
STANDARD DETAILS TRAFFIC CONTROL

DESIGN BY: GCC DRAWN BY: DSH CHECKED BY: DRE APPROVED BY: BDR PROJECT NO: 156402 DATE: 10/6/2016	SCALE: N/A SHEET: PAGE: 212	

10/6/2016
8:50:46 AM
...\CADD\SHEETS\TCSD1*AM*01.dgn

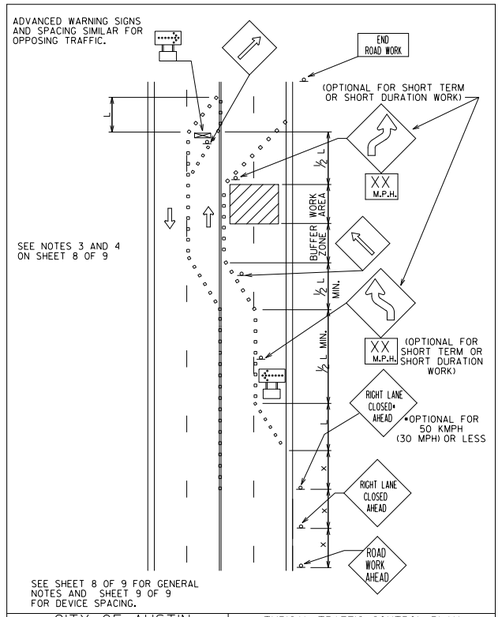

CITY OF AUSTIN DEPARTMENT OF PUBLIC WORKS	TYPICAL TRAFFIC CONTROL PLAN FOR SHIFTING TRAFFIC	
RECORD COPY SIGNED BY KERI JUAREZ 01/04/11 ADOPTED	THE ARCHITECT/ENGINEER ASSUMES RESPONSIBILITY FOR APPROPRIATE USE OF THIS STANDARD.	STANDARD NO. 804S-1 6 OF 9

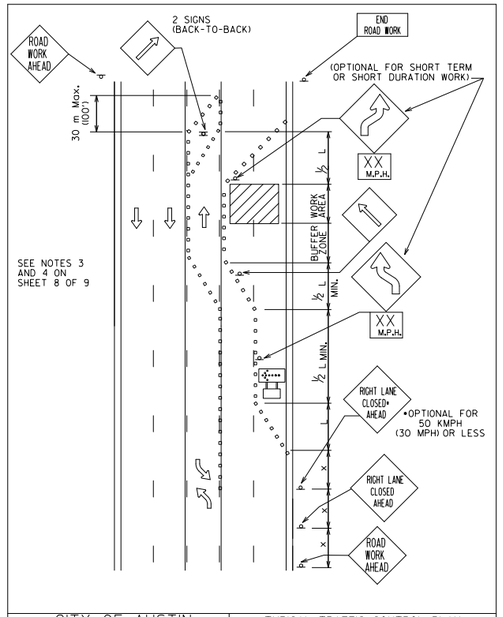

CITY OF AUSTIN DEPARTMENT OF PUBLIC WORKS	TYPICAL TRAFFIC CONTROL PLAN FOR SHIFTING TRAFFIC	
RECORD COPY SIGNED BY KERI JUAREZ 01/04/11 ADOPTED	THE ARCHITECT/ENGINEER ASSUMES RESPONSIBILITY FOR APPROPRIATE USE OF THIS STANDARD.	STANDARD NO. 804S-1 7 OF 9

1. ALL SETUPS SHALL BE IN ACCORDANCE WITH THE CURRENT ADDITION OF THE TEXAS MANUAL ON UNIFORM TRAFFIC CONTROL DEVICES AND THE CITY OF AUSTIN TRANSPORTATION CRITERIA MANUAL.
2. TO DETERMINE APPROPRIATE DEVICES AND SIGN SIZES TO BE USED, REFER TO STANDARD 804S-5, SHEETS 5, 6 AND 7 OF 11.
3. FOR INTERMEDIATE-TERM SITUATIONS, WHEN IT IS NOT FEASIBLE TO REMOVE AND RESTORE PAVEMENT MARKINGS, THE CHANNELIZATION MUST BE MADE DOMINANT BY USING A VERY CLOSE DEVICE SPACING. THIS IS ESPECIALLY IMPORTANT IN LOCATIONS OF CONFLICTING INFORMATION, SUCH AS WHERE TRAFFIC IS DIRECTED OVER A DOUBLE YELLOW CENTERLINE. IN SUCH LOCATIONS, A MAXIMUM CHANNELIZING DEVICE SPACING OF 3 m (10') IS REQUIRED.
4. FOR LONG TERM STATIONARY WORK, ALL CONFLICTING PAVEMENT MARKINGS MUST BE REMOVED AND CENTERLINE STRIPING PROVIDED WHERE TWO WAY TRAFFIC IS IN ADJACENT LANES.
5. FOR TEMPORARY PAVEMENT MARKING REQUIREMENTS SEE STANDARD 804S-3.
6. FOR ONE-WAY AND MULTI-LANE ROADWAYS THE "LANE BLOCKED" SIGN MAY BE USED IN LIEU OF THE "LANE CLOSED AHEAD" SIGN. THE NUMBER OF DIGITS ON THE SIGN SHALL NOT BE GREATER THAN THE NUMBER OF LANES PRESENT ON THE ROADWAY. THE "X" SHALL BE PLACED UNDER THE NUMBER OF LANE(S) BLOCKED.
7. FOR FLAGGING OPERATION REQUIREMENTS SEE STANDARD 804S-2.
8. CONTRACTOR SHALL PROVIDE SIDEWALK CLOSURES, CROSSWALK CLOSURES OR WALKWAY BYPASS WHEREVER PEDESTRIAN MOVEMENTS ARE AFFECTED BY CONSTRUCTION ACTIVITIES. ALL SIDEWALKS AND CROSSWALKS SHALL BE ACCESSIBLE WHEN CONTRACTOR IS NOT WORKING UNLESS APPROVED BY THE TRANSPORTATION DIVISION.
9. FOR EXCAVATION PROTECTION AND SAFETY FENCE REQUIREMENTS SEE STANDARD 804S-4.
10. THE USE OF ARROW DISPLAYS ARE REQUIRED ON ALL LANE CLOSURES. THE CONTRACTOR SHALL PROVIDE ONE (1) STAND-BY UNIT IN GOOD WORKING CONDITION AT THE JOB SITE, READY FOR USE IF THE OPERATION REQUIRES 24-HOUR A DAY LANE CLOSURE SET-UPS.

CITY OF AUSTIN DEPARTMENT OF PUBLIC WORKS	GENERAL NOTES	
RECORD COPY SIGNED BY KERI JUAREZ 01/04/11 ADOPTED	THE ARCHITECT/ENGINEER ASSUMES RESPONSIBILITY FOR APPROPRIATE USE OF THIS STANDARD.	STANDARD NO. 804S-1 8 OF 9

Typical Transition Lengths and Suggested Maximum Spacing of Devices

Speed KMPH	Posted Speed MPH	Formula	Minimum Desirable Taper Lengths (L) Meters (Feet) 3.0(10) Offset Meters (feet)	3.3(11) Offset Meters (feet)	3.6(12) Offset Meters (feet)	Suggested Max. Device Spacing On a taper Meters (feet)	On a tangent Meters (feet)	Suggested Sign Spacing Meters (Feet) "X" Dimension
50	30	L=WS²/60	45 (150)	50 (165)	55 (180)	9 (30)	15-20 (60-75)	40 (120)
55	35		65 (205)	70 (225)	75 (245)	10 (35)	25-25 (70-90)	50 (160)
65	40		80 (265)	90 (295)	100 (320)	12 (40)	25-30 (80-100)	75 (240)
70	45	L=WS	135 (450)	150 (495)	165 (540)	13 (45)	25-30 (90-110)	100 (320)
80	50		150 (500)	165 (550)	180 (600)	15 (50)	30-35 (100-125)	120 (400)
90	55		165 (550)	185 (605)	200 (660)	16 (55)	35-40 (110-140)	150 (500)
95	60		180 (600)	200 (660)	220 (720)	18 (60)	40-45 (120-150)	180 (600)
105	65		195 (650)	215 (715)	235 (780)	19 (65)	40-50 (130-165)	210 (700)
115	70		215 (700)	235 (770)	255 (840)	21 (70)	45-55 (140-175)	240 (800)

LEGEND
- Channelizing devices
- Trailer mounted flashing arrow board
- Flagger

CITY OF AUSTIN DEPARTMENT OF PUBLIC WORKS	DEVICE SPACING	
RECORD COPY SIGNED BY KERI JUAREZ 01/04/11 ADOPTED	THE ARCHITECT/ENGINEER ASSUMES RESPONSIBILITY FOR APPROPRIATE USE OF THIS STANDARD.	STANDARD NO. 804S-1 9 OF 9

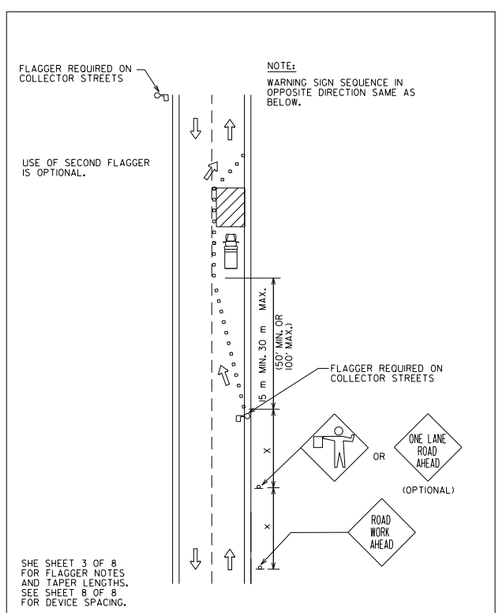

CITY OF AUSTIN DEPARTMENT OF PUBLIC WORKS	COLLECTOR / RESIDENTIAL STREET FLAGGING OPERATIONS	
RECORD COPY SIGNED BY BILL GARDNER 03/13/06 ADOPTED	THE ARCHITECT/ENGINEER ASSUMES RESPONSIBILITY FOR APPROPRIATE USE OF THIS STANDARD.	STANDARD NO. 804S-2 1 OF 8

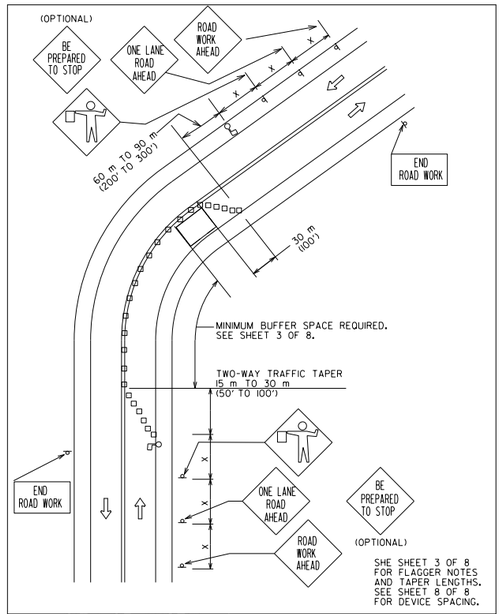

CITY OF AUSTIN DEPARTMENT OF PUBLIC WORKS	FLAGGER SETUP FOR 2 LANE ROADWAY	
RECORD COPY SIGNED BY BILL GARDNER 03/13/06 ADOPTED	THE ARCHITECT/ENGINEER ASSUMES RESPONSIBILITY FOR APPROPRIATE USE OF THIS STANDARD.	STANDARD NO. 804S-2 2 OF 8

1. FOR DAYTIME WORK, THE FLAGGER SHALL WEAR AN APPROVED BRIGHTLY COLORED VEST. FOR NIGHTTIME WORK, THE VEST SHALL BE RETROFLECTIVE. THE RETRO-REFLECTIVE MATERIAL SHALL BE ORANGE, YELLOW, WHITE, SILVER, STRONG YELLOW-GREEN OR A FLOURESCENT VERSION OF THESE COLORS AND SHALL BE VISIBLE AT A MINIMUM DISTANCE OF 305 m (1,000').
2. FOR LOW-VOLUME APPLICATIONS, A SINGLE FLAGGER MAY BE ADEQUATE. WHERE ONE FLAGGER CAN BE USED, SUCH AS FOR SHORT WORK AREAS ON STRAIGHT ROADWAYS, THE FLAGGER MUST BE VISIBLE TO APPROACHING TRAFFIC FROM BOTH DIRECTIONS.
3. FLAGGERS SHALL USE ONLY STOP/SLOW PADDLE TO DIRECT TRAFFIC UNLESS WORKING IN A SIGNALIZED INTERSECTION WHERE DRIVERS MAY BE CONFUSED BY THE SIGN PADDLE. HAND SIGNAL MAY BE USED IN THESE SITUATIONS.
4. FLAGGERS SHALL ENSURE THAT ALL REQUIRED SIGNING IS IN PLACE PRIOR TO BEGINNING FLAGGING OPERATIONS.
5. FLAGGERS SHALL NOT PERFORM WORK THAT IS NOT RELATED TO FLAGGING WHILE ON DUTY.
6. FLAGGERS MAY CARRY AIR HORNS OR WHISTLES TO WARN WORKERS OF AN EMERGENCY CONDITION.
7. FLAGGERS SHALL BE REQUIRED TO USE TWO-WAY RADIOS WHEN OUT OF CLEAR VIEW OF EACH OTHER.
8. FLOODLIGHTS SHOULD BE PROVIDED TO MARK FLAGGER STATIONS AT NIGHT AS NEEDED.

TAPER LENGTHS

SPEED (kmph)	SPEED* (mph)	LENGTH (meters)	LENGTH (feet)
30	20	11	35
40	25	17	55
50	30	26	85
55	35	36	120
65	40	51	170
70	45	66	220
80	50	84	280
90	55	101	335
95	60	125	415
105	65	146	485

*POSTED SPEED

CITY OF AUSTIN DEPARTMENT OF PUBLIC WORKS	FLAGGER SETUP FOR 2 LANE ROADWAY	
RECORD COPY SIGNED BY BILL GARDNER 03/13/06 ADOPTED	THE ARCHITECT/ENGINEER ASSUMES RESPONSIBILITY FOR APPROPRIATE USE OF THIS STANDARD.	STANDARD NO. 804S-2 3 OF 8

NUMBER	DATE	REVISION	APPROVED

CEDAR PARK

Binkley & Barfield, Inc
consulting engineers
Texas Registration Number F-257

ANDERSON MILL ROAD
GASPAR BEND TO WHITESTONE BLVD
STANDARD DETAILS TRAFFIC CONTROL

DESIGN BY:	GCC	SCALE: N/A	
DRAWN BY:	DSH		
CHECKED BY:	DRE	SHEET:	
APPROVED BY:	BDR		
PROJECT NO:	156402	PAGE: 213	
DATE:	10/6/2016		

10/6/2016
8:50:46 AM
...\CADD\SHEETS\TCSD1*AM*02.dgn

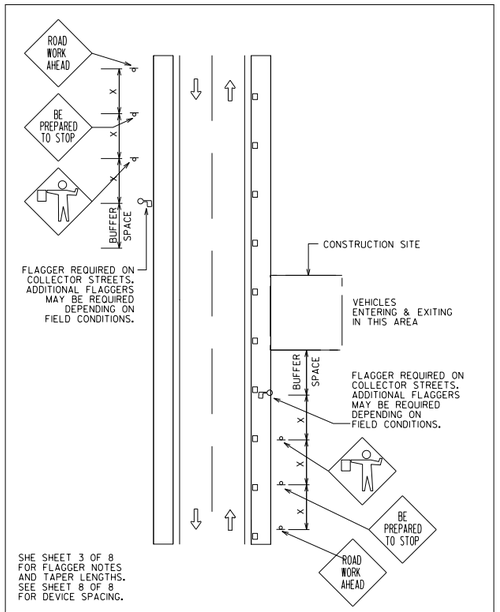

SHE SHEET 3 OF 8 FOR FLAGGER NOTES AND TAPER LENGTHS. SEE SHEET 8 OF 8 FOR DEVICE SPACING.

CITY OF AUSTIN DEPARTMENT OF PUBLIC WORKS	FLAGGER SETUP FOR VEHICLES ENTERING AND EXITING WORK SITE	
RECORD COPY SIGNED BY BILL GARDNER 03/13/06 ADOPTED	THE ARCHITECT/ENGINEER ASSUMES RESPONSIBILITY FOR APPROPRIATE USE OF THIS STANDARD.	STANDARD NO. 804S-2 4 OF 8

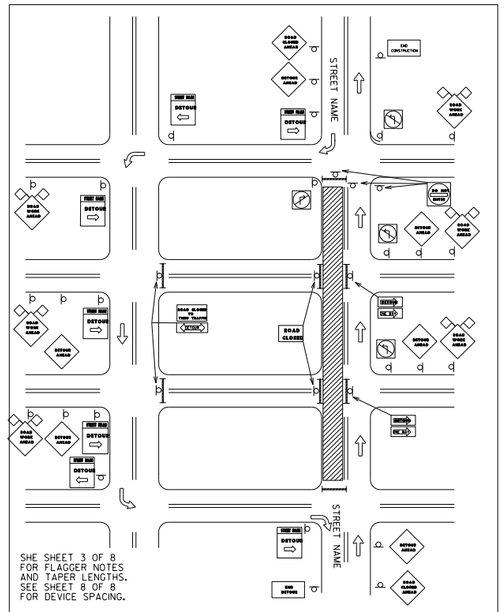

SHE SHEET 3 OF 8 FOR FLAGGER NOTES AND TAPER LENGTHS. SEE SHEET 8 OF 8 FOR DEVICE SPACING.

CITY OF AUSTIN DEPARTMENT OF PUBLIC WORKS	STREET DETOUR SINGLE DIRECTION	
RECORD COPY SIGNED BY BILL GARDNER 03/13/06 ADOPTED	THE ARCHITECT/ENGINEER ASSUMES RESPONSIBILITY FOR APPROPRIATE USE OF THIS STANDARD.	STANDARD NO. 804S-2 5 OF 8

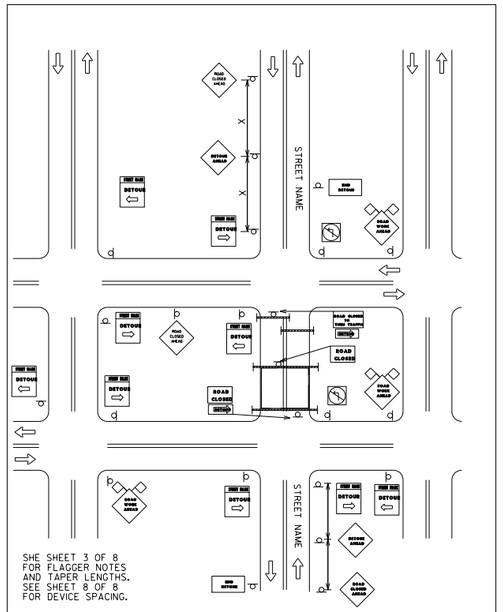

SHE SHEET 3 OF 8 FOR FLAGGER NOTES AND TAPER LENGTHS. SEE SHEET 8 OF 8 FOR DEVICE SPACING.

CITY OF AUSTIN DEPARTMENT OF PUBLIC WORKS	STREET DETOUR BOTH DIRECTIONS	
RECORD COPY SIGNED BY BILL GARDNER 03/13/06 ADOPTED	THE ARCHITECT/ENGINEER ASSUMES RESPONSIBILITY FOR APPROPRIATE USE OF THIS STANDARD.	STANDARD NO. 804S-2 6 OF 8

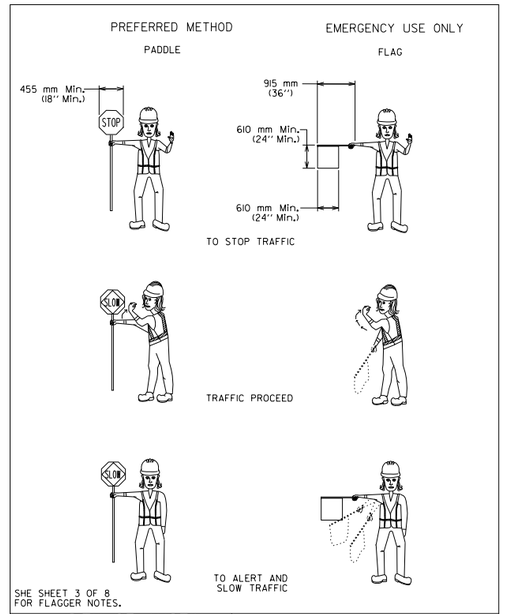

SHE SHEET 3 OF 8 FOR FLAGGER NOTES.

CITY OF AUSTIN DEPARTMENT OF PUBLIC WORKS	USE OF HAND SIGNALING DEVICES	
RECORD COPY SIGNED BY BILL GARDNER 03/13/06 ADOPTED	THE ARCHITECT/ENGINEER ASSUMES RESPONSIBILITY FOR APPROPRIATE USE OF THIS STANDARD.	STANDARD NO. 804S-2 7 OF 8

Typical Transition Lengths and Suggested Maximum Spacing of Devices

Speed KMPH	Posted Speed MPH	Formula	Minimum Desirable Taper Lengths (L) Meters (Feet) 3.0(10) Offset Meters (feet)	3.3(11) Offset Meters (feet)	3.6(12) Offset Meters (feet)	Suggested Max. Device Spacing On a taper Meters (feet)	On a tangent Meters (feet)	Suggested Sign Spacing Meters (Feet) "X" Dimension
50	30	$L=\frac{WS^2}{60}$	45 (150)	50 (165)	55 (180)	9 (30)	15-20 (60-75)	40 (120)
55	35		65 (205)	70 (225)	75 (245)	10 (35)	25-25 (70-90)	50 (160)
65	40		80 (265)	90 (295)	100 (320)	12 (40)	25-30 (80-100)	75 (240)
70	45	L=WS	135 (450)	150 (495)	165 (540)	13 (45)	25-30 (90-110)	100 (320)
80	50		150 (500)	165 (550)	180 (600)	15 (50)	30-35 (100-125)	120 (400)
90	55		165 (550)	185 (605)	200 (660)	16 (55)	35-40 (110-140)	150 (500)
95	60		180 (600)	200 (660)	220 (720)	18 (60)	40-45 (120-150)	180 (600)
105	65		195 (650)	215 (715)	235 (780)	19 (65)	40-50 (130-165)	210 (700)
115	70		215 (700)	235 (770)	255 (840)	21 (70)	45-55 (140-175)	240 (800)

LEGEND

- Channelizing devices
- Trailer mounted flashing arrow board
- Flagger

TRAFFIC DETOUR NOTES:

1. "STREET CLOSED" AND "STREET CLOSED TO THRU TRAFFIC" MAY BE USED IN PLACE OF "ROAD CLOSED" AND "ROAD CLOSED TO THRU TRAFFIC".
2. THE USE OF A STREET SIGN NAME NAME MOUNTED WITH THE M4-9 DETOUR SIGN•• IS REQUIRED. THE STREET NAME PLATE SHOULD BE PLACED ABOVE THE DETOUR SIGN. THE PLATE MAY HAVE EITHER A WHITE-ON-GREEN OR A BLACK-ON-ORANGE LEGEND.
3. ADDITIONAL "DO NOT ENTER SIGNS" MAY BE DESIRABLE AT INTERSECTIONS WITH INTERVENING STREETS.
4. A M4-9 DETOUR SIGN•• WITH AN ADVANCE TURN ARROW MAY BE USED IN ADVANCE OF A TURN. ON MULTI-LANE STREETS, SUCH SIGNS SHOULD BE USED.
5. M4-9 DETOUR SIGNS•• MAY BE LOCATED ON THE FAR SIDE OF INTERSECTIONS.

•• TEXAS MANUAL ON UNIFORM TRAFFIC CONTROL DEVICES

CITY OF AUSTIN DEPARTMENT OF PUBLIC WORKS	TYPICAL LENGTHS & SPACING OF DEVICES, LEGEND and GENERAL NOTES	
RECORD COPY SIGNED BY BILL GARDNER 03/13/06 ADOPTED	THE ARCHITECT/ENGINEER ASSUMES RESPONSIBILITY FOR APPROPRIATE USE OF THIS STANDARD.	STANDARD NO. 804S-2 8 OF 8

STANDARD WORK ZONE PAVEMENT MARKINGS DETAIL

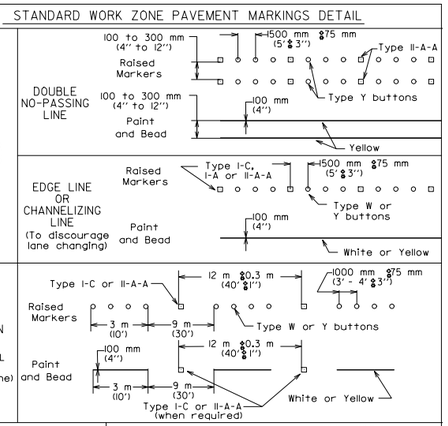

SEE STANDARD 804S-3 SHEET 5 OF 5 FOR GENERAL NOTES.

NOTE: IF RAISED PAVEMENT MARKERS ARE USED TO SUPPLEMENT REMOVABLE MARKINGS, THE MARKERS SHALL BE APPLIED TO THE TOP OF THE TAPE AT THE APPROXIMATE MID-LENGTH OF TAPE BROKEN LINES AND AT APPROXIMATE 6 m (20') SPACING FOR SOLID LINES. THIS ALLOWS AN EASIER REMOVAL OF RAISED MARKERS AND TAPE.

CITY OF AUSTIN DEPARTMENT OF PUBLIC WORKS	TEMPORARY TRAFFIC CONTROL PAVEMENT MARKINGS	
RECORD COPY SIGNED BY BILL GARDNER 03/13/06 ADOPTED	THE ARCHITECT/ENGINEER ASSUMES RESPONSIBILITY FOR APPROPRIATE USE OF THIS STANDARD.	STANDARD NO. 804S-3 1 OF 5

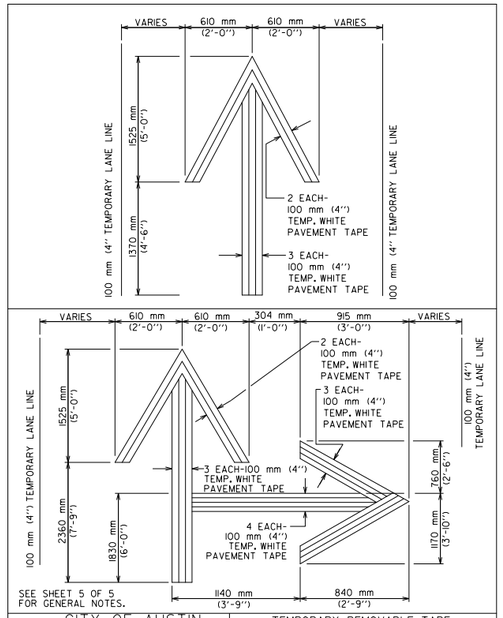

SEE SHEET 5 OF 5 FOR GENERAL NOTES.

CITY OF AUSTIN DEPARTMENT OF PUBLIC WORKS	TEMPORARY REMOVABLE TAPE, ARROWS AND LEGENDS	
RECORD COPY SIGNED BY BILL GARDNER 03/13/06 ADOPTED	THE ARCHITECT/ENGINEER ASSUMES RESPONSIBILITY FOR APPROPRIATE USE OF THIS STANDARD.	STANDARD NO. 804S-3 2 OF 5

NUMBER	DATE	REVISION	APPROVED

CEDAR PARK

Binkley & Barfield, Inc
consulting engineers
Texas Registration Number F-257

ANDERSON MILL ROAD
GASPAR BEND TO WHITESTONE BLVD
STANDARD DETAILS TRAFFIC CONTROL

DESIGN BY:	GCC	SCALE: N/A
DRAWN BY:	DSH	
CHECKED BY:	DRE	
APPROVED BY:	BDR	SHEET:
PROJECT NO:	156402	
DATE:	10/6/2016	PAGE: 214

10/6/2016
8:50:47 AM
...\CADD\SHEETS\TCSD1*AM*03.dgn

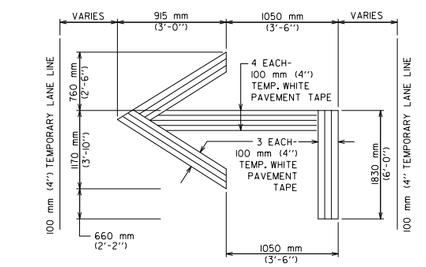

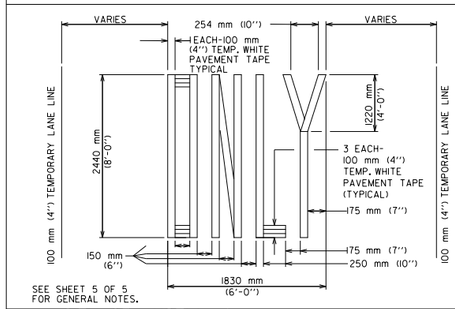

SEE SHEET 5 OF 5 FOR GENERAL NOTES.

CITY OF AUSTIN DEPARTMENT OF PUBLIC WORKS		TEMPORARY REMOVABLE TAPE, ARROWS AND LEGENDS	
RECORD COPY SIGNED BY BILL GARDNER	03/13/06 ADOPTED	THE ARCHITECT/ENGINEER ASSUMES RESPONSIBILITY FOR APPROPRIATE USE OF THIS STANDARD.	STANDARD NO. 804S-3 3 OF 5

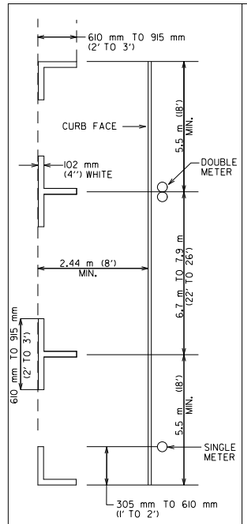

PARKING STALLS

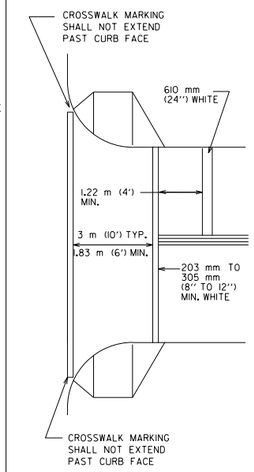

CROSSWALK AND STOPBARS

SEE SHEET 5 OF 5 FOR GENERAL NOTES.

CITY OF AUSTIN DEPARTMENT OF PUBLIC WORKS		PARKING STALLS, CROSSWALK AND STOP BARS	
RECORD COPY SIGNED BY BILL GARDNER	03/13/06 ADOPTED	THE ARCHITECT/ENGINEER ASSUMES RESPONSIBILITY FOR APPROPRIATE USE OF THIS STANDARD.	STANDARD NO. 804S-3 4 OF 5

1. ALL PAVEMENT MARKINGS USED SHALL CONFORM TO THE CURRENT EDITION OF THE TEXAS MANUAL ON UNIFORM TRAFFIC CONTROL DEVICES (TMUTCD) AND THE CITY OF AUSTIN TRANSPORTATION CRITERIA MANUAL.
2. THE CONTRACTOR SHALL BE RESPONSIBLE FOR MAINTAINING ALL TEMPORARY AND EXISTING PAVEMENT MARKINGS ON ALL ROADWAYS WITHIN THE CONSTRUCTION LIMITS AND ON ANY ROADWAY OUTSIDE THE CONSTRUCTION LIMITS THAT REQUIRES THE REROUTING OF TRAFFIC FOR HIS WORK.
3. ALL ROADWAYS TO BE OPENED TO TRAFFIC SHALL HAVE TEMPORARY OR STANDARD PAVEMENT MARKINGS INSTALLED AS SHOWN IN THE DRAWINGS, AT THE END OF EACH DAY'S OPERATION.
4. MARKINGS SHALL PROVIDE A VISIBLE REFERENCE FOR A MINIMUM DISTANCE OF 91.5 m (300') DURING NORMAL DAYLIGHT HOURS AND 49 m (160') WHEN ILLUMINATED BY AUTOMOBILE LOW-BEAM HEADLIGHTS AT NIGHT, UNLESS SIGHT DISTANCE IS RESTRICTED BY ROADWAY GEOMETRICS.
5. ALL TEMPORARY REMOVABLE PAVEMENT MARKINGS SHALL BE SUPPLEMENTED WITH RAISED PAVEMENT MARKERS.
6. TEMPORARY REMOVABLE PAVEMENT MARKING TAPE IS THE PREFERRED PAVEMENT MARKING; HOWEVER, THE CONTRACTOR MAY, WITH APPROVAL OF THE ENGINEER OR DESIGNATED REPRESENTATIVE, USE RAISED PAVEMENT MARKINGS, PAINT AND BEADS OR THERMOPLASTIC IF THE ROADWAY IS TO BE COMPLETELY RESURFACED.
7. PAVEMENT MARKINGS THAT ARE NO LONGER APPLICABLE AND WHICH MAY CREATE CONFUSION OR DIRECT A MOTORIST TOWARD OR INTO THE CLOSED PORTION OF THE ROADWAY, SHALL BE REMOVED OR OBLITERATED BEFORE THE ROADWAY IS OPENED TO TRAFFIC. THE ABOVE DOES NOT APPLY TO SHORT-DURATION, SHORT TERM STATIONARY OR INTERMEDIATE TERM STATIONARY WORK.
8. REMOVAL OR OBLITERATION OF PAVEMENT MARKINGS INCLUDES CENTERLINES, CHANNELIZING LINES, LANE LINES, EDGE LINES, WORDS, ARROWS, SYMBOLS AND RAISED PAVEMENT MARKINGS.
9. PAVEMENT MARKINGS SHALL BE REMOVED OR OBLITERATED TO THE FULLEST EXTENT POSSIBLE, SO AS NOT TO LEAVE A DISCERNIBLE MARK. GRINDING OF PAVEMENT MARKINGS WILL ONLY BE ALLOWED ON PAVEMENT THAT IS TO BE COMPLETELY REPLACED.
10. TEMPORARY FLEXIBLE-REFLECTIVE TABS MAY BE USED FOR TEMPORARY PAVEMENT MARKINGS ON NEW PAVEMENT, PROVIDED THEY ARE PLACED ON 1.5 m (5') CENTERS.
11. THE CONTRACTOR SHALL PLACE TEMPORARY FLEXIBLE-REFLECTIVE TABS IMMEDIATELY AFTER THE FINAL HMAC OVERLAY AS EACH LANE IS COMPLETED AND READY FOR TRAFFIC. NO DIRECT PAYMENT WILL BE MADE FOR THIS OPERATION, BUT WILL BE CONSIDERED SUBSIDIARY TO THE OTHER BID ITEMS. FINAL STRIPING SHOULD BE COMPLETED WITHIN FOURTEEN (14) DAYS OF THE FINAL PAVING.

CITY OF AUSTIN DEPARTMENT OF PUBLIC WORKS		GENERAL NOTES	
RECORD COPY SIGNED BY BILL GARDNER	03/13/06 ADOPTED	THE ARCHITECT/ENGINEER ASSUMES RESPONSIBILITY FOR APPROPRIATE USE OF THIS STANDARD.	STANDARD NO. 804S-3 5 OF 5

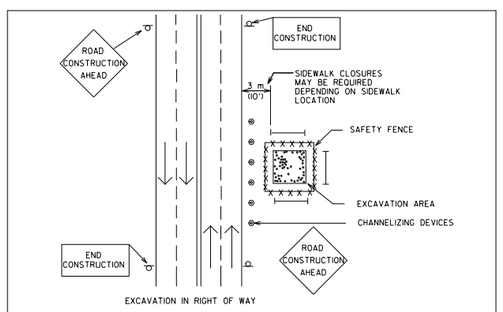

EXCAVATION IN RIGHT OF WAY

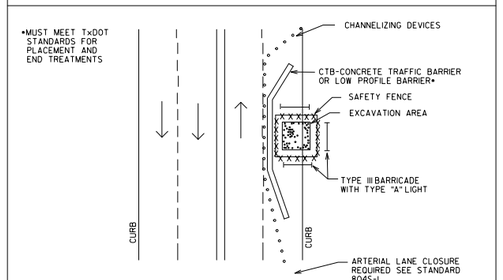

EXCAVATION IN ROADWAY

CITY OF AUSTIN DEPARTMENT OF PUBLIC WORKS		LARGE EXCAVATION	
RECORD COPY SIGNED BY SAM ANGOORI	04/03/09 ADOPTED	THE ARCHITECT/ENGINEER ASSUMES RESPONSIBILITY FOR APPROPRIATE USE OF THIS STANDARD.	STANDARD NO. 804S-4 3 OF 9

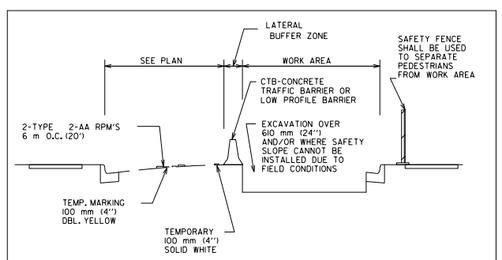

POSITIVE BARRIERS TYPICAL CROSS SECTION

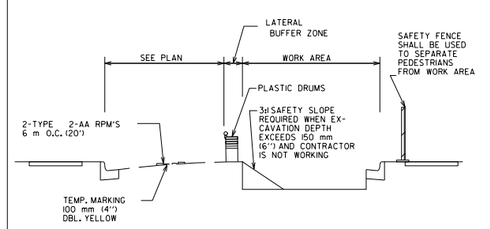

SAFETY SLOPE TYPICAL CROSS SECTION

CITY OF AUSTIN DEPARTMENT OF PUBLIC WORKS		WORK AREA PROTECTION	
RECORD COPY SIGNED BY SAM ANGOORI	04/03/09 ADOPTED	THE ARCHITECT/ENGINEER ASSUMES RESPONSIBILITY FOR APPROPRIATE USE OF THIS STANDARD.	STANDARD NO. 804S-4 4 OF 9

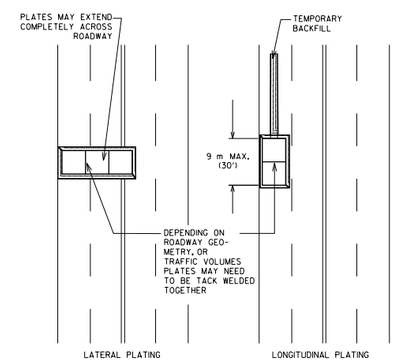

CITY OF AUSTIN DEPARTMENT OF PUBLIC WORKS		STEEL PLATING	
RECORD COPY SIGNED BY SAM ANGOORI	04/03/09 ADOPTED	THE ARCHITECT/ENGINEER ASSUMES RESPONSIBILITY FOR APPROPRIATE USE OF THIS STANDARD.	STANDARD NO. 804S-4 5 OF 9

NUMBER	DATE	REVISION	APPROVED

CEDAR PARK

Binkley & Barfield, Inc
consulting engineers
Texas Registration Number F-257

ANDERSON MILL ROAD
GASPAR BEND TO WHITESTONE BLVD
STANDARD DETAILS TRAFFIC CONTROL

DESIGN BY: GCC		SCALE: N/A
DRAWN BY: DSH		
CHECKED BY: DRE		
APPROVED BY: BDR		SHEET:
PROJECT NO: 156402		
DATE: 10/6/2016		PAGE: 215

10/6/2016
8:50:48 AM
...\CADD\SHEETS\TCSD1*AM*04.dgn

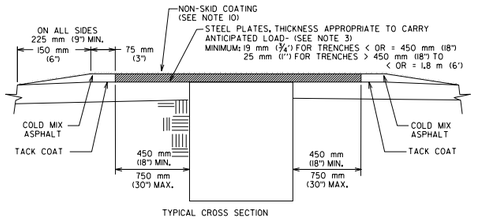

TYPICAL CROSS SECTION

CASE I- LOW TRAFFIC VOLUME/LIMITED IN-SERVICE TIME

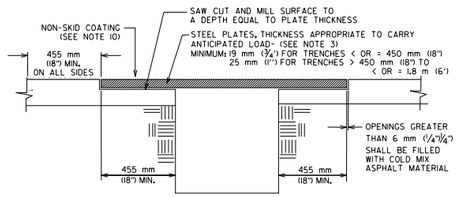

TYPICAL CROSS SECTION

CASE II- EXTENDED IN-SERVICE PLATING AND/OR
HEAVILY-TRAFFICKED ROADS/STREETS
(HMAC PAVEMENTS ONLY)

CITY OF AUSTIN DEPARTMENT OF PUBLIC WORKS		STEEL PLATING	
RECORD COPY SIGNED BY SAM ANGOORI	04/03/09 ADOPTED	THE ARCHITECT/ENGINEER ASSUMES RESPONSIBILITY FOR APPROPRIATE USE OF THIS STANDARD.	STANDARD NO. 804S-4 6 OF 9

NOTES:

1. WHERE TRAFFIC MUST CROSS TRENCHES, THE CONTRACTOR SHALL PROVIDE SUITABLE BRIDGES.
2. THE USE OF STEEL PLATES SHALL BE APPROVED BY THE RIGHT OF WAY MANAGEMENT DIVISION OF WATERSHED PROTECTION AND DEVLOPMENT DEPARTMENT PRIOR TO INITIATION OF CONSTRUCTION.
3. THE THICKNESS OF PLATES FOR TRENCH WIDTHS EXCEEDING 1.8 m (6') SHALL BE ESTABLISHED IN AN ANALYSIS COMPLETED BY A LICENSED PROFESSIONAL ENGINEER, REGISTERED IN THE STATE OF TEXAS. THE ANALYSIS SHALL BE BASED ON HS-20 TRAFFIC LOADING WITH A MAXIMUM PLATE DEFLECTION OF 50 mm (1/2") WHEN EXPERIENCING SAID LOADING. FOR SITUATIONS WHERE MULTIPLE LAYERS OF PLATES (OR STACKED PLATES) ARE TO BE EMPLOYED, THE SEAMS (IE. THE INTER-FACE BETWEEN PLACED SIDE-BY-SIDE) OF THE UPPER LAYER SHALL BE PLACED PERPENDICULAR TO THE SEAMS OF THE UNDERLYING PLATES.
4. WHEN APPROVED, THE TYPE OF PLATE INSTALLATION SHALL BE BASED ON THE ANTICIPATED LENGTH OF TIME THE PLATE WILL BE IN SERVICE:
   CASE I: A CASE I INSTALLATION SHALL APPLY FOR NO LONGER THAN A 2 WEEK PERIOD.
   CASE II: A CASE II INSTALLATION SHALL APPLY FOR NO LONGER THAN 2 WEEK PERIOD.
5. THE TOPSIDE OF THE STEEL PLATE SHALL BE FLAT AND FREE OF ANY CLIPS, CHAINS, ATTACHMENTS, WELDMENTS OR SURFACE IRREGULARITIES.
6. PLATES WITH A PERMANENT DISPLACEMENT (I.E. DISPLACEMENT ANYWHERE ON THE SURFACE OF THE PLATE WITH RESPECT TO A PLANE FORMED BY THE OUTSIDE EDGES) THAT EXCEEDS 12 mm (1/2") SHALL NOT BE USED FOR PLATING PURPOSES. PLATES THAT DEVELOP A PERMANENT DISPLACEMENT EXCEEDING 12 mm (1/2") DURING SERVICE SHALL BE REMOVED AND REPLACED.
7. THE PLATES SHALL BE PROVIDED WITH APPROPRIATE NUMBER OF KEYHOLE SLOTS OR CIRCULAR HOLES FOR HANDLING, LIFTING, INSTALLATION AND REMOVAL PURPOSES.
8. THE CONTRACTOR SHOULD AVOID USING A LONG SERIES OF PLATES THAT RUN PARALLEL TO VEHICULAR TRAFFIC WHEELS PATHS.
9. ADDITIONAL METHODS OF SECURING PLATES MAY BE REQUIRED DEPENDING ON FIELD CONDITIONS.
10. FOR PLATES 1.8 M (6') OR GREATER IN DIRECTION OF TRAFFIC, A NON-SKID COATING SHOULD BE APPLIED TO THE ENTIRE SURFACE AREA OF ALL PLATES, AS WELL AS ADJACENT AREAS. THE NON-SKID COATING SHALL BE TCA (TEXTURED COATING OF AMERICA, INC.) STRATA-GRIP DECK COATING SYSTEM; SLIPFIX, INC. SP5 (SLIP PROTECTION SURFACE) OR AN EQUIVALENT PRODUCT APPROVED BY THE ENGINEER OR DESIGNATED REPRESENTATIVE.

CITY OF AUSTIN DEPARTMENT OF PUBLIC WORKS		STEEL PLATING	
RECORD COPY SIGNED BY SAM ANGOORI	04/03/09 ADOPTED	THE ARCHITECT/ENGINEER ASSUMES RESPONSIBILITY FOR APPROPRIATE USE OF THIS STANDARD.	STANDARD NO. 804S-4 7 OF 9

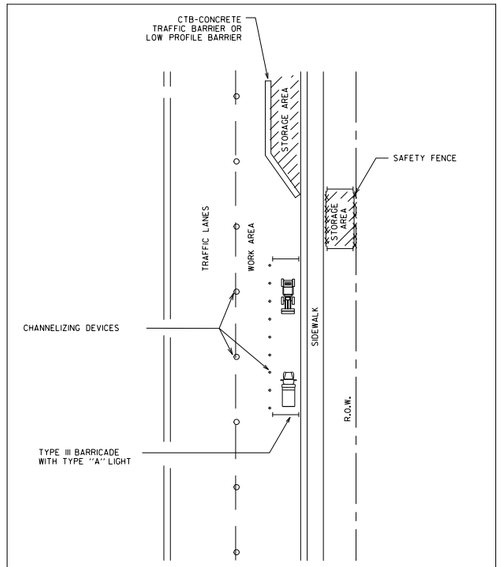

CITY OF AUSTIN DEPARTMENT OF PUBLIC WORKS		MATERIAL AND EQUIPMENT STORAGE	
RECORD COPY SIGNED BY SAM ANGOORI	04/03/09 ADOPTED	THE ARCHITECT/ENGINEER ASSUMES RESPONSIBILITY FOR APPROPRIATE USE OF THIS STANDARD.	STANDARD NO. 804S-4 8 OF 9

1. STORAGE OF EQUIPMENT AND MATERIALS SHALL BE RESTRICTED TO LOCATIONS WHERE DRIVER SIGHT DISTANCES TO TRAFFIC, PEDESTRIANS, BUSINESSES AND SIDE STREET INTERSECTIONS ARE NOT OBSTRUCTED OR WHERE AN UNSIGHTLY APPEARANCE, AS DETERMINED BY THE ENGINEER, WILL NOT EXIST.
2. EQUIPMENT MUST BE PARKED AS FAR AWAY FROM THE TRAVELWAYS AS PRACTICAL.
3. TOTAL AREA USED FOR EQUIPMENT STORAGE SHALL BE KEPT TO A MINIMUM.
4. ALL MATERIALS STORED IN THE RIGHT-OF-WAY MUST BE MAINTAINED IN A NEAT AND ORGANIZED MANNER.
5. MATERIALS STORED MAY NOT BE MORE THAN 915 mm (36") IN HEIGHT.
6. ALL MATERIALS STORED MUST BE USED WITHIN THREE (3) DAYS.

CITY OF AUSTIN DEPARTMENT OF PUBLIC WORKS		MATERIAL AND EQUIPMENT STORAGE	
RECORD COPY SIGNED BY SAM ANGOORI	04/03/09 ADOPTED	THE ARCHITECT/ENGINEER ASSUMES RESPONSIBILITY FOR APPROPRIATE USE OF THIS STANDARD.	STANDARD NO. 804S-4 9 OF 9

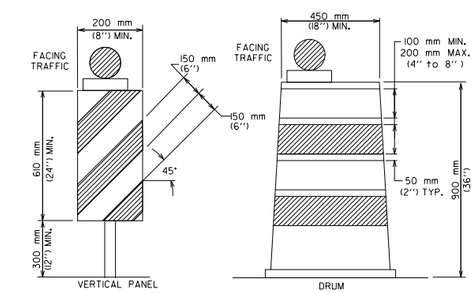

LONG TERM AND INTERMEDIATE TERM STATIONARY WORK

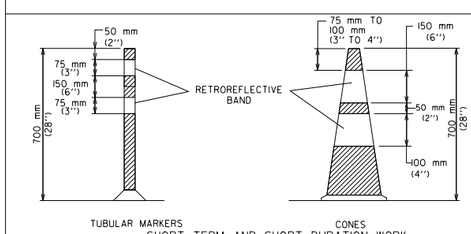

SHORT TERM AND SHORT DURATION WORK

SEE STANDARD 804S-5
SHEET 12 OF 13 AND SHEET 13 OF 13
FOR GENERAL NOTES AND DEVICE SPACING.

CITY OF AUSTIN DEPARTMENT OF PUBLIC WORKS		CHANNELIZING DEVICES	
RECORD COPY SIGNED BY SAM ANGOORI	01/04/10 ADOPTED	THE ARCHITECT/ENGINEER ASSUMES RESPONSIBILITY FOR APPROPRIATE USE OF THIS STANDARD.	STANDARD NO. 804S-5 1 OF 13

CHANNELIZING DEVICES

1. ALL CHANNELIZING DEVICES SHALL HAVE WARNING LIGHTS OR LARGE REFLECTORS WHEN USED AT NIGHT. FLASHING WARNING LIGHTS MAY BE PLACED ON CHANNELIZING DEVICES USED SINGULARLY OR IN GROUPS TO MARK A SPOT CONDITION. WARNING LIGHTS ON CHANNELIZING DEVICES USED IN A SERIES SHALL BE STEADY-BURN. CHANNELIZING DEVICES IN TAPERS AT NIGHT SHALL HAVE TYPE C WARNING LIGHTS.
2. THE RETROREFLECTIVE MATERIAL USED ON CHANNELIZING DEVICES SHALL HAVE A SMOOTH, SEALED OUTER SURFACE.
3. THE NAME AND TELEPHONE NUMBER OF THE AGENCY, CONTRACTOR OR SUPPLIER SHALL BE SHOWN ON THE NON-RETROREFLECTIVE SURFACE OF ALL CHANNELIZING DEVICES. THE LETTERS AND NUMBERS SHALL BE A NON-RETROREFLECTIVE COLOR AND NOT OVER 50 mm (2") IN HEIGHT.
4. PARTICULAR ATTENTION SHOULD BE GIVEN TO ASSURE THAT CHANNELIZING DEVICES ARE MAINTAINED AND KEPT CLEAN, VISIBLE AND PROPERLY POSTITIONED AT ALL TIMES. DEVICES SHALL BE REPLACED THAT ARE DAMAGED AND HAVE LOST A SIGNIFICANT AMOUNT OF THEIR RETROREFLECTIVITY AND EFFECTIVENESS.

CONES

CONES SHALL PREDOMINANTLY BE ORANGE, FLUORESCENT RED-ORANGE, OR FLUORESCENT YELLOW-ORANGE IN COLOR, NOT LESS THAN 70 mm (28") IN HEIGHT, AND SHALL BE MADE OF A MATERIAL THAT CAN BE STRUCK WITHOUT DAMAGING VEHICLES ON IMPACT. FOR NIGHT TIME USE, CONES SHALL BE RETROREFLECTIVE OR EQUIPPED WITH LIGHTING DEVICES FOR MAXIMUM VISIBILITY. RETROREFLECTION OF CONES SHALL BE PROVIDED BY A WHITE BOND 150 mm (6") WIDE, NO MORE THAN 75 TO 100 mm (3 TO 4") FROM THE TOP OF THE CONE, AND AN ADDITIONAL 100 mm (4") WHITE BAND A MINIMUM OF 50 mm (2") BELOW THE 150 mm (6") BAND. TRAFFIC CONES ARE NORMALLY USED FOR SHORT-TERM STATIONARY AND SHORT DURATION WORK. HOWEVER, CONES MAY BE USED FOR INTERMEDIATE-TERM STATIONARY WORK AT NIGHT, IF THE SITE IS CONTINUOUSLY MANNED.

TUBULAR MARKERS

TUBULAR MARKERS SHALL PREDOMINANTLY BE ORANGE IN COLOR, NOT LESS THAN 700 mm (28") IN HEIGHT , A MINIMUM 50 mm (2") WIDE WHEN FACING TRAFFIC AND MADE OF A MATERIAL THAT CAN BE STRUCK WITHOUT DAMAGING VEHICLES. FOR NIGHT TIME USE, TUBULAR MARKERS SHALL BE RETROREFLECTIVE PROVIDED BY TWO (2) 75 mm (3") WIDE WHITE BANDS PLACED A MAXIMUM OF 50 mm (2") FROM THE TOP, WITH A MAXIMUM OF 150 mm (6") BETWEEN BANDS. TUBULAR MARKERS ARE NORMALLY USED FOR SHORT-TERM STATIONARY AND SHORT DURATION WORK. HOWEVER, TUBULAR MARKERS MAY BE USED FOR INTERMEDIATE-TERM STATIONARY WORK AT NIGHT, IF THE SITE IS CONTINUOUSLY MANNED.

VERTICAL PANELS

VERTICAL PANELS SHALL BE 200 TO 300 mm (8 TO 12") WIDE AND AT LEAST 600 mm (24") IN HEIGHT. THEY SHALL HAVE ORANGE AND WHITE STRIPES, AND BE RETROREFLECTIVE. PANEL STRIPE WIDTHS SHALL BE 150 mm (6") EXCEPT WHERE PANEL HEIGHTS ARE LESS THAN 900 mm (36"), WHEN 100 mm (4") STRIPES MAY BE USED. IF USED FOR TWO-WAY TRAFFIC, BACK-TO-BACK PANELS SHALL BE USED.

DRUMS

1. DRUMS USED FOR TRAFFIC WARNING OR CHANNELIZATION SHALL BE CONSTRUCTED OF LIGHT-WEIGHT FLEXIBLE AND DEFORMABLE MATERIALS AND BE A MINIMUM OF 900 mm (36") IN HEIGHT, AND HAVE AT LEAST 450 mm (18") MINIMUM WIDTH, REGARDLESS OF OREINTATION. STEEL DRUMS SHALL NOT BE USED. THE MARKINGS ON DRUMS SHALL BE HORIZONTAL, CIRCUNFERENTIAL, ALTERNATING ORANGE AND WHITE RETROREFLECTIVE STRIPES 100 TO 200 mm (4 TO 8") WIDE. EACH DRUM SHALL HAVE A MINIMUM OF TWO (2) ORANGE AND TWO (2) WHITE STRIPES. ANY NON-RETROREFLECTIVE SPACES BETWEEN THE HORIZONTAL ORANGE AND WHITE STRIPES, SHALL NOT EXCEED 50 mm (2") WIDE. DRUMS SHALL HAVE CLOSED TOPS THAT WILL NOT ALLOW COLLECTION OF ROADWORK OR OTHER DEBRIS.
2. DRUMS SHOULD NOT BE WEIGHTED WITH SAND, WATER OR ANY MATERIAL TO AN EXTENT THAT WOULD MAKE THE HAZARDOUS TO MOTORISTS, PEDESTRIANS OR WORKERS. WHEN THEY ARE USED IN REGIONS SUSCEPTIBLE TO FREEZING, THEY SHOULD HAVE DRAINAGE HOLES IN THE BOTTOM SO WATER WILL NOT ACCUMULATE AND FREEZE,CAUSING A HAZARD IF STRUCK BY A MOTORIST. BALLAST SHALL NOT BE PLACED ON TOP OF THE DRUM.

CITY OF AUSTIN DEPARTMENT OF PUBLIC WORKS		CHANNELIZING DEVICES	
RECORD COPY SIGNED BY SAM ANGOORI	01/04/10 ADOPTED	THE ARCHITECT/ENGINEER ASSUMES RESPONSIBILITY FOR APPROPRIATE USE OF THIS STANDARD.	STANDARD NO. 804S-5 2 OF 13

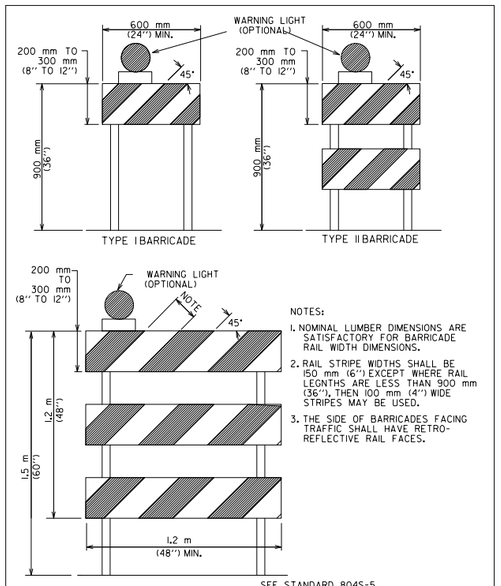

NOTES:

1. NOMINAL LUMBER DIMENSIONS ARE SATISFACTORY FOR BARRICADE RAIL WIDTH DIMENSIONS.
2. RAIL STRIPE WIDTHS SHALL BE 150 mm (6") EXCEPT WHERE RAIL LEGNTHS ARE LESS THAN 900 mm (36"), THEN 100 mm (4") WIDE STRIPES MAY BE USED.
3. THE SIDE OF BARRICADES FACING TRAFFIC SHALL HAVE RETRO-REFLECTIVE RAIL FACES.

SEE STANDARD 804S-5
SHEET 12 OF 13 AND SHEET 13 OF 13
FOR GENERAL NOTES AND DEVICE SPACING.

CITY OF AUSTIN DEPARTMENT OF PUBLIC WORKS		BARRICADES	
RECORD COPY SIGNED BY SAM ANGOORI	01/04/10 ADOPTED	THE ARCHITECT/ENGINEER ASSUMES RESPONSIBILITY FOR APPROPRIATE USE OF THIS STANDARD.	STANDARD NO. 804S-5 3 OF 13

NUMBER	DATE	REVISION	APPROVED

CEDAR PARK

Binkley & Barfield, Inc
consulting engineers
Texas Registration Number F-257

ANDERSON MILL ROAD
GASPAR BEND TO WHITESTONE BLVD
STANDARD DETAILS TRAFFIC CONTROL

DESIGN BY:	GCC	SCALE: N/A
DRAWN BY:	DSH	
CHECKED BY:	DRE	SHEET:
APPROVED BY:	BDR	
PROJECT NO:	156402	PAGE: 216
DATE:	10/6/2016	

10/6/2016
8:50:48 AM
...\CADD\SHEETS\TCSD1*AM*05.dgn

BARRICADES

1. BARRICADES SHALL BE OF THREE TYPES: TYPE I, TYPE II OR TYPE III.
2. STRIPES ON BARRICADE RAILS SHALL BE ALTERNATING ORANGE AND WHITE RETRO-REFLECTIVE STRIPES (SLOPING DOWNWARD AT AN ANGLE OF 45 DEGREES IN THE DIRECTION TRAFFIC IS TO PASS). THE STRIPES SHALL BE 150 mm (6") WIDE, EXCEPT WHERE RAIL LENGTHS ARE LESS THAN 900 mm (36"), WHEN 100 mm (4") WIDE STRIPES MAY BE USED.
3. WHERE A BARRICADE EXTENDS ENTIRELY ACROSS A ROADWAY, THE SURFACE STRIPES SHOULD SLOPE DOWNWARD IN THE DIRECTION TOWARD WHICH TRAFFIC MUST TURN. WHERE BOTH RIGHT AND LEFT TURNS ARE PROVIDED, THE STRIPES MAY SLOPE DOWN-WARD IN BOTH DIRECTIONS FROM THE CENTER OF THE BARRICADE OR BARRICADES. WHERE NO TURNS ARE INTENDED, THE STRIPES SHOULD SLOPE DOWNWARD TOWARD THE CENTER OF THE BARRICADE OR BARRICADES.
4. BARRICADE RAILS SHOULD BE SUPPORTED IN A MANNER THAT WILL ALLOW THEM TO BE SEEN BY THE MOTORIST AND PROVIDE A STABLE SUPPORT NOT EASILY BLOWN OVER BY THE WIND OR TRAFFIC. FOR TYPE I BARRICADES, THE SUPPORT MAY INCLUDE OTHER UNSTRIPED HORIZONTAL PANELS NECESSARY TO PROVIDE STABILITY.
5. BARRICADES ARE LOCATED ADJACENT TO TRAFFIC AND ARE THEREFORE SUBJECT TO IMPACT WITH ERRANT VEHICLES. BECAUSE OF THEIR VULNERABLE POSITION AND THE HAZARD THEY COULD CREATE, THEY SHOULD BE CONSTRUCTED OF LIGHTWEIGHT MATERIALS AND HAVE NO RIGID STAY BRACING FOR A-FRAME DESIGNS. ALL BARRICADE SYSTEMS SHOULD BE CRASHWORTHY.
6. ON HIGH-SPEED EXPRESSWAYS OR IN OTHER SITUATION WHERE BARRICADES MAY BE SUSCEPTIBLE TO OVERTURING IN THE WIND, SANDBAGS SHOULD BE USED FOR BALLASTING. SANDBAGS MAY BE PLACED ON PARTS OF THE FRAME OR STAYS TO PROVIDE THE REQUIRED BALLAST BUT SHALL NOT BE PLACED ON TOP OF ANY STRIPED RAIL. BARRICADES SHALL NOT BE BALLASTED BY HEAVY OBJECTS SUCH AS ROCKS OR CHUNKS OF CONCRETE.

CITY OF AUSTIN DEPARTMENT OF PUBLIC WORKS		BARRICADES	
RECORD COPY SIGNED BY SAM ANGOORI	01/04/10 ADOPTED	THE ARCHITECT/ENGINEER ASSUMES RESPONSIBILITY FOR APPROPRIATE USE OF THIS STANDARD.	STANDARD NO. 804S-5 4 OF 13

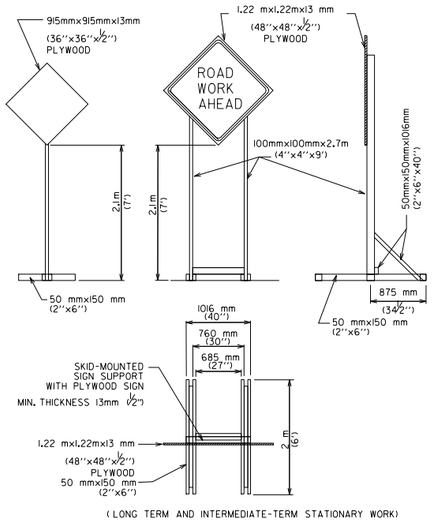

(LONG TERM AND INTERMEDIATE-TERM STATIONARY WORK)

TEMPORARY SIGN SUPPORT

SEE STANDARD 804S-5
SHEET 12 OF 13 AND SHEET 13 OF 13
FOR GENERAL NOTES AND DEVICE SPACING.

CITY OF AUSTIN DEPARTMENT OF PUBLIC WORKS		TRAFFIC CONTROL SIGNS	
RECORD COPY SIGNED BY SAM ANGOORI	01/04/10 ADOPTED	THE ARCHITECT/ENGINEER ASSUMES RESPONSIBILITY FOR APPROPRIATE USE OF THIS STANDARD.	STANDARD NO. 804S-5 5 OF 13

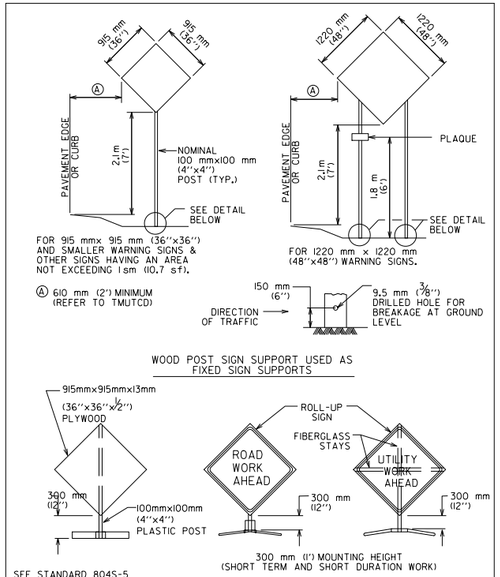

WOOD POST SIGN SUPPORT USED AS FIXED SIGN SUPPORTS

PORTABLE SIGN SUPPORT

SEE STANDARD 804S-5
SHEET 12 OF 13 AND
SHEET 13 OF 13 FOR
GENERAL NOTES AND DEVICE SPACING.

CITY OF AUSTIN DEPARTMENT OF PUBLIC WORKS		TRAFFIC CONTROL SIGNS	
RECORD COPY SIGNED BY SAM ANGOORI	01/04/10 ADOPTED	THE ARCHITECT/ENGINEER ASSUMES RESPONSIBILITY FOR APPROPRIATE USE OF THIS STANDARD.	STANDARD NO. 804S-5 6 OF 13

1. WARNING SIGNS SHALL BE ORANGE. FLUORESCENT RED-ORANGE OR FLUORESCENT YELLOW-ORANGE IN COLOR. THE FLUORESCENT VERSIONS OF ORANGE PROVIDE HIGHER CONSPICUITY THAN STANDARD ORANGE, ESPECIALLY DURING TWILIGHT. ALL SIGNS USED AT NIGHT SHALL BE EITHER RETRORE-FLECTIVE, WITH A MATERIAL THAT HAS A SMOOTH, SEALED OUTER SURFACE, OR ILLUMINATED TO SHOW SIMILAR SHAPE AND COLOR BOTH DAY AND NIGHT. SIGN ILLUMINATION MAY BE EITHER IN-TERNAL OR EXTERNAL. ROADWAY LIGHTING DOES NOT MEET THE REQUIREMENTS FOR SIGN ILLUMINATION.
2. TYPE A FLASHING WARNING LIGHTS MAY BE USED IN CONJUNCTION WITH SIGNS AT NIGHT. STANDARD ORANGE FLAGS MAY BE USED FOR DAY TIME OPERATIONS. HOWEVER, NEITHER LIGHTS NOR FLAGS MAY BLOCK THE SIGN LEGEND.
3. SIGNS SHOULD BE LOCATED ON THE RIGHT-HAND SIDE OF THE ROADWAY. WHEN SPECIAL EMPHASIS IS NEEDED, SIGNS MAY BE PLACE ON BOTH THE LEFT AND RIGHT SIDES OF ROADWAY. SIGNS SHALL BE PLACED ON BOTH THE LEFT AND RIGHT SIDES OF ONE-WAY OR DIVIDED ROADWAYS. SIGNS USED FOR LONG-TERM STATIONARY AND INTERMEDIATE-TERM STATIONARY WORK SHALL BE MOUNTED AT A HEIGHT OF AT LEAST 2.1m (7'), MEASURED FROM THE BOTTOM OF THE SIGN. THE HEIGHT TO THE BOTTOM OF A SECONDARY SIGN MOUNTED BELOW ANOTHER SIGN MAY BE 0.3 m (1') LESS THAN THE APPROPRIATE HEIGHT ABOVE.
4. SIGNS MAY BE MOUNTED ON PORTABLE SUPPORTS FOR SHORT-TERM, SHORT DURATION, MOBILE CON-DITIONS AND EMERGENCIES. SIGNS MOUNTED ON PORTABLE SUPPORTS SHALL BE AT A HEIGHT OF AT LEAST 0.3 m (1'), MEASURED FROM THE BOTTOM OF THE SIGN.
5. ALL SIGN SYSTEMS SHOULD BE CRASHWORTHY. NO SIGN MOUNTS SHALL BLOCK OR IMPEDE SIDEALKS UNLESS NO OTHER OPTION IS AVAILABLE. ONLY SANDBAGS SHOULD BE USED FOR BALLASTING SIGN MOUNTS.

TABLE VI-3 TYPICAL CONSTRUCTION WARNING SIGN SIZE AND SPACING

Roadway Classification	Posted Speed	Sign Spacing ★	Long-term Stationary or Intermediate-term Stationary Approaching Warning Signs CW20 Series and CW22-1 Sign.		Short-term Stationary or Short Duration Approach Warning Signs CW22 Series		Other Warning Signs
			Standard	Minimum ♣	Standard	Minimum ♣	Standard
Conven.	KPH (MPH)	meter (feet)	mm (inches)	mm (inches)	mm (inches)	mm (inches)	mm (inches)
	50 (30)	40 (120)	1220x1220 (48x48)	915x915 (36x36)			
	55 (35)	50 (160)			915x915 (36x36)		915x915 (36x36)
	65 (40)	75 (240)					
	70 (45)	100 (320)		Use Standard Size		Use Standard Size	
	80 (50)	120 (400)					
	90 (55)	150 (500) 2					
	100 (60)	180 (600) 2			1220x1220 (48x48)		1220x1220 (48x48)
	105 (65)	210 (700) 2					
	115 (70)	240 (800) 2					
Exp. or Fwy	★★	★★ 3			★★★	★★★	★★★

♣ MINIMUM DISTANCE FROM WORK TO 1st ADVANCE WARNING SIGN AND/OR DISTANCE BETWEEN EACH ADDITIONAL SIGN.
★★ FOR TYPICAL SIGN SPACINGS ON EXPRESSWAYS AND FREEWAYS, REFER TO THE CURRENT ADDITION OF TMUTCD.
★★★ SMALLER SIGN SIZES MAY BE USED WHERE SIGN DESIGNS HAVE NOT BEEN INCLUDED IN THE "STANDARD HIGHWAY SIGNS DESIGN MANUAL".

1. SPECIAL OR LARGER SIZE SIGNS MAY BE USED AS NECESSARY.
2. DISTANCE BETWEEN SIGNS SHOULD BE INCREASED AS REQUIRED TO HAVE 450 m (1500') OR MORE ADVANCE WARNING.
3. DISTANCE BETWEEN SIGNS SHOULD BE INCREASED AS REQUIRED TO HAVE A 0.8 km (½ MILE) OR MORE ADVANCE WARNING.
4. FOR USE ONLY ON SECONDARY ROADS OR CITY STREETS WHERE SPEEDS ARE LOW.

CITY OF AUSTIN DEPARTMENT OF PUBLIC WORKS		TRAFFIC CONTROL SIGNS	
RECORD COPY SIGNED BY SAM ANGOORI	01/04/10 ADOPTED	THE ARCHITECT/ENGINEER ASSUMES RESPONSIBILITY FOR APPROPRIATE USE OF THIS STANDARD.	STANDARD NO. 804S-5 7 OF 13

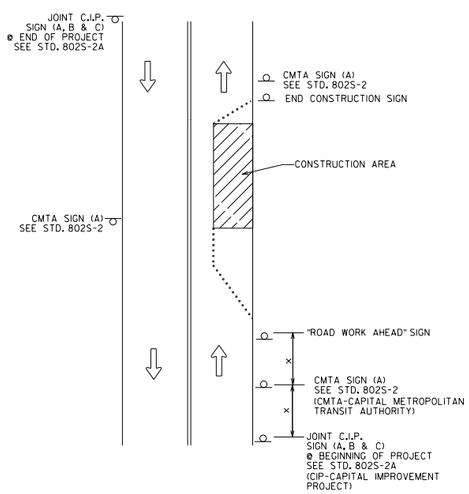

NOTES:

1. OTHER REQUIRED SIGNS NOT SHOWN FOR CLARITY.
2. "X" DISTANCES SAME AS STANDARD TABLE SHOWN ON SHEET 13 OF 13.

SEE STANDARD 804S-5
SHEET 12 OF 13 AND SHEET 13 OF 13
FOR GENERAL NOTES AND DEVICE SPACING.

CITY OF AUSTIN DEPARTMENT OF PUBLIC WORKS		TYPICAL CMTA/C.I.P. SIGN LOCATIONS	
RECORD COPY SIGNED BY SAM ANGOORI	01/04/10 ADOPTED	THE ARCHITECT/ENGINEER ASSUMES RESPONSIBILITY FOR APPROPRIATE USE OF THIS STANDARD.	STANDARD NO. 804S-5 8 OF 13

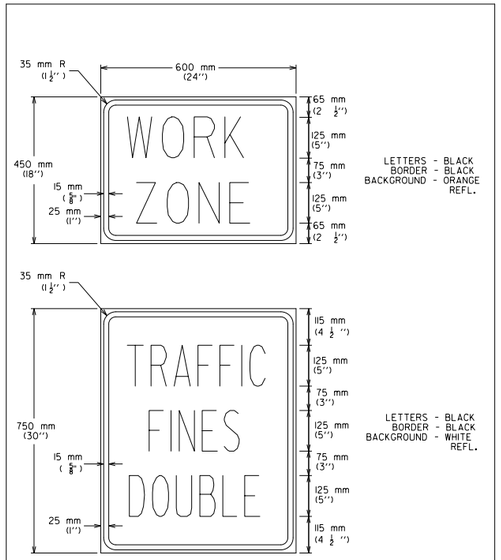

SEE STANDARD DETAIL 804S-5
SHEET 5 OF 13 FOR SKID-
MOUNTED SIGN SUPPORT.

CITY OF AUSTIN DEPARTMENT OF PUBLIC WORKS		SPECIAL WORK ZONE SIGNS	
RECORD COPY SIGNED BY SAM ANGOORI	01/04/10 ADOPTED	THE ARCHITECT/ENGINEER ASSUMES RESPONSIBILITY FOR APPROPRIATE USE OF THIS STANDARD.	STANDARD NO. 804S-5 9 OF 13

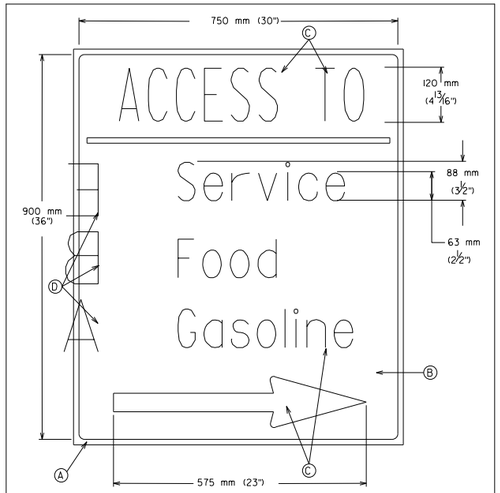

Ⓐ 50 mm (½") WHITE RETROREFLECTIVE BORDER
Ⓑ BLUE RETROFEFLECTIVE BACKGROUND
Ⓒ WHITE RETROREFLECTIVE ARROW AND LETTERS
Ⓓ WHITE RETROREFELCTIVE BUSINESS LOGO

NOTES:

1. CONTRACTORS CAN MAKE BUSINESS NAMES REMOVABLE/CHANGEABLE AS AN OPTION.
2. BUSINESS LOGO ARE OPTIONAL. IF USED LETTERING MUST BE MINIMIZED.

CITY OF AUSTIN DEPARTMENT OF PUBLIC WORKS		SPECIAL WORK ZONE SIGNS	
RECORD COPY SIGNED BY SAM ANGOORI	01/04/10 ADOPTED	THE ARCHITECT/ENGINEER ASSUMES RESPONSIBILITY FOR APPROPRIATE USE OF THIS STANDARD.	STANDARD NO. 804S-5 10 OF 13

NUMBER	DATE	REVISION	APPROVED

CEDAR PARK

Binkley & Barfield, Inc
consulting engineers
Texas Registration Number F-257

ANDERSON MILL ROAD
GASPAR BEND TO WHITESTONE BLVD
STANDARD DETAILS TRAFFIC CONTROL

DESIGN BY:	GCC	SCALE: N/A
DRAWN BY:	DSH	
CHECKED BY:	DRE	
APPROVED BY:	BDR	SHEET:
PROJECT NO:	156402	
DATE:	10/6/2016	PAGE: 217

10/6/2016
8:50:49 AM
...\CADD\SHEETS\TCSD1*AM*06.dgn

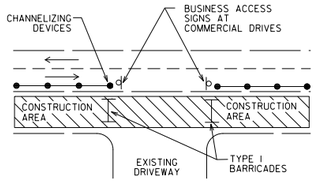

DRIVEWAY ACCESS BARRICADE DETAIL

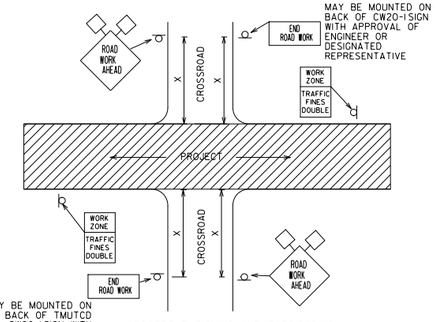

MAY BE MOUNTED ON BACK OF TMUTCD CW20-1SIGN WITH APPROVAL OF ENGINEER OR DESIGNATED REPRESENTATIVE (TMUTCD-TEXAS MANUAL FOR UNIFORM TRAFFIC CONTROL DEVICES)

CROSSROAD SIGNING AND BARRICADING

SEE STANDARD 804S-5 SHEET 12 OF 13 AND SHEET 13 OF 13 FOR GENERAL NOTES AND DEVICE SPACING.

CITY OF AUSTIN DEPARTMENT OF PUBLIC WORKS		SIGNING AND BARRICADING CROSSROAD & DRIVEWAY	STANDARD NO. 804S-5 11 OF 13
RECORD COPY SIGNED BY SAM ANGOORI	01/04/10 ADOPTED	THE ARCHITECT/ENGINEER ASSUMES RESPONSIBILITY FOR APPROPRIATE USE OF THIS STANDARD.	

1. ALL TRAFFIC CONTROL DEVICES, SIGNS, BARRICADES AND WARNING SIGNS SHALL BE FURNISHED, PLACED, CONSTRUCTED AND MAINTAINED IN THE APPROPRIATE TYPES AND SIZES AND FLAGGER OPERATIONS EXECUTED IN ACCORDANCE WITH THE CURRENT EDITION OF THE TEXAS MANUAL ON UNIFORM CONTROL DEVICES (TMUTCD), THE CITY OF AUSTIN STANDARD SPECIFICATIONS SERIES 800 AND THE CITY OF AUSTIN TRANSPORTATION CRITERIA MANUAL, OR AS DIRECTED BY THE ENGINEER OR DESIGNATED REPRESENTATIVE. IF A CONFLICT ARISES THEN THE CITY OF AUSTIN TRANSPORTATION CRITERIA MANUAL SHALL CONTROL UNLESS OTHERWISE INSTRUCTED BY THE ENGINEER OR DESIGNATED REPRESENTATIVE.
2. THE CONTRACTOR SHALL NOTIFY THE TRANSPORTATION DIVISION OF THE DEPARTMENT OF PUBLIC WORKS AT 974-7024 NO LATER THAN THE MONDAY OF THE WEEK DURING WHICH THE CONTRACTOR INTENDS TO SET UP BARRICADES TO START CONSTRUCTION.
3. PROPOSED CONSTRUCTION TRAFFIC MOVEMENTS MAY REQUIRE EXISTING SIGNAL HEADS TO BE RELOCATED. THE CITY OF AUSTIN WILL REVIEW SIGNAL HEAD LOCATIONS DURING CONSTRUCTION AND PERFORM THE REQUIRED ADJUSTMENTS. THE CONTRACTOR SHALL CONTACT THE TRANSPORTATION DIVISION OF THE DEPARTMENT OF PUBLIC WORKS AT 974-7024, THREE (3) DAYS PRIOR TO PLACMENT ANY TRAFFIC CONTROLS WHICH MAY REQUIRE SIGNAL HEAD ADJUSTMENTS/RELOCATION.
4. THE CONTRACTOR SHALL PROVIDE ONE (1) FULL-TIME OFF-DUTY, UNIFORMED AUSTIN POLICE DEPARTMENT CERTIFIED PEACE OFFICER AND ONE (1) VEHICLE OF THE TYPE APPROVED BY THE ENGINEER OR DESIGNATED REPRESENTATIVE FOR TEMPORARY LANE CLOSURES WHEN UNDERSEALING, MILLING, PAVING AND WHEN WORKING IN INTERSECTIONS AS PART OF THE TRAFFIC CONTROL OPERATIONS. THE PEACE OFFICER SHALL BE ABLE TO SHOW PROOF OF CERTIFICATION BY THE TEXAS COMMISSION ON LAW ENFORCEMENT OFFICER STANDARDS.
5. THE CONTRACTOR SHALL NOTIFY ALL OTHER GOVERNMENTAL AGENCIES WHOSE RIGHTS-OF-WAY ARE AFFECTED BY HIS WORK ACTIVITIES. THE CONTRACTOR SHALL PROVIDE ANY ADDITIONAL TRAFFIC CONTROL DEVICES THAT THEY MAY NEED.
6. THE CONTRACTOR SHALL MAINTAIN ONE (1) DUST-FREE LANE OF TRAFFIC IN EACH DIRECTION AT ALL TIMES, UNLESS OTHERWISE NOTED IN THE DRAWINGS OR APPROVED THE ENGINEER OR DESIGNATED REPRESENTATIVE.
7. THERE SHALL BE A MINIMUM OF THREE (3) METERS (10 FEET) CLEAR WIDTH FOR EACH LANE OF TRAFFIC IN CHANNELIZED AREAS, UNLESS OTHERWISE NOTED ON THE DRAWINGS OR APPROVED BY THE ENGINEER OR DESIGNATED REPRESENTATIVE.
8. THE CONTRACTOR SHALL MAINTAIN DRIVEWAY ACCESS AT ALL TIMES. IF ACCESS CANNOT BE MAINTAINED, THE CONTRACTOR WITH THE APPROVAL OF THE ENGINEER OR DESIGNATED REPRESENTATIVE SHALL PROVIDE AT LEAST 24 HOUR WRITTEN NOTICE OF LIMITED ACCESS TO AFFECTED PROPERTY OWNERS. THE CONTRACTOR SHALL PROVIDE BUSINESS ACCESS SIGNS AS NEEDED TO NFORM DRIVERS OF THE LOCATIONS OF ALL DRIVEWAYS.
9. TEMPORARY LANE CLOSURES IN THE CENTRAL BUSINESS DISTRICT (CBD) OR ON ARTERIAL STREETS SHALL NOT BE PERMITTED DURING THE HOURS OF 7 AM TO 9 AM AND 4 PM TO 6PM MONDAY THROUGH FRIDAY UNLESS PRIOR APPROVAL HAS BEEN OBTAINED FROM THE TRANSPORTATION DIVISION.
10. TRAFFIC CONTROL SHOWN ON STANDARD DETAILS IS TYPICAL. ADDITIONAL SIGNING AND/OR BARRICADING, AS WELL AS TEMPORARY PAVEMENT MARKINGS AND OBLITERATION/RESTORATION OF EXISTING PAVEMENT MARKINGS, MAY BE REQUIRED DEPENDING ON FIELD CONDITIONS. FIELD ADJUSTMENTS TO TRAFFIC CONTROLS WILL NOT BE PAID FOR DIRECTLY, BUT WILL BE CONSIDERED SUBSIDIARY TO ITEM NO. 8035 "BARRICADES, SIGNS AND TRAFFIC HANDLING".
11. THE CONTRACTOR SHALL DESIGNATE A COMPETENT PERSON FOR TRAFFIC CONTROL. THE COMPETENT PERSON SHALL MAKE INSPECTIONS OF THE TRAFFIC CONTROL DEVICES AT LEAST TWO (2) TIMES A DAY (ONCE AT THE BEGINNING OF THE DAY AND ONCE AT THE END OF THE DAY), INCLUDING NON-WORKING DAYS, ENSURING THAT ALL DEVICES ARE IN THEIR PROPER PLACE AND ARE IN WORKING ORDER.
12. ALL DEVICES SHALL BE MADE USING MATERIALS LISTED ON THE TxDOT APPROVED PRODUCTS LIST.

CITY OF AUSTIN DEPARTMENT OF PUBLIC WORKS		GENERAL TRAFFIC CONTROL NOTES	STANDARD NO. 804S-5 12 OF 13
RECORD COPY SIGNED BY SAM ANGOORI	01/04/10 ADOPTED	THE ARCHITECT/ENGINEER ASSUMES RESPONSIBILITY FOR APPROPRIATE USE OF THIS STANDARD.	

13. ALL PERSONS WORKING WITHIN THE RIGHT-OF-WAY SHALL WEAR A BRIGHTLY COLORED SAFETY VEST. FOR NIGHTTIME WORK THE VEST SHALL BE RETROREFLECTIVE.
14. WHEN AN INTERSECTION IS CLOSED FOR CONSTRUCTION, THE CONTRACTOR SHALL PROCEED WITH CONSTRUCTION IN SUCH A MANNER THAT THE CLOSURE TIME IS MINIMIZED.
15. THE CONTRACTOR SHALL NOTIFY THE CAPITAL METRO DISPATCHER AT 385-4295 ONE (1) WEEK PRIOR TO LANE CLOSURES ADJACENT TO BUS STOPS.

DURATION OF WORK

WORK DURATION IS A MAJOR FACTOR IN DETERMINING THE NUMBER AND TYPES OF DEVICES USED IN TEMPORARY TRAFFIC ZONES. THE FIVE (5) CATEGORIES OF WORK DURATION AND THEIR TIME AT A LOCATION ARE AS FOLLOWS:

- LONG-TERM STATIONARY-WORK THAT OCCUPIES A LOCATION FOR MORE THAN 3 DAYS.
- INTERMEDIATE-TERM STATIONARY-WORK THAT OCCUPIES A LOCATION FROM OVERNIGHT TO 3 DAYS.
- SHORT-TERM STATIONARY-DAYTIME WORK THAT OCCUPIES A LOCATION FROM 1 TO 12 HOURS.
- SHORT-DURATION WORK THAT OCCUPIES A LOCATION UP TO 1HOUR.
- MOBILE-WORK THAT MOVES INTERMITTENTLY OR CONTINUOUSLY.

Typical Transition Lengths and Suggested Maximum Spacing of Devices

		Minimum Desirable Taper Lengths (L) Meters (Feet)			Suggested Max. Device Spacing		Suggested Sign Spacing Meters (Feet)
Posted Speed KPH (MPH)	Formula	3.0(10) Offset Meters (feet)	3.3(11) Offset Meters (feet)	3.6(12) Offset Meters (feet)	On a taper Meters (feet)	On a tangent Meters (feet)	"X" Dimension
50 (30)	$L=\frac{WS^2}{60}$	45 (150)	50 (165)	55 (180)	9 (30)	15-20 (60-75)	40 (120)
55 (35)		65 (205)	70 (225)	75 (245)	10 (35)	25-25 (70-90)	50 (160)
65 (40)		80 (265)	90 (295)	100 (320)	12 (40)	25-30 (80-100)	75 (240)
70 (45)	L=WS	135 (450)	(495)	165 (540)	13 (45)	25-30 (90-110)	100 (320)
80 (50)		150 (500)	165 (550)	180 (600)	15 (50)	30-35 (100-125)	120 (400)
90 (55)		165 (550)	185 (605)	200 (660)	16 (55)	35-40 (110-140)	150 (500)
100 (60)		180 (600)	200 (660)	220 (720)	18 (60)	40-45 (120-150)	180 (600)
105 (65)		195 (650)	215 (715)	235 (780)	19 (65)	40-50 (130-165)	210 (700)
115 (70)		215 (700)	235 (770)	255 (840)	21 (70)	45-55 (140-175)	240 (800)

CITY OF AUSTIN DEPARTMENT OF PUBLIC WORKS		GENERAL TRAFFIC CONTROL NOTES	STANDARD NO. 804S-5 13 OF 13
RECORD COPY SIGNED BY SAM ANGOORI	01/04/10 ADOPTED	THE ARCHITECT/ENGINEER ASSUMES RESPONSIBILITY FOR APPROPRIATE USE OF THIS STANDARD.	

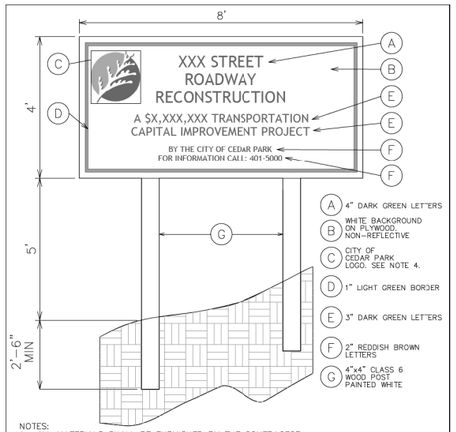

NOTES:
1. ALL MATERIALS SHALL BE FURNISHED BY THE CONTRACTOR.
2. IF SIGN IS USED IN PHASED CONSTRUCTION, POSTS SHALL BE MOUNTED ON SKIDS.
3. LETTERING SHALL BE CENTERED OF FONT TREBUCHET.
4. CITY OF CEDAR PARK LOGO GRAPHICS WILL BE PROVIDED TO CONTRACTOR IN ELECTRONIC FORMAT. IF LOGO WILL NOT FIT ON MAIN SIGN. CEDAR PARK LOGO CAN BE MOUNTED ON A SMALLER SIGN BELOW MAIN SIGN.
5. CONTRACTOR SHALL PROVIDE A DIGITAL PROOF OF SIGN TO BE REVIEWED AND APPROVED BY THE CITY OF CEDAR PARK ENGINEERING DEPARTMENT PRIOR TO MANUFACTURE.

PAINT REQUIREMENTS:
1. BACKGROUND AND POST (BLUE TONED WHITE 93-21667 CROSS ALLEN OR EQUAL).
2. DARK GREEN: PMS 364C, PMS 363U, OR PMS 289-1 (70C, 0M, 100Y, 40K)
3. LIGHT GREEN: PMS 383C, PMS 390U, OR PMS 304-3 (25C, 0M, 95Y, 20K)
4. REDDISH BROWN: PMS 7517C, PMS 7526U, OR PMS 52-1 (0C, 70M, 100Y, 40K)

CITY OF CEDAR PARK	CAPITAL IMPROVEMENT PROJECT SIGN	
ISSUED: NOVEMBER 28, 2012 SCALE: NOT TO SCALE	THE ENGINEER ASSUMES RESPONSIBILITY FOR APPROPRIATE USE OF TICS STANDARD.	

NUMBER	DATE	REVISION	APPROVED

CEDAR PARK

Binkley & Barfield, Inc
consulting engineers
Texas Registration Number F-257

ANDERSON MILL ROAD
GASPAR BEND TO WHITESTONE BLVD
STANDARD DETAILS TRAFFIC CONTROL

DESIGN BY: GCC DRAWN BY: DSH CHECKED BY: DRE APPROVED BY: BDR PROJECT NO: 156402 DATE: 10/6/2016	SCALE: N/A SHEET: PAGE: 218	

10/6/2016
8:50:50 AM
...\CADD\SHEETS\TCSD1*AM*07.dgn

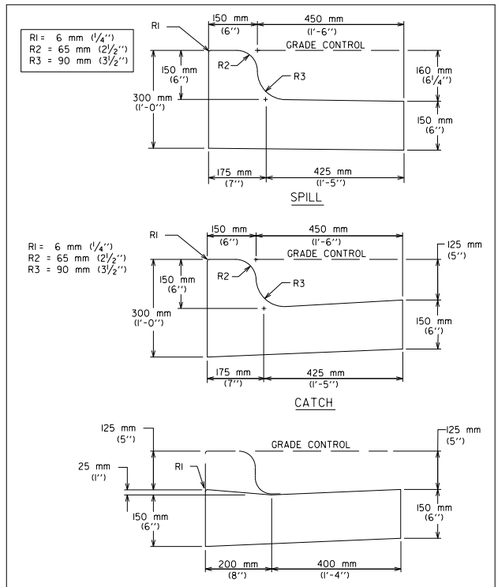

CITY OF AUSTIN DEPARTMENT OF PUBLIC WORKS		CURB AND GUTTER SECTION	
RECORD COPY SIGNED BY LINO RIVERA	9/29/99 ADOPTED	THE ARCHITECT/ENGINEER ASSUMES RESPONSIBILITY FOR APPROPRIATE USE OF THIS STANDARD.	STANDARD NO. 430S-1

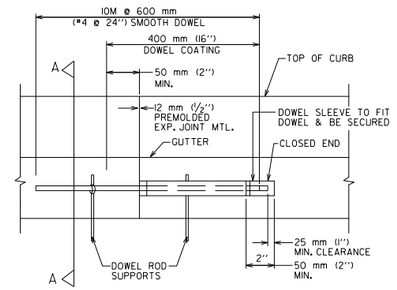

CURB EXPANSION JOINT DOWEL DETAIL

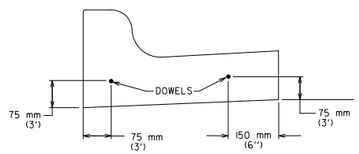

SECTION A-A

SEE STANDARD 430S-1 FOR TYPICAL CURB AND GUTTER SECTIONS.

CITY OF AUSTIN DEPARTMENT OF PUBLIC WORKS		CURB EXPANSION JOINT DOWEL DETAIL	
RECORD COPY SIGNED BY LINO RIVERA	9/29/99 ADOPTED	THE ARCHITECT/ENGINEER ASSUMES RESPONSIBILITY FOR APPROPRIATE USE OF THIS STANDARD.	STANDARD NO. 430S-3

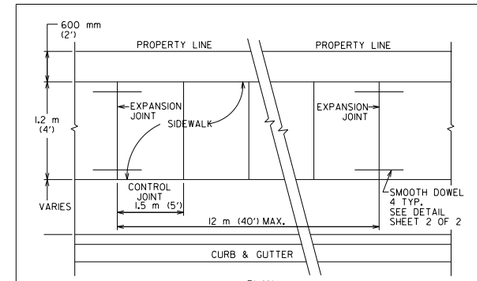

PLAN

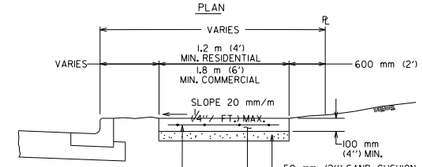

POLYPROPYLENE FIBRILLATED FIBERS, OR 150 mm X 150 mm X MW9 X MW9 (6" X 6" X W1.4 X W1.4) WELDED WIRE FABRIC OR ONE LAYER 10M (#3) BARS PLACED NOT MORE THAN 450 mm (18") C.C. BOTH DIRECTIONS.
REINFORCEMENT SHALL ACCURATELY PLACED AT SLAB MID-DEPTH AND HELD FIRMLY IN PLACE BY MEANS OF BAR SUPPORTS OF ADEQUATE STRENGTH AND NUMBER THAT WILL PREVENT DISPLACEMENT AND KEEP THE STEEL AT ITS PROPER POSITION DURING THE PLACEMENT OF THE P.C. CONCRETE. IN NO INSTANCE SHALL THE STEEL BE PLACED DIRECTLY ON THE SUBGRADE OR SAND CUSHION LAYER.

SECTION

CITY OF AUSTIN DEPARTMENT OF PUBLIC WORKS		SIDEWALK	
RECORD COPY SIGNED BY BILL GARDNER	03/26/08 ADOPTED	THE ARCHITECT/ENGINEER ASSUMES RESPONSIBILITY FOR APPROPRIATE USE OF THIS STANDARD.	STANDARD NO. 432S-1 1 OF 3

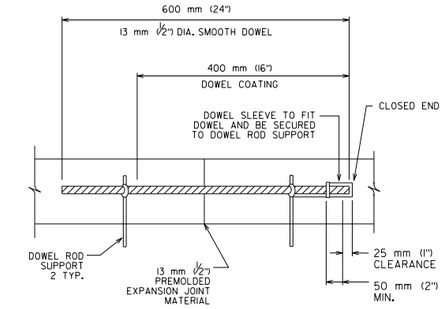

DOWEL DETAIL

CITY OF AUSTIN DEPARTMENT OF PUBLIC WORKS		SIDEWALK	
RECORD COPY SIGNED BY BILL GARDNER	03/26/08 ADOPTED	THE ARCHITECT/ENGINEER ASSUMES RESPONSIBILITY FOR APPROPRIATE USE OF THIS STANDARD.	STANDARD NO. 432S-1 2 OF 3

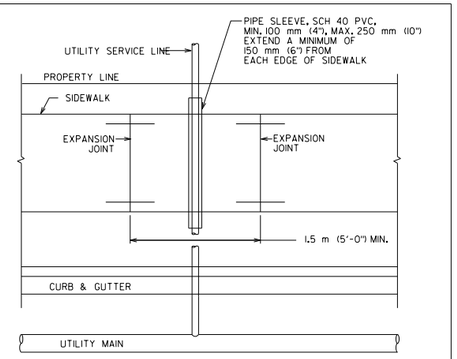

SIDEWALK OVER UTILITY SERVICE LINE PLAN

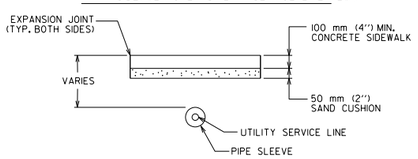

SECTION OF SIDEWALK OVER UTILITY SERVICE LINES

NOTES:
1. THIS STANDARD APPLIES TO THE INSTALLATION OF NEW UTILITIES OR UTILITIES BEING REPLACED BY A NEW LINE.
2. NO JOINTS IN UTILITY SERVICE PIPE TO BE LOCATED INSIDE PVC PIPE SLEEVE.

CITY OF AUSTIN DEPARTMENT OF PUBLIC WORKS		SIDEWALK	
RECORD COPY SIGNED BY BILL GARDNER	03/26/08 ADOPTED	THE ARCHITECT/ENGINEER ASSUMES RESPONSIBILITY FOR APPROPRIATE USE OF THIS STANDARD.	STANDARD NO. 432S-1 3 OF 3

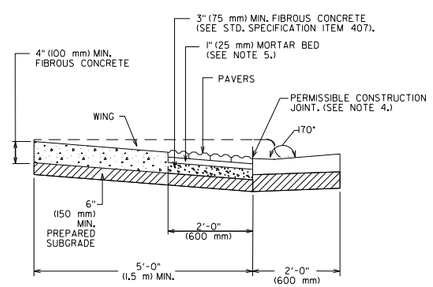

CROSS SECTION

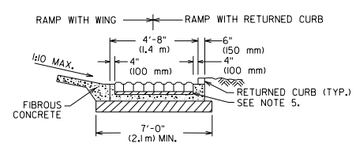

FRONT END VIEW

CITY OF AUSTIN DEPARTMENT OF PUBLIC WORKS		DETECTABLE WARNING-PAVER (CITY PROPERTY/EASEMENTS)	
RECORD COPY SIGNED BY BILL GARDNER	06/21/07 ADOPTED	THE ARCHITECT/ENGINEER ASSUMES RESPONSIBILITY FOR APPROPRIATE USE OF THIS STANDARD.	STANDARD NO. 432S-2A 1 OF 2

GENERAL NOTES:

1. THIS STANDARD IS APPLICABLE FOR RAMP CONSTRUCTION ON CITY PROPERTY AND EASEMENT AREAS ONLY.
2. PAVERS ARE REQUIRED FOR ALL CURB RAMP INSTALLATIONS.
3. PAVERS WILL HAVE DETECTABLE WARNING THAT CONSISTS OF RAISED TRUNCATED DOMES WITH A DIAMETER OF 0.9" (23 mm), A NOMINAL HEIGHT OF 0.2" (5 mm) AND A NOMINAL CENTER TO CENTER SPACING OF 2.35" (60 mm) AND SHALL CONSTRAST VISUALLY WITH ADJOINING SURFACES. EITHER LIGHT-ON-DARK OR DARK-ON-LIGHT (Re: ADAAG SECTION 4.29.2). MATERIAL USED TO PROVIDE CONTRAST SHALL BE AN INTEGRAL PART OF THE WALKING SURFACE. PAVER PATTERN SHALL BE BASKET WEAVE UNLESS DIRECTED OTHERWISE BY THE ENGINEER OR DESIGNATED REPRESENTATIVE.
4. TYPICAL SIDEWALK WIDTHS AND CURB RADII ARE SHOWN FOR ILLUSTRATION ONLY. REFER TO THE TRANSPORTATION CRITERIA MANUAL FOR SIDEWALK WIDTHS, CURB RADII AND CURB BASIS.
5. THE PERMISSIBLE CONSTRUCTION JOINT BETWEEN THE PAVERS AND THE ADJOINING SURFACE SHALL BE LIMITED TO 1/4" (6 mm) JOINT SIZE. GAPS LARGER THAN 1/4" (6 mm) MUST BE APPROVED BY THE ENGINEER OR DESIGNATED REPRESENTATIVE. ALL JOINTS BETWEEN BRICKS AND ADJOINING SURFACE SHALL BE MORTAR FILLED UNLESS DIRECTED OTHERWISE BY THE ENGINEER OR DESIGNATED REPRESENTATIVE.
6. MORTAR SHALL CONFORM TO STD. SPECIFICATION ITEM SECTION 403S.3.5. MORTAR AND GROUT. ALL OTHER CONCRETE SHALL CONFORM TO STD. SPECIFICATION ITEM 403S. CONCRETE FOR STRUCTURES, UNLESS OTHERWISE NOTED.
7. CURB RAMPS WITH RETURNED CURB MAY ONLY BE USED WHERE PEDESTRIANS WOULD NOT NORMALLY WALK DIAGONALLY ACROSS THE RAMP.

CITY OF AUSTIN DEPARTMENT OF PUBLIC WORKS		DETECTABLE WARNING-PAVER (CITY PROPERTY/EASMENTS)	
RECORD COPY SIGNED BY BILL GARDNER	06/21/07 ADOPTED	THE ARCHITECT/ENGINEER ASSUMES RESPONSIBILITY FOR APPROPRIATE USE OF THIS STANDARD.	STANDARD NO. 432S-2A 2 OF 2

NUMBER	DATE	REVISION	APPROVED

CEDAR PARK

Binkley & Barfield, Inc
consulting engineers
Texas Registration Number F-257

ANDERSON MILL ROAD
GASPAR BEND TO WHITESTONE BLVD
STANDARD DETAILS ROADWAY

DESIGN BY:	GCC	SCALE: N/A
DRAWN BY:	DSH	
CHECKED BY:	DRE	
APPROVED BY:	BDR	SHEET:
PROJECT NO:	156402	
DATE:	10/6/2016	PAGE: 219

10/6/2016
8:50:51 AM
...\CADD\SHEETS\RDSD1*AM*01.dgn

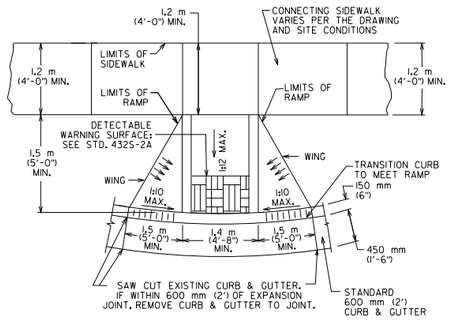

CITY OF AUSTIN DEPARTMENT OF PUBLIC WORKS		TYPE I SIDEWALK CURB RAMP	
RECORD COPY SIGNED BY BILL GARDNER	9/14/05 ADOPTED	THE ARCHITECT/ENGINEER ASSUMES RESPONSIBILITY FOR APPROPRIATE USE OF THIS STANDARD.	STANDARD NO. 432S-5

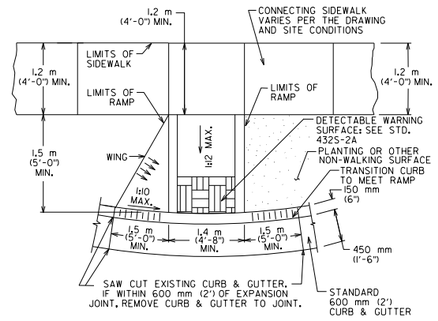

CITY OF AUSTIN DEPARTMENT OF PUBLIC WORKS		TYPE IA SIDEWALK CURB RAMP WITH LEFT FLARE	
RECORD COPY SIGNED BY BILL GARDNER	06/16/08 ADOPTED	THE ARCHITECT/ENGINEER ASSUMES RESPONSIBILITY FOR APPROPRIATE USE OF THIS STANDARD.	STANDARD NO. 432S-5A 1 OF 2

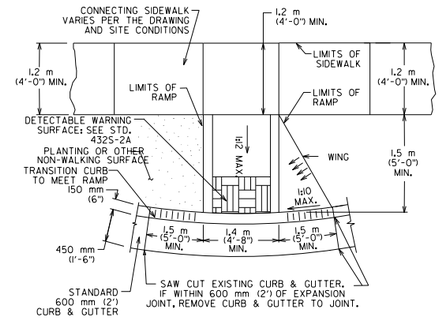

CITY OF AUSTIN DEPARTMENT OF PUBLIC WORKS		TYPE IA SIDEWALK CURB RAMP WITH RIGHT FLARE	
RECORD COPY SIGNED BY BILL GARDNER	06/16/08 ADOPTED	THE ARCHITECT/ENGINEER ASSUMES RESPONSIBILITY FOR APPROPRIATE USE OF THIS STANDARD.	STANDARD NO. 432S-5A 2 OF 2

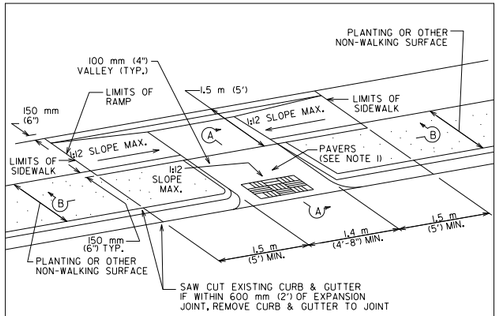

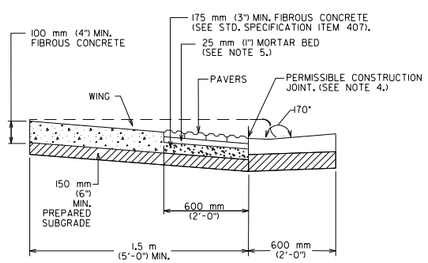

SECTION A-A

CITY OF AUSTIN DEPARTMENT OF PUBLIC WORKS		COMBINED SIDEWALK CURB RAMP WITH PAVERS	
RECORD COPY SIGNED BY BILL GARDNER	03/13/06 ADOPTED	THE ARCHITECT/ENGINEER ASSUMES RESPONSIBILITY FOR APPROPRIATE USE OF THIS STANDARD.	STANDARD NO. 432S-3F 1 OF 2

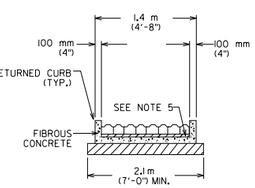

SECTION B-B

GENERAL NOTES:

1. THIS STANDARD IS APPLICABLE FOR RAMP CONSTRUCTION WITHIN RIGHT-OF-WAY OR EASEMENT ONLY.
2. PAVERS WILL HAVE DETECTABLE WARNING THAT CONSISTS OF RAISED TRUNCATED DOMES WITH A DIAMETER OF 23 mm (0.9"), A NOMINAL HEIGHT OF 5 mm (0.2") AND A NOMINAL CENTER TO CENTER SPACING OF 60 mm (2.35") AND SHALL CONTRAST VISUALLY WITH ADJOINING SURFACES, EITHER LIGHT-ON-DARK OR DARK-ON-LIGHT (Re: ADAAG SECTION 4.29.2). MATERIAL USED TO PROVIDE CONTRAST SHALL BE AN INTEGRAL PART OF THE WALKING SURFACE. A BASKET WEAVE PAVER PATTERN SHALL BE USED UNLESS DIRECTED BY THE ENGINEER OR DESIGNATED REPRESENTATIVE. PAVER PATTERN VARIES PER MANUFACTURER'S RECOMMENDATIONS. REFER TO STANDARD DETAIL 432S-5 FOR PAVER BASE PREPARATION DETAILS.
3. THE CURB, GUTTER AND RAMP SYSTEM SHALL BE CONFIGURED TO MAINTAIN ALL RUNOFF FROM A 25 YEAR FREQUENCY STORM WITHIN THE RIGHT-OF-WAY (DRAINAGE CRITERIA MANUAL SECTION 1.2.2.B).
4. TYPICAL SIDEWALK WIDTHS AND CURB RADII ARE SHOWN FOR ILLUSTRATION ONLY. REFER TO THE TRANSPORTATION CRITERIA MANUAL FOR SIDEWALK WIDTHS, CURB RADII AND CURB BASIC REQUIREMENTS.
5. THE PERMISSIBLE CONSTRUCTION JOINT BETWEEN THE PAVERS AND THE ADJOINING SURFACE SHALL BE LIMITED TO 6 mm (1/4") JOINT SIZE. GAPS LARGER THAN 6 mm (1/4") MUST BE APPROVED BY THE ENGINEER OR DESIGNATED REPRESENTATIVE. ALL JOINTS BETWEEN BRICKS AND ADJOINING SURFACE SHALL BE MORTAR FILLED UNLESS DIRECTED OTHERWISE BY THE ENGINEER OR DESIGNATED REPRESENTATIVE.
6. MORTAR SHALL CONFORM TO STD. SPECIFICATION ITEM SECTION 403S.3.5. MORTAR AND GROUT. ALL OTHER CONCRETE SHALL CONFORM TO STD. SPECIFICATION ITEM 403S. CONCRETE FOR STRUCTURES, UNLESS OTHERWISE NOTED.
7. CURB RAMPS WITH 100 mm (4") CONCRETE VALLEY MAY ONLY BE USED WHERE PEDESTRIANS WOULD NOT NORMALLY WALK DIAGONALLY ACROSS THE RAMP.

CITY OF AUSTIN DEPARTMENT OF PUBLIC WORKS		COMBINED SIDEWALK CURB RAMP WITH PAVERS	
RECORD COPY SIGNED BY BILL GARDNER	03/13/06 ADOPTED	THE ARCHITECT/ENGINEER ASSUMES RESPONSIBILITY FOR APPROPRIATE USE OF THIS STANDARD.	STANDARD NO. 432S-3F 2 OF 2

NUMBER	DATE	REVISION	APPROVED

CEDAR PARK

Binkley & Barfield, Inc
consulting engineers
Texas Registration Number F-257

ANDERSON MILL ROAD
GASPAR BEND TO WHITESTONE BLVD
STANDARD DETAILS ROADWAY

DESIGN BY: GCC DRAWN BY: DSH CHECKED BY: DRE APPROVED BY: BDR PROJECT NO: 156402 DATE: 10/6/2016	SCALE: N/A	
	SHEET:	
	PAGE: 220	

10/6/2016
8:50:52 AM
...\CADD\SHEETS\RDSD1*AM*02.dgn

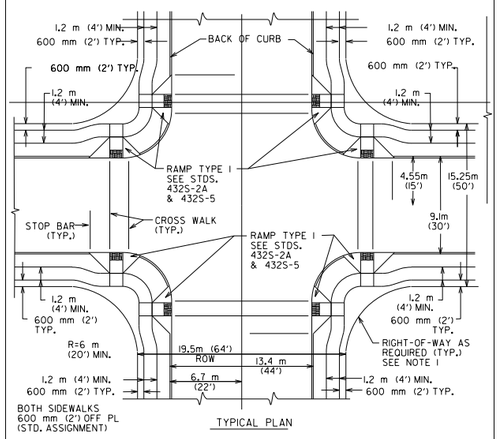

TYPICAL PLAN

CITY OF AUSTIN DEPARTMENT OF PUBLIC WORKS		TYPE I CURB RAMPS-FULL INTERSECTION	
RECORD COPY SIGNED BY BILL GARDNER	03/13/06 ADOPTED	THE ARCHITECT/ENGINEER ASSUMES RESPONSIBILITY FOR APPROPRIATE USE OF THIS STANDARD.	STANDARD NO. 432S-3 1 OF 3

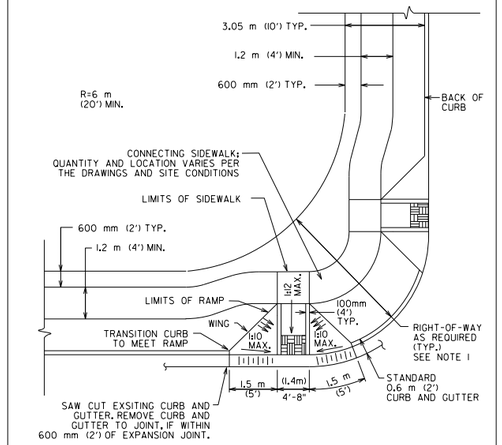

TYPICAL PLAN

CITY OF AUSTIN DEPARTMENT OF PUBLIC WORKS		TYPE I CURB RAMPS-FULL INTERSECTION	
RECORD COPY SIGNED BY BILL GARDNER	03/13/06 ADOPTED	THE ARCHITECT/ENGINEER ASSUMES RESPONSIBILITY FOR APPROPRIATE USE OF THIS STANDARD.	STANDARD NO. 432S-3 2 OF 3

GENERAL NOTES:

1. THIS STANDARD IS APPICABLE FOR RAMP CONSTRUCTION WITHIN RIGHT-OF-WAY OR EASEMENT ONLY.
2. THIS STANDARD REPRESENTS A TYPICAL CURB RAMP DESIGN FOR A NEWLY CONSTRUCTED INTERSECTION WITH A 6 m (20') RADIUS. LARGER RADII, STREET GRADES, LIMITED SIGHT DISTANCES, STREET CLASSIFICATION, SIGNALIZATION AND OTHER FACTORS MAY REQUIRE THE ENGINEER OR DESIGNATED REPRESENTATIVE TO MODIFY THIS STANDARD. SUFFICIENT RIGHT-OF-WAY SHALL BE DEDICATED SUCH THAT THE ENTIRE CURB RAMP, INCLUDING LANDING, AND THE INTER-CONNECTING SIDEWALK ARE CONTAINED WITHIN THE RIGHT-OF-WAY.
3. THE CURB, GUTTER AND RAMP SYSTEM SHALL BE CONFIGURED TO MAINTAIN ALL RUNOFF FROM A 25 YEAR FREQUENCY STORM WITHIN THE RIGHT-OF-WAY (DRAINAGE CRITERIA MANUAL SECTION 1.2.2.B). WHEN THERE IS AN ELEVATION DIFFERENCE BETWEEN THE BOTTOM OF RAMPS (IE. ELEVATION AT THE GUTTER) WITHIN A QUADRANT OF AN INTERSECTION, THE LOWER ELEVATION RAMP SHALL BE CONSTRUCTED WITH A POSITIVE RAMP SLOPE OF 1:12 IN ACCORDANCE WITH STANDARDS 432S-5, 432S-5A AND 432S-5B.
4. STANDARD ASSIGNMENT OF SIDEWALKS IS 600 mm (2') OFF PROPERTY LINE, EXCEPT AS INDICATED ON THE DRAWINGS.
5. ALTHOUGH CURB RAMPS MAY BE PLACED WITHIN THE RADIUS, PLACING THE RAMP OUTSIDE OF THE RADIUS WILL ALLOW FOR THE GREATEST DIFFERENCE IN ELEVATION BETWEEN THE RAMPS.
6. WINGS ARE REQUIRED ONLY IF PEDESTRIANS WOULD NORMALLY CROSS THE RAMP.
7. LANDINGS SHALL BE FLAT AND MATCH PT, PC OR TOP OF CURB ELEVATION.
8. CURB RAMPS WILL BE PERPENDICULAR TO ROADWAY CENTERLINES AND SHALL ALIGN WITH EACH OTHER.
9. GRADES ON SIDEWALKS LEADING TO OR FROM THE RAMPS SHALL FOLLOW CURB GRADES.
10. THE SLOPE OF THE SIDEWALK WHICH IS LOCATED WITHIN THE RADIUS AND CONNECTS TWO CURB RAMPS SHALL NOT EXCEED 1:20. THE DEVELOPER, AS PART OF THE CURB RAMP INSTALLATION, SHALL CONSTRUCT THIS CONNECTING SIDEWALK.
11. STRIPING AND SIGNAGE NOT REQUIRED IN ALL INSTANCES. STOP BARS, IF REQUIRED, SHALL BE LOCATED 1.2 m (4') FROM CROSSWALK.
12. IF A MEDIAN EXTENDS INTO THE CROSSWALK AREA, AN OPENING SHALL BE PROVIDED IN THE MEDIAN THE SAME WIDTH AS THE CURB RAMP.
13. CURB INLETS SHALL NOT BE LOCATED WITHIN 3.0 m (10') OF A CURB RAMP.
14. GUTTER SHALL PROVIDE SMOOTH TRANSITION TO RAMPS.

CITY OF AUSTIN DEPARTMENT OF PUBLIC WORKS		TYPE I CURB RAMPS-FULL INTERSECTION	
RECORD COPY SIGNED BY BILL GARDNER	03/13/06 ADOPTED	THE ARCHITECT/ENGINEER ASSUMES RESPONSIBILITY FOR APPROPRIATE USE OF THIS STANDARD.	STANDARD NO. 432S-3 3 OF 3

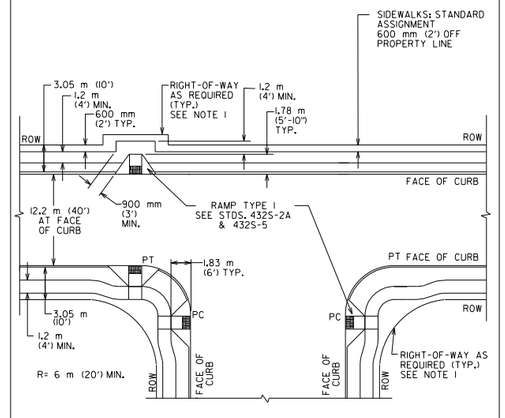

TYPICAL PLAN

CITY OF AUSTIN DEPARTMENT OF PUBLIC WORKS		TYPE I CURB RAMPS - "T" INTERSECTION	
RECORD COPY SIGNED BY BILL GARDNER	03/13/06 ADOPTED	THE ARCHITECT/ENGINEER ASSUMES RESPONSIBILITY FOR APPROPRIATE USE OF THIS STANDARD.	STANDARD NO. 432S-3A 1 OF 2

GENERAL NOTES:

1. THIS STANDARD IS APPLICABLE FOR RAMP CONSTRUCTION WITHIN RIGHT-OF-WAY OR EASEMENT ONLY.
2. THIS STANDARD REPRESENTS A TYPICAL CURB RAMP DESIGN FOR A NEWLY CONSTRUCTED INTERSECTION WITH A 6 m (20') RADIUS. LARGER RADII, STREET GRADES, LIMITED SIGHT DISTANCES, STREET CLASSIFICATION, SIGNALIZATION AND OTHER FACTORS MAY REQUIRE THE ENGINEER OR DESIGNATED REPRESENTATIVE TO MODIFY THIS STANDARD. SUFFICIENT RIGHT-OF-WAY SHALL BE DEDICATED SUCH THAT THE ENTIRE CURB RAMP, INCLUDING LANDING, AND THE INTER-CONNECTING SIDEWALK ARE CONTAINED WITHIN THE RIGHT-OF-WAY.
3. THE CURB, GUTTER AND RAMP SYSTEM SHALL BE CONFIGURED TO MAINTAIN ALL RUNOFF FROM A 25 YEAR FREQUENCY STORM WITHIN THE RIGHT-OF-WAY (DRAINAGE CRITERIA MANUAL SECTION 1.2.2.B). WHEN THERE IS AN ELEVATION DIFFERENCE BETWEEN THE BOTTOM OF RAMPS (IE. ELEVATION AT THE GUTTER) WITHIN A QUADRANT OF AN INTERSECTION, THE LOWER ELEVATION RAMP SHALL BE CONSTRUCTED WITH A POSITIVE RAMP SLOPE OF 1:12 IN ACCORDANCE WITH STANDARDS 432S-5, 432S-5A AND 432S-5B.
4. STANDARD ASSIGNMENT OF SIDEWALKS IS 600 mm (2') OFF PROPERTY LINE, EXCEPT AS INDICATED ON THE DRAWINGS.
5. ALTHOUGH CURB RAMPS MAY BE PLACED WITHIN THE RADIUS, PLACING THE RAMP OUTSIDE OF THE RADIUS WILL ALLOW FOR THE GREATEST DIFFERENCE IN ELEVATION BETWEEN THE RAMPS.
6. WINGS ARE REQUIRED ONLY IF PEDESTRIANS WOULD NORMALLY CROSS THE RAMP.
7. LANDINGS SHALL BE FLAT AND MATCH PT, PC OR TOP OF CURB ELEVATION.
8. CURB RAMPS WILL BE PERPENDICULAR TO ROADWAY CENTERLINES AND SHALL ALIGN WITH EACH OTHER.
9. GRADES ON SIDEWALKS LEADING TO OR FROM THE RAMPS SHALL FOLLOW CURB GRADES.
10. THE SLOPE OF THE SIDEWALK WHICH IS LOCATED WITHIN THE RADIUS AND CONNECTS TWO CURB RAMPS SHALL NOT EXCEED 1:20. THE DEVELOPER, AS PART OF THE CURB RAMP INSTALLATION, SHALL CONSTRUCT THIS CONNECTING SIDEWALK.
11. STRIPING AND SIGNAGE NOT REQUIRED IN ALL INSTANCES. STOP BARS, IF REQUIRED, SHALL BE LOCATED 1.2 m (4') FROM CROSSWALK.
12. IF A MEDIAN EXTENDS INTO THE CROSSWALK AREA, AN OPENING SHALL BE PROVIDED IN THE MEDIAN THE SAME WIDTH AS THE CURB RAMP.
13. CURB INLETS SHALL NOT BE LOCATED WITHIN 3.0 m (10') OF A CURB RAMP.
14. GUTTER SHALL PROVIDE SMOOTH TRANSITION TO RAMPS.

CITY OF AUSTIN DEPARTMENT OF PUBLIC WORKS		TYPE I CURB RAMPS - "T" INTERSECTION	
RECORD COPY SIGNED *BY BILL GARDNER*	*03/13/06* ADOPTED	THE ARCHITECT/ENGINEER ASSUMES RESPONSIBILITY FOR APPROPRIATE USE OF THIS STANDARD.	STANDARD NO. 432S-3A 2 OF 2

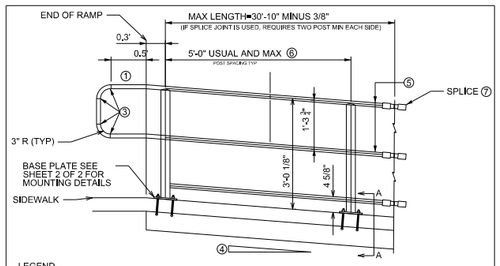

LEGEND
1. PARALLEL TO THE GROUND.
2. SHOP SPLICE IS PERMITTED WITH MINIMUM 85 PERCENT PENETRATION. THE WELD MAY BE SQUARE GROOVE OR SINGLE VEE GROOVE. GRIND SMOOTH.
3. SEE RAMP DETAIL LOCATED ELSEWHERE IN DRAWINGS FOR RAMP SLOPE AND DIMENSIONS. MAXIMUM RAMP SLOPE WILL NOT EXCEED 8.3 PERCENT. LEVEL LANDING REQUIRED FOR EACH 30" RISE IF GRADE EXCEEDS 5 PERCENT.
4. 1" DIA EXTRA HEAVY PIPE (1.315" O.D. , 0.179" WALL THICKNESS). PARALLEL TO RAMP/ SIDEWALK. PROVIDE HOLES AS NEEDED IN 1" DIA PIPE FOR GALVANIZING DRAINAGE AND VENTING.
5. 2 ½ DIA STANDARD PIPE (2.875" O.D. , 0.202" WALL THICKNESS). PLUMB ALL POSTS. SEE POST MOUNT DETAIL FOR CRIMPING AND TRIMMING POST TO FIT DIA OF TOP RAIL. PROVIDE HOLES AS NEEDED IN POST FOR GALVANIZING DRAINAGE AND VENTING.
6. SEE HANDRAIL FABRICATION DETAILS FOR SPLICE JOINTS.
7. CENTER LINE ⅝ DIA ROUND BAR EQ SPACES AT 4 ½ " MAX. PLUMB ALL PICKETS.

NOTE:
IF SPLICE JOINT IS USED, REQUIRES TWO POST MINIMUM EACH SIDE

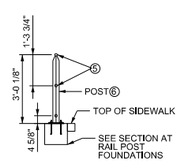

SECTION A-A

NOTES
* WHEN NEEDED FOR ACCESSIBILITY (GRADE >5 PERCENT) OR AS NEEDED FOR PEDESTRIAN SAFETY.
* NOT TO BE USED ON BRIDGES
* ONE SHOP SPLICE PER PANEL IS PERMITTED WITH MINIMUM 85 PERCENT PENETRATION. THE WELD MAY BE SQUARE GROOVE OR SINGLE VEE GROOVE. GRIND SMOOTH.

CITY OF AUSTIN DEPARTMENT OF PUBLIC WORKS		PEDESTRIAN ADA HANDRAIL ON SIDEWALK OPTION 3	
RECORD COPY SIGNED BY KERI JUAREZ	01/04/11 ADOPTED	THE ARCHITECT/ENGINEER ASSUMES RESPONSIBILITY FOR APPROPRIATE USE OF THIS STANDARD.	STANDARD NO. 707-4 1 OF 2

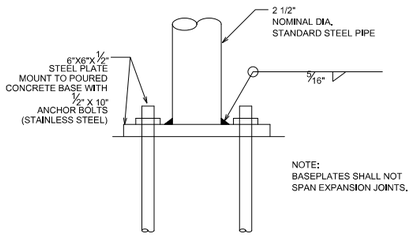

NOTE:
BASEPLATES SHALL NOT SPAN EXPANSION JOINTS.

BASE PLATE DETAIL

CITY OF AUSTIN DEPARTMENT OF PUBLIC WORKS		PEDESTRIAN ADA HANDRAIL ON SIDEWALK- OPTION 3	
RECORD COPY SIGNED BY KERI JUAREZ	01/04/11 ADOPTED	THE ARCHITECT/ENGINEER ASSUMES RESPONSIBILITY FOR APPROPRIATE USE OF THIS STANDARD.	STANDARD NO. 707-4 2 OF 2

NUMBER	DATE	REVISION	APPROVED

CEDAR PARK

Binkley & Barfield, Inc
consulting engineers
Texas Registration Number F-257

ANDERSON MILL ROAD
GASPAR BEND TO WHITESTONE BLVD
STANDARD DETAILS ROADWAY

DESIGN BY:	GCC	SCALE:N/A
DRAWN BY:	DSH	
CHECKED BY:	DRE	
APPROVED BY:	BDR	SHEET:
PROJECT NO:	156402	
DATE:	10/6/2016	PAGE: 221

10/6/2016
8:50:53 AM
...\CADD\SHEETS\RDSD1*AM*03.dgn

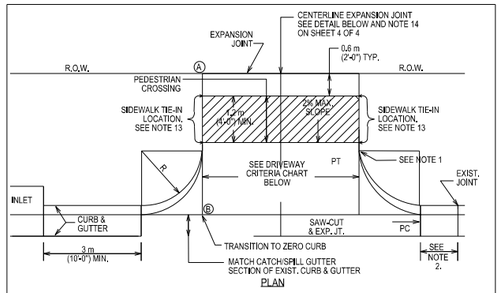

PLAN

NOTE: ALL DRIVEWAYS SHALL BE SLOPED TOWARDS THE STREET FROM THE R.O.W. LINE. ELEVATION OF POINT (A) ABOVE POINT (B) IS, TYPICALLY A MINIMUM OF 150 mm (6") PLUS 20 mm/m ($\frac{1}{4}$" RISE/FOOT) OVER DISTANCE "X" IN METERS (FEET).

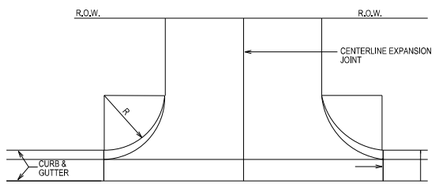

PLAN

CITY OF AUSTIN DEPARTMENT OF PUBLIC WORKS	TYPE I DRIVEWAY (1 & 2 FAMILY RESIDENTIAL USE ONLY)	
RECORD COPY SIGNED BY SAM ANGOORI — 10/19/09 — ADOPTED	THE ARCHITECT/ENGINEER ASSUMES RESPONSIBILITY FOR APPROPRIATE USE OF THIS STANDARD.	STANDARD NO. 433S-1 1 OF 4

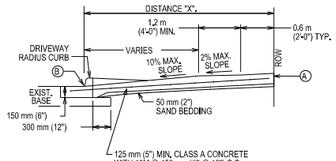

125 mm (5") MIN. CLASS A CONCRETE WITH 10M @ 450 mm (#3 @ 18") C.C. OR 150 mm X 150 mm X M/W10 X M/W10 (6" X 6" X W1.5 X W1.5) MINIMUM.

REINFORCEMENT SHALL ACCURATELY PLACED AT SLAB MID-DEPTH AND HELD FIRMLY IN PLACE BY MEANS OF BAR SUPPORTS OF ADEQUATE STRENGTH AND NUMBER THAT WILL PREVENT DISPLACEMENT AND KEEP THE STEEL AT ITS PROPER POSITION DURING THE PLACEMENT OF THE P.C. CONCRETE. IN NO INSTANCE SHALL THE STEEL BE PLACED DIRECTLY ON THE SUBGRADE OR SAND CUSHION LAYER.

CROSS SECTION

CITY OF AUSTIN DEPARTMENT OF PUBLIC WORKS	TYPE I DRIVEWAY (1 & 2 FAMILY RESIDENTIAL USE ONLY)	
RECORD COPY SIGNED BY SAM ANGOORI — 10/19/09 — ADOPTED	THE ARCHITECT/ENGINEER ASSUMES RESPONSIBILITY FOR APPROPRIATE USE OF THIS STANDARD.	STANDARD NO. 433S-1 2 OF 4

DRIVEWAY CRITERIA	WIDTH METERS (FEET)		
USE	MIN.	*OPT.	MAX.
SIN. FAMILY	3.66 (12)	5.50 (18)	11.80 (25)
DUPLEX	4.56 (15)	5.50 (18)	11.80 (25)
TOWN HOME	4.56 (15)	5.50 (18)	11.80 (25)

*OPTIMUM

RADIUS DIMENSION METERS (FEET)			
USE	MIN.	*OPT.	MAX.
SINGLE FAMILY	1.5 (5)	1.5 (5)	3.0 (10)
DUPLEX	1.5 (5)	2.4 (8)	3.0 (10)
TOWN HOME	1.5 (5)	2.4 (8)	3.0 (10)

*OPTIMUM

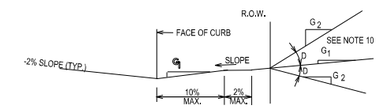

ALLOWABLE GRADES

CITY OF AUSTIN DEPARTMENT OF PUBLIC WORKS	TYPE I DRIVEWAY (1 & 2 FAMILY RESIDENTIAL USE ONLY)	
RECORD COPY SIGNED BY SAM ANGOORI — 10/19/09 — ADOPTED	THE ARCHITECT/ENGINEER ASSUMES RESPONSIBILITY FOR APPROPRIATE USE OF THIS STANDARD.	STANDARD NO. 433S-1 3 OF 4

NOTES:

1. "ZERO" CURB AT PT OR SIDEWALK EDGE, WHICHEVER IS ENCOUNTERED FIRST. THE DRIVEWAY EDGE SHALL BE SMOOTHLY TRANSITIONED INTO THE SIDEWALK BEGINNING AT THE RADIUS PC LINE.
2. IF DIMENSION IS LESS THAN 1.5 METERS (5 FEET), REMOVE CURB AND GUTTER TO EXISTING JOINT AND POUR MONOLITHICALLY WITH THE DRIVEWAY.
3. IF THE BASE IS OVER EXCAVATED WHERE THE CURB AND GUTTER WAS REMOVED, BACKFILL WITH CONCRETE MONOLITHICALLY WITH THE DRIVEWAY.
4. ALL DRIVEWAYS MUST BE CONSTRUCTED WITHIN THE STREET FRONTAGE OF THE SUBJECT PROPERTY AS DETERMINED BY EXTENDING THE SIDE PROPERTY LINES TO THE CURB.
5. DRIVEWAYS SHALL NOT EXCEED 70% OF A LOTS' STREET FRONTAGE.
6. TYPE I DRIVEWAYS ARE TO BE LOCATED NO CLOSER TO THE CORNER OF INTER-SECTING RIGHTS-OF-WAY THAN 60% OF PARCEL FRONTAGE OR 15 METERS (50 FEET); WHICHEVER IS LESS.
7. DRIVEWAYS SHALL NOT BE CONSTRUCTED WITHIN THE CURB RETURN OF A STREET INTERSECTION.
8. SINGLE FAMILY LOTS LIMITED TO ONE DRIVEWAY EXCEPT FOR APPROVED SEMICIRCULAR DRIVES.
9. WHEN TWO DRIVEWAYS ARE USED (ONE PER UNIT; TWO MAXIMUM) FOR DUPLEXES AND TOWN HOMES, SINGLE FAMILY STANDARDS SHALL APPLY.
10. WHILE THE PROPERTY OWNER REMAINS RESPONSIBLE FOR GRADE BREAKS WITHIN PRIVATE PROPERTY, THE FIRE DEPARTMENT SHOULD BE CONSULTED WHERE THE DRIVEWAY IS ESSENTIAL TO EMERGENCY VEHICLE ACCESS AND "G2" IS GREATER THAN 15%. "G1" PLUS "D" SHOULD NOT EXCEED 15%.
11. SEE TRANSPORTATION MANUAL SECTION 5 FOR OTHER DRIVEWAY REQUIREMENTS.
12. USE 12 mm ($\frac{1}{2}$") ASPHALT BOARD, OR OTHER APPROVED MATERIAL, FOR CURB AND GUTTER EXPANSION JOINTS.
13. THE SIDEWALK, REGARDLESS OF ITS LOCATION WITH RESPECT TO THE CURB OR PROPERTY LINE, SHALL BE CONNECTED TO THE DRIVEWAY AT THESE LOCATIONS.
14. PLACE AN EXPANSION JOINT DOWN THE CENTER OF ALL DRIVEWAYS.
15. WATER METER BOXES AND WASTEWATER CLEAN OUTS ARE PROHIBITED FROM BEING LOCATED IN DRIVEWAY AREAS.

CITY OF AUSTIN DEPARTMENT OF PUBLIC WORKS	TYPE I DRIVEWAY (1 & 2 FAMILY RESIDENTIAL USE ONLY)	
RECORD COPY SIGNED BY SAM ANGOORI — 10/19/09 — ADOPTED	THE ARCHITECT/ENGINEER ASSUMES RESPONSIBILITY FOR APPROPRIATE USE OF THIS STANDARD.	STANDARD NO. 433S-1 4 OF 4

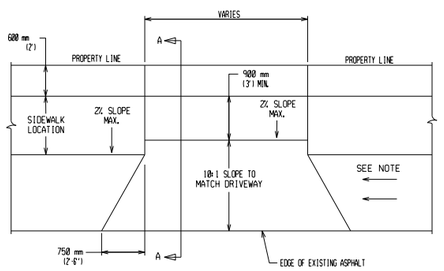

PLAN

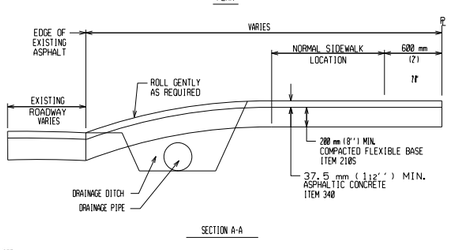

SECTION A-A

NOTE:
DRIVEWAY APPROACH SHALL BE SHAPED TO ALLOW FOR DRAINAGE OR A DRAINAGE PIPE UNDER DRIVEWAY APPROACH MAY BE REQUIRED.

CITY OF AUSTIN DEPARTMENT OF PUBLIC WORKS	TEMPORARY DRIVEWAY	
RECORD COPY SIGNED BY LEON BARBA — 5/23/00 — ADOPTED	THE ARCHITECT/ENGINEER ASSUMES RESPONSIBILITY FOR APPROPRIATE USE OF THIS STANDARD.	STANDARD NO. 433S-3

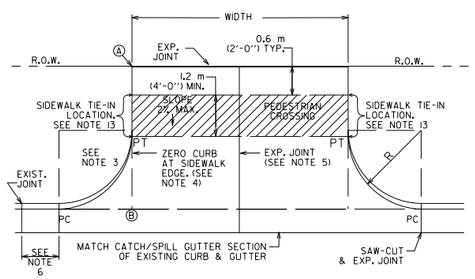

PLAN

NOTE: ALL DRIVEWAYS SHALL BE SLOPED TOWARDS THE STREET FROM THE R.O.W. LINE. ELEVATION OF (A) POINT A ABOVE (B) POINT B IS, TYPICALLY A MINIMUM OF 150 mm (6") PLUS 20 mm/m ($\frac{1}{4}$" RISE/FOOT) OVER DISTANCE "X" IN METERS (FEET).

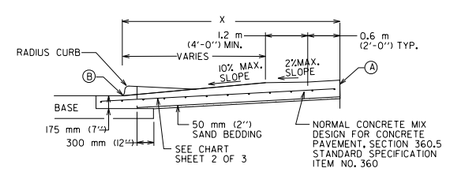

CROSS SECTION

CITY OF AUSTIN DEPARTMENT OF PUBLIC WORKS	TYPE II DRIVEWAY	
RECORD COPY SIGNED BY CUONG TRAN — 02/24/10 — ADOPTED	THE ARCHITECT/ENGINEER ASSUMES RESPONSIBILITY FOR APPROPRIATE USE OF THIS STANDARD.	STANDARD NO. 433S-2 1 OF 2

USE	THICKNESS	REINFORCEMENT
DRIVEWAYS FOR PASSENGER VEHICLE PARKING LOTS	150 mm (6") MIN.	125 mm (5") MIN. CONCRETE WITH ONE LAYER OF 13M (#4) BARS PLACED ON CHAIRS AT MIDDEPTH OF SLAB AT NO MORE THAN 450 mm (18") O.C. BOTH DIRECTIONS
ALL OTHERS	175 mm (7") MIN.	125 mm (5") MIN. CONCRETE WITH ONE LAYER OF 13M (#4) BARS PLACED ON CHAIRS AT MIDDEPTH OF SLAB AT NO MORE THAN 450 mm (18") O.C. BOTH DIRECTIONS

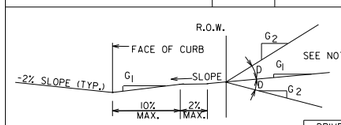

ALLOWABLE GRADES

DRIVEWAY VOLUME (ADT)	D=GRADE CHANGE	
	STD.	MAX
>1500	0%	3%
500-1500	3%	6%
< 500	6%	15%

NOTES:

1. ALL TYPE II DRIVEWAYS SHALL HAVE RADIUS ENDS.
2. DRIVEWAY WIDTHS AND RADII DIMENSIONS, ONE/TWO WAY TRAVEL REQUIREMENTS, AND GEOMETRIC LAY-OUT ARE HIGHLY VARIABLE SUBJECT TO SITE SPECIFIC CONDITIONS AND REQUIREMENTS. SEE TRANSPORTATION CRITERIA MANUAL, SECTION 5 "DRIVEWAYS".
3. THE DRIVEWAY EDGE SHALL BE SMOOTHLY TRANSITITIONED INTO THE SIDEWALK TIE-IN LOCATION BEGINNING AT THE RADIUS PC LINE.
4. "ZERO" CURB AT PT OR SIDEWALK EDGE, WHICHEVER IS ENCOUNTERED FIRST.
5. PLACE AN EXPANSION JOINT DOWN THE CENTER OF DRIVEWAY ALL DRIVEWAYS.
6. IF DIMENSION IS LESS THAN 1.5 METERS (5 FEET), REMOVE CURB AND GUTTER TO EXISTING JOINT AND POUR MONOLITHICALLY WITH DRIVEWAY.
7. IF THE BASE IS OVER-EXCAVATED WHERE THE CURB AND GUTTER WERE REMOVED, BACKFILL WITH CONCRETE MONOLITHICALLY WITH THE DRIVEWAY.
8. TYPE II DRIVEWAYS, ARE TO BE LOCATED NO CLOSER TO THE CORNER OF INTERSECTING RIGHT OF WAY THAN 60% OF PARCEL FRONTAGE AT 30 METERS (100 FEET); WHICHEVER IS LESS.
9. DRIVEWAY SHALL NOT BE CONSTRUCTED WITHIN THE CURB RETURN OF A STREET INTERSECTION.
10. WHILE THE PROPERTY OWNER REMAINS RESPONSIBLE FOR GRADE BREAKS WITHIN PRIVATE PROPERTY, THE FIRE DEPARTMENT SHALL BE CONSULTED WHERE THE DRIVEWAY IS ESSENTIAL TO EMERGENCY VEHICLE ACCESS AND "G2" IS GREATER THAN 15%.
11. USE 12 MM (1/2") ASPHALT BOARD OR OTHER APPROVED MATERIAL FOR CURB AND GUTTER EXPANSION JOINTS. SIDEWALK, AT THE R.O.W. LINE AND AT MIDWIDTH, SEE NOTE 5.
12. SEE TRANSPORTATION CRITERIA MANUAL, SECTION 5 FOR OTHER DRIVEWAY REQUIREMENTS.
13. THE SIDEWALK, REGARDLESS OF ITS LOCATION WITH RESPECT TO THE CURB OR PROPERTY LINE, SHALL BE CONNECTED TO THE DRIVEWAY AT THESE LOCATIONS.
14. WATER METER BOXES AND WASTEWATER CLEAN OUTS ARE PROHIBITED FROM BEING LOCATED IN DRIVEWAY AREAS.

CITY OF AUSTIN DEPARTMENT OF PUBLIC WORKS	TYPE II DRIVEWAY	
RECORD COPY SIGNED BY CUONG TRAN — 02/24/10 — ADOPTED	THE ARCHITECT/ENGINEER ASSUMES RESPONSIBILITY FOR APPROPRIATE USE OF THIS STANDARD.	STANDARD NO. 433S-2 2 OF 2

NUMBER	DATE	REVISION	APPROVED

CEDAR PARK

Binkley & Barfield, Inc
consulting engineers
Texas Registration Number F-257

ANDERSON MILL ROAD
GASPAR BEND TO WHITESTONE BLVD
STANDARD DETAILS ROADWAY

DESIGN BY:	GCC	SCALE: N/A
DRAWN BY:	DSH	
CHECKED BY:	DRE	
APPROVED BY:	BDR	SHEET:
PROJECT NO:	156402	
DATE:	10/6/2016	PAGE: 222

10/6/2016
8:50:54 AM
...\CADD\SHEETS\RDSD1*AM*09.dgn

DISCLAIMER:
The use of this standard is governed by the "Texas Engineering Practice Act". No warranty of any kind is made by TxDOT for any purpose whatsoever. TxDOT assumes no responsibility for the conversion of this standard to other formats or for incorrect results or damages resulting from its use.

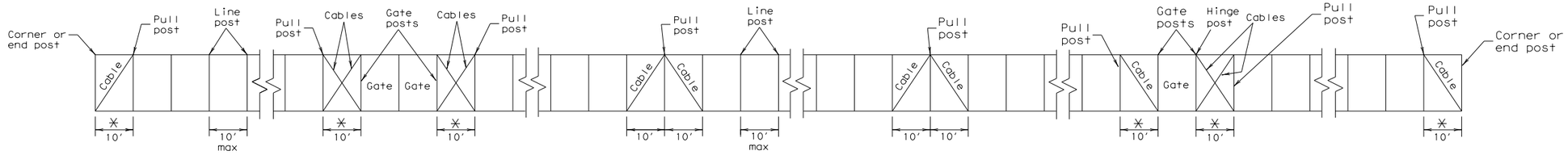

TYPICAL CABLE AND POST ARRANGEMENT

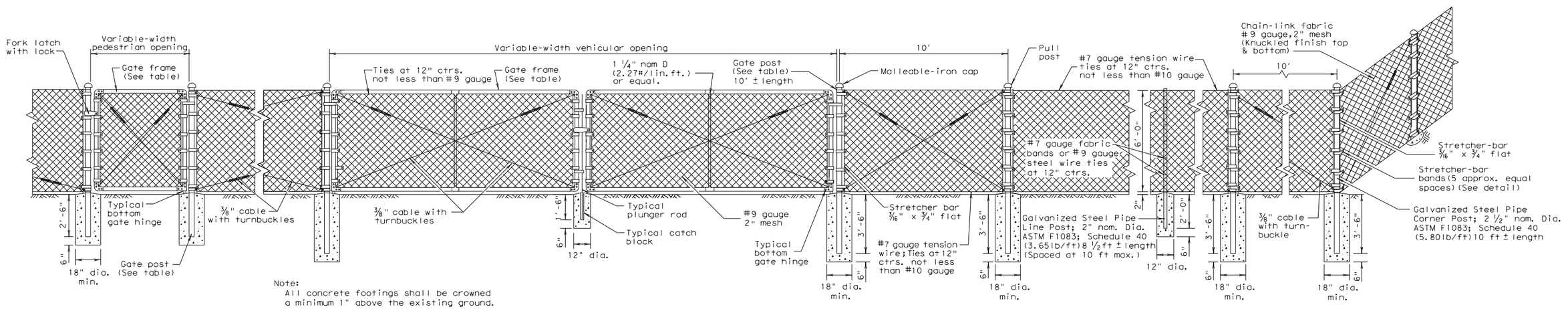

Note:
All concrete footings shall be crowned a minimum 1" above the existing ground.

CHAIN-LINK BARRIER FENCE (6 FT.)

Foundation designs shown are "minimums" for a 6 ft. fence.
Taller fences may require larger foundation designs.

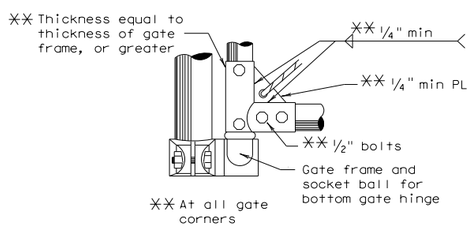

TYPICAL BOTTOM GATE HINGE

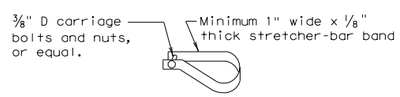

TYPICAL STRETCHER-BAR BAND

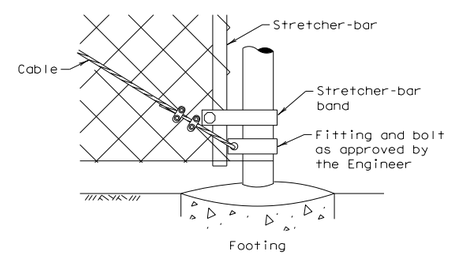

TERMINAL POST DETAIL

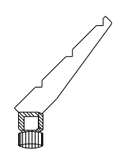

"OPTIONAL" 3 WIRE 45° BARBED WIRE ARM

Barbed wire arm related items shall conform to Item 550, "Chain Link Fence."

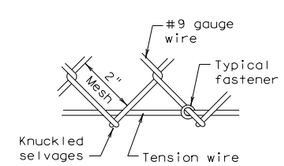

FABRIC & TENSION WIRE DETAIL, TOP & BOTTOM

GATE (TYPES AND SIZES)	
Single Inclusive	Double Inclusive
Up to 6'	Up to 12'
Over 6' to 12'	Over 12' to 26'
Over 12' to 18'	Over 26' to 36'
Over 18'	Over 36'

GATE FRAME (WEIGHT)		GATE POST (WEIGHT)	
SIZE	WT./LIN. FT.	SIZE	WT./LIN. FT.
1 1/2" nom dia. or equal	2.72 Lbs.	2 1/2" nom dia. or equal	5.79 Lbs.
		3 1/2" nom dia. or equal	9.11 Lbs.
		6" nom dia.	18.97 Lbs.
		8" nom dia.	24.70 Lbs.

GENERAL NOTES

1. Items hereon shall conform to Item 550, "Chain Link Fence."
2. Typical installation plan may vary as shown elsewhere on the plans or as directed by the Engineer. Location of gates shown elsewhere on plans.
3. Gate-frame members shall be bolted, at frame corners, to joint fittings with four 1/2" bolts per joint.
4. All cable connections are to be made with two 3/8" cable clamps.
5. All pull posts and end posts and their foundations shall have the same respective dimensions as those shown for corner post.
6. All pull post shall be furnished with two stretcher bars.
7. One end of each turnbuckle may be attached directly to fittings with a clevis.
8. Concrete footings are to be crowned at the top to shed water.

Texas Department of Transportation

Design Division Standard

CHAIN LINK FENCE

CLF-10

FILE: clf10.dgn	DN: TxDOT	CK: AM	DW: BD	CK: VP
© TxDOT 1996	CONT	SECT	JOB	HIGHWAY
REVISIONS				
	DIST	COUNTY		SHEET NO.
				223

DATE:
FILE:

DISCLAIMER:
The use of this standard is governed by the "Texas Engineering Practice Act". No warranty of any kind is made by TxDOT for any purpose whatsoever. TxDOT assumes no responsibility for the conversion of this standard to other formats or for incorrect results or damages resulting from its use.

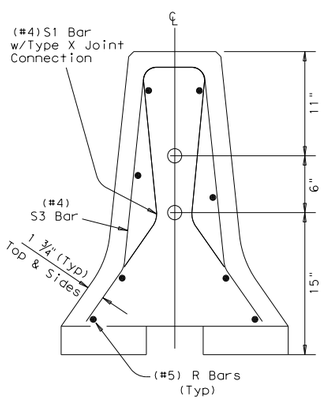

End View Precast Barrier

See sheet 2 of 3 for Joint connection Type X

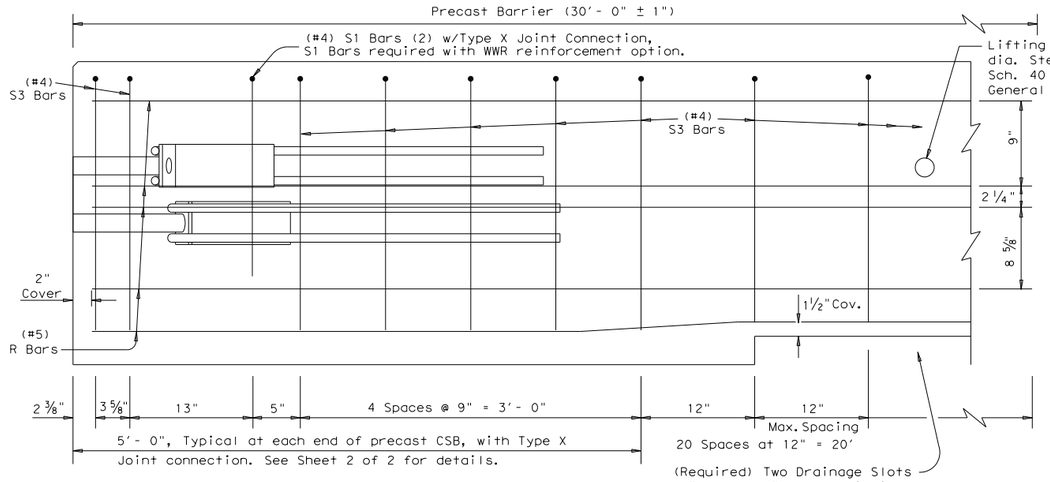

Reinforcement for Precast (CSB) Concrete Safety Barrier (Type 1)

Showing reinforcement for Joint Type X

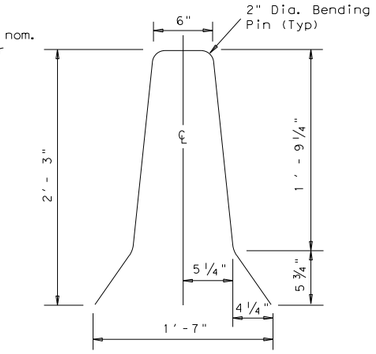

S3 Bar

#4 Bar

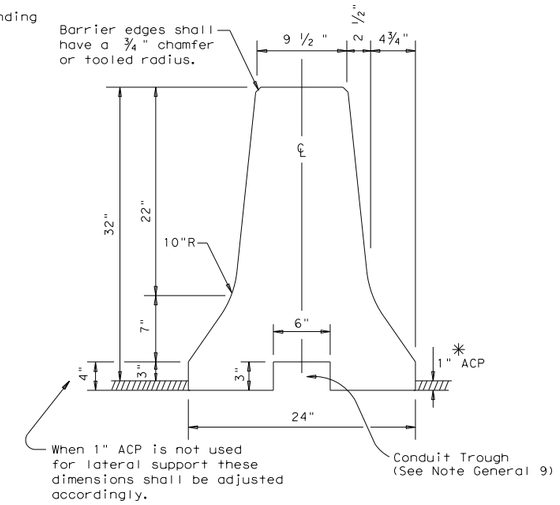

Concrete Safety Barrier

✳ When 1" ACP is "not" used as lateral support for permanent barrier placement. A permissible method of attaining the equivalent lateral support may be used, See CSB(6) sheet.

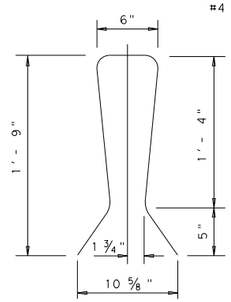

S1 Bar

#4 Bar (2) (Joint Type X)

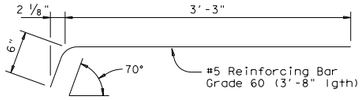

DEFORMED BAR ANCHOR DETAILS

Two (2) Bars required per assembly. Eight (8) required per Joint.

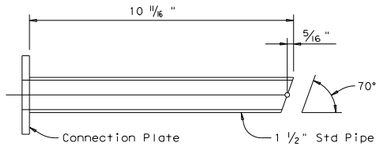

UPPER CONNECTION PIPE DETAILS

One (1) Steel Pipe required per Upper Assembly. Two (2) required per Joint.

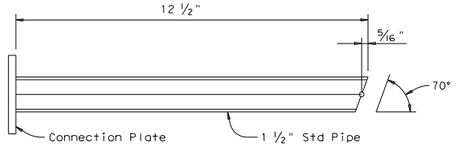

LOWER CONNECTION PIPE DETAILS

One (1) Steel Pipe required per Lower Assembly. Two (2) required per Joint.

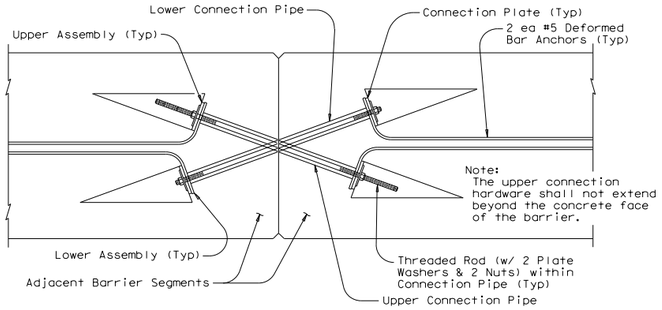

TYPE X JOINT INSTALLATION DETAIL

Barrier reinforcing and Type X Joint Leave-Out dimensions not shown for clarity.

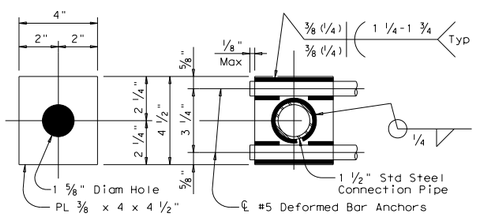

PLATE DIMENSIONS WELDING DETAILS

CONNECTION PLATE DETAILS

One (1) Plate required per assembly. Four (4) required per Joint. All steel fittings for joint Type X shall be galvanized after fabrication in accordance with Item 445.

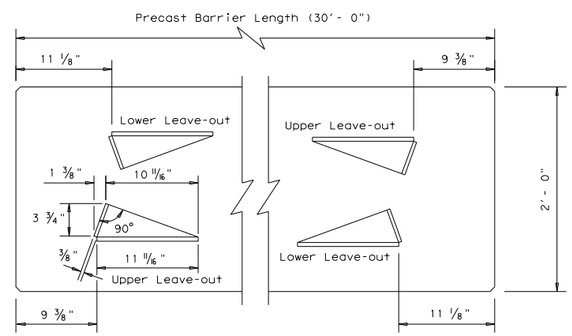

BARRIER PLAN AT END JOINTS

GENERAL NOTES

1. Concrete shall be Class H with a minimum compressive strength of 3,600 psi.
2. Where used, rebar reinforcement shall be Grade 60 and conform to ASTM A615.
3. Precast barrier length shall be 30 ft. unless otherwise specified on the plans.
4. All precast barrier edges shall have a 3/4" chamfer or tooled radius.
5. All concrete, reinforcement, joint connection systems, grout etc. as shown, are considered as part of the barrier payment.
6. All steel assemblies for joint shall be galvanized after fabrication in accordance with Item 445, "Galvanizing."
7. Regardless of the method of handling, barrier lifting points shall be approx. 7.5 feet from the ends of the barrier. Lifting devices and attachments to barrier sections shall be approved by the Engineer.
8. Surface finishing and grouting (where required) shall be two parts sand one part cement with enough water to make the mixture plastic. Grouting shall be done in a manner that will assure a smooth surface. Surface finishing shall be considered subsidiary to the various bid items involved.
9. Conduit trough when required shall be shown elsewhere on the plans, or as directed by the Engineer.

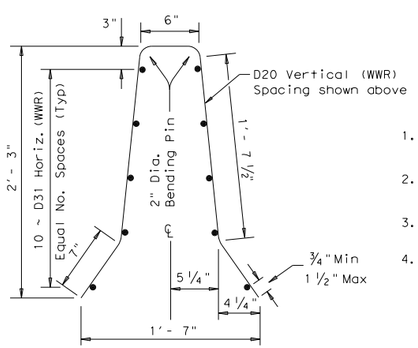

Welded Wire Reinforcement (WWR) Option for Bars R and S3

(WWR) General Notes

1. Deformed Welded Wire Reinforcement (WWR) shall conform to ASTM A497.
2. Welded wire cage may be cut or bent to accommodate the Type X joint connection and drainage slots, as directed by the Engineer.
3. All reinforcement shall comply with Item 440, "Reinforcing Steel."
4. Combinations of reinforcing steel and WWR will be permitted, as directed by the Engineer. The dimension from the end of the barrier section to the first wire shall not exceed 3".

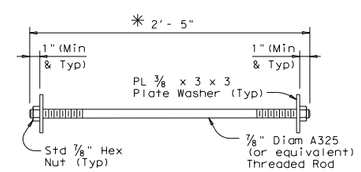

CONNECTION BOLT OR THREADED ROD DETAIL

Two (2) Threaded Rods (Or Equivalent Hex Hd. Bolts) (w/ Two (2) PL 3/8 x 3 x 3 Plate Washers & Two (2) Std Hex Nuts) required per Joint.

✳ The connection hardware shall not extend beyond the concrete face of the barrier. Hex head bolts may be provided. The proper length of all hardware should be verified.

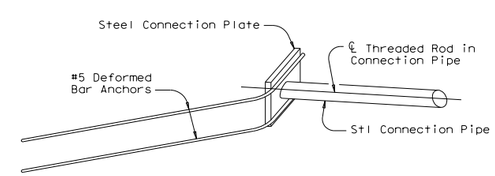

ISOMETRIC OF TYPICAL WELDED ASSEMBLY

Four (4) [2 Upper & 2 Lower] Assemblies required per Joint.

Weight of one Precast 30 ft. (CSB) segment = Approx. 6.5 Tons or 440 lbs per ft.

SHEET 1 OF 2

Texas Department of Transportation — Design Division Standard

CONCRETE SAFETY BARRIER (F-SHAPE)

PRECAST BARRIER (TYPE 1)

CSB(1)-10

FILE: csb110.dgn	DN: TxDOT	CK: AM	DW: BD	CK: VP
© TxDOT December 2010	CONT	SECT	JOB	HIGHWAY
REVISIONS				
	DIST		COUNTY	SHEET NO.
				224

DATE:
FILE:

DISCLAIMER:
The use of this standard is governed by the "Texas Engineering Practice Act". No warranty of any kind is made by TxDOT for any purpose whatsoever. TxDOT assumes no responsibility for the conversion of this standard to other formats or for incorrect results or damages resulting from its use.

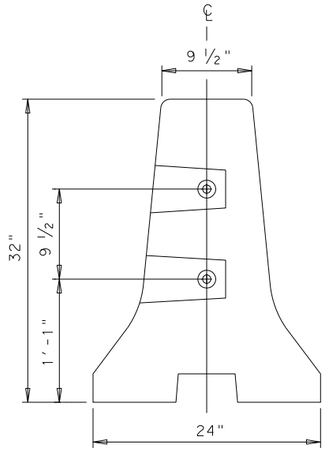

END VIEW (CSB) QUICK-BOLT

QUICK-BOLT POCKET LOCATIONS

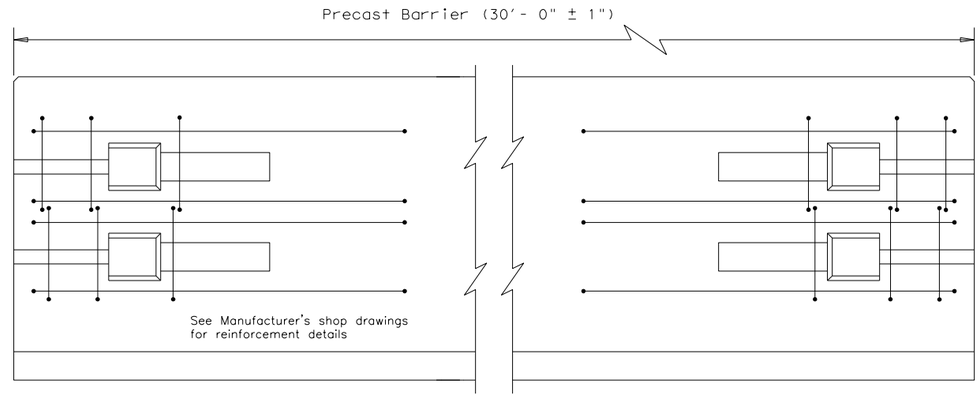

ELEVATION (CSB) QUICK-BOLT

See Manufacturer's shop drawing for additional details

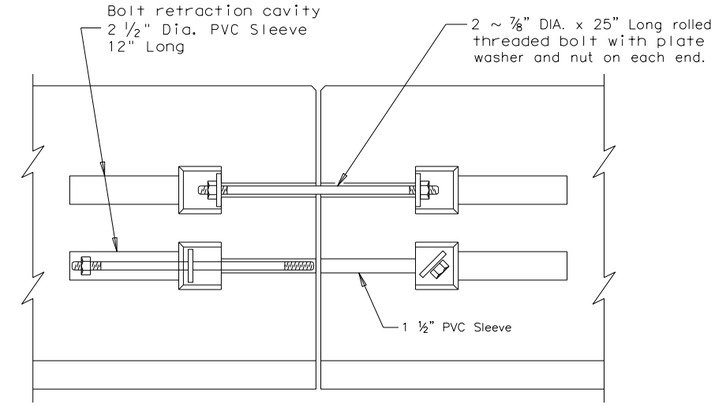

ELEVATION VIEW SHOWING JOINT CONNECTION

"QUICK-BOLT"

Joint Connection (Type Q)

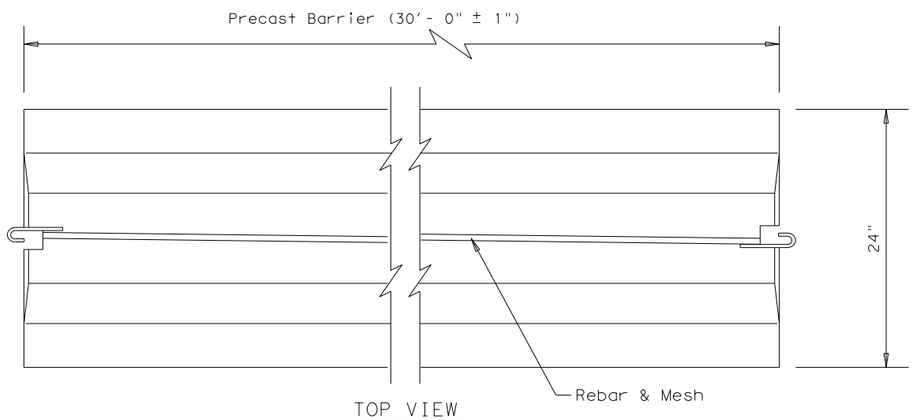

TOP VIEW

PRECAST (CSB) WITH J-J HOOKS

See Manufacturer's shop drawing for additional details

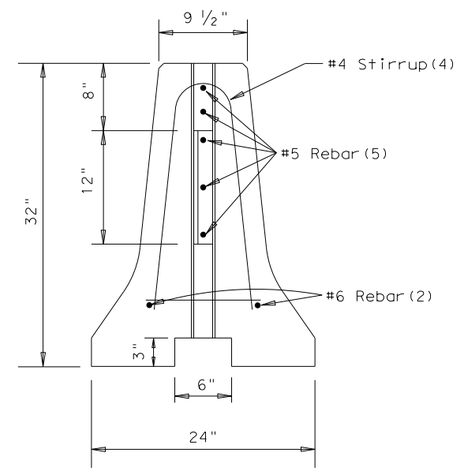

END VIEW

J-J HOOK CONNECTION

Joint Connection (Type J)

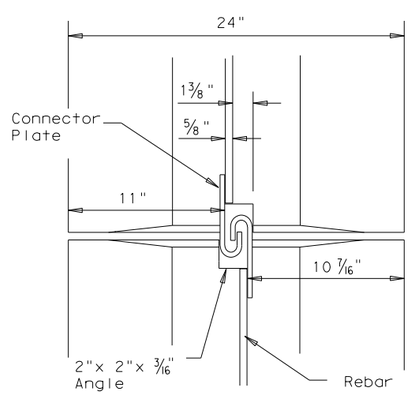

VIEW FROM ABOVE

J-J HOOK CONNECTION

Proprietary Joint Connections (CSB)

Two proprietary joint connections are acceptable as alternates to the (Type X) connection shown, here on. These joint connections types are:

J-J Hooks by Easi-Set Industries, (800)547-4045
Quick-Bolt by Bexar Concrete, (210)497-3773

If one of these connection systems are exclusively specified in the plans, prior approval for sole source use must be obtained. Details of the connection components and barrier reinforcement for these systems, will be shown on the manufacturer's shop drawing(s) furnished to the Engineer.

SHEET 2 OF 2

Texas Department of Transportation — Design Division Standard

CONCRETE SAFETY BARRIER (F-SHAPE)

PRECAST BARRIER (TYPE 1)

CSB(1)-10

FILE: csb110.dgn	DN: TxDOT	CK: AM	DW: BD	CK: VP
©TxDOT December 2010	CONT	SECT	JOB	HIGHWAY
REVISIONS				
	DIST	COUNTY		SHEET NO.
				225

DATE:
FILE:

DISCLAIMER:
The use of this standard is governed by the "Texas Engineering Practice Act". No warranty of any kind is made by TxDOT for any purpose whatsoever. TxDOT assumes no responsibility for the conversion of this standard to other formats or for incorrect results or damages resulting from its use.

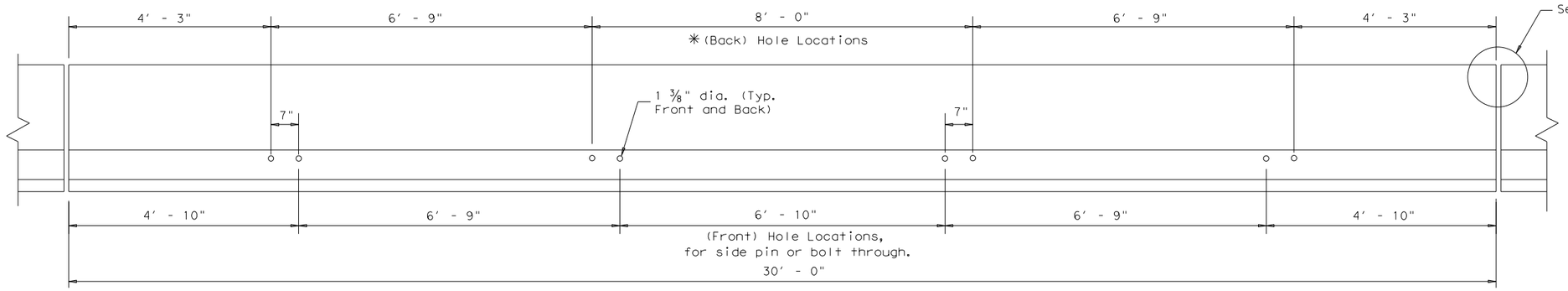

DETAIL 1

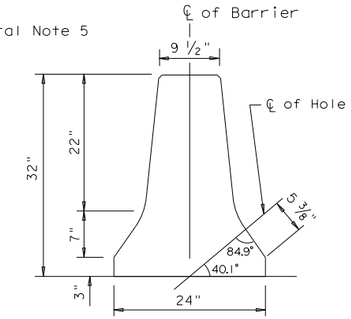

HOLE LOCATION DETAIL

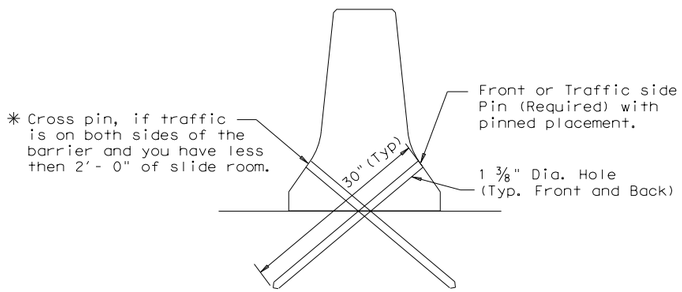

DETAIL 2

Placement on (ACP) Asphalt Concete Pavement or Treated Base Material (30" Pin required)

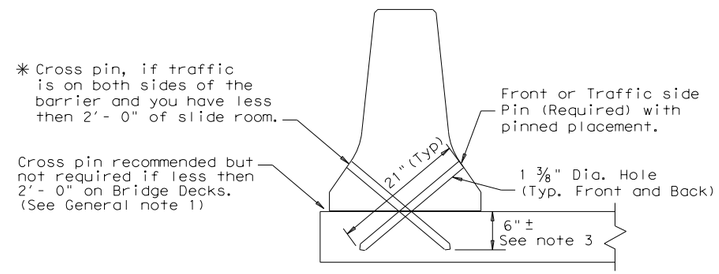

DETAIL 3

Bridge Deck or CRCP (21" pin required)

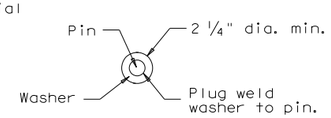

VIEW A-A

CORE DRILLING EXISTING BARRIER

Core drilling existing concrete barrier is permitted. Holes shall be drilled with coring or masonry drilling type equipment. Percussion (star) drilling shall not be used. A special drill bit (to cut through existing reinforcing) will likely be required. Spalls in the concrete exceeding ½" shall be patched.

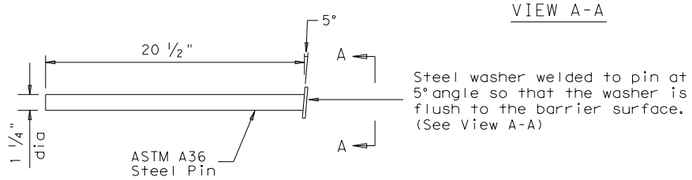

(21") PIN DETAIL

See Detail 3

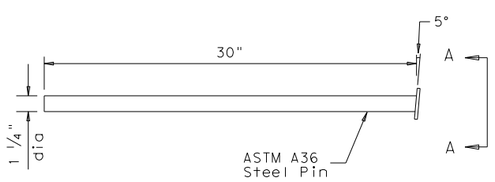

(30") PIN DETAIL

See Detail 2

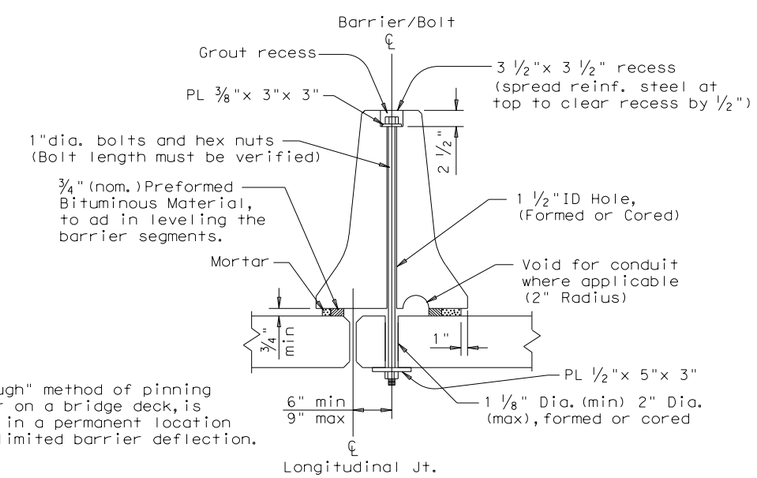

Note:
The "Bolt Through" method of pinning precast barrier on a bridge deck, is primarily used in a permanent location that requires limited barrier deflection.

PRECAST CSB (BOLT THROUGH) PLACEMENT OVER LONGITUDINAL EXPANSION JOINT

For bolt through locations, use the (Front) hole locations shown on Detail 1.

GENERAL NOTES

1. These details provide a method of laterally restraining precast concrete barrier to limit deflections under normally expected passenger vehicle impacts. These details are intended for use in work zones, primarily on bridge decks, or pavement where temporary barrier must be placed less then 2 ft. from the longitudinal edge of the deck or dropoff and parallel to the direction of travel. Other applications of these details are acceptable as directed by the Engineer.
2. Each precast concrete barrier section shall have a minimum of four or total of eight 1 ⅜" ID, holes formed or cored through the barrier. The center lines of the holes are shown in the hole location detail. If rebar is encountered, the entry point may be shifted 2" plus or minus longitudinally along the barrier. The eight holes are spaced along the length of the barrier as shown in Detail 1.
3. The drilling of the travel surface is accomplished by placing the pre-drilled barrier section on the travel surface in the desired position. Then the hole is drilled with the bit passing though the hole in the barrier. The bit is to be inserted into the hole in the barrier so that the travel surface is drilled to a point which is slightly more than the pin length.
4. Note that steel washers have been welded to the top of the steel pins to aid in the removal of the pins, when the barrier is removed.
5. See CSB(1) standard sheets for reinforcement requirements and joint connection types.
6. The forming or coring of holes in the barrier, drilling of holes in bridge deck or pavement, fabrication and materials for the 1 ¼" pins, installation of pins, and any repair to the barrier shall be considered as subsidiary to the barrier bid items.
7. The barrier and travel surface will be repaired as directed by the Engineer in accordance with Item 429, "Concrete Structure Repair."
8. Provide galvanized bolts, nuts, and plate washers. All steel pins shall be galvanized after fabrication in accordance with Item 445, "Galvanizing."
9. Weight of barrier is approx. 440 lbs per foot.

Texas Department of Transportation — Design Division Standard

CONCRETE SAFETY BARRIER (F-SHAPE)

PRECAST BARRIER (TYPE 1) PINNED PLACEMENT

CSB(7)-10

FILE: csb710.dgn	DN: TxDOT	CK: AM	DW: BD	CK:
©TxDOT December 2010	CONT	SECT	JOB	HIGHWAY
REVISIONS	DIST		COUNTY	SHEET NO. 226

DATE:
FILE:

DISCLAIMER:
The use of this standard is governed by the "Texas Engineering Practice Act". No warranty of any kind is made by TxDOT for any purpose whatsoever. TxDOT assumes no responsibility for the conversion of this standard to other formats or for incorrect results or damages resulting from its use.

TYPE 1

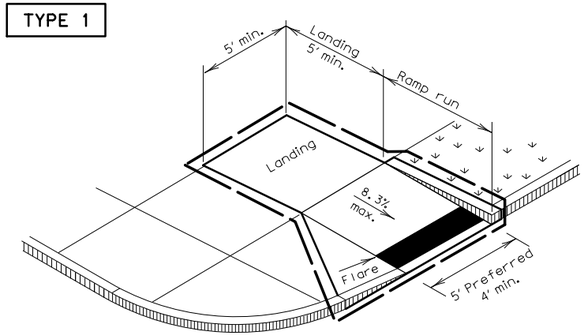

PERPENDICULAR CURB RAMP

TYPE 2

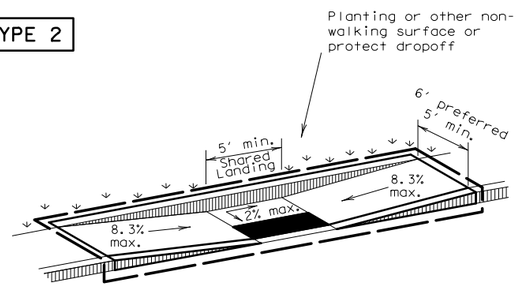

PARALLEL CURB RAMP
(Use only where water will not pond in the landing.)

TYPE 5

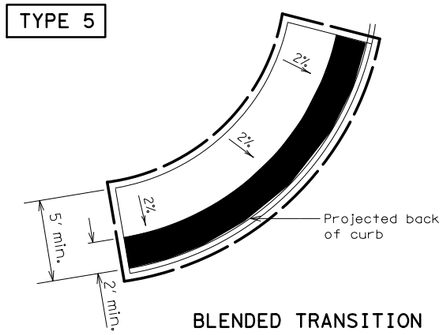

BLENDED TRANSITION

TYPE 20

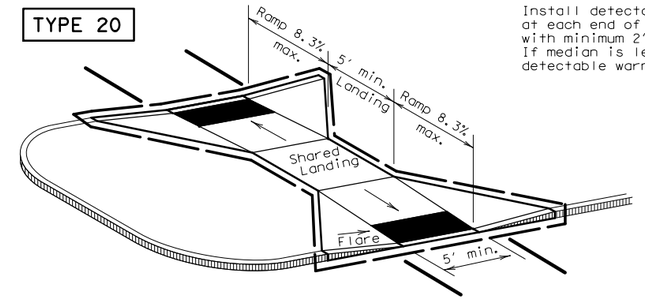

Install detectable warning surface at each end of cut-through ramp with minimum 2' smooth surface between. If median is less than 6' wide, eliminate detectable warning surfaces.

TYPE 21

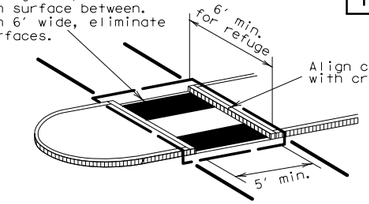

Curb details are shown elsewhere in the plans.

CURB RAMPS AT MEDIAN ISLANDS

TYPE 7

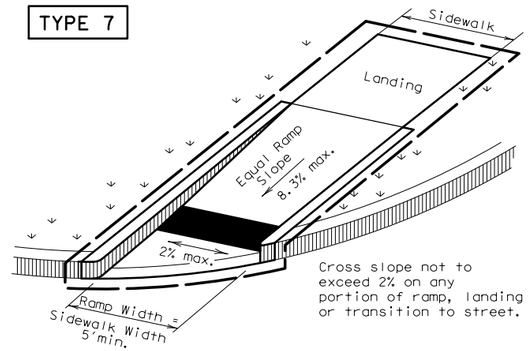

Cross slope not to exceed 2% on any portion of ramp, landing or transition to street.

(Sidewalk set back from curb)

TYPE 10

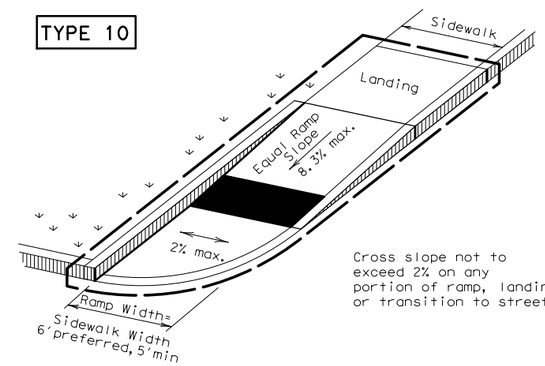

Cross slope not to exceed 2% on any portion of ramp, landing or transition to street.

(Sidewalk adjacent to curb)

DIRECTIONAL RAMPS WITHIN RADIUS

TYPE 22

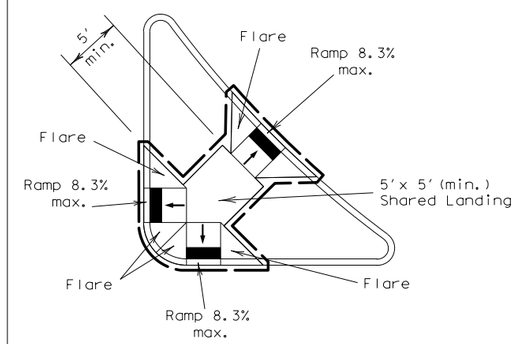

COMBINATION ISLAND RAMPS

TYPE 3

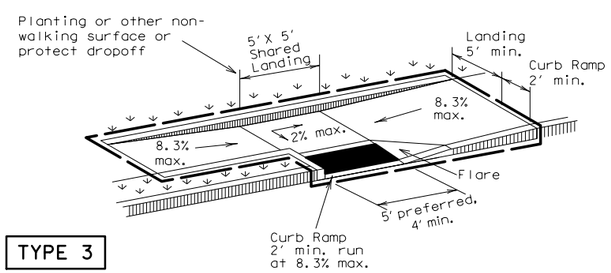

TYPE 6

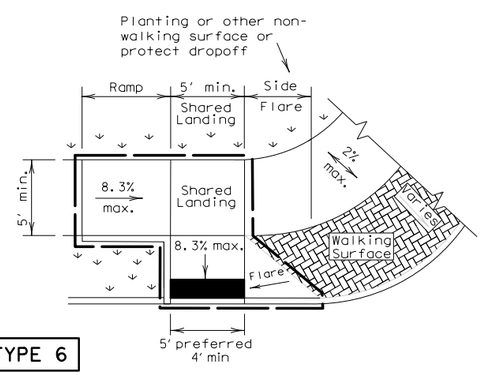

COMBINATION CURB RAMPS

TYPE 11

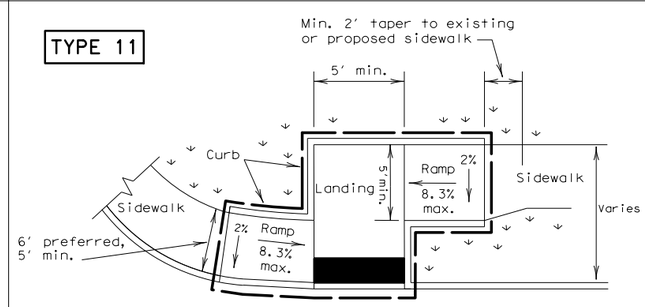

OFFSET PARALLEL CURB RAMP

NOTES / LEGEND:

See General Notes on sheet 2 of 4 for more information.

Denotes planting or non-walking surface not part of pedestrian circulation path.

Ramp Limits of Payment

Detectable Warning Surface

SHEET 1 OF 4

Texas Department of Transportation — Design Division Standard

PEDESTRIAN FACILITIES CURB RAMPS

PED-12A

FILE: ped12a.dgn	DN: TxDOT	CK: RM	DW: TxDOT	CK: VP
© TxDOT March 2002	CONT	SECT	JOB	HIGHWAY
REVISIONS				
VP June 13, 2012	DIST	COUNTY		SHEET NO.
				227

DISCLAIMER:
The use of this standard is governed by the "Texas Engineering Practice Act". No warranty of any kind is made by TxDOT for any purpose whatsoever. TxDOT assumes no responsibility for the conversion of this standard to other formats or for incorrect results or damages resulting from its use.

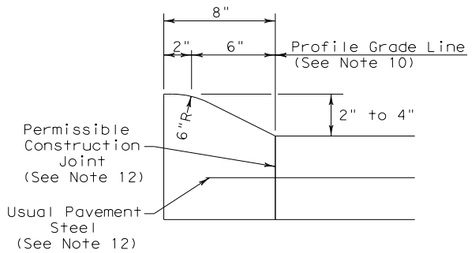

TYPE I CURB (MONOLITHIC)
2" - 4" HEIGHT

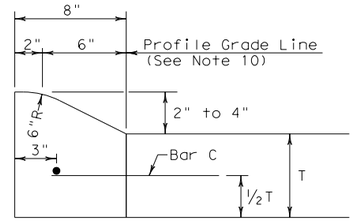

TYPE I CURB
2" - 4" HEIGHT

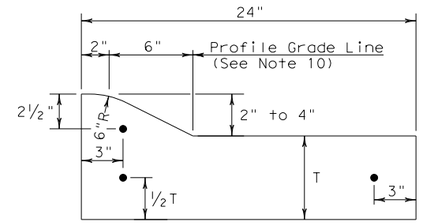

TYPE I CURB AND GUTTER
2" - 4" HEIGHT

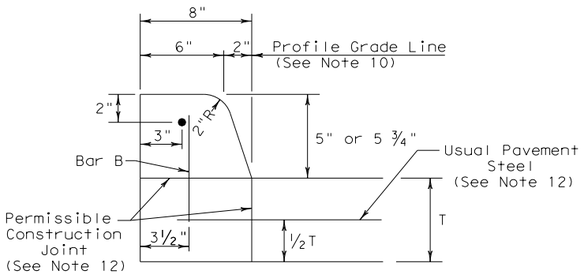

TYPE II CURB (MONOLITHIC)
5" - 5 ¾" HEIGHT

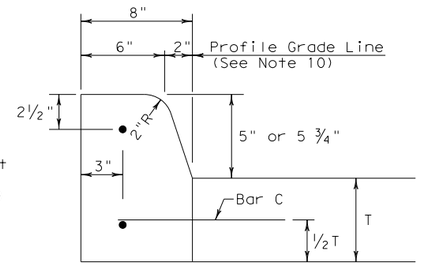

TYPE II CURB
5" - 5 ¾" HEIGHT

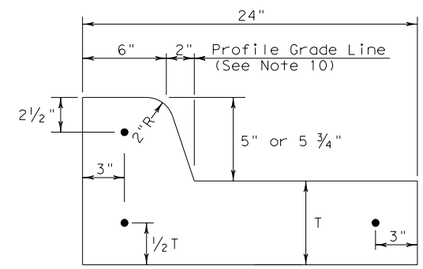

TYPE II CURB AND GUTTER
5" - 5 ¾" HEIGHT

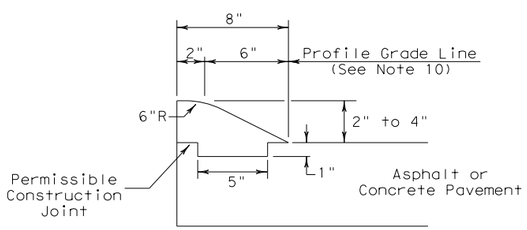

TYPE III CURB (KEYED)
2" - 4" HEIGHT

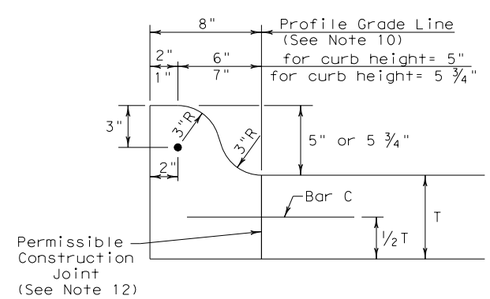

TYPE IIa CURB
5" - 5 ¾" HEIGHT

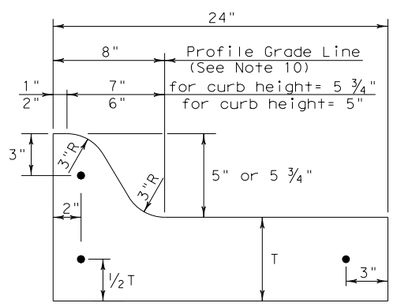

TYPE IIa CURB AND GUTTER
5" - 5 ¾" HEIGHT

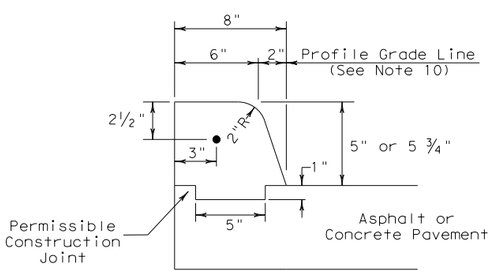

TYPE IV CURB (KEYED)
5" - 5 ¾" HEIGHT

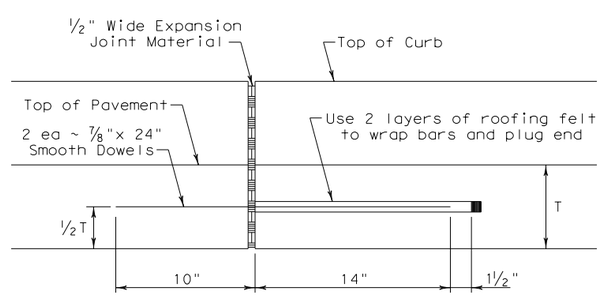

EXPANSION JOINT DETAIL

Curb Transition Note:
Field conditions may require a longer or shorter transition, and shall be shown elsewhere in the plans, or as directed by the Engineer.

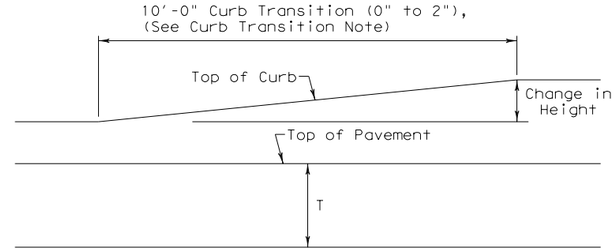

CURB TRANSITION
Note: To be paid for as Highest Curb

General Notes

1. All materials and construction shall be in accordance with Item 529, "Concrete Curb, Gutter, and Combined Curb and Gutter."
2. Concrete shall be Class A.
3. When reinforcing bars are used, they shall be No.4 unless otherwise shown. The use of synthetic fiber in lieu of steel reinforcing is acceptable, provided the fiber producer is on the Department Producer List (MPL), maintained by TxDOT, Construction Division.
4. Round exposed sharp edges with a rounding tool, to a minimum radius of ¼ inch.
5. All existing curbs and driveways to be removed shall be sawed or removed at existing joints.
6. Where concrete curb is placed on existing concrete pavement, the pavement shall be drilled and the reinforcing bars grouted in place.
7. Expansion and contraction joints shall be constructed to match pavement joints in all curbs and curb and gutter adjacent to jointed concrete pavement. Where placement of curb or curb and gutter is not adjacent to concrete pavement, expansion joints shall be provided at structures, curb returns at streets, and at locations directed by The Engineer.
8. Vertical and horizontal dowel bars and transverse reinforcing bars shall be placed at four feet C-C.
9. Dimension 'T' shown is the thickness of concrete pavement. When curb is installed adjacent to flexible pavement dimension 'T' is 8" maximum.
10. Usual profile grade line. Refer to typical sections and plan-profile sheets for exact locations.
11. One-half inch expansion joint material shall be provided where curb or curb and gutter is adjacent to sidewalk or riprap.
12. When vertical permissible construction joints are used, resulting in a longitudinal construction joint in the pavement, the longitudinal pavement steel shall be placed in accordance with pavement details shown elsewhere in the plans for longitudinal construction joints. Reinforcing steel for curb section shall then conform to that required for concrete curb.

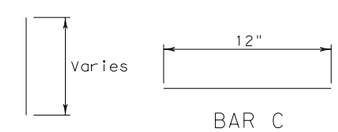

BAR B BAR C

Texas Department of Transportation — Design Division Standard

CONCRETE CURB AND CURB AND GUTTER

CCCG-12

FILE: cccg12.dgn	DN: TxDOT	CK: AM	DW: VP	CK:
© TxDOT: 1995	CONT	SECT	JOB	HIGHWAY
REVISIONS UPDATED 2012 - VP	DIST		COUNTY	SHEET NO. 228

DATE:
FILE:

DISCLAIMER:
The use of this standard is governed by the "Texas Engineering Practice Act". No warranty of any kind is made by TxDOT for any purpose whatsoever. TxDOT assumes no responsibility for the conversion of this standard to other formats or for incorrect results or damages resulting from its use.

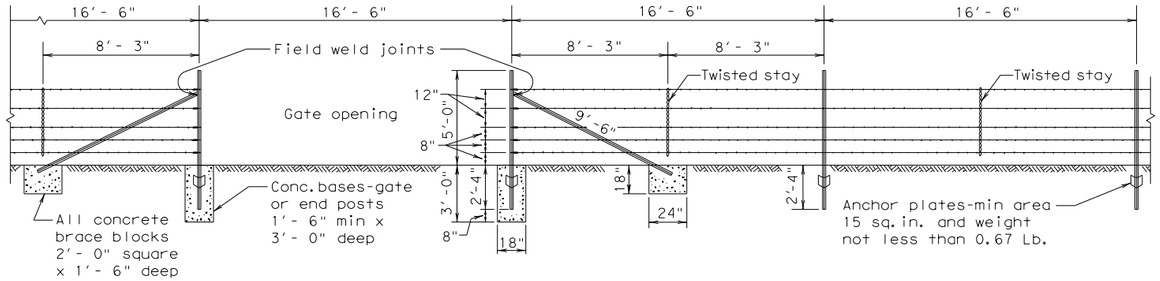

SECTION GALVANIZED BARBED WIRE FENCE WITH METAL POSTS
BRACING DETAIL USED AT ENDS AND GATES
TYPE "C" FENCE
(See General Note 8)

Note:
For Steel pipe and T-Post requirements. (See General Notes 6 & 7)

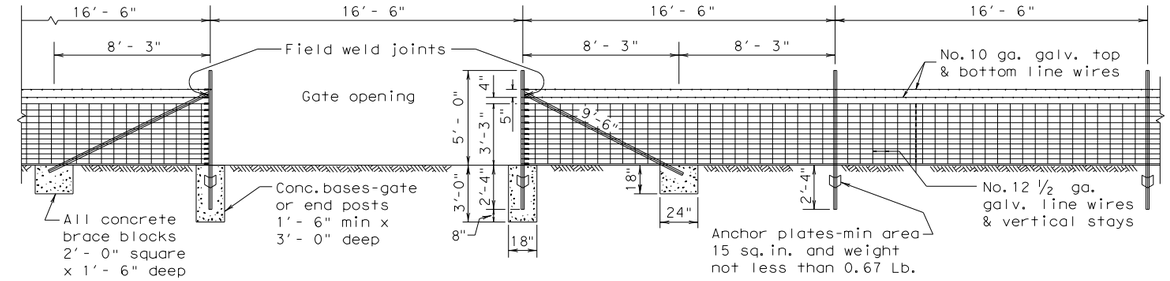

SECTION GALVANIZED WOVEN WIRE FENCE WITH METAL POSTS
BRACING DETAIL USED AT ENDS AND GATES
TYPE "D" FENCE
(See General Note 8)

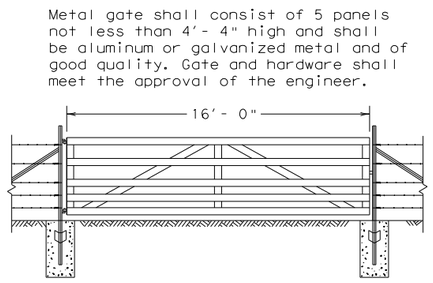

DETAIL TYPE 1 GATE

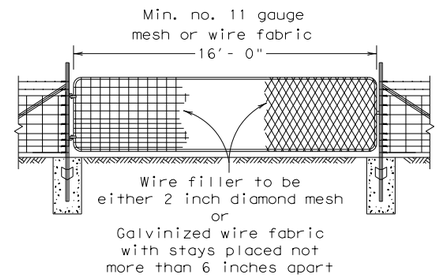

DETAIL TYPE 2 GATE

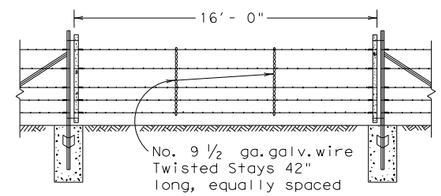

DETAIL TYPE 3 GATE

GENERAL NOTES

1. Any high point which interferes with the placing of wire mesh shall be excavated to provide a 2 inch clearance.
2. Latches for Type 1 and Type 2 gates shall be good commercial quality and design latch of the spring, fork or chain type. All latches shall be suitable to the gate and shall be approved by the Engineer.
3. Hinges for Type 2 gates shall be a commercial design approved by the Engineer suitable for post and gate.
4. Concrete shall be of the design and consistency approved by the Engineer and shall contain not less than 4 sacks of cement per cubic yard. Concrete footings are to be crowned at the top to shed water.
5. Steel anchor plates shall be of a design and thickness sufficient to prevent turning of the post in firm soil.
6. Steel pipe end posts, corner and pull posts shall be a minimum of 2" Std. pipe (2.375" O.D., 0.154" wall thickness) with a 1¼" Std. pipe brace (1.660" O.D., 0.140" wall thickness), with a 2"x2"x1/4" angle, or other as approved by the Engineer. Fasteners for securing barbed wire or woven wire fence to metal posts shall be a minimum of 11 gauge galvanized steel wire. Tubular posts shall be fitted with water malleable iron caps.
7. If Steel pipe is used for posts and braces, use standard pipe in accordance with ASTM A 53, Class B or A 501. For T-Posts use steel that meets ASTM A 702. Metal line posts shall be not less than 6′-6" in length and shall weigh not less than (1.33 lbs./lin.ft.). These Items shall be in accordance with Item 552, "Wire Fence."
8. Barbed Wire shall be in accordance with ASTM A 121, Class 1 Design designation 12-2-4-1 4R or 12-2-5-1 4R, or as approved by the Engineer.

   Woven Wire Fence (Type D) shall be in accordance with ASTM A 116, Class 1 No. 12-1/2 Grade 60 (See Table 1 ASTM A 116) to the height and design shown on the plans, or as approved by the Engineer.
9. The location of gates and corner posts will be as indicated elsewhere in these plans.

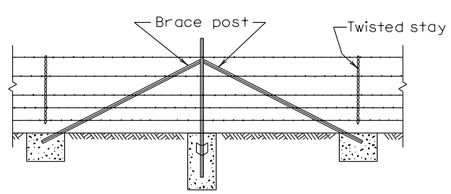

CORNER OR PULL POST ASSEMBLY

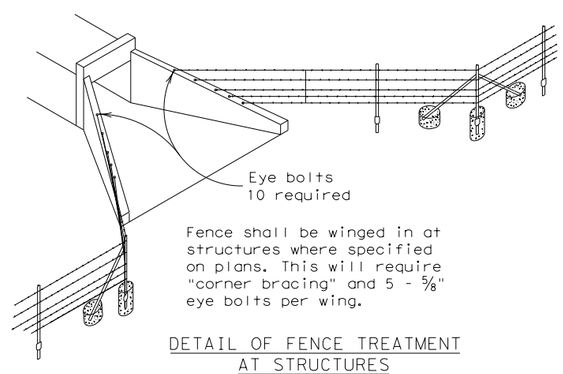

DETAIL OF FENCE TREATMENT AT STRUCTURES

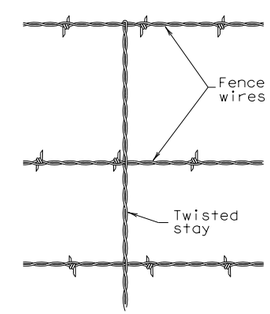

DETAIL OF STAY
(Barbed Wire Fence)

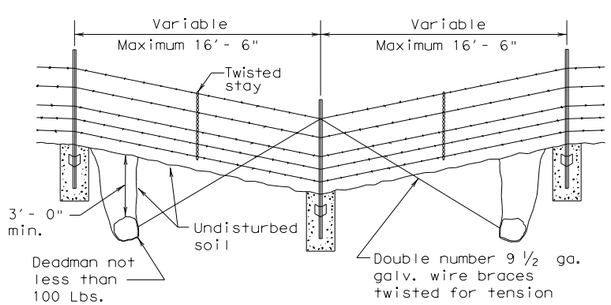

DETAIL OF FENCE SAG

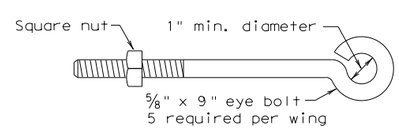

DETAIL OF EYE BOLT

Texas Department of Transportation — Design Division Standard

BARBED WIRE AND WOVEN WIRE FENCE (STEEL POSTS)

WF(2)-10

FILE: wf210.dgn	DN: TxDOT	CK: AM	DW: VP	CK:
© TxDOT 1996	CONT	SECT	JOB	HIGHWAY
REVISIONS				
	DIST	COUNTY		SHEET NO.
				229

DATE:
FILE:

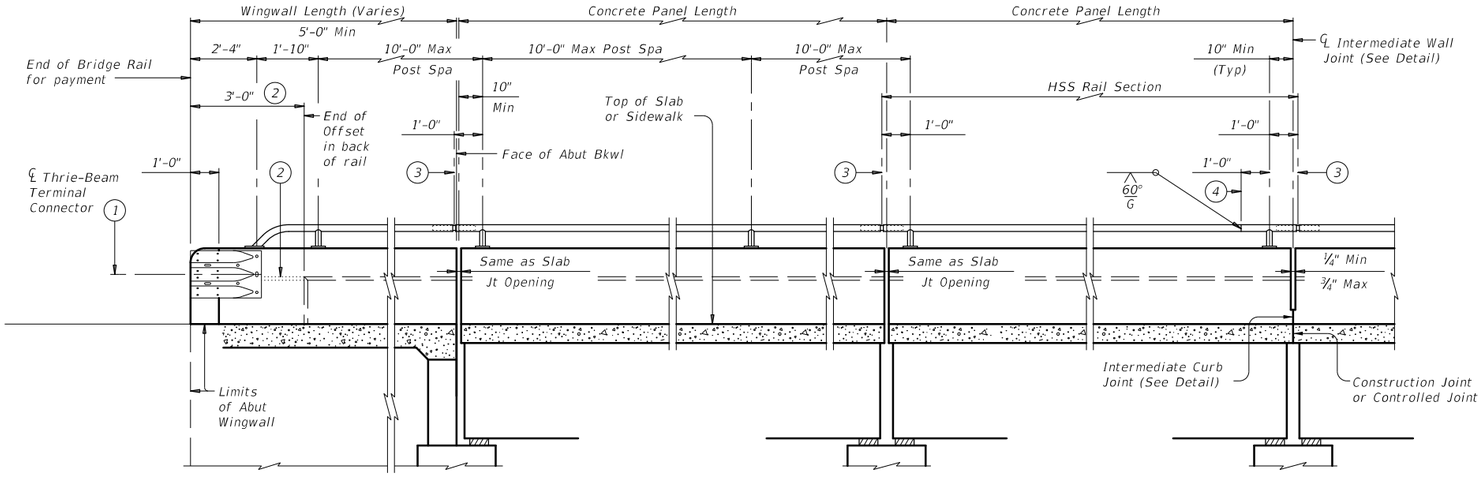

AT ABUTMENTS

AT BENTS WITH SLAB EXP JOINTS

AT BENTS WITHOUT SLAB EXP JOINTS

ROADWAY ELEVATION OF RAIL

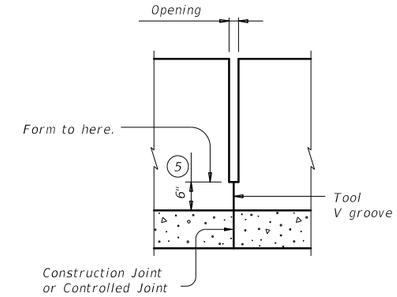

INTERMEDIATE WALL JOINT DETAIL

Provide at all interior bents without slab expansion joints. Location independent of HSS rail splices.

1. Terminal Connectors and associated hardware are to be paid for under the Item "Metal Beam Guard Fence". Attach Metal Beam Guard Fence Transitions to the bridge rail and extend along the embankment unless otherwise shown in the plans.
2. Back of rail offset may, with Engineer's approval, be continued to the end of the railing.
3. ℄ Exp Joint or Splice Joint as required.
4. One shop splice per HSS rail section is permitted with minimum 85 percent penetration. The weld may be square groove, or single vee groove. Grind smooth.
5. Increase 2" for structures with overlay.
6. Provide bolts of sufficient length to extend ½" to ¾" beyond nut.
7. Bolt recesses are only required when pedestrian sidewalks are adjacent to back of rail.
8. Place 4 additional Bars R(#4) 3'-8" in length inside Bars S(#4) and centered 2'-0" from end of rail when Terminal Connections are required. Field bend as needed.
9. HSS 2.875 x 0.203
10. HSS 2.375 x 0.154
11. ⅜" Dia Hole in bottom of HSS rail (Minimum 1 hole between posts ~ Typ)

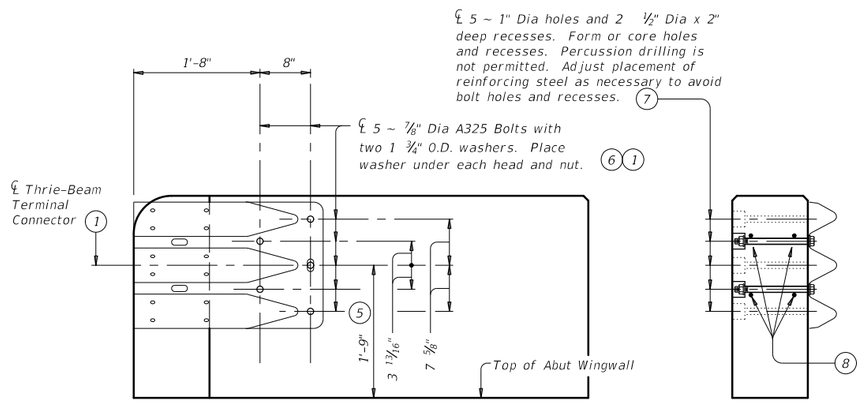

ELEVATION

SECTION

TERMINAL CONNECTION DETAILS

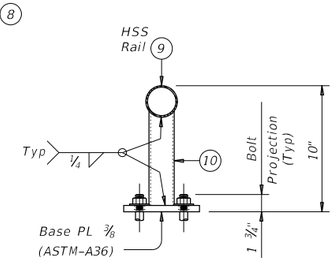

TRANSVERSE SECTION

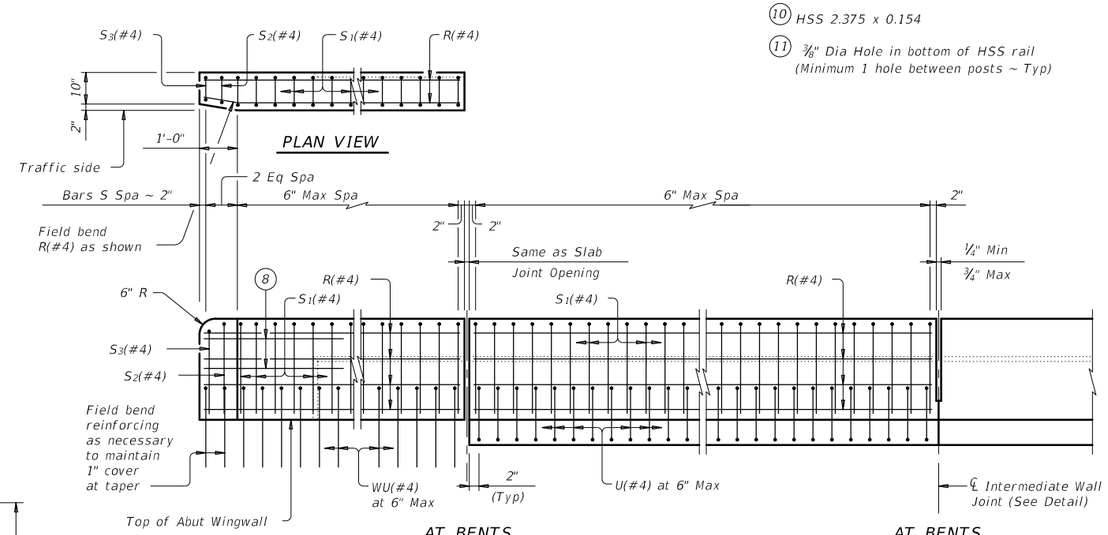

ELEVATION SHOWING TYPICAL REINFORCING PLACEMENT

(Showing without raised sidewalk)

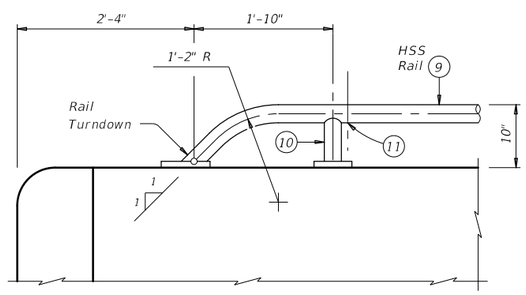

Note that at least two anchor points (as shown) are required for the Bridge Rail on the Abutment Wingwall. Longer Wingwalls may require more than two Rail anchorages.

HSS RAIL TERMINAL DETAIL

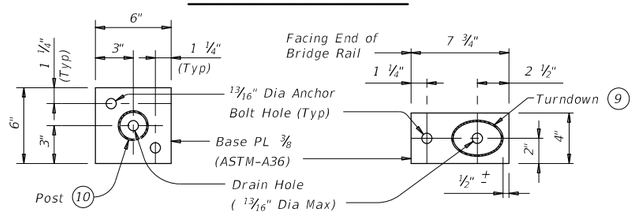

POST BASE PLATE PLAN

RAIL TURNDOWN BASE PLATE PLAN

HSS RAIL DETAILS

SHEET 1 OF 3

Texas Department of Transportation

Bridge Division Standard

COMBINATION RAIL

TYPE C221

FILE: rlstd018.dgn	DN: TxDOT	CK: TxDOT	DW: JTR	CK: JMH
©TxDOT July 2014	CONT	SECT	JOB	HIGHWAY
REVISIONS 03-16: Removed shop drawing note. Added MASH TL-3 in General Notes. Added additional epoxy classes.	DIST		COUNTY	SHEET NO. 230

DISCLAIMER:
The use of this standard is governed by the "Texas Engineering Practice Act". No warranty of any kind is made by TxDOT for any purpose whatsoever. TxDOT assumes no responsibility for the conversion of this standard to other formats or for incorrect results or damages resulting from its use.

DATE:
FILE:

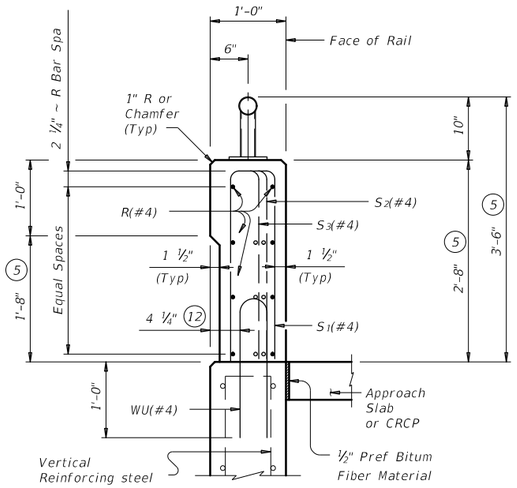

ON ABUTMENT WINGWALLS OR CIP RETAINING WALLS

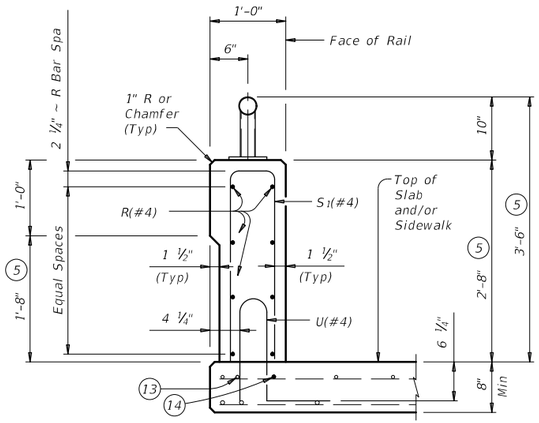

ON BRIDGE SLAB

SECTIONS THRU RAIL WITHOUT RAISED SIDEWALK

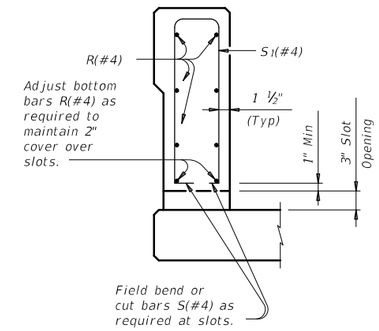

SECTION THRU OPTIONAL SIDE SLOT DRAIN

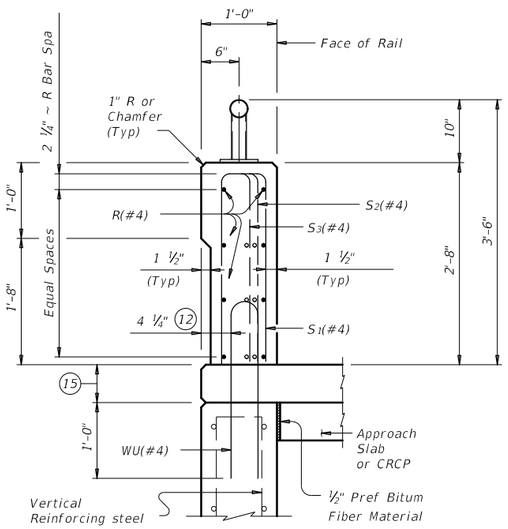

ON ABUTMENT WINGWALLS OR CIP RETAINING WALLS

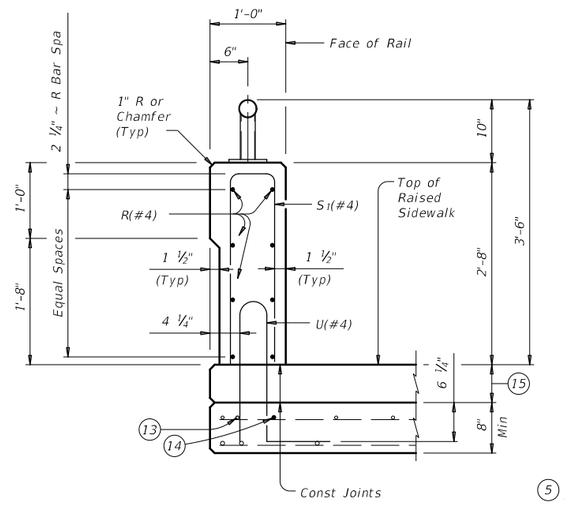

ON BRIDGE SLAB

SECTIONS THRU RAIL WITH RAISED SIDEWALK

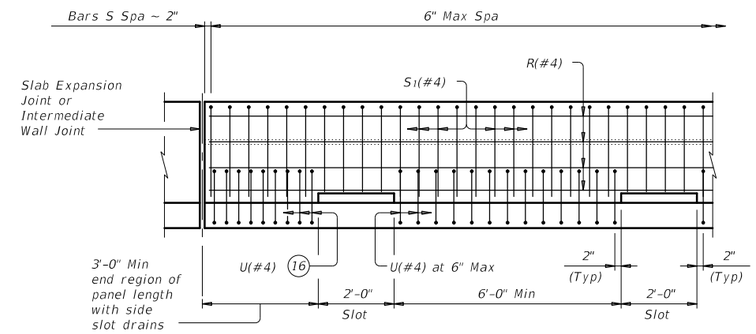

OPTIONAL SIDE SLOT DRAIN DETAIL

Note: Side Slot Drains may be used where shown elsewhere on the plans or as directed by the Engineer. Drains should not be placed over railroad tracks, lower roadways, or sidewalks. When this rail is used as a separator between a roadway surface and a sidewalk surface, side drain slots will not be permitted.

(5) Increase 2" for structures with overlay.

(12) 5 ¼" when vertical reinforcing has closer clear cover over horizontal reinforcing in abutment wingwalls or retaining walls on traffic side of wall.

(13) As an aid in supporting reinforcement, additional longitudinal bars may be used in the slab with the approval of the Engineer. Such bars must be furnished at the Contractors expense.

(14) Top longitudinal slab bar may be adjusted laterally 3" plus or minus to tie reinforcing.

(15) Raised Sidewalk

(16) Space U(#4) bars at 4" Max when end region of panel length is less than 6'-0" to side slot drain. Space U(#4) bars at 6" Max when end region of panel length is 6'-0" and greater to side slot drain.

DISCLAIMER:
The use of this standard is governed by the "Texas Engineering Practice Act". No warranty of any kind is made by TxDOT for any purpose whatsoever. TxDOT assumes no responsibility for the conversion of this standard to other formats or for incorrect results or damages resulting from its use.

DATE:
FILE:

Texas Department of Transportation — Bridge Division Standard

COMBINATION RAIL

TYPE C221

FILE: rlstd018.dgn	DN: TxDOT	CK: TxDOT	DW: JTR	CK: JMH
©TxDOT July 2014	CONT	SECT	JOB	HIGHWAY
REVISIONS 03-16: Removed shop drawing note. Added MASH TL-3 in General Notes. Added additional epoxy classes.	DIST		COUNTY	SHEET NO. 231

RAIL DATA FOR HORIZONTAL CURVES

	RADIUS TO FACE OF RAIL	MAX CHORD LENGTH	CONSTRUCT OR FABRICATE
HSS Rail	Over 2800'	29'-0"	Straight rail panels
	Over 1400' thru 2800'	14'-6"	To required radius or to chords shown
	Over 700' thru 1400'	7'-3"	
	Thru 700'	Zero	To required radius

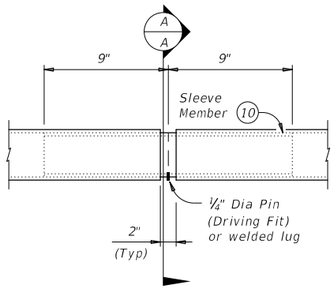

AT SPLICE OR EXP JTS

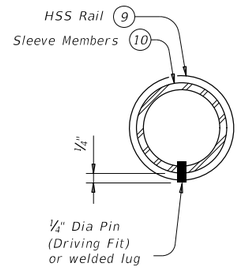

SECTION A-A

PIPE SPLICE DETAILS

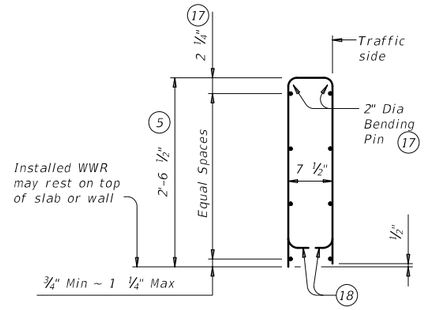

OPTIONAL WELDED WIRE REINFORCEMENT (WWR)

DESCRIPTION	LONGITUDINAL WIRES	VERTICAL WIRES
Minimum (Cumulative Total) Wire Area	1.067 Sq In.	0.267 Sq In. per Ft
	No. of Wires	Spacing
Minimum	8	4"
Maximum	10	8"
Maximum Wire Size Differential	The smaller wire must have an area of 40% or more of the larger wire.	

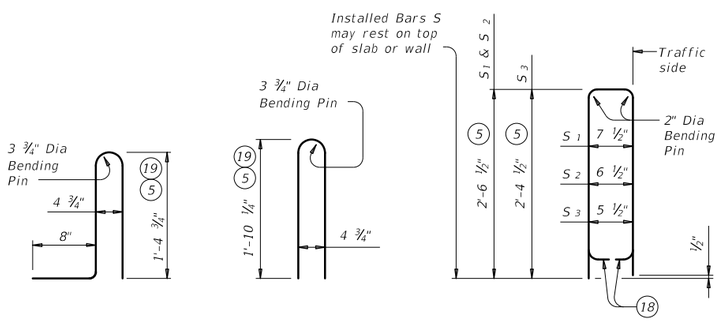

BARS U (#4) BARS WU (#4) BARS S (#4)

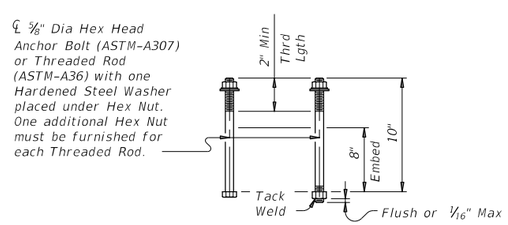

CAST-IN-PLACE ANCHOR BOLT OPTIONS (20)

(5) Increase 2" for structures with overlay.

(9) HSS 2.875 x 0.203

(10) HSS 2.375 x 0.154

(17) No longitudinal wires may be in top center of cage.

(18) Bend or cut as required to clear drain slots.

(19) For raised sidewalks, add sidewalk height to total bar height. Use sidewalk height at rail's location.

(20) See "Material Notes" for anchor bolt information.

CONSTRUCTION NOTES:

This railing may be constructed with slip-forms when approved by the Engineer, with equipment approved by the Engineer and when epoxy adhesive anchor bolts are used. Slip-forming parapet is not allowed if anchor bolts are cast with parapet wall. Provide sensor control for both line and grade. Tack welding to provide bracing for slip-form operations is acceptable. Welding can be performed at a minimum spacing of 3 ft between the cage and the anchorage. It is permissible to weld to U, WU and S bars at any location on the cage. If increased bracing is needed, additional anchorage devices must be added and welding must be performed in the upper two thirds of the cage.

Face of rail, parapet must be plumb unless otherwise approved by the Engineer. HSS rail posts must be square to the top of parapet. Use epoxy mortar under post base plates if gaps larger than 1/16" exist.

Round or chamfer exposed edges of HSS rail and HSS rail posts to approximately 1/16" by grinding.

At the contractor's option anchor bolts may be cast with the parapet (See Cast-in-Place Anchor Bolt Options).

HSS rail sections must not include less than two posts, and no more than four (except at Abutments).

Chamfer all parapet exposed corners.

MATERIAL NOTES:

Galvanize all steel components except reinforcing steel unless otherwise shown on plans.

Provide Class "C" concrete. Povide Class "C" (HPC) if required elsewhere.

Provide Grade 60 reinforcing steel.

Epoxy coat all rail reinforcement if slab bars are epoxy coated.

Deformed Welded Wire Reinforcement (WWR) (ASTM A1064) of equal size and spacing may be substituted for Bars U and WU unless noted otherwise. Deformed WWR (ASTM 1064) may be substituted for Bars R and S, as shown. Combinations of reinforcing steel and WWR or configurations of WWR other that shown are permitted if conditions in the table are satisfied. Provide the same laps as required for reinforcing bars.

Provide ASTM-A1085 or A500 Grade B or A53 Grade B for all HSS.

Anchor bolts must be ⅝" Dia ASTM A36 fully threaded rods with one hex nut and one hardened steel washer at each bolt. Embed threaded rods into parapet wall with a Type III, Class C, D, E, or F epoxy anchorage system. Minimum embedment depth is 3". Anchorage system chosen must be able to achieve an ultimate tensile resistance of 8.4 kips per bolt. The Contractor must provide evidence to the Engineer that this can be achieved. Evidence of adequate tensile resistance can be based on the manufacturer's published values of ultimate tensile strength (anchor spacing and edge distance must be accounted for). Anchor installation, including hole size, drilling, and clean-out, must be in accordance with the manufacturer's instructions.

Optional cast-in-place anchor bolts must be ⅝" Dia ASTM A307 Grade A bolts (or A36 threaded rods with one tack welded hex nut each) with one hex nut and one hardened steel washer at each bolt.

Provide bar laps, where required, as follows:

Uncoated ~ #4 = 1'-5"
Epoxy coated ~ #4 = 2'-1"

GENERAL NOTES:

This rail has been evaluated and accepted to be of equal strength to railings with like geometry, which have been crash tested to meet MASH TL-3 criteria. This rail can be used for speeds of 50 mph and greater when a TL-3 rated guard fence transition is used. When a TL-2 rated guard fence transition is used, this rail can only be used for speeds of 45 mph and less.

Do not use this railing on bridges with expansion joints providing more than 5" movement.

Rail anchorage details shown on this standard may require modification for select structure types. See appropriate details elsewhere in plans for these modifications.

Submit erection drawings showing panel lengths, rail post spacing, and anchor bolt setting to the Engineer for approval.

Average weight of railing with no overlay: 380 plf (total)
370 plf (Conc)
10 plf (Steel)

Cover dimensions are clear dimensions, unless noted otherwise.
Reinforcing bar dimensions shown are out-to-out of bar.

DISCLAIMER:
The use of this standard is governed by the "Texas Engineering Practice Act". No warranty of any kind is made by TxDOT for any purpose whatsoever. TxDOT assumes no responsibility for the conversion of this standard to other formats or for incorrect results or damages resulting from its use.

DATE:
FILE:

SHEET 3 OF 3

Texas Department of Transportation — Bridge Division Standard

COMBINATION RAIL

TYPE C221

FILE: rlstd018.dgn	DN: TxDOT	CK: TxDOT	DW: JTR	CK: JMH
©TxDOT July 2014	CONT	SECT	JOB	HIGHWAY
REVISIONS 03-16: Removed shop drawing note. Added MASH TL-3 in General Notes. Added additional epoxy classes.	DIST	COUNTY		SHEET NO. 232

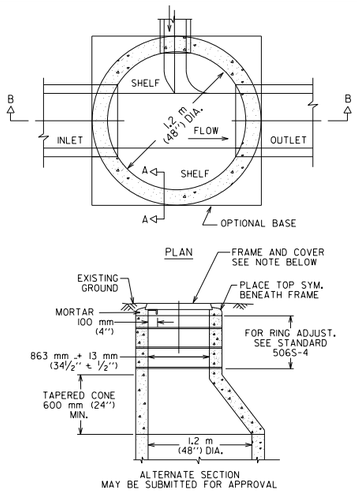

NOTE:
USE 800 mm (32") FRAME AND COVER.

MINIMUM MANHOLE DIA.	MINIMUM PIPE SIZE
1.2 m (4')	450 TO 600 mm (18 TO 24")
1.5 m (5')	750 mm TO 1.1m (30 TO 42")
1.8 m (6')	1.2 TO 1.4 m (48 TO 54")
2.1m (7')	1.5 TO 1.7 m (60 TO 66")

SIZE TO BE USED IS DEPENDENT ON DRAIN ANGLES.

CITY OF AUSTIN DEPARTMENT OF WATERSHED PROTECTION AND DEVELOPMENT REVIEW		PRE-CAST CONCRETE STORM DRAIN MANHOLE	
RECORD COPY SIGNED BY GEORGE E. OSWALD	2/14/02 ADOPTED	THE ARCHITECT/ENGINEER ASSUMES RESPONSIBILITY FOR APPROPRIATE USE OF THIS STANDARD.	STANDARD NO. 506S-3 1 OF 2

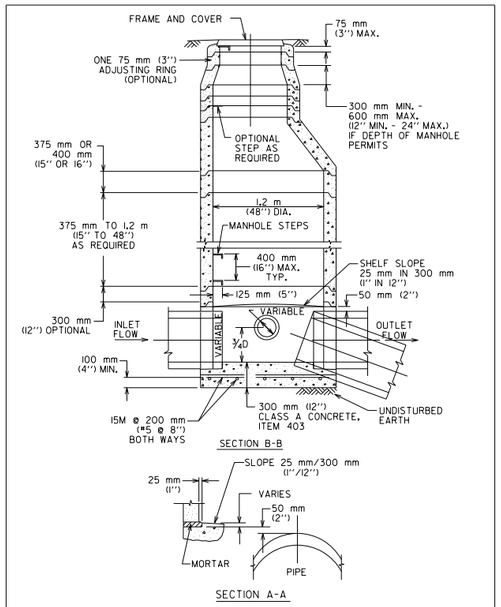

CITY OF AUSTIN DEPARTMENT OF WATERSHED PROTECTION AND DEVELOPMENT REVIEW		PRE-CAST CONCRETE STORM DRAIN MANHOLE	
RECORD COPY SIGNED BY GEORGE E. OSWALD	2/14/02 ADOPTED	THE ARCHITECT/ENGINEER ASSUMES RESPONSIBILITY FOR APPROPRIATE USE OF THIS STANDARD.	STANDARD NO. 506S-3 2 OF 2

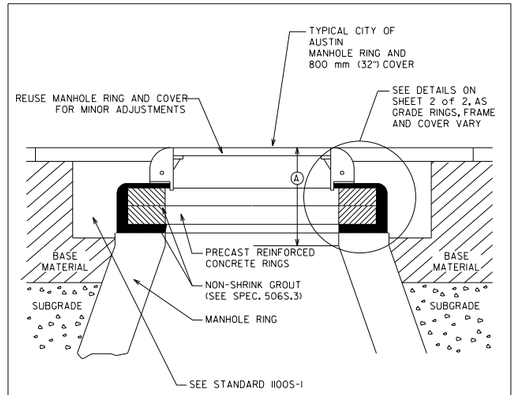

(A) VERTICAL FACE = ALLOWABLE THROAT OR CHIMNEY HEIGHT
= NEW CONSTRUCTION = 525mm = (21") Max.
= EXISTING CONSTRUCTION = 675mm (27") Max.

NOTES:
1. NON-SHRINK GROUT SHALL NOT EXCEED 25 mm (1") IN ANY DIMENSION.
2. SUB-GRADE AND BASE MATERIALS SHALL BE COMPACTED ACCORDING TO ITEMS 201S AND 210S, RESPECTIVELY, OF THE CITY OF AUSTIN STANDARD SPECIFICATIONS.
3. REFER TO STANDARD 1100S-1FOR REPAIRS AROUND MANHOLES.
4. SEE STANDARD 506S-4A FOR HDPE RING INSTALLATION (FOR USE IN PAVED AREAS ONLY).

CITY OF AUSTIN AUSTIN WATER UTILITY		MINOR MANHOLE ADJUSTMENT & NEW MANHOLE CONSTRUCTION	
RECORD COPY SIGNED BY KATHIL FLOWERS	08/31/2011	THE ARCHITECT/ENGINEER ASSUMES RESPONSIBILITY FOR APPROPRIATE USE OF THIS STANDARD.	STANDARD NO. 506S-4 1 OF 2

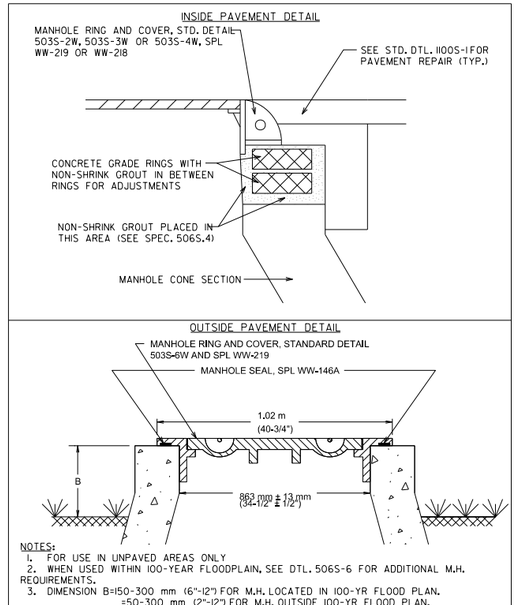

NOTES:
1. FOR USE IN UNPAVED AREAS ONLY
2. WHEN USED WITHIN 100-YEAR FLOODPLAIN, SEE DTL. 506S-6 FOR ADDITIONAL M.H. REQUIREMENTS.
3. DIMENSION B=150-300 mm (6"-12") FOR M.H. LOCATED IN 100-YR FLOOD PLAN.
=50-300 mm (2"-12") FOR M.H. OUTSIDE 100-YR FLOOD PLAN.

CITY OF AUSTIN AUSTIN WATER UTILITY		MINOR MANHOLE ADJUSTMENT & NEW MANHOLE CONSTRUCTION	
RECORD COPY SIGNED BY KATHIL FLOWERS	08/31/2011	THE ARCHITECT/ENGINEER ASSUMES RESPONSIBILITY FOR APPROPRIATE USE OF THIS STANDARD.	STANDARD NO. 506S-4 2 OF 2

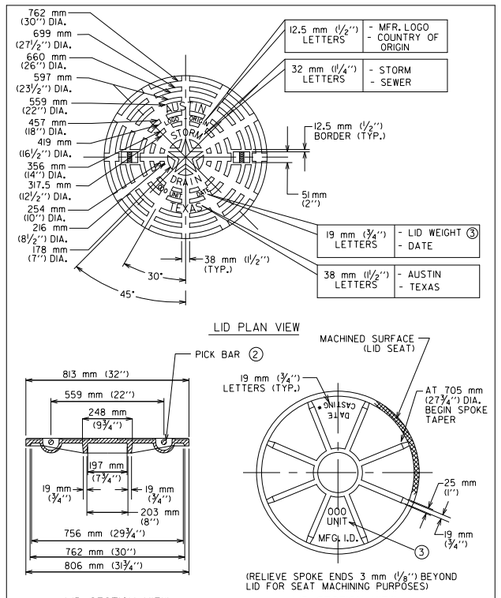

CITY OF AUSTIN DEPARTMENT OF WATERSHED PROTECTION AND DEVELOPMENT REVIEW		STORM DRAIN MANHOLE RING AND 813 mm (32") COVER	
RECORD COPY SIGNED BY GEORGE E. OSWALD	2/14/02 ADOPTED	THE ARCHITECT/ENGINEER ASSUMES RESPONSIBILITY FOR APPROPRIATE USE OF THIS STANDARD.	STANDARD NO. 503S-4S 1 OF 3

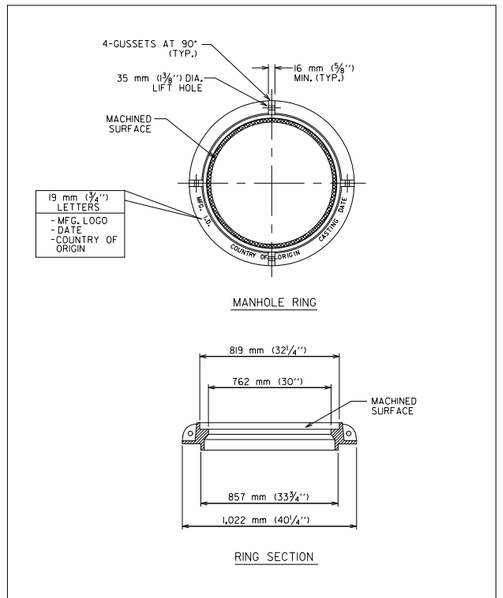

CITY OF AUSTIN DEPARTMENT OF WATERSHED PROTECTION AND DEVELOPMENT REVIEW		STORM DRAIN MANHOLE RING AND 813 mm (32") COVER	
RECORD COPY SIGNED BY GEORGE E. OSWALD	2/14/02 ADOPTED	THE ARCHITECT/ENGINEER ASSUMES RESPONSIBILITY FOR APPROPRIATE USE OF THIS STANDARD.	STANDARD NO. 503S-4S 2 OF 3

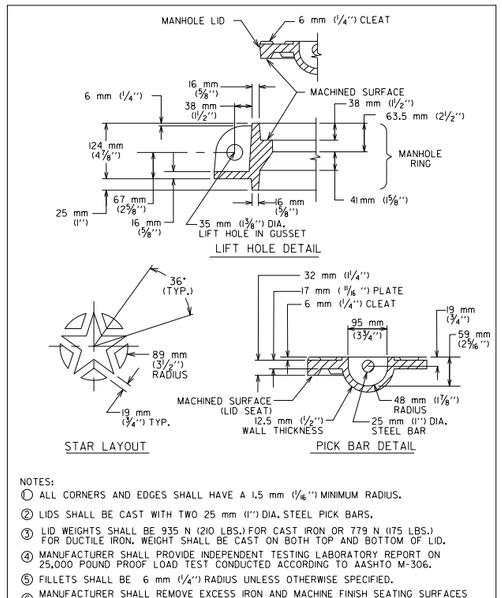

NOTES:
① ALL CORNERS AND EDGES SHALL HAVE A 1.5 mm (1/16") MINIMUM RADIUS.
② LIDS SHALL BE CAST WITH TWO 25 mm (1") DIA. STEEL PICK BARS.
③ LID WEIGHTS SHALL BE 935 N (210 LBS.) FOR CAST IRON OR 779 N (175 LBS.) FOR DUCTILE IRON. WEIGHT SHALL BE CAST ON BOTH TOP AND BOTTOM OF LID.
④ MANUFACTURER SHALL PROVIDE INDEPENDENT TESTING LABORATORY REPORT ON 25,000 POUND PROOF LOAD TEST CONDUCTED ACCORDING TO AASHTO M-306.
⑤ FILLETS SHALL BE 6 mm (¼") RADIUS UNLESS OTHERWISE SPECIFIED.
⑥ MANUFACTURER SHALL REMOVE EXCESS IRON AND MACHINE FINISH SEATING SURFACES TO NOTED DIMENSIONS.

CITY OF AUSTIN DEPARTMENT OF WATERSHED PROTECTION AND DEVELOPMENT REVIEW		STORM DRAIN MANHOLE RING AND 813 mm (32") COVER	
RECORD COPY SIGNED BY GEORGE E. OSWALD	2/14/02 ADOPTED	THE ARCHITECT/ENGINEER ASSUMES RESPONSIBILITY FOR APPROPRIATE USE OF THIS STANDARD.	STANDARD NO. 503S-4S 3 OF 3

NOTES:

1. ALL MANHOLE AND INLET COVERS SHALL READ: "CITY OF CEDAR PARK".

NUMBER	DATE	REVISION	APPROVED

CEDAR PARK

Binkley & Barfield, Inc
consulting engineers
Texas Registration Number F-257

ANDERSON MILL ROAD
GASPAR BEND TO WHITESTONE BLVD
STANDARD DETAILS STORMWATER

DESIGN BY: GCC DRAWN BY: DSH CHECKED BY: DRE APPROVED BY: BDR PROJECT NO: 156402 DATE: 10/6/2016	SCALE: N/A SHEET: PAGE: 233	

10/6/2016
8:51:01 AM
...\CADD\SHEETS\DRSD1*AM*01.dgn

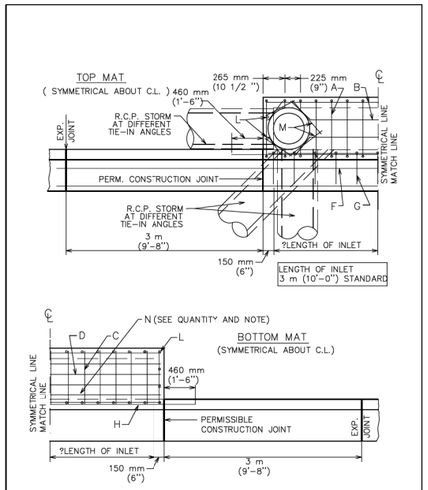

NOTE: INSTALL ALMETEK 4" DISC "NO DUMPING DRAINS TO WATERWAY" MARKER

CITY OF CEDAR PARK DEPARTMENT OF PUBLIC WORKS		TYPICAL DETAILS FOR CURB INLET	
	12/03/09 ADOPTED	THE ARCHITECT/ENGINEER ASSUMES RESPONSIBILITY FOR APPROPRIATE USE OF THIS STANDARD.	STANDARD NO. 1 OF 4

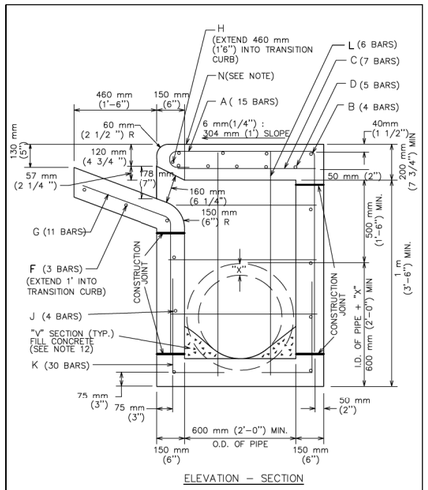

ELEVATION – SECTION

NOTE: INSTALL ALMETEK 4" DISC "NO DUMPING DRAINS TO WATERWAY" MARKER

CITY OF CEDAR PARK DEPARTMENT OF PUBLIC WORKS		TYPICAL DETAILS FOR CURB INLET	
	12/03/09 ADOPTED	THE ARCHITECT/ENGINEER ASSUMES RESPONSIBILITY FOR APPROPRIATE USE OF THIS STANDARD.	STANDARD NO. 2 OF 4

TABLE OF QUANTITIES
FOR 18" OUTLET PIPE
REINFORCING STEEL QUANTITIES

BARS	SIZE	SPACING	NUMBER	LENGTH	WEIGHT
A	4	230mm (9")*	15	2 m (7'-0")	73
B	4	250 mm (10")	4	3.25 m (10'-8")	29
C	4	460 mm (18")	7	760 mm (2'-6")	12
D	6	150 mm (6")	5	3.25 m (10'-8")	80
E	4	300 mm (12")	6	760 mm (2'-6")	10
F	4	250 mm (10")	3	4 m (13'-0")	35
G	4	300 mm (12")	11	1.25 m (4'-3")	31
H	6	–	1	4.25 m (14'-0")	20
J	4	300 mm (12")	7	3.25 m (10'-8")	50
K	4	230 mm (9")*	30	800 mm (2'-7 1/2")	52
L	4	300 mm (12")*	6	1.3 m (4'-4")	17
M	4		4	500 mm (1'-8") AVG	4
N	ALMETEK 4" DISC "NO DUMPING DRAINS TO WATERWAY" MARKER MODEL SD-SP, SQUARE HOLE OPTION, SYMBOL: FISH, COLOR: BLUE. USE ALMETEK SPECS FOR THEFT RESISTANT RIVET SURFACE MOUNT W/ ADHESIVE FOR DRY CONCRETE INSTALLATION.				
TOTAL STEEL, LB.					413
TOTAL CONCRETE, C.Y.					4.06

* EXCEPT AS SHOWN ON PLAN

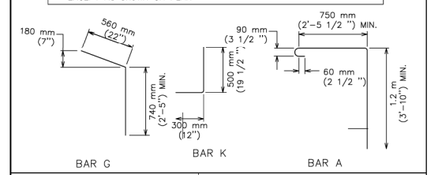

CITY OF CEDAR PARK DEPARTMENT OF PUBLIC WORKS		TYPICAL DETAILS FOR CURB INLET	
	12/03/09 ADOPTED	THE ARCHITECT/ENGINEER ASSUMES RESPONSIBILITY FOR APPROPRIATE USE OF THIS STANDARD.	STANDARD NO. 3 OF 4

NOTES:
1. ALL CONCRETE SHALL BE CLASS "A"
2. ALL REINFORCING STEEL SHALL BE GRADE 60
3. DIMENSIONS RELATING TO REINFORCING STEEL ARE TO CENTERS OF BARS.
4. VERTICAL STEEL MAY BE SPLICED (380 mm or 15" MIN. LAP) IN THE LOWER ONE-HALF OF ALL INLET WALLS.5. IN AREAS OF CONFLICT BETWEEN REINFORCING STEEL, PIPES AND MANHOLE FRAME, THE REINFORCEMENT SHALL BE BENT OR ADJUSTED TO CLEAR AS DIRECTED BY THE ENGINEER.
6. QUANTITIES SHOWN HEREON ARE FOR THE CONTRACTOR'S INFORMATION ONLY. PAYMENT WILL BE MADE FOR EACH INLET OF THE TYPE SPECIFIED, COMPLETE IN PLACE INCLUDING MANHOLE FRAME AND OVER.
7. CHAMFER ALL EXPOSED EDGES 20 mm (3/4 ").
8. MANHOLE FRAME AND COVER SHALL BE IN ACCORDANCE WITH CITY OF AUSTIN STANDARD 503S-1.
9. THE CONTRACTOR MAY PROPOSE ALTERNATE PROCEDURES FOR THE CONSTRUCTION OF INLETS, INCLUDING PRECAST UNITS. PLANS FOR SUCH PROPOSED ALTERNATES SHALL BE SUBMITTED TO THE ENGINEER FOR REVIEW AND APPROVAL BEFORE CONSTRUCTION.
10. ALL INLET WALLS SHALL BE FORMED EXCEPT WHERE THE NATURE OF THE SURROUNDING MATERIAL IS SUCH THAT IT CAN BE TRIMMED TO A SMOOTH VERTICAL FACE. WHEN INLET WALLS ARE PLACED TO NEAT EXCAVATION LINES THE WALL THICKNESS SHALL NOT EXCEED 10 INCHES.
11. PAYMENT FOR INLET AT THE CONTRACT PRICE SHALL INCLUDE THE TRANSITION CURB.
12. INVERT OF INLET SHALL BE SLOPED 1:20 WITH FILL CONCRETE, SHAPED AS "V" SECTION
13. NO SPLICING OF REINFORCING STEEL SHALL BE PERMITTED UNLESS OTHERWISE NOTED ON THE PLANS OR PERMITTED IN WRITING BY THE ENGINEER.
14. INSTALL ALMETEK 4" DISC "NO DUMPING DRAINS TO WATER" MARKER, MODEL SD-SP, SQUARE OPTION, SYMBOL: FISH, COLOR: BLUE. USE ALMETEK INSTALL SPECIFICATIONS FOR THEFT RESISTANT RIVET SURFACE MOUNT W/ADHESIVE FOR DRY CONCRETE INSTALL.

REFERENCES:

FOR EXPANSION JOINT DOWEL AND DOWEL LOCATION DETAILS
SEE STD. 430S-3, "CURB EXPANSION JOINT DOWEL DETAIL".

FOR 18" MANHOLE FRAME AND COVER DETAILS
SEE STD. 503S-1, "18" COVER AND FRAME".

ALMETEK "NO DUMPING DRAINS TO WATERWAY" MARKERS
WWW.ALMETEK.COM

CITY OF CEDAR PARK DEPARTMENT OF PUBLIC WORKS		TYPICAL DETAILS FOR CURB INLET	
	12/03/09 ADOPTED	THE ARCHITECT/ENGINEER ASSUMES RESPONSIBILITY FOR APPROPRIATE USE OF THIS STANDARD.	STANDARD NO. 4 OF 4

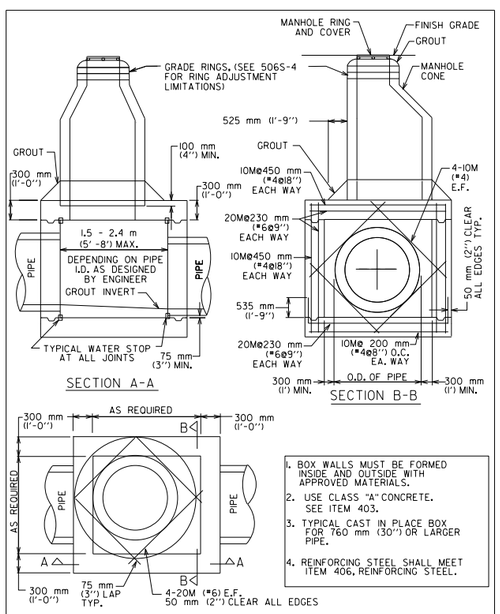

1. BOX WALLS MUST BE FORMED INSIDE AND OUTSIDE WITH APPROVED MATERIALS.
2. USE CLASS "A" CONCRETE. SEE ITEM 403.
3. TYPICAL CAST IN PLACE BOX FOR 760 mm (30") OR LARGER PIPE.
4. REINFORCING STEEL SHALL MEET ITEM 406, REINFORCING STEEL.

CITY OF AUSTIN WATER AND WASTEWATER UTILITY		TYPICAL BOX MANHOLE 760 mm (30") & LARGER PIPE	
RECORD COPY SIGNED BY KATHI L. FLOWERS	2/17/00 ADOPTED	THE ARCHITECT/ENGINEER ASSUMES RESPONSIBILITY FOR APPROPRIATE USE OF THIS STANDARD.	STANDARD NO. 506S-5

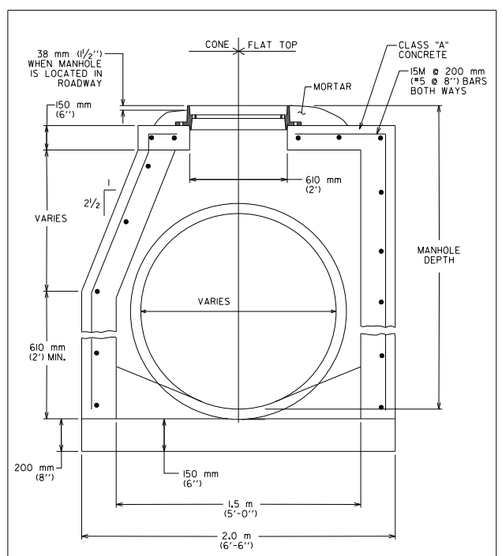

CITY OF AUSTIN DEPARTMENT OF WATERSHED PROTECTION AND DEVELOPMENT REVIEW		STORM DRAIN MANHOLE DETAIL	
RECORD COPY SIGNED BY GEORGE E. OSWALD	2/14/02 ADOPTED	THE ARCHITECT/ENGINEER ASSUMES RESPONSIBILITY FOR APPROPRIATE USE OF THIS STANDARD.	STANDARD NO. 506S-11

NOTES:

1. ALL MANHOLE AND INLET COVERS SHALL READ: "CITY OF CEDAR PARK".

NUMBER	DATE	REVISION	APPROVED

CEDAR PARK

Binkley & Barfield, Inc
consulting engineers
Texas Registration Number F-257

ANDERSON MILL ROAD
GASPAR BEND TO WHITESTONE BLVD
STANDARD DETAILS STORMWATER

DESIGN BY: GCC DRAWN BY: DSH CHECKED BY: DRE APPROVED BY: BDR PROJECT NO: 156402 DATE: 10/6/2016	SCALE: N/A	
	SHEET:	
	PAGE: 234	

10/6/2016
8:51:02 AM
...\CADD\SHEETS\DRSD1*AM*02.dgn

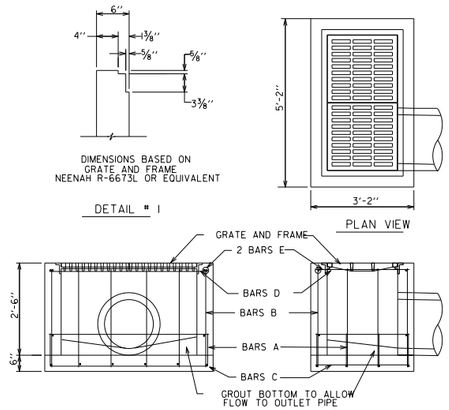

REINFORCING STEEL SCHEDULE					
BAR	QTY	SIZE	SPACING	LENGTH	WEIGHT
A	4	4	12"	6'-8"	18
B	16	4	12"	3'-0"	32
C	8	4	12"	2'-10"	15
D	4	4	12"	5'-2"	14
E	4	5	12"	2'-10"	12
TOTAL WEIGHT---91 LB.					

CITY OF AUSTIN DEPARTMENT OF WATERSHED PROTECTION AND DEVELOPMENT REVIEW		STANDARD DROP INLET	
RECORD COPY SIGNED BY ALLEN BRECHER	5/24/88	THE ARCHITECT/ENGINEER ASSUMES RESPONSIBILITY FOR APPROPRIATE USE OF THIS STANDARD.	STANDARD NO. 508-11
ADOPTED			

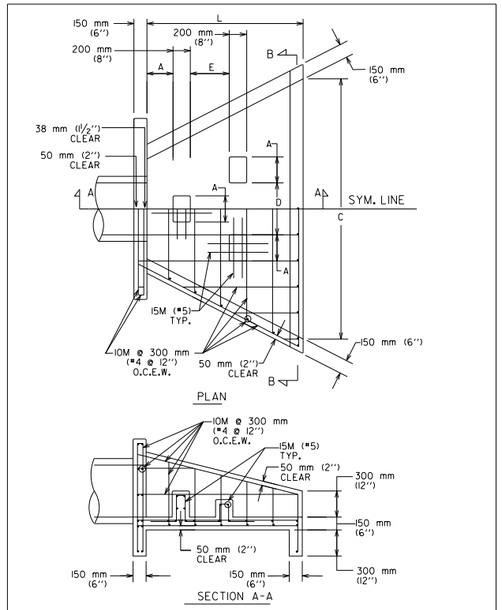

CITY OF AUSTIN DEPARTMENT OF WATERSHED PROTECTION AND DEVELOPMENT REVIEW		STANDARD HEADWALL AND ENERGY DISSIPATORS	
RECORD COPY SIGNED BY BILL GARDNER	08/20/07	THE ARCHITECT/ENGINEER ASSUMES RESPONSIBILITY FOR APPROPRIATE USE OF THIS STANDARD.	STANDARD NO. 508S-13 1 OF 2
ADOPTED			

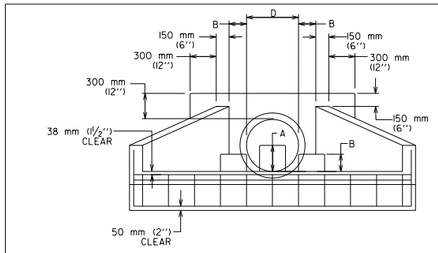

SECTION B-B

NOTES:

1. ALL CONCRETE SHALL BE TYPE "C" AS PER SPEC. 403S, CONCRETE FOR STURCTURES.
2. CHAMFER ALL EXTERNAL VISIBLE CORNERS.
3. DISSIPATOR BLOCKS REQUIRED ON DISCHARGE HEADWALLS ONLY.

D	457 mm (18")	533 mm (21")	610 mm (24")	685 mm (27")	765 mm (30")	838 mm (33")	914 mm (36")	1.067 m (42")	1.219 m (48")	1.372 m (54")	1.524 m (60")
A	225 mm (9")	250 mm (10")	300 mm (12")	350 mm (14")	375 mm (15")	400 mm (16")	450 mm (18")	525 mm (21")	600 mm (24")	675 mm (27")	750 mm (30")
B	150 mm (6")	175 mm (7")	200 mm (8")	225 mm (9")	250 mm (10")	275 mm (11")	300 mm (12")	350 mm (14")	400 mm (16")	450 mm (18")	500 mm (20")
C	2.29 m (90")	2.67 m (105")	3.05 m (120")	3.43 m (135")	3.81m (150")	4.19 m (165")	4.57 m (180")	5.33 m (210")	6.10 m (240")	6.86 m (270")	7.62 m (300")
L	1.37 m (54")	1.60 m (63")	1.83 m (72")	2.06 m (81")	2.29 m (90")	2.51m (99")	2.74 m (108")	3.20 m (126")	3.66 m (144")	4.11m (162")	4.57 m (180")
E	300 mm (12")	350 mm (14")	400 mm (16")	450 mm (18")	500 mm (20")	550 mm (22")	600 mm (24")	700 mm (28")	800m (32")	900 mm (36")	1000 mm (40")

DIMENSIONS IN MILLIMETERS, METERS AND (INCHES).

DISCHARGE VELOCITIES GREATER THAN 3 METERS/SECOND (10 fps) REQUIRE ROCK OUTLET PROTECTION.

CITY OF AUSTIN DEPARTMENT OF WATERSHED PROTECTION AND DEVELOPMENT REVIEW		STANDARD HEADWALL AND ENERGY DISSIPATORS	
RECORD COPY SIGNED BY BILL GARDNER	08/20/07	THE ARCHITECT/ENGINEER ASSUMES RESPONSIBILITY FOR APPROPRIATE USE OF THIS STANDARD.	STANDARD NO. 508S-13 2 OF 2
ADOPTED			

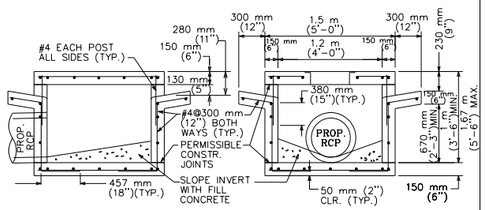

ELEVATION–SECTION A–A

ELEVATION–SECTION B–B

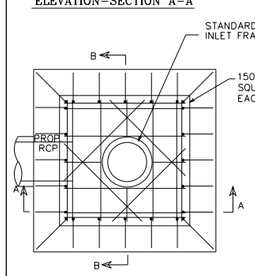

PLAN

NOTES:

1. CHAMFER ALL EXPOSED EDGES 20 mm (3/4").
2. REINFORCING STEEL SHALL BE CUT OR FIELD-BENT AS REQUIRED TO CLEAR PIPE AND INLET FRAME OPENING. ALL CUT STEEL SHALL BE REPLACED WITH ADDITIONAL DIAGONAL BARS OF THE SAME DIAMETER.
3. INLET FRAME AND COVER SHALL BE IN ACCORDANCE WITH CITY OF AUSTIN STANDARD 503S-1.
4. CONCRETE COVERAGE OF STEEL SHALL BE 50 mm (2") MIN. AT ALL SURFACES.

CITY OF AUSTIN WATERSHED PROTECTION DEPARTMENT		4-SIDED AREA INLET	
RECORD COPY SIGNED BY ARTHUR C. ROMERO	08/18/2010	THE ARCHITECT/ENGINEER ASSUMES RESPONSIBILITY FOR APPROPRIATE USE OF THIS STANDARD.	STANDARD NO. 508S-9
ADOPTED			

NOTES:

1. ALL MANHOLE AND INLET COVERS SHALL READ: "CITY OF CEDAR PARK".

NUMBER	DATE	REVISION	APPROVED

CEDAR PARK

Binkley & Barfield, Inc
consulting engineers
Texas Registration Number F-257

ANDERSON MILL ROAD
GASPAR BEND TO WHITESTONE BLVD
STANDARD DETAILS STORMWATER

DESIGN BY:	GCC	SCALE: N/A
DRAWN BY:	DSH	
CHECKED BY:	DRE	
APPROVED BY:	BDR	SHEET:
PROJECT NO:	156402	
DATE:	10/6/2016	PAGE: 235

10/6/2016
8:51:05 AM
...\CADD\SHEETS\DRSD1*AM*03.dgn

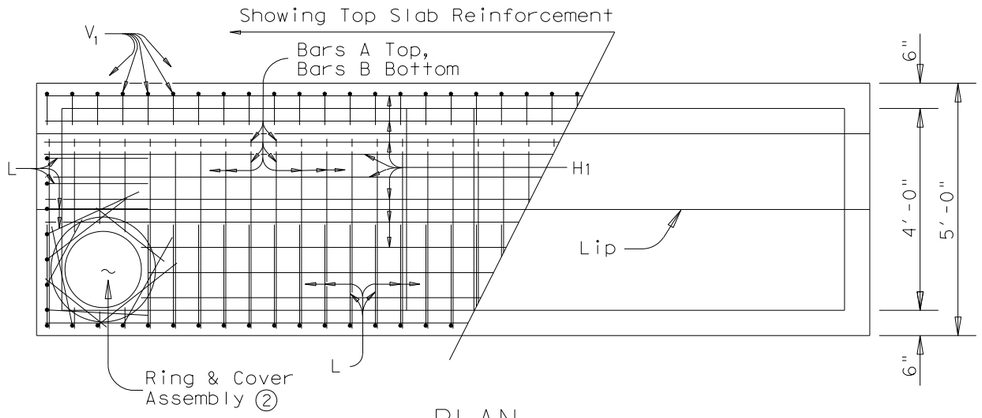

PLAN

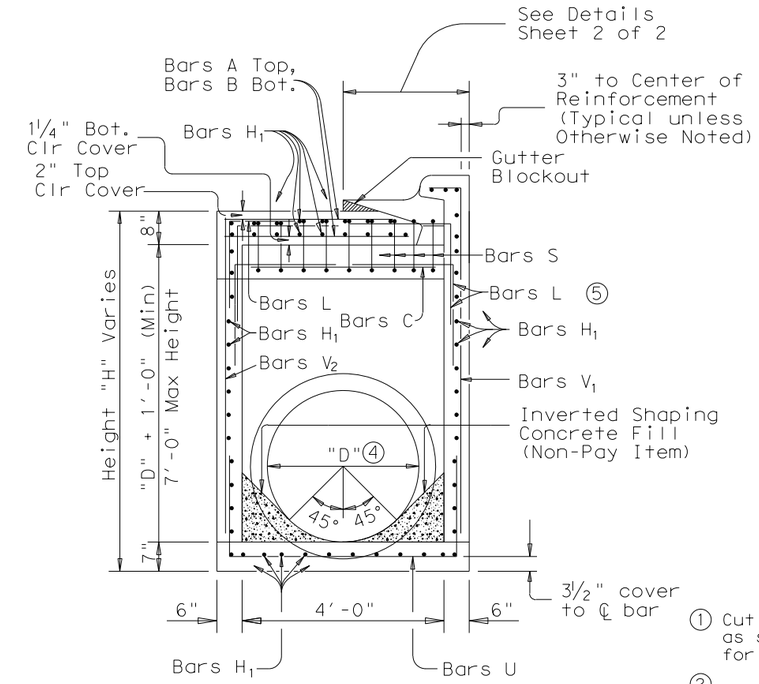

SECTION A-A

① Cut bars H_2 & V_3 as shown. Allow 3" for End Cover (Typical).

② Place bars L with Bars A, H, and V as shown at RCP, corners and Manhole Assembly. Place Manhole ring such that interior opening aligns with inside faces of two corner walls. Place 4 ~ #4 Bars as shown in Plan View around Ring Assembly to engage cut slab Bars A, B & H_1.

③ Cut bars H_1 and end bar U as Required to accommodate pipe inset in Bottom Slab.

④ "D" = Pipe Diameter

⑤ Align Bars L with Beam Reinforcement Bars C and Top Slab Reinforcement Bars A (12 Bars L Total) at ends of transverse slab beam.

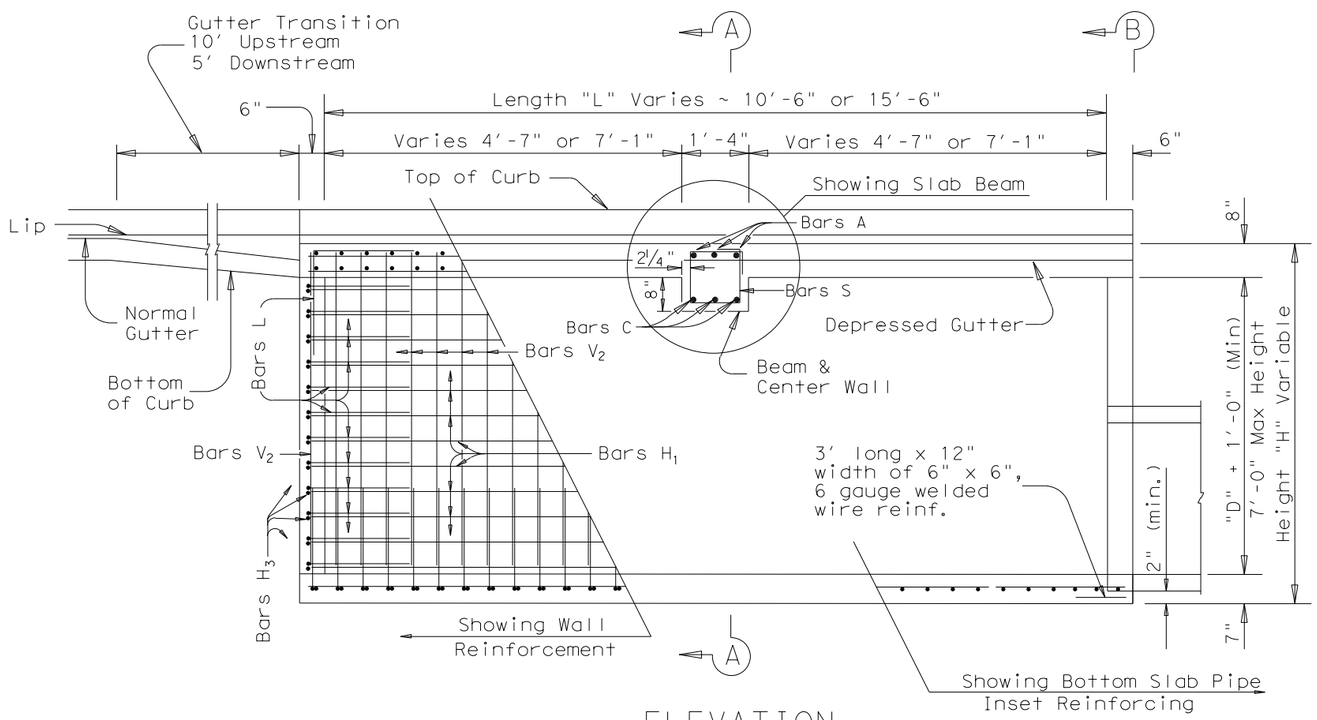

ELEVATION

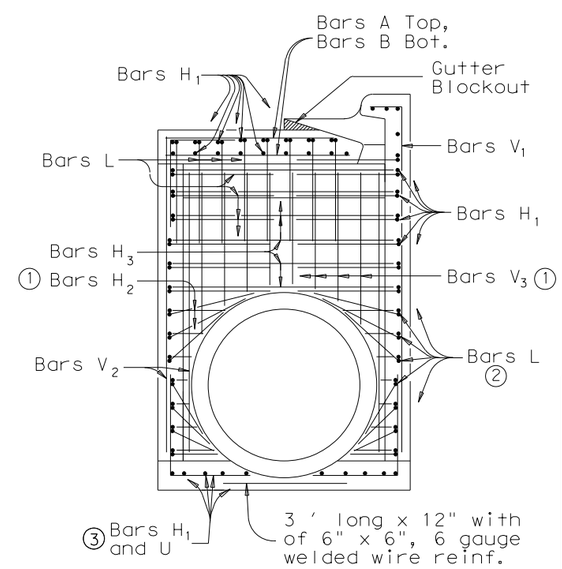

END VIEW B-B

HS20 LOADING

Texas Department of Transportation
Austin District Design

CURB INLET DETAILS

TYPE IR & IIR

(FOR 36" DIA. RCP & SMALLER)

Austin District Standard

© TxDOT 2002

REVISIONS	DISTRICT	FEDERAL AID PROJECT			SHEET
9/04 2004 Update	14				236
10/08 Rev. Blockout Detail	COUNTY		CONTROL	SECT	JOB	HIGHWAY
04/09 Remove Reinf. Lug					

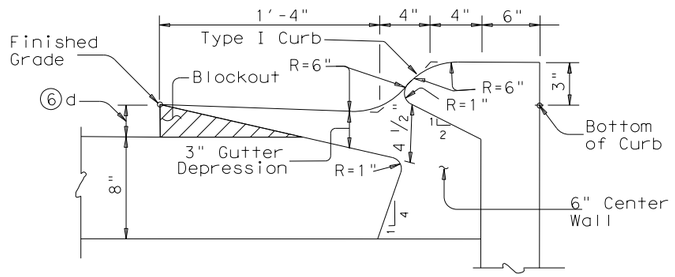

THROAT DETAILS TYPE IR INLETS

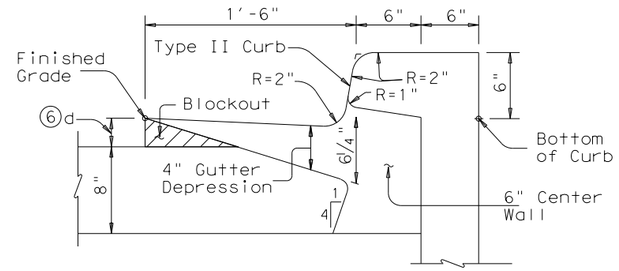

THROAT DETAILS TYPE IIR INLETS

BAR TABLE		
BAR	SIZE	MAX. SPA.
A	#5	5"
B	#5	5"
C	#8	As Shown
H_1	#5	6"
H_2	#5	6"
H_3	#5	6"
L	#5	6"
S	#4	5"
U	#5	6"
V_1	#5	6"
V_2	#5	6"
V_3	#5	6"
W	#5	6"

⑥ "d" = Depth of Overlay.

GENERAL NOTES:

Use Class "C" concrete for inlet box bottom and walls; use Class "S" concrete for inlet box top.

Ring and cover must meet requirements of AASHTO M306, "Standard Specification for Drainage Structure Castings". Materials shall conform to ASTM A48, Class 35B for gray iron castings or ASTM A536, Grade 65-45-12 for ductile iron castings. Aluminum alloy castings will not be permitted. Consider ring and cover subsidiary to the pertinent Item.

If two inlets are to be installed end to end, install equivalent opening or pipe segment in end walls between boxes. Each end wall between inlet boxes will be reinforced as shown for single box.

Build inlets in stages so that base laying operations may be continuous over the top of the inlet. Backfill any additional excavation required below finished base grade within roadway limits with Class "B" Conc (Riprap).

Consider work or materials involved for inlet stage construction subsidiary to the pertinent Items.

Ensure connecting pipes enter within 10 degrees of normal to inlet wall. If necessary, use pipe elbow or curved approach alignment to stay within this limit.

Provide gutter blockout(s) for the length of each inlet for temporary drainage. Fill blockout(s) after final roadway paving. Consider this work subsidiary to pertinent Item.

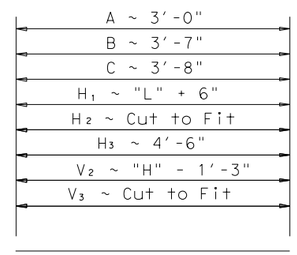

BARS A, B, C, H_1, H_2, H_3, V_2, & V_3

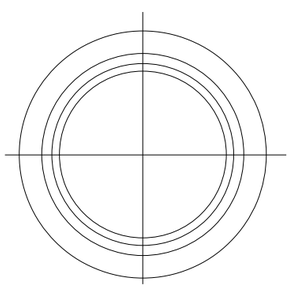

TOP VIEW

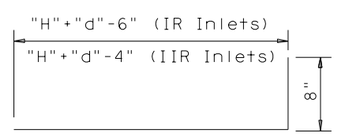

BARS V_1

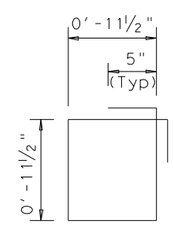

BARS S

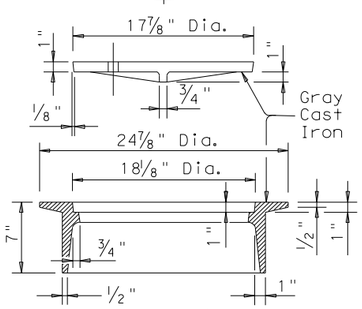

Approximate Weight 240 lbs.

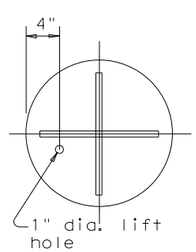

BOTTOM VIEW

04/09 Remove Reinf. Lug

RING AND COVER DETAILS

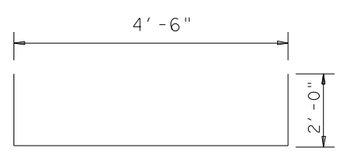

BARS U

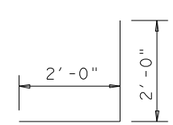

BARS L

HS20 LOADING

Sheet 2 of 2

Texas Department of Transportation
Austin District Design

CURB INLET DETAILS TYPE IR & IIR (FOR 36" DIA. RCP & SMALLER)

Austin District Standard

© TxDOT Aug. 2002

REVISIONS
9/04 2004 Update
10/08 Rev. Lip Dimension
04/09 Remove Reinf. Lug

DISTRICT	FEDERAL AID PROJECT				SHEET
14					237
COUNTY		CONTROL	SECT	JOB	HIGHWAY

CI-TY1R-TY2R-A-09.dgn

DISCLAIMER:
The use of this standard is governed by the "Texas Engineering Practice Act". No warranty of any kind is made by TxDOT for any purpose whatsoever. TxDOT assumes no responsibility for the conversion of this standard to other formats or for incorrect results or damages resulting from its use.

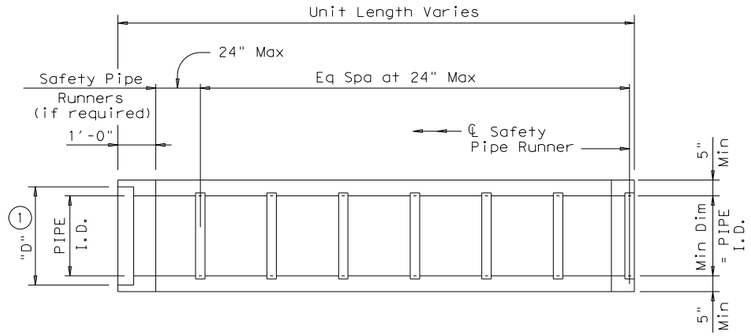

PLAN

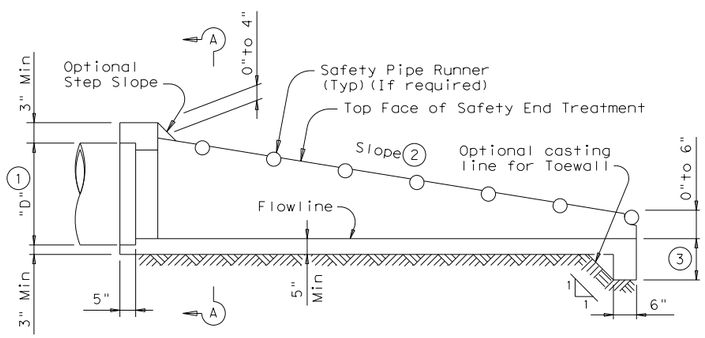

LONGITUDINAL ELEVATION

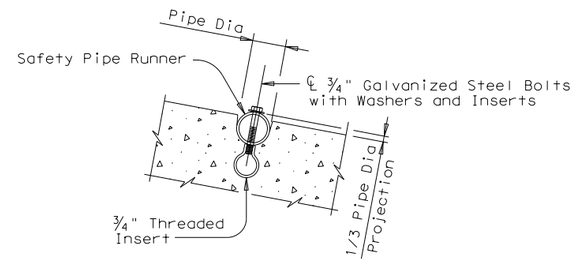

INSTALLATION DETAIL FOR SAFETY PIPE RUNNERS

(If required)

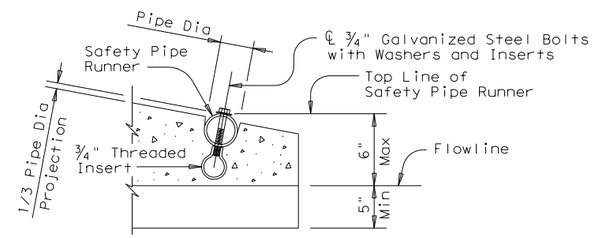

OPTION A

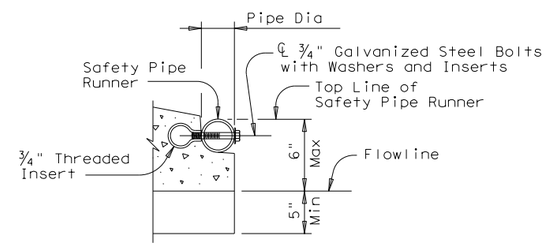

OPTION B

END DETAILS FOR INSTALLATION OF SAFETY PIPE RUNNERS

(If required)

PIPE I.D.	PIPE WALL "B" THICKNESS	"D" (1)	MAXIMUM SLOPE	MINIMUM LENGTH OF UNIT	PIPE RUNNERS REQUIRED		REQUIRED PIPE RUNNER SIZES		
					SINGLE PIPE	MULTIPLE PIPE	NOMINAL DIA.	O.D.	I.D.
12"	2"	17"	6:1	4'-9"	No	Yes, for >2 pipes	3" STD	3.500"	3.068"
15"	2 ¼"	20 ½"	6:1	6'-5"	No	Yes, for >2 pipes	3" STD	3.500"	3.068"
18"	2 ½"	24"	6:1	8'-0"	No	Yes, for >2 pipes	3" STD	3.500"	3.068"
24"	3"	31"	6:1	11'-3"	No	Yes, for >2 pipes	3" STD	3.500"	3.068"
30"	3 ½"	38 ½"	6:1	14'-8"	No	Yes	4" STD	4.500"	4.026"
36"	4"	45 ½"	6:1	17'-11"	Yes	Yes	4" STD	4.500"	4.026"
42"	4 ½"	52 ½"	6:1	21'-2"	Yes	Yes	4" STD	4.500"	4.026"

(1) Dimension "D" is based on ASTM C-76, Class III, Wall "B" thickness. If any other wall thickness is used, dimension "D" must be adjusted accordingly.

(2) Slope as shown elsewhere in the plans. Slope of 6:1 or flatter is required for vehicle safety.

(3) Toewall to be used only when dimension is shown elsewhere in the plans.

(4) The top 4" of void between Precast End Treatments shall be filled with concrete Riprap and shall be considered subsidiary to Safety End Treatment.

(5) Clear distance between pipes shall be adjusted to provide for the minimum distance between safety end treatments.

(6) Cement stabilized bedding and backfill shall be in accordance with the Item, "Excavation and Backfill for Structures". Bedding and backfill shall be considered subsidiary to the Item "Safety End Treatment". When concrete riprap is specified around the safety end treatment, backfill shall be as directed by Engineer.

GENERAL NOTES:

Precast safety end treatment for reinforced concrete pipe may be used for TYPE II end treatment as specified in Item "Safety End Treatment".

When Precast Safety End Treatment is used as a Contractor's alternate to mitered RCP, Riprap will not be required unless noted otherwise on the plans.

Synthetic fibers listed on the "Fibers for Concrete" Material Producer List (MPL) may be used in lieu of steel reinforcing in riprap concrete unless noted otherwise.

Manufacture of this product shall conform to requirements of Item "Safety End Treatment" except as noted below :

A. Minimum reinforcing shall be #4 at 6" (Grade 40) or #4 at 9" (Grade 60) each way or 6 x 6 - W12 x W12 or 5 x 5 - W10 x W10 welded wire reinforcement (WWR).

B. Concrete for precast (steel formed) sections shall be Class "C" with a minimum compressive strength of 3600 psi.

At the option and expense of the Contractor the next larger size of Safety End Treatment may be furnished; as long as the "D" dimension cast is that of the required size of pipe.

Pipe Runners are designed for a traversing load of 10,000 Lbs at yield as recommended by Research Report 280-2F, "Safety Treatment of Roadside Parallel-Drainage Structures", Texas Transportation Institute, March 1981.

Pipe Runners shall conform to the requirements of ASTM A53 (Type E or S, Grade B), ASTM A500 (Grade B), or API 5LX52.

All steel components except reinforcing, shall be galvanized after fabrication. Galvanizing damaged during transport or construction shall be repaired in accordance with the specifications.

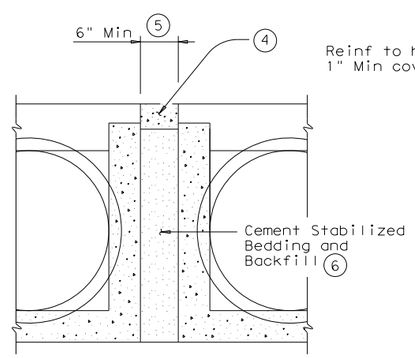

MULTIPLE PIPE INSTALLATION

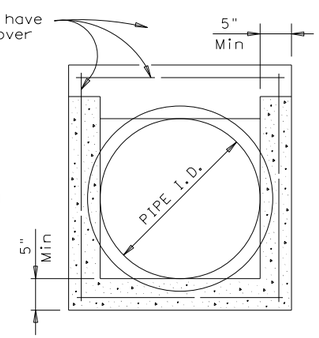

OPTION WITH SQUARE BOTTOM

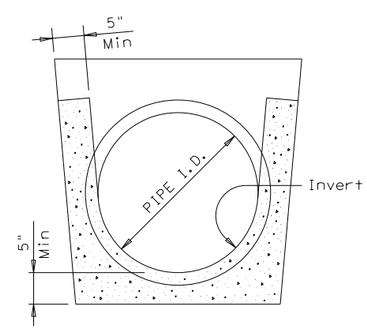

OPTION WITH INVERT BOTTOM

SECTION A-A

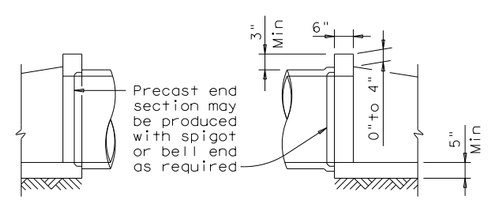

OPTIONAL JOINT

(Showing joint between RCP and Precast Safety End Treatment)

Texas Department of Transportation

Bridge Division Standard

PRECAST SAFETY END TREATMENT

TYPE II ~ PARALLEL DRAINAGE

PSET-SP

FILE: psetspss.dgn	DN: RLW	CK: KLR	DW: JTR	CK: GAF
©TxDOT February 2010	CONT	SECT	JOB	HIGHWAY
REVISIONS				
11-10: Add note for synthetic fibers.	DIST	COUNTY		SHEET NO.
				238

DATE:
FILE:

TABLE OF DIMENSIONS & REINFORCING STEEL
(Wings for One Structure End)

Dimensions					Variable Reinforcing				Estimated ④ Quantities per ft of wing (2~Wings)		Estimated Quantities per ft of Toewall (1~Toewall)	
					Bars J1		Bars J2					
Maximum Wingwall Height Hw	W	X	Y	Z	Size	Spa	Size	Spa	Reinf (Lb/Ft)	Conc (CY/Ft)	Reinf (Lb/Ft)	Conc (CY/Ft)
2'-6"	2'-10"	10"	1'- 0"	7"	#4	1'-0"	#4	1'-0"	48.64	0.406	6.85	0.071
2'-9"	2'-10"	10"	1'- 0"	7"	#4	1'-0"	#4	1'-0"	49.31	0.424	6.85	0.071
3'-0"	2'-10"	10"	1'- 0"	7"	#4	1'-0"	#4	1'-0"	49.98	0.444	6.85	0.071
3'-3"	2'-10"	10"	1'- 0"	7"	#4	1'-0"	#4	1'-0"	53.32	0.462	6.85	0.071
3'-6"	2'-10"	10"	1'- 0"	7"	#4	1'-0"	#4	1'-0"	53.98	0.480	6.85	0.071
4'-0"	3'- 2"	1'- 2"	1'- 0"	7"	#4	1'-0"	#4	1'-0"	55.77	0.532	6.85	0.071
4'-6"	3'- 2"	1'- 2"	1'- 0"	7"	#4	1'-0"	#4	1'-0"	59.77	0.568	6.85	0.071
5'-0"	3'- 9"	1'- 7"	1'- 2"	7"	#4	1'-0"	#4	1'-0"	63.45	0.632	6.96	0.075
5'-6"	3'- 9"	1'- 7"	1'- 2"	7"	#4	1'-0"	#4	1'-0"	67.46	0.668	6.96	0.075
6'-0"	4'- 4"	2'- 0"	1'- 4"	7"	#5	1'-0"	#5	1'-0"	80.67	0.730	7.07	0.078
6'-6"	4'- 4"	2'- 0"	1'- 4"	7"	#5	1'-0"	#5	1'-0"	85.05	0.768	7.07	0.078
7'-0"	5'- 0"	2'- 3"	1'- 9"	8"	#5	1'-0"	#5	1'-0"	92.15	0.864	8.07	0.093
7'-6"	5'- 0"	2'- 3"	1'- 9"	8"	#5	1'-0"	#5	1'-0"	96.54	0.902	8.07	0.093
8'-0"	5'- 6"	2'- 8"	1'-10"	8"	#5	6"	#5	6"	139.04	0.962	8.13	0.095
8'-6"	5'- 6"	2'- 8"	1'-10"	8"	#5	6"	#5	6"	144.47	1.000	8.13	0.095
9'-6"	6'- 0"	2'-10"	2'- 2"	9"	#5	6"	#5	6"	156.93	1.136	8.41	0.110
10'-6"	6'- 5"	3'- 0"	2'- 5"	9"	#6	6"	#5	6"	196.27	1.234	8.57	0.117
11'-6"	7'- 2"	3'- 6"	2'- 8"	11"	#6	6"	#6	6"	230.13	1.438	9.52	0.140
12'-6"	7'- 8"	3'- 9"	2'-11"	1'- 0"	#7	6"	#6	6"	283.41	1.592	9.74	0.157
13'-6"	8'- 2"	4'- 0"	3'- 2"	1'- 2"	#8	6"	#6	6"	348.72	1.804	10.02	0.186
14'-6"	8'-10"	4'- 5"	3'- 5"	1'- 4"	#9	6"	#6	6"	432.94	2.046	10.30	0.218
15'-6"	9'- 6"	4'-10"	3'- 8"	1'- 6"	#9	6"	#7	6"	489.52	2.302	11.24	0.253
16'-0"	9'-11"	5'- 0"	3'-11"	1'- 7"	#9	6"	#7	6"	505.72	2.448	11.47	0.279

TABLE OF WINGWALL REINFORCING (2~Wings)

Bar	Size	No.	Spa
D1	#6	~	1'-0"
D2	#6	~	1'-0"
E1	#4	~	1'-0"
F	#4	~	1'-0"
G	#6	~	8"
M1	#4	4	~
P	#4	~	1'-0"
V	#4	~	1'-0"

TABLE OF TOEWALL REINFORCING

Bar	Size	No	Spa
J3	#4	~	1'-0"
M2	#4	2	~
E2	#4	~	1'-0"

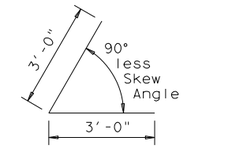

BARS D1

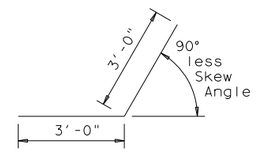

BARS D2

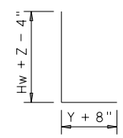

BARS J1

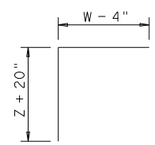

BARS J2

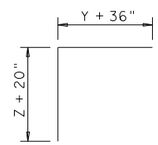

BARS J3

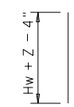

BARS V

WING DIMENSION CALCULATIONS:

Formulas: (All values are in Feet)

Hw = H + T + C
Lw = (Hw) (SL) ÷ Cosine θ for Ty PW-1
= (Hw - 1') (SL) ÷ Cosine θ for Ty PW-2 and Hw ≥ 4'
= (Hw - 0.5') (SL) ÷ Cosine θ for Ty PW-2 and Hw < 4'

For Cast-in-place culverts:
Ltw = [(N) (S) + (N + 1) (U)] ÷ Cosine θ

For Precast culverts:
Ltw = [(N) (2 U + S) + (N - 1) (0.5')] ÷ Cosine θ
Total Wingwall Area (Two Wings ~ SF)
= (2)(Hw)(Lw) for Ty PW-1
= (2)(Hw)(Lw) - 6 SF for Ty PW-2 and Hw ≥ 4'
= (2)(Hw)(Lw) - 1.5 SF for Ty PW-2 and Hw < 4'

Hw = Height of Wingwall
Lw = Length of Wingwall
Ltw = Culvert Toewall Length
N = Number of Culvert Spans
SL:1 = Channel Slope ratio. (Horizontal: 1 Vertical, Usual value is 2:1)
θ = Culvert Skew

See applicable box culvert standard for S, H, T and U values.

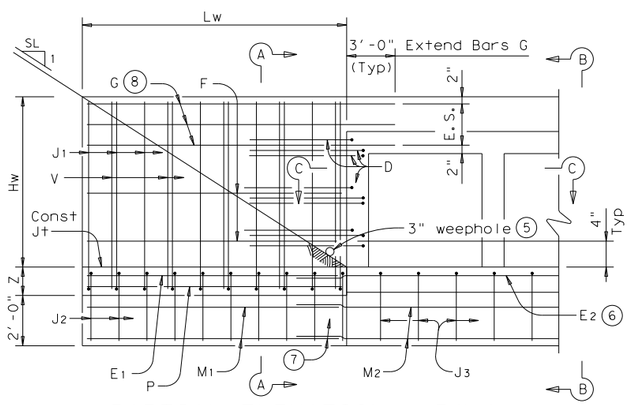

PARTIAL ELEVATION - PW-1

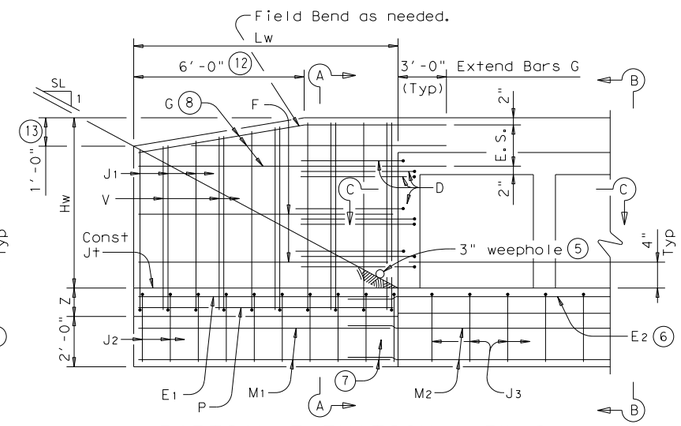

PARTIAL ELEVATION - PW-2

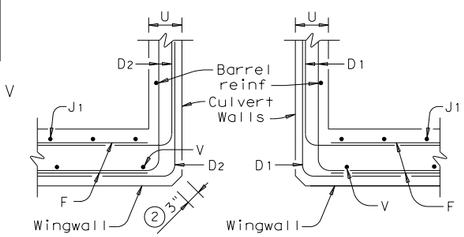

SECTION C-C

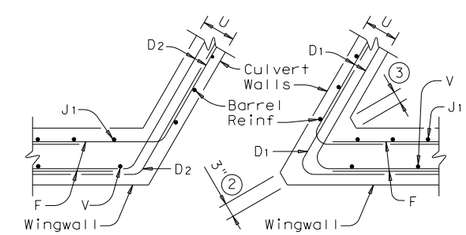

SECTION C-C

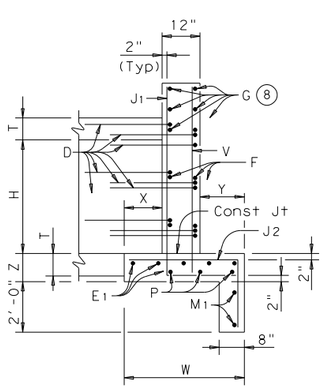

SECTION A-A
(Showing Wing Reinf)

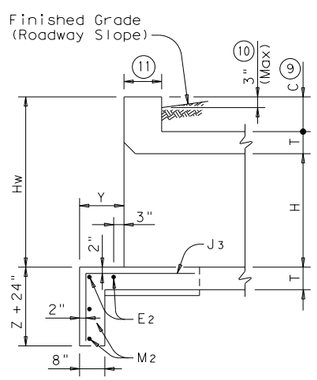

SECTION B-B
(Showing Wing Reinf)

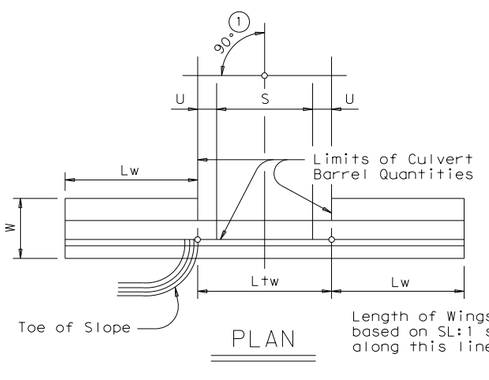

PLAN

DETAILS FOR NON-SKEWED BOX CULVERTS

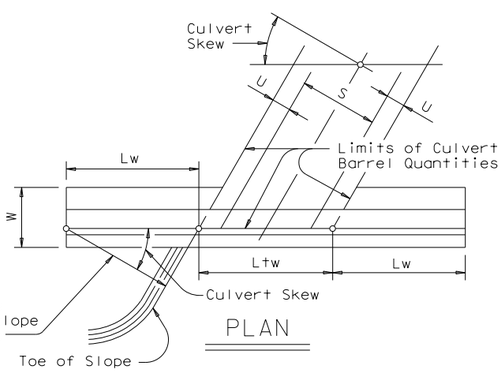

PLAN

DETAILS FOR SKEWED BOX CULVERTS
(Showing 30° Skew)

① Skew Angle = 0°

② At discharge end, chamfer may be ¾".

③ For 15° Skew ~ 1"
For 30° Skew ~ 2"
For 45° Skew ~ 3"

④ Quantities shown are for two Type PW-1 wings. Adjust concrete volume for Type PW-2 wings. To determine estimated quantities for two wings, multiply the tabulated values by Lw. Quantities shown do not include weight of Bars D.

⑤ Provide weepholes for Hw = 5'-0" and greater. Fill around weepholes with coarse gravel.

⑥ Extend Bars E2 1'-6" minimum into the wingwall footing.

⑦ Lap Bars M1 1'-6" minimum with Bars M2.

⑧ Bars G equally spaced at 8" maximum, place as shown. Provide at least two pair Bars G per wing.

⑨ 0" min to 5'-0" max. Estimated curb heights are shown elsewhere in the plans. For structures with pedestrian rail, bicycle rail or curbs taller than 1'-0", refer to ECD standard. For structures with T6 bridge rail, refer to T6-CM standard. For structures with traffic rail, other than T6, refer to RAC standard.

⑩ For vehicle safety, the following requirements must be met:
- For structures without bridge rail, curbs cannot project more than 3" above finished grade.
- For structures with bridge rail, build curbs flush with finished grade.

Reduce curb heights, if necessary, to meet the above requirements. No changes will be made in quantities and no additional compensation will be allowed for this work.

⑪ 1'-0" typical. 2'-0" typical when RAC standard is referenced elsewhere in the plans.

⑫ 3'-0" for Hw < 4'.

⑬ 6" for Hw < 4'.

GENERAL NOTES:

Designed in accordance with AASHTO LRFD Bridge Design Specifications.

Provide Class "C" Concrete (f'c = 3,600 psi Min) and Grade 60 reinforcing steel.

Provide 1 ¼" Min clear cover to reinforcing steel.

Depth of toewalls for wingwalls and culverts may be reduced or eliminated when founded on solid rock, when directed by the Engineer.

See BCS sheet for wingwall type and additional dimensions and information.

The quantities for concrete and reinforcing steel resulting from the formulas given on this sheet are for the Contractor's information only.

DESIGNER NOTES:

Type PW-1 can be used for all applications and must be used if railing is to be mounted to the wingwall.

Type PW-2 can only be used for applications without a railing mounted to the wingwall.

DISCLAIMER:
The use of this standard is governed by the "Texas Engineering Practice Act". No warranty of any kind is made by TxDOT for any purpose whatsoever. TxDOT assumes no responsibility for the conversion of this standard to other formats or for incorrect results or damages resulting from its use.

DATE:
FILE:

Texas Department of Transportation — Bridge Division Standard

CONCRETE WINGWALLS
WITH PARALLEL WINGS FOR BOX CULVERTS
TYPES PW-1 AND PW-2

PW

FILE: pwstde01.dgn	DN: GAF	CK: CAT	DW: TxDOT	CK: GAF
©TxDOT February 2010	CONT	SECT	JOB	HIGHWAY
REVISIONS 11-10: Reinforcing Quantities. 01-12: PW-1 & PW-2.	DIST	COUNTY		SHEET NO. 239

BOX DATA

SECTION DIMENSIONS S (ft)	H (ft)	T_T (in)	T_B (in)	T_S (in)	Fill Height (ft)	M (Min) (in)	REINFORCING (in²/ft) ② A_{S1}	A_{S2}	A_{S3}	A_{S4}	A_{S5}	A_{S6}	A_{S7}	A_{S8}	① Lift Weight (Tons)
3	2	7	6	4	<2	-	0.17	0.25	0.16	0.10	0.17	0.17	0.17	0.14	3.3
3	2	4	4	4	2<3	31	0.13	0.19	0.18	0.10	-	-	-	-	2.4
3	2	4	4	4	3-5	31	0.10	0.11	0.12	0.10	-	-	-	-	2.4
3	2	4	4	4	10	31	0.10	0.10	0.10	0.10	-	-	-	-	2.4
3	2	4	4	4	15	31	0.10	0.13	0.13	0.10	-	-	-	-	2.4
3	2	4	4	4	20	31	0.11	0.17	0.17	0.10	-	-	-	-	2.4
3	2	4	4	4	25	31	0.14	0.21	0.21	0.10	-	-	-	-	2.4
3	2	4	4	4	30	31	0.17	0.25	0.25	0.10	-	-	-	-	2.4
3	2	4	4	4	35	31	0.20	0.29	0.30	0.10	-	-	-	-	2.4
3	3	7	6	4	<2	-	0.17	0.27	0.17	0.10	0.17	0.17	0.17	0.14	3.7
3	3	4	4	4	2<3	31	0.10	0.22	0.21	0.10	-	-	-	-	2.8
3	3	4	4	4	3-5	31	0.10	0.14	0.14	0.10	-	-	-	-	2.8
3	3	4	4	4	10	31	0.10	0.11	0.11	0.10	-	-	-	-	2.8
3	3	4	4	4	15	31	0.10	0.14	0.15	0.10	-	-	-	-	2.8
3	3	4	4	4	20	31	0.10	0.18	0.19	0.10	-	-	-	-	2.8
3	3	4	4	4	25	31	0.10	0.23	0.23	0.10	-	-	-	-	2.8
3	3	4	4	4	30	31	0.12	0.27	0.28	0.10	-	-	-	-	2.8
3	3	4	4	4	35	31	0.14	0.32	0.32	0.10	-	-	-	-	2.8

① For Box Length = 8'-0"

② A_{S1} thru A_{S4}, A_{S7} and A_{S8} are minimum required areas of reinforcement per linear foot of box length. A_{S6} and A_{S5} are minimum required areas of reinforcement per linear foot of box width.

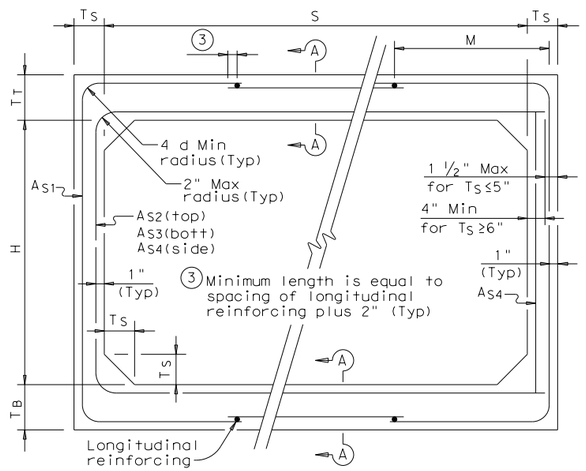

CORNER OPTION "A" CORNER OPTION "B"

FILL HEIGHT 2 FT AND GREATER

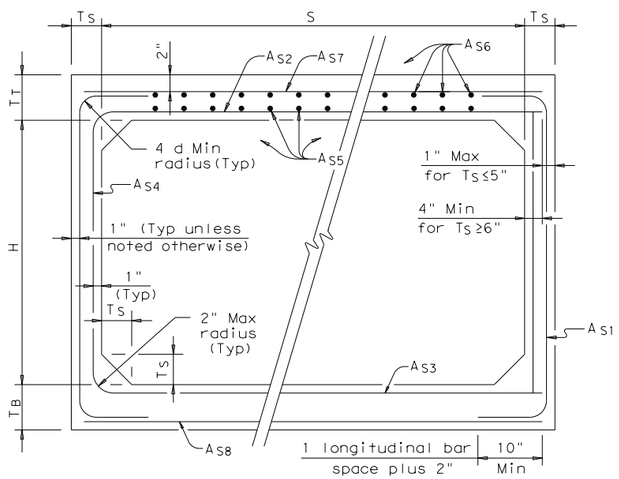

CORNER OPTION "A" CORNER OPTION "B"

FILL HEIGHT LESS THAN 2 FT

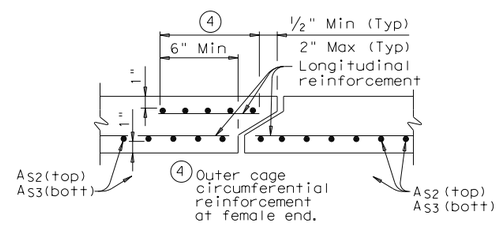

SECTION A-A

(TOP AND BOTTOM SLAB JOINT REINFORCEMENT)

GENERAL NOTES:

Designs shown conform to ASTM C1577.

Refer to ASTM C1577 for information or details not shown.

All concrete shall be Class "H" Concrete with a minimum compressive strength of 5,000 psi.

See SCP-MD standard sheet for miscellaneous details and notes not shown.

In lieu of furnishing the designs shown on this sheet, the contractor may furnish an alternate design that is equal to or exceeds the box design for the design fill height in the table. Shop plans for alternate designs shall be submitted in accordance with Item "Precast Concrete Structural Members (Fabrication)".

HL93 LOADING

Texas Department of Transportation — Bridge Division Standard

SINGLE BOX CULVERTS PRECAST

3'-0" SPAN

SCP-3

FILE: scp03sts.dgn	DN: GAF	CK: LMW	DW: BWH/TxDOT	CK: GAF
©TxDOT February 2010	CONT	SECT	JOB	HIGHWAY
REVISIONS	DIST	COUNTY		SHEET NO.
				240

DISCLAIMER:
The use of this standard is governed by the "Texas Engineering Practice Act". No warranty of any kind is made by TxDOT for any purpose whatsoever. TxDOT assumes no responsibility for the conversion of this standard to other formats or for incorrect results or damages resulting from its use.

DATE:
FILE:

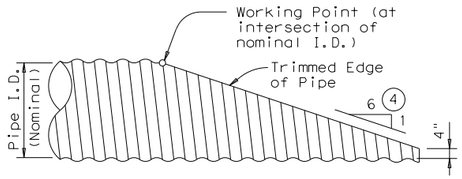

NOTE: All Cross Pipes, calculations, and dimensions are based on the pipe culverts mitered as shown in this detail. Alternate styles of mitered ends will require that appropriate adjustments be made to the values presented on this standard.

SIDE ELEVATION OF TYPICAL PIPE CULVERT MITER

(Showing Corrugated Metal Pipe Culvert.)
(Details at Concrete Pipe Culvert are similar.)

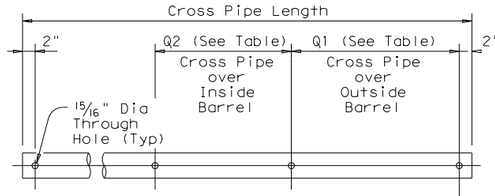

PIPE W/ BOLTED ANCHOR

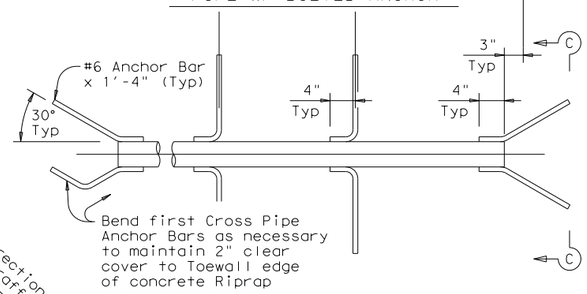

PIPE W/ ANCHOR BARS

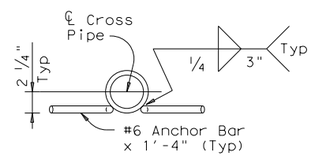

SECTION C-C

CROSS PIPE DETAILS

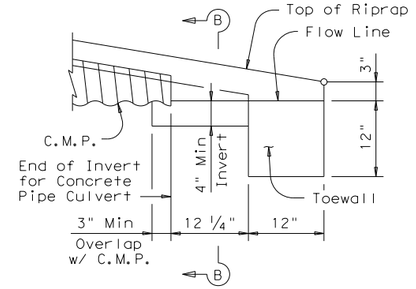

DETAIL "A"

(Showing Invert with Corrugated Metal Pipe Culvert. Concrete Pipe Culvert details are similar. Cross Pipes not shown for clarity.)

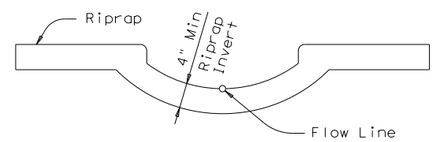

SECTION B-B

(Cross Pipes not shown for clarity.)

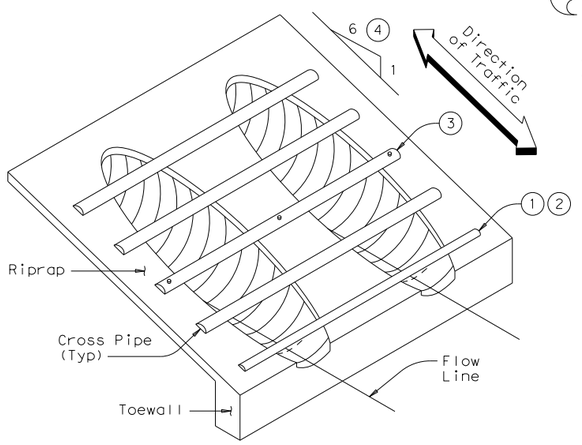

ISOMETRIC VIEW OF TYPICAL INSTALLATION

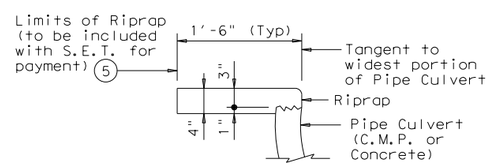

SHOWING TYPICAL PIPE CULVERT & RIPRAP

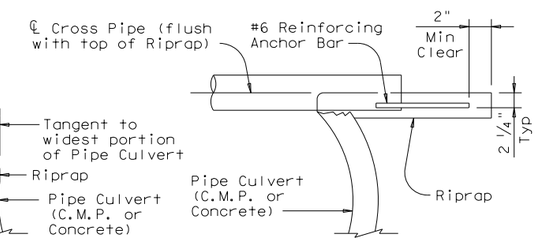

SHOWING CROSS PIPE WITH ANCHOR BAR

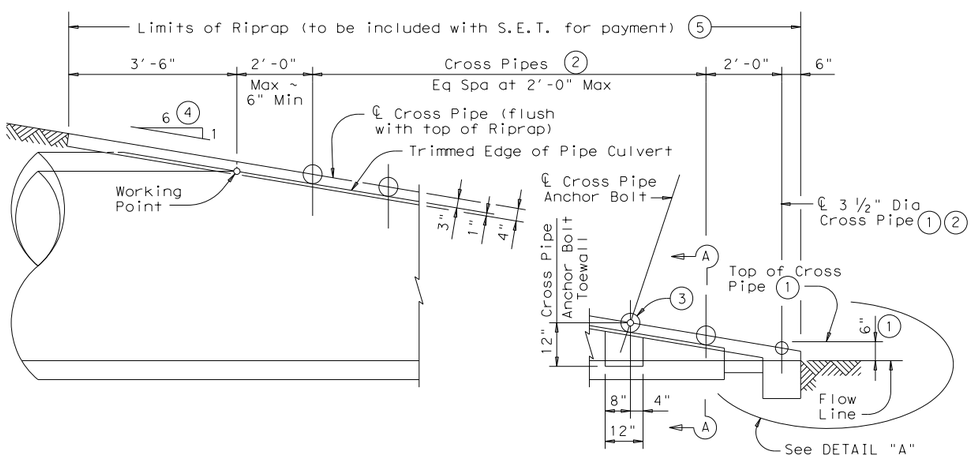

SIDE ELEVATION OF CAST-IN-PLACE CONCRETE

(Showing Concrete Pipe Culvert.)
(Details at Corrugated Metal Pipe Culvert are similar.)

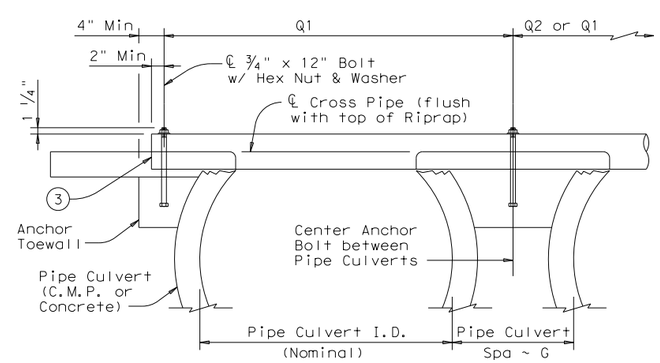

SHOWING CROSS PIPE WITH BOLTED ANCHOR

SECTION A-A

CROSS PIPE LENGTHS, REQUIRED PIPE SIZES, & RIPRAP QUANTITIES (2)

Nominal Culvert I.D.	Conc Riprap (CY) (6)	Pipe Culvert Spa ~ G	Single Barrel ~ Q1	Multi-Barrel ~ Q1	Q2	Conditions for use of Cross Pipes	Cross Pipe Size
12"	0.6	9"	N/A	2'- 1"	1'- 9"	3 or more Pipe Culverts	3" Std (3.500" O.D.)
15"	0.7	11"	N/A	2'- 5"	2'- 2"		
18"	0.8	1'- 2"	N/A	2'-10"	2'- 8"		
21"	0.9	1'- 4"	N/A	3'- 2"	3'- 1"		
24"	0.9	1'- 7"	N/A	3'- 6"	3'- 7"		
27"	1.0	1'- 8"	N/A	3'-10"	3'-11"	3 or more Pipe Culverts	3 1/2" Std (4.000" O.D.)
30"	1.1	1'-10"	N/A	4'- 2"	4'- 4"	2 or more Pipe Culverts	
33"	1.2	1'-11"	4'- 2"	4'- 5"	4'- 8"	All Pipe Culverts	
36"	1.3	2'- 1"	4'- 5"	4'- 9"	5'- 1"	All Pipe Culverts	4" Std (4.500" O.D.)
42"	1.5	2'- 4"	4'-11"	5'- 5"	5'-10"		
48"	1.7	2'- 7"	5'- 5"	6'- 0"	6'- 7"	All Pipe Culverts	5" Std (5.563" O.D.)
54"	2.0	3'- 0"	5'-11"	6'- 9"	7'- 6"		
60"	2.2	3'- 3"	6'- 5"	7'- 4"	8'- 3"		
66"	2.4	3'- 3"	6'-11"	7'-10"	8'- 9"		
72"	2.7	3'- 4"	7'- 5"	8'- 5"	9'- 4"		

1. The proper installation of the first Cross Pipe is critical for vehicle safety. The top of the first Cross Pipe must be placed at no more than 6" above the flow line.
2. Size of Cross Pipes, except the first bottom pipe, shall be as shown in the PIPE SIZE table. The first bottom pipe shall be 3 1/2" Standard Pipe (4" O.D.).
3. The third Cross Pipe from the bottom of the Culvert shall always be installed using a bolted connection. Care shall be taken to ensure that Riprap concrete does not flow into the Cross Pipe so as to permit disassembly of the bolted connection to allow cleanout access. At the Contractor's option, all other Cross Pipes may also be installed using the bolted connection details.
4. Match Cross Slope as shown elsewhere in the plans. Cross Slope of 6:1 or flatter is required for vehicle safety.
5. Riprap placed beyond the limits shown will be paid as Concrete Riprap in accordance with Item 432, "Riprap".
6. Quantities shown are for one end of one reinforced Concrete Pipe Culvert. For multiple pipe culverts or for Corrugated Metal Pipe Culverts, quantities will need to be adjusted. Riprap quantities are for Contractor's information only.

GENERAL NOTES:

Cross Pipes are designed for a traversing load of 10,000 pounds at yield as recommended by Research Report 280-2F, "Safety Treatment of Roadside Parallel-Drainage Structures", Texas Transportation Institute, March 1981.

Safety End Treatments shown herein are intended for use in those installations where out of control vehicles are likely to traverse the openings approximately perpendicular to the Cross Pipes.

Riprap and all necessary inverts shall be Concrete Riprap conforming to the requirements of Item 432, "Riprap".

Synthetic fibers listed on the "Fibers for Concrete" Material Producer List (MPL) may be used in lieu of steel reinforcing in riprap concrete unless noted otherwise.

Payment for riprap and toewall is included in the Price Bid for each Safety End Treatment.

Cross Pipes shall conform to the requirements of ASTM A53 (Type E or S, Grade B), ASTM A500 (Grade B), or API 5LX52.

Bolts and nuts shall conform to ASTM A307.

All steel components, except concrete reinforcing, shall be galvanized after fabrication. Galvanizing damaged during transport or construction shall be repaired in accordance with the specifications.

Texas Department of Transportation — Bridge Division Standard

SAFETY END TREATMENT

FOR 12" DIA TO 72" DIA
PIPE CULVERTS
TYPE II ~ PARALLEL DRAINAGE

SETP-PD

FILE: setppdse.dgn	DN: GAF	CK: CAT	DW: JRP	CK: GAF
©TxDOT February 2010	CONT	SECT	JOB	HIGHWAY
REVISIONS				
11-10: Add note for synthetic fibers.	DIST	COUNTY		SHEET NO.
				241

DISCLAIMER:
The use of this standard is governed by the "Texas Engineering Practice Act". No warranty of any kind is made by TxDOT for any purpose whatsoever. TxDOT assumes no responsibility for the conversion of this standard to other formats or for incorrect results or damages resulting from its use.

DATE:
FILE:

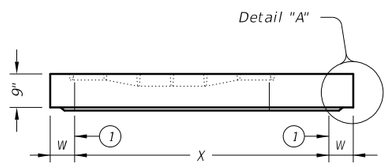

STYLE 'FG'

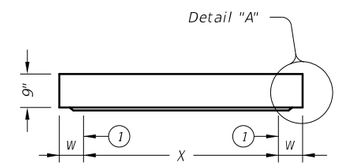

ELEVATION VIEW

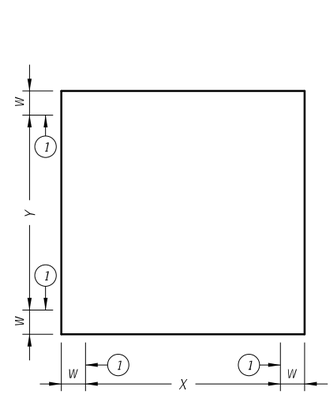

PLAN VIEW

NO OPENINGS

STYLE 'SL'

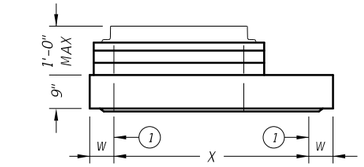

ELEVATION VIEW

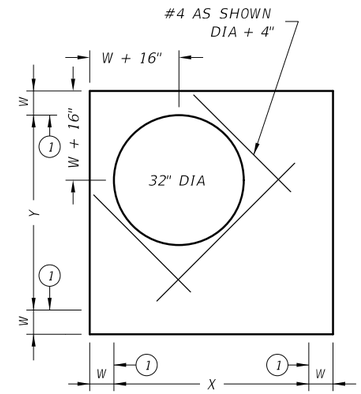

PLAN VIEW

SHIP LOOSE RING & COVER

STYLE 'RH'

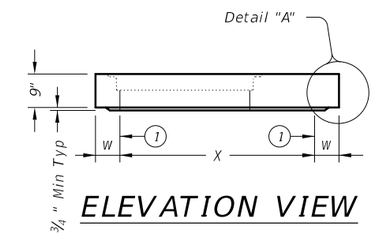

ELEVATION VIEW

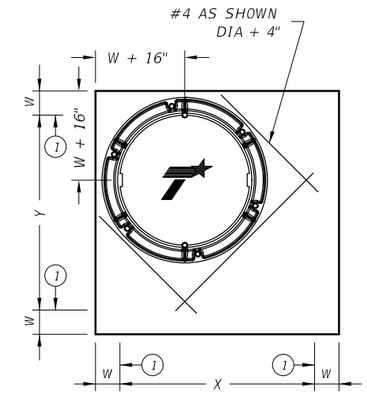

PLAN VIEW

32" DIA CAST-IN RING & COVER

STYLE 'RC'

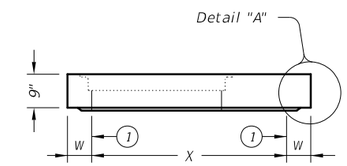

ELEVATION VIEW

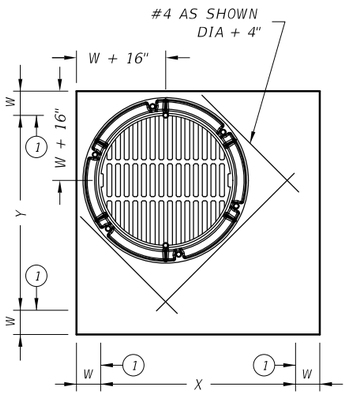

PLAN VIEW

32" DIA CAST-IN RING & GRATE

STYLE 'RG'

ORIENT TAPER TO CORRESPOND WITH ROADWAY CROSS-SLOPE.

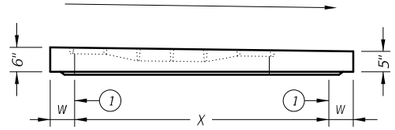

STYLE 'SFG'

ELEVATION VIEW

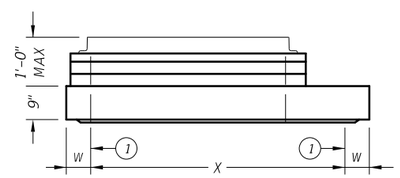

ELEVATION VIEW

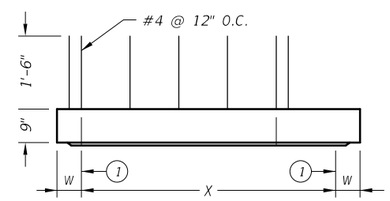

ELEVATION VIEW

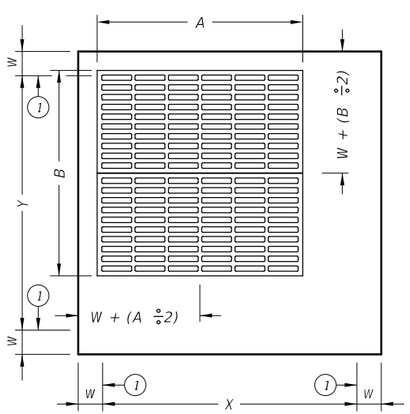

PLAN VIEW

CAST-IN FRAME & GRATE

STYLES 'FG' & 'SFG'

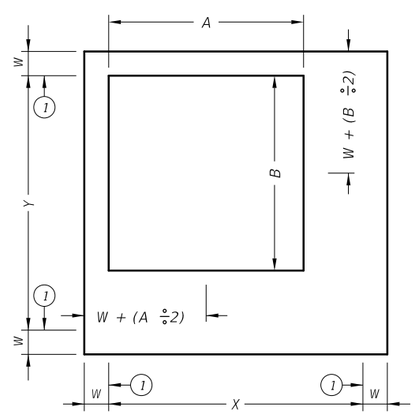

PLAN VIEW

SHIP LOOSE FRAME & GRATE

STYLE 'SH'

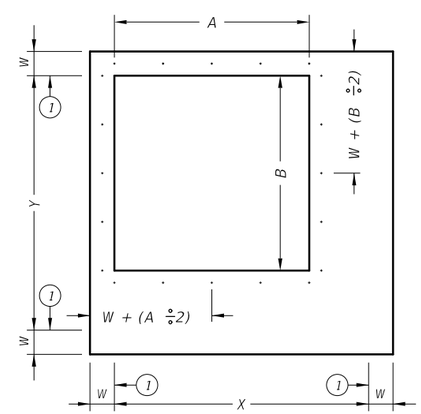

PLAN VIEW

EXPOSED REBAR

STYLE 'S1'

(1) Matches inside face of wall of precast base or riser below inlet.

HL93 LOADING

SHEET 1 OF 2

Texas Department of Transportation

Bridge Division Standard

PRECAST SLAB LID

PSL

FILE: prestd05.dgn	DN: TxDOT	CK: TxDOT	DW: TxDOT	CK: TxDOT
©TxDOT January 2015	CONT	SECT	JOB	HIGHWAY
REVISIONS				
	DIST		COUNTY	SHEET NO.
				242

DISCLAIMER:
The use of this standard is governed by the "Texas Engineering Practice Act". No warranty of any kind is made by TxDOT for any purpose whatsoever. TxDOT assumes no responsibility for the conversion of this standard to other formats or for incorrect results or damages resulting from its use.

DATE:
FILE:

Style	Size (X x Y)	W (2)	A x B (nominal)	Short Span Reinf Steel Area	Long Span Reinf Steel Area
SL	3'x3'	6"	n/a	0.37 in^2/ft	0.37 in^2/ft
RH,RC,RG,SH,S1,FG	3'x3'	6"	3'x3' or 32" Dia	0.37 in^2/ft	0.37 in^2/ft
SFG	3'x3'	6"	3'x3'	0.32 in^2/ft	0.32 in^2/ft
SL	4'x4'	6"	n/a	0.34 in^2/ft	0.34 in^2/ft
RH,RC,RG,SH,S1,FG	4'x4'	6"	3'x3' or 32" Dia	0.41 in^2/ft	0.41 in^2/ft
SH,S1,FG	4'x4'	6"	4'x4'	0.41 in^2/ft	0.41 in^2/ft
SFG	4'x4'	6"	4'x4'	0.32 in^2/ft	0.32 in^2/ft
SL	3'x5'	6"	n/a	0.39 in^2/ft	0.39 in^2/ft
RH,RC,RG,SH,S1,FG	3'x5'	6"	3'x3' or 32" Dia	0.48 in^2/ft	0.48 in^2/ft
SH,S1,FG	3'x5'	6"	3'x5'	0.48 in^2/ft	0.48 in^2/ft
SFG	3'x5'	6"	3'x5'	0.32 in^2/ft	0.32 in^2/ft
SL	4'x5'	6"	n/a	0.42 in^2/ft	0.42 in^2/ft
RH,RC,RG,SH,S1,FG	4'x5'	6"	3'x3' or 32" Dia	0.42 in^2/ft	0.42 in^2/ft
SH,S1,FG	4'x5'	6"	4'x4'	0.63 in^2/ft	0.63 in^2/ft
SH,S1,FG	4'x5'	6"	3'x5'	0.66 in^2/ft	0.66 in^2/ft
SL	5'x5'	6"	n/a	0.36 in^2/ft	0.36 in^2/ft
RH,RC,RG,SH,S1,FG	5'x5'	6"	3'x3' or 32" Dia	0.43 in^2/ft	0.43 in^2/ft
SH,S1,FG	5'x5'	6"	4'x4'	0.63 in^2/ft	0.63 in^2/ft
SH,S1,FG	5'x5'	6"	3'x5'	0.63 in^2/ft	0.63 in^2/ft
SL	5'x6'	6"/8"	n/a	0.48 in^2/ft	0.48 in^2/ft
RH,RC,RG,SH,S1,FG	5'x6'	6"/8"	3'x3' or 32" Dia	0.48 in^2/ft	0.48 in^2/ft
SH,S1,FG	5'x6'	6"/8"	4'x4'	0.60 in^2/ft	0.60 in^2/ft
SH,S1,FG	5'x6'	6"/8"	3'x5'	0.60 in^2/ft	0.60 in^2/ft
SL	6'x6'	6"/8"	n/a	0.43 in^2/ft	0.43 in^2/ft
RH,RC,RG,SH,S1,FG	6'x6'	6"/8"	3'x3' or 32" Dia	0.56 in^2/ft	0.56 in^2/ft
SH,S1,FG	6'x6'	6"/8"	4'x4'	0.56 in^2/ft	0.56 in^2/ft
SH,S1,FG	6'x6'	6"/8"	3'x5'	0.59 in^2/ft	0.59 in^2/ft
SL	8'x8'	8"/10"	n/a	0.45 in^2/ft	0.45 in^2/ft
RH,RC,RG,SH,S1,FG	8'x8'	8"/10"	3'x3' or 32" Dia	0.45 in^2/ft	0.45 in^2/ft
SH,S1,FG	8'x8'	8"/10"	4'x4'	0.45 in^2/ft	0.45 in^2/ft
SH,S1,FG	8'x8'	8"/10"	3'x5'	0.45 in^2/ft	0.45 in^2/ft

(2) See sheet PDD for corresponding wall thickness (W) of base unit or riser.

Construct cast-in-place reinforced concrete apron, when shown elsewhere in plans. Use Class "A" concrete. Apron is subsidiary to PSL. Apron is 1'-6" Min width around precast zone drain.

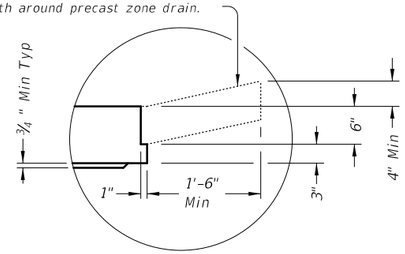

DETAIL "A"

(Reinforcing not shown for clarity)

When an apron is to be cast around PSL, use detail above to create an apron ledge on all 4 sides.

FABRICATION NOTES:

1. Locate penetration (Style 'RH'), ring and cover (Style 'RC'), ring and grate (Style 'RG'), and frame and grate (Style 'FG') in a corner. Only one penetration is allowed per slab lid.
2. Provide Class "H" concrete in accordance with Item 421 and having a minimum compressive strength of 5,000 psi.
3. Provide Grade 60 reinforcing steel or equivalent area of WWR.
4. Provide clear cover of 3/4" to reinforcing from lower outside shoulder of slab for structural reinforcement, and 2" from top of slab for shrinkage and temperature reinforcement. Place short span reinforcing closest to surface.
5. Slabs with a thickness of 8" or greater require shrinkage and temperature reinforcing. Provide steel area = 0.11 in^2/ft each way.
6. No substitution is allowed for diagonal #4 bars around openings.
7. Design tongue and groove joints for full closure on both shoulders. Minimum spigot depth is 3/4".
8. Provide lifting devices in conformance with Manufacturer's recommendations.

INSTALLATION NOTES:

1. Precast slab lids are intended for direct traffic and may be placed in roadway.
2. Seal tongue and groove joints with preformed or bulk mastic in conformance with Manufacturer's recommendations. Tongue and groove joints may be grouted no more than 1" between each section, or 1/2 the joint depth, whichever is greater.
3. Do not grout rubber gasket joints without Manufacturer's recommendation.
4. Initial installation of grade adjustment rings for Styles 'RH' and 'SH' is limited to 1'-0" Max as shown.
5. Grade adjustment rings for Styles 'RH' and 'SH' may be increased to 2'-0" Max when future construction affects final grade of structure. Make adjustments greater than 2'-0" with additional risers. Adjustments can be made up to Max depth shown on sheet PDD. Structure must be evaluated if Max depth will be exceeded.
6. Orient long dimension of grate slots perpendicular to traffic, unless noted otherwise on plans

GENERAL NOTES:

1. Designed according to ASTM C913.
2. Payment for lid is per Item 465, "Junction Boxes, Manholes, and Inlets" by type, style, size, and opening size (when applicable).

Cover dimensions are clear dimensions, unless noted otherwise.

DISCLAIMER:
The use of this standard is governed by the "Texas Engineering Practice Act". No warranty of any kind is made by TxDOT for any purpose whatsoever. TxDOT assumes no responsibility for the conversion of this standard to other formats or for incorrect results or damages resulting from its use.

DATE:
FILE:

Texas Department of Transportation — Bridge Division Standard

PRECAST SLAB LID

PSL

FILE: prestd05.dgn	DN: TxDOT	CK: TxDOT	DW: TxDOT	CK: TxDOT
©TxDOT January 2015	CONT	SECT	JOB	HIGHWAY
REVISIONS				
	DIST	COUNTY		SHEET NO.
				243

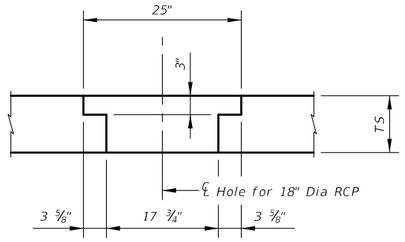

DETAIL "B"

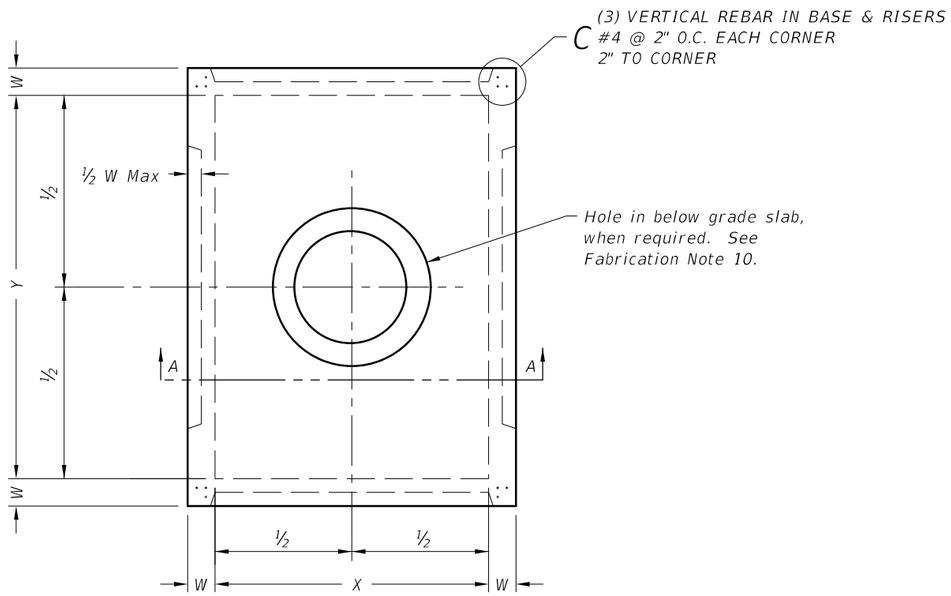

PLAN VIEW

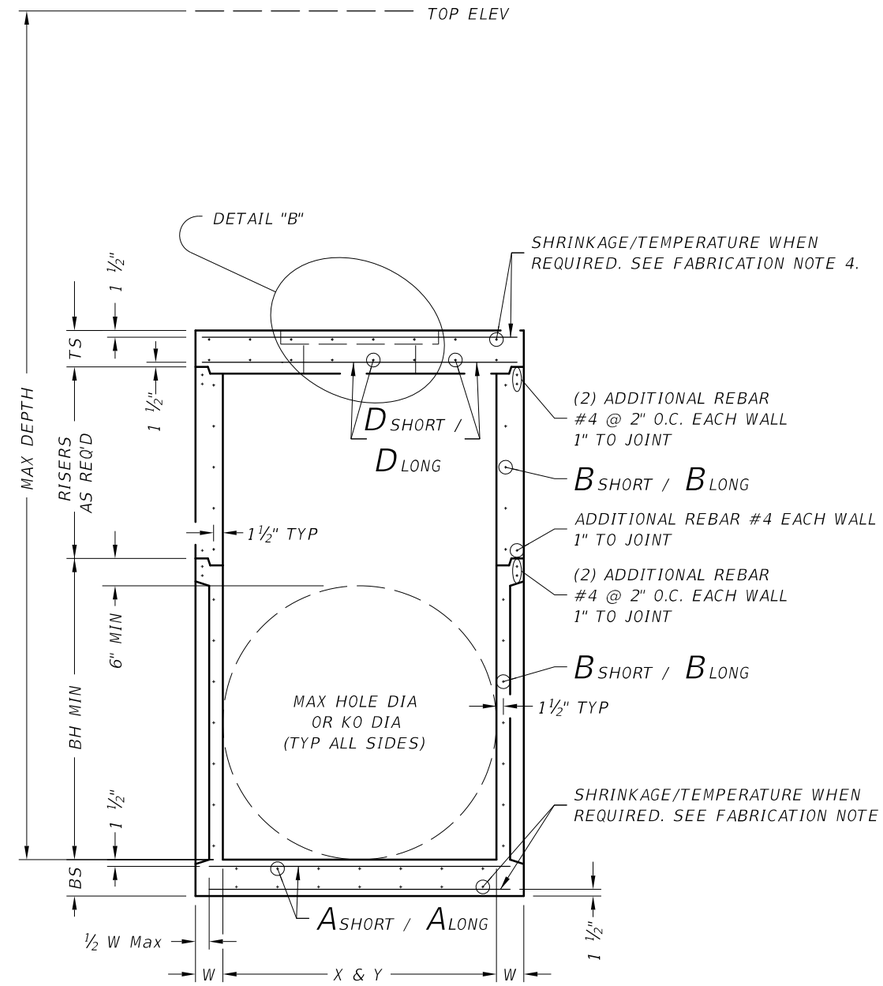

SECTION A-A

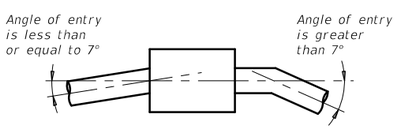

PIPE CONNECTION DETAIL

Connect pipes within 7° of normal to PJB wall.
If necessary, use pipe elbow or curved approach alignment to stay within this limit.

FABRICATION NOTES:

1. Provide Class "H" concrete in accordance with Item 421 and having a minimum compressive strength of 5,000 psi.
2. Provide Grade 60 reinforcing steel or equivalent area of WWR.
3. Provide typical clear cover of 1 ½" to reinforcing steel at interior or exterior walls.
4. Walls or slabs with a thickness of 8" or greater require shrinkage and temperature reinforcing steel. Provide steel area = 0.11 in^2/ft each way.
5. No substitution is allowed for vertical and horizontal #4 bars in corners.
6. Manufacture base and risers to nearest 3" increment.
7. Design tongue and groove joints for full closure on both shoulders. Minimum spigot depth is ¾".
8. Provide lifting devices in conformance with Manufacturer's recommendations.
9. See sheet PDD for sizes, dimensions, and reinforcing steel not shown.
10. Provide hole in below grade slab only when PJB is installed with inlet type POD.

INSTALLATION NOTES:

1. Inverts (benching) to be provided by Contractor. Concrete or mortar used for invert is subsidiary to junction box.
2. Seal tongue and groove joints with preformed or bulk mastic in conformance with Manufacturer's recommendations. Tongue and groove joints may be grouted no more than 1" between each section, or ½ the joint depth, whichever is greater.
3. Do not grout rubber gasket joints without Manufacturer's recommendation.
4. For rigid pipe, cut hole in thin wall panel (KO) 4" Max, 2" Min larger than pipe OD.
5. For flexible pipe, consult boot/seal Manufacturer's specification for placement tolerance and hole size. Center pipe in hole and install boot/seal per Manufacturer's specification.

GENERAL NOTES:

1. Precast Junction Box consists of base slab, base unit, risers (as required), and below grade slab. See sheet PDD for sizes.
2. Designed according to ASTM C913.
3. Payment for junction box is per Item 465 "Junction Boxes, Manholes, and Inlets" by type and size.

Cover dimensions are clear dimensions, unless noted otherwise.

HL93 LOADING

Texas Department of Transportation

Bridge Division Standard

PRECAST JUNCTION BOX

PJB

FILE: prestd09.dgn	DN: TxDOT	CK: TxDOT	DW: TxDOT	CK: TxDOT
©TxDOT January 2015	CONT	SECT	JOB	HIGHWAY
REVISIONS	DIST		COUNTY	SHEET NO.
				244

DISCLAIMER:
The use of this standard is governed by the "Texas Engineering Practice Act". No warranty of any kind is made by TxDOT for any purpose whatsoever. TxDOT assumes no responsibility for the conversion of this standard to other formats or for incorrect results or damages resulting from its use.

DATE:
FILE:

DISCLAIMER:
The use of this standard is governed by the "Texas Engineering Practice Act". No warranty of any kind is made by TxDOT for any purpose whatsoever. TxDOT assumes no responsibility for the conversion of this standard to other formats or for incorrect results or damages resulting from its use.

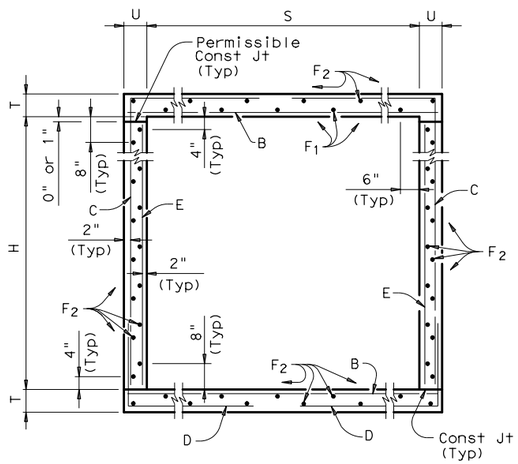

TYPICAL SECTION

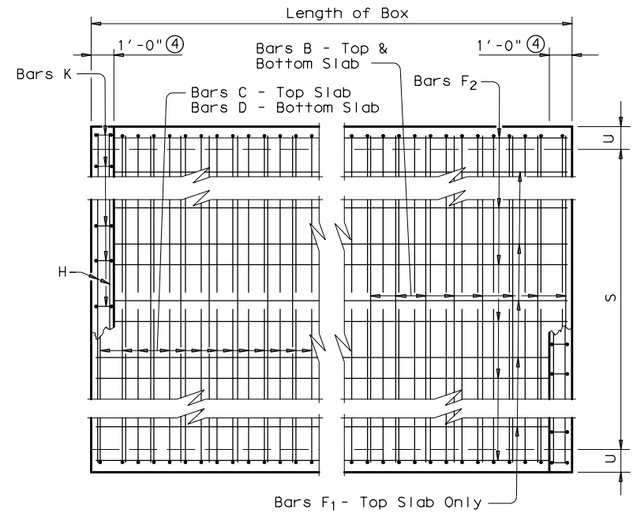

PLAN OF REINF STEEL

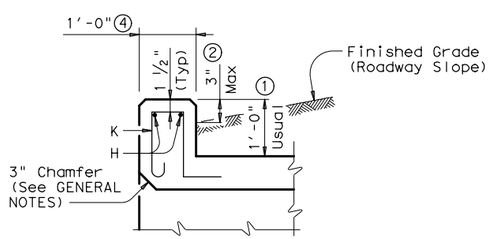

SECTION THRU CURB

① 0" min to 5'-0" max. Estimated curb heights are shown elsewhere in the plans. For structures with pedestrian rail, bicycle rail or curbs taller than 1'-0", refer to ECD standard. For structures with T6 bridge rail, refer to T6-CM standard. For structures with traffic rail, other than T6, refer to RAC standard.

② For vehicle safety, the following requirements must be met:
- For structures without bridge rail, curbs shall project no more than 3" above finished grade.
- For structures with bridge rail, curbs shall be flush with finished grade.
Curb heights shall be reduced, if necessary, to meet the above requirements. No changes will be made in quantities and no additional compensation will be allowed for this work.

③ For curbs less than 1'-0" high, tilt bars K or reduce bar height as necessary to maintain cover. For curbs less than 3" high, bars K may be omitted.

④ 1'-0" typical. 2'-0" when RAC standard is referred to elsewhere in the plans.

Deformed welded wire reinforcement (WWR) meeting the requirements of ASTM A1064 may be used to replace conventional reinforcement shown at the Contractor's option. The area of required reinforcement may be reduced by the ratio of 60 ksi / 70 ksi. Spacing of WWR is limited to 4" Min and 18" Max. When required, provide lap splices in the WWR of the same length required for the equivalent bar size, rounded up for wire sizes between conventional bar sizes.

Example Conversion: Replacement of No. 6 Gr 60 at 6" Spacing with WWR.
WWR required = (0.44 sq in/ 0.5') x (60 ksi/70 ksi) = 0.754 sq in/ft.
If D30.6 wire is used to meet the 0.754 sq in/ft requirement in this example, the required spacing = (0.306 sq in/ 0.754 sq in/ft) x 12 in/ft = 4.87" Max spacing.
Required lap length for the provided D30.6 wire is 2'-2" (Lap required for uncoated No. 5 bars, as shown in Item 440).

GENERAL NOTES:

Designed according to AASHTO LRFD Specifications.
Designed to the maximum fill height shown.
All reinforcing steel shall be Grade 60.
All concrete shall be Class "C" with these exceptions: use Class "S" for top slabs of culverts with overlay, with 1-to-2 course surface treatment, or with the top slab as the final riding surface.
Class "C" concrete shall have a minimum compressive strength of 3,600 psi. Class "S" concrete shall have a minimum compressive strength of 4,000 psi.
The use of permanent forms is not allowed.
The bottom edge of the top slab shall be chamfered 3" at the entrance.
Reinforcing bars shall be adjusted to provide a minimum of 1 1/4" clear cover.
Construction joints shown at the flow line may be raised a maximum of 6" at the Contractor's option. If this option is used, Bars E may be cut off or raised, and Bars C and D may be reversed.
See standard SCC-MD for skewed ends, angle sections and lengthening details.

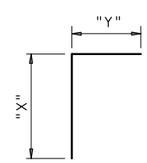

BARS C

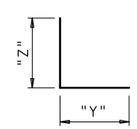

BARS D

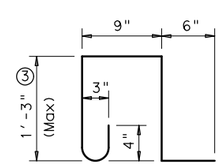

BARS K ~ #4
(Spa = 1'-0" Max)
(Length = 4'-3")

HL93 LOADING

SHEET 1 OF 2

Texas Department of Transportation

Bridge Division Standard

SINGLE BOX CULVERTS CAST-IN-PLACE
0' TO 30' FILL

SCC-3 & 4

FILE: scc34ste.dgn	DN: GAF	CK: LMW	DW: BWH/TxDOT	CK: GAF
©TxDOT February 2010	CONT	SECT	JOB	HIGHWAY
REVISIONS				
10-12: Added WWR	DIST	COUNTY		SHEET NO.
				245

DATE:
FILE:

BILLS OF REINFORCING STEEL (For Box Length = 40 feet)

SECTION DIMENSIONS				FILL HEIGHT	Bars B					Bars C							Bars D							Bars E~#4 at 18" Max			Bars F_1 ~#4				Bars F_2~#4 at 18" Max			Bars H 4~#4		Bars K		QUANTITIES: Per foot of Barrel		QUANTITIES: Curb		QUANTITIES: Total	
S	H	T	U		No.	Size	Spa	Length	Weight	No.	Size	Spa	Length	Weight	"X"	"Y"	No.	Size	Spa	Length	Weight	"Y"	"Z"	No.	Length	Wt	No.	Spa	Length	Wt	No.	Length	Wt	Length	Wt	No.	Wt	Conc (CY)	Reinf (Lb)	Conc (CY)	Reinf (Lb)	Conc (CY)	Reinf (Lb)
3'-0"	2'-0"	7"	7"	30'	138	#4	7"	3'-11"	361	98	#4	10"	4'- 2"	273	2'- 5"	1'- 9"	98	#4	10"	3'-11"	256	1'- 9"	2'- 2"	56	2'-0"	75	3	13"	39'-9"	80	19	39'-9"	505	3'-11"	10	10	28	0.266	38.8	0.3	38	10.9	1,588
3'-0"	3'-0"	7"	7"	30'	162	#4	6"	3'-11"	424	98	#4	10"	5'- 2"	338	3'- 5"	1'- 9"	98	#4	10"	3'-11"	256	1'- 9"	2'- 2"	56	3'-0"	112	3	12"	39'-9"	80	23	39'-9"	611	3'-11"	10	10	28	0.310	45.5	0.3	38	12.7	1,859
4'-0"	2'-0"	7"	7"	30'	194	#4	5"	4'-11"	637	162	#4	6"	4'- 8"	505	2'- 5"	2'- 3"	162	#4	6"	4'- 5"	478	2'- 3"	2'- 2"	56	2'-0"	75	5	10"	39'-9"	133	21	39'-9"	558	4'-11"	13	12	34	0.310	59.7	0.4	47	12.8	2,433
4'-0"	3'-0"	7"	7"	30'	162	#5	6"	4'-11"	831	162	#4	6"	5'- 8"	613	3'- 5"	2'- 3"	162	#4	6"	4'- 5"	478	2'- 3"	2'- 2"	56	3'-0"	112	6	8"	39'-9"	159	25	39'-9"	664	4'-11"	13	12	34	0.353	71.4	0.4	47	14.5	2,904
4'-0"	4'-0"	7"	7"	30'	162	#5	6"	4'-11"	831	162	#4	6"	6'- 8"	721	4'- 5"	2'- 3"	162	#4	6"	4'- 5"	478	2'- 3"	2'- 2"	56	4'-0"	150	6	8"	39'-9"	159	25	39'-9"	664	4'-11"	13	12	34	0.396	75.1	0.4	47	16.2	3,050

Deformed welded wire reinforcement (WWR) meeting the requirements of ASTM A1064 may be used to replace conventional reinforcement shown at the Contractor's option. The area of required reinforcement may be reduced by the ratio of 60 ksi / 70 ksi. Spacing of WWR is limited to 4" Min and 18" Max. When required, provide lap splices in the WWR of the same length required for the equivalent bar size, rounded up for wire sizes between conventional bar sizes.

Example Conversion: Replacement of No. 6 Gr 60 at 6" Spacing with WWR.
WWR required = (0.44 sq in/ 0.5') x (60 ksi/70 ksi) = 0.754 sq in/ft.
If D30.6 wire is used to meet the 0.754 sq in/ft requirement in this example, the required spacing = (0.306 sq in/ 0.754 sq in/ft) x 12 in/ft = 4.87" Max spacing.
Required lap length for the provided D30.6 wire is 2'-2" (Lap required for uncoated No. 5 bars, as shown in Item 440).

DISCLAIMER:
The use of this standard is governed by the "Texas Engineering Practice Act". No warranty of any kind is made by TxDOT for any purpose whatsoever. TxDOT assumes no responsibility for the conversion of this standard to other formats or for incorrect results or damages resulting from its use.

HL93 LOADING

Texas Department of Transportation — Bridge Division Standard

SINGLE BOX CULVERTS CAST-IN-PLACE
0' TO 30' FILL

SCC-3 & 4

FILE: scc34ste.dgn	DN: GAF	CK: LMW	DW: BWH/TxDOT	CK: GAF
©TxDOT February 2010	CONT	SECT	JOB	HIGHWAY
REVISIONS				
10-12: Added WWR	DIST	COUNTY		SHEET NO.
				246

DATE:
FILE:

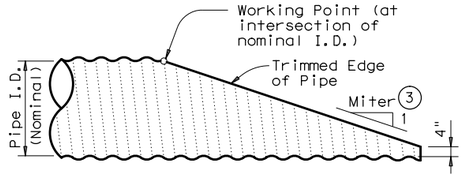

NOTE: All Pipe Runners, calculations, and dimensions are based on the pipe culverts mitered as shown in this detail. Alternate styles of mitered ends will require that appropriate adjustments be made to the values presented on this standard.

SIDE ELEVATION OF TYPICAL PIPE CULVERT MITER

(Showing Corrugated Metal Pipe Culvert. Details of Concrete Pipe Culvert are similar.)

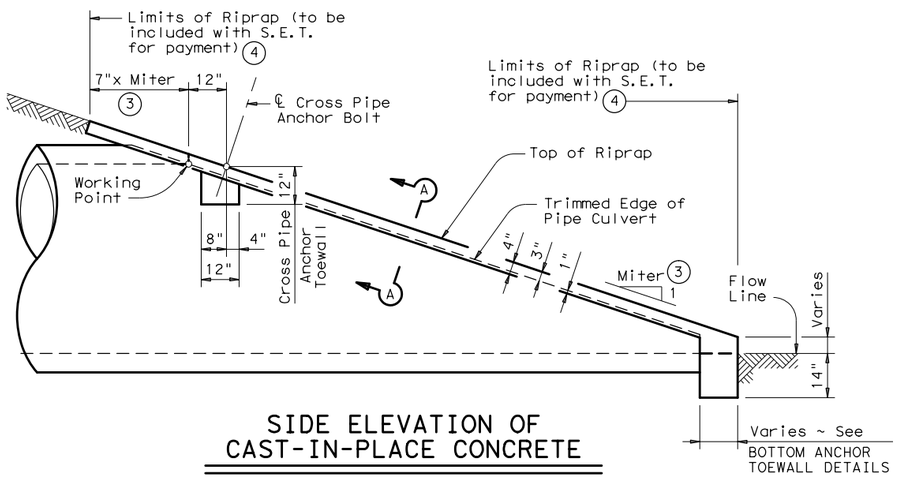

SIDE ELEVATION OF CAST-IN-PLACE CONCRETE

(Showing Concrete Pipe Culvert. Details of Corrugated Metal Pipe Culvert are similar. Pipe Runners not shown for clarity)

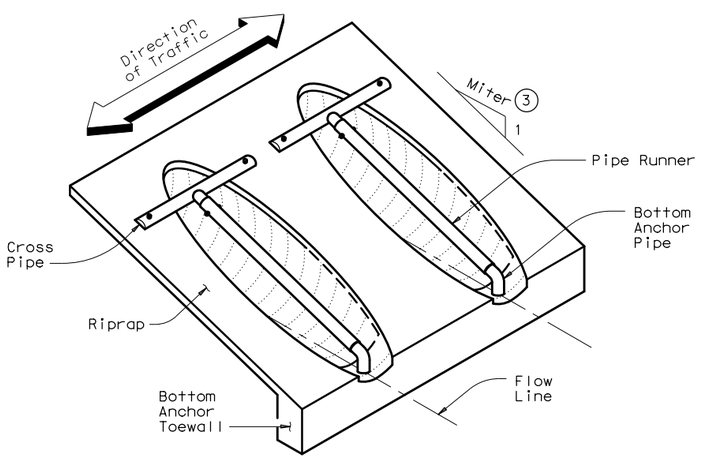

ISOMETRIC VIEW OF TYPICAL INSTALLATION

(Showing installation with no skew.)

CROSS PIPE LENGTHS & PIPE RUNNER LENGTHS (1)(2)

Nominal Culvert I.D.	Pipe Culvert Spa ~ G	Cross Pipe Length	Pipe Runner Length											
			3:1 Side Slope				4:1 Side Slope				6:1 Side Slope			
			0° Skew	15° Skew	30° Skew	45° Skew	0° Skew	15° Skew	30° Skew	45° Skew	0° Skew	15° Skew	30° Skew	45° Skew
24"	1'- 7"	3'- 5"	N/A	N/A	N/A	5'-10"	N/A	N/A	N/A	8'- 1"	N/A	N/A	N/A	12'- 9"
27"	1'- 8"	3'- 8"	N/A	N/A	5'- 5"	6'-11"	N/A	N/A	7'- 7"	9'- 7"	N/A	N/A	11'-11"	14'-11"
30"	1'-10"	3'-11"	N/A	N/A	6'- 4"	8'- 0"	N/A	N/A	8'- 9"	11'- 0"	N/A	N/A	13'- 8"	17'- 0"
33"	1'-11"	4'- 2"	6'- 2"	6'- 5"	7'- 3"	9'- 1"	8'- 6"	8'-10"	10'- 0"	12'- 5"	13'- 3"	13'- 9"	15'- 5"	19'- 2"
36"	2'- 1"	4'- 5"	6'-11"	7'- 3"	8'- 2"	10'- 2"	9'- 6"	9'-11"	11'- 2"	13'-10"	14'- 9"	15'- 3"	17'- 2"	21'- 3"
42"	2'- 4"	4'-11"	8'- 6"	8'-10"	9'-11"	12'- 4"	11'- 7"	12'- 0"	13'- 6"	16'- 8"	17'- 9"	18'- 5"	20'- 8"	25'- 7"
48"	2'- 7"	5'- 5"	10'- 1"	10'- 5"	11'- 9"	N/A	13'- 7"	14'- 2"	15'-10"	N/A	20'- 9"	21'- 6"	24'- 2"	N/A
54"	3'- 0"	5'-11"	11'- 8"	12'- 1"	N/A	N/A	15'- 8"	16'- 3"	N/A	N/A	23'-10"	24'- 8"	N/A	N/A
60"	3'- 3"	6'- 5"	13'- 3"	N/A	N/A	N/A	17'- 9"	N/A	N/A	N/A	26'-10"	N/A	N/A	N/A

TYPICAL PIPE CULVERT MITERS (3)

Side Slope	0° Skew	15° Skew	30° Skew	45° Skew
3:1	3:1	3.106:1	3.464:1	4.243:1
4:1	4:1	4.141:1	4.619:1	5.657:1
6:1	6:1	6.212:1	6.928:1	8.485:1

CONDITIONS WHERE PIPE RUNNERS ARE NOT REQUIRED (2)

Nominal Culvert I.D.	Single Pipe Culvert	Multiple Pipe Culverts
12" thru 21"	Skews thru 45°	Skews thru 45°
24"	Skews thru 45°	Skews thru 30°
27"	Skews thru 30°	Skews thru 15°
30"	Skews thru 15°	Skews thru 15°
33"	Skews thru 15°	Always required
36"	Normal (No Skew)	Always required
42" to 60"	Always required	Always required

STANDARD PIPE SIZES & MAX PIPE RUNNER LENGTHS (1)

Pipe Size	Pipe O.D.	Pipe I.D.	Max Pipe Runner Length
2" STD	2.375"	2.067"	N/A
3" STD	3.500"	3.068"	10'- 0"
4" STD	4.500"	4.026"	19'- 8"
5" STD	5.563"	5.047"	34'- 2"

ESTIMATED CONCRETE RIPRAP QUANTITIES (CY) (5)

Nominal Culvert I.D.	3:1 Side Slope				4:1 Side Slope				6:1 Side Slope			
	0° Skew	15° Skew	30° Skew	45° Skew	0° Skew	15° Skew	30° Skew	45° Skew	0° Skew	15° Skew	30° Skew	45° Skew
12"	0.4	0.4	0.5	0.5	0.5	0.5	0.5	0.6	0.7	0.7	0.7	0.8
15"	0.5	0.5	0.5	0.6	0.6	0.6	0.6	0.7	0.7	0.7	0.8	0.9
18"	0.5	0.5	0.6	0.6	0.6	0.7	0.7	0.8	0.8	0.8	0.9	1.0
21"	0.6	0.6	0.6	0.7	0.7	0.7	0.8	0.9	0.9	0.9	1.0	1.2
24"	0.6	0.7	0.7	0.8	0.8	0.8	0.8	1.0	1.0	1.0	1.1	1.3
27"	0.7	0.7	0.8	0.9	0.8	0.9	0.9	1.1	1.1	1.1	1.2	1.4
30"	0.8	0.8	0.8	0.9	0.9	0.9	1.0	1.2	1.2	1.2	1.3	1.6
33"	0.8	0.8	0.9	1.0	1.0	1.0	1.1	1.3	1.3	1.4	1.5	1.7
36"	0.9	0.9	0.9	1.1	1.1	1.1	1.2	1.4	1.4	1.5	1.6	1.8
42"	1.0	1.0	1.1	1.3	1.2	1.3	1.3	1.6	1.6	1.7	1.8	2.1
48"	1.1	1.1	1.2	N/A	1.4	1.4	1.5	N/A	1.9	1.9	2.1	N/A
54"	1.3	1.3	N/A	N/A	1.6	1.6	N/A	N/A	2.1	2.1	N/A	N/A
60"	1.4	N/A	N/A	N/A	1.7	N/A	N/A	N/A	2.3	N/A	N/A	N/A

(1) Size of Pipe Runner shall be as shown in the tables. Cross Pipe shall be the same size as the Pipe Runner. Cross Pipe Stub Out and Bottom Anchor Pipe shall be the next smaller size pipe as shown in the STANDARD PIPE SIZES table.

(2) This standard allows for the placement of only one pipe runner across each culvert pipe opening. In order to limit the clear opening to be traversed by an errant vehicle, the following conditions must be met:

For 60" culvert pipes, the skew must not exceed 0°.
For 54" culvert pipes, the skew must not exceed 15°.
For 48" culvert pipes, the skew must not exceed 30°.
For all culvert pipe sizes 42" and less, the skew must not exceed 45°.

If the above conditions cannot be met, the designer should consider using a safety end treatment with flared wings. For further information, refer to the TxDOT "Roadway Design Manual".

(3) Miter = Slope of Mitered Pipe Culvert End

(4) Riprap placed beyond the limits shown will be paid as Concrete Riprap in accordance with Item 432, "Riprap".

(5) Quantities shown are for one end of one reinforced Concrete Pipe Culvert. For multiple Pipe Culverts or for Corrugated Metal Pipe Culverts, quantities will need to be adjusted. Riprap quantities are for Contractor's information only.

DISCLAIMER:
The use of this standard is governed by the "Texas Engineering Practice Act". No warranty of any kind is made by TxDOT for any purpose whatsoever. TxDOT assumes no responsibility for the conversion of this standard to other formats or for incorrect results or damages resulting from its use.

DATE:
FILE:

SHEET 1 OF 2

Texas Department of Transportation — Bridge Division Standard

SAFETY END TREATMENT

FOR 12" DIA TO 60" DIA
PIPE CULVERTS
TYPE II ~ CROSS DRAINAGE

SETP-CD

FILE: setpcdse.dgn	DN: GAF	CK: CAT	DW: JRP	CK: GAF
©TxDOT February 2010	CONT	SECT	JOB	HIGHWAY
REVISIONS				
11-10: Add note for synthetic fibers.	DIST	COUNTY		SHEET NO.
				247

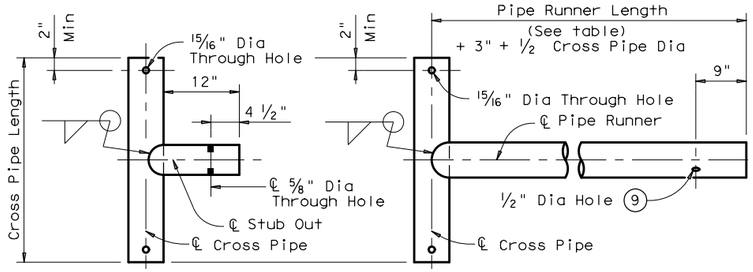

OPTION A1 OPTION A2

CROSS PIPE AND CONNECTIONS DETAILS

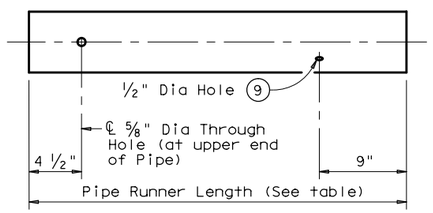

NOTE: The separate Pipe Runner shown is required when Cross Pipe Connection Option A1 is used.

PIPE RUNNER DETAILS

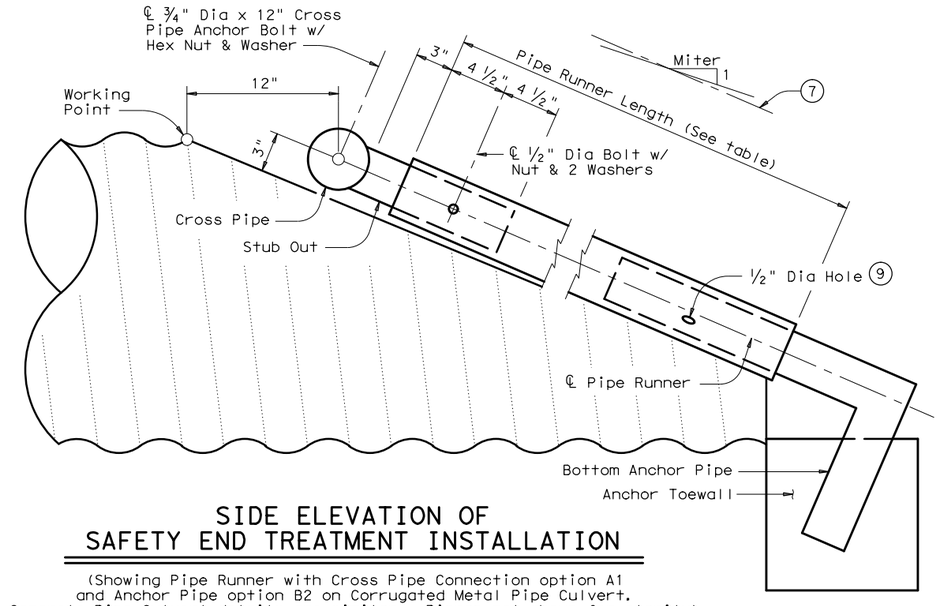

SIDE ELEVATION OF SAFETY END TREATMENT INSTALLATION

(Showing Pipe Runner with Cross Pipe Connection option A1 and Anchor Pipe option B2 on Corrugated Metal Pipe Culvert. Concrete Pipe Culvert details are similar. Riprap not shown for clarity)

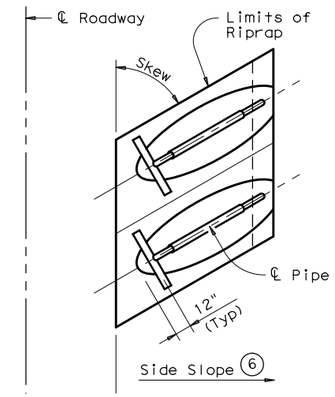

PLAN OF SKEWED INSTALLATION

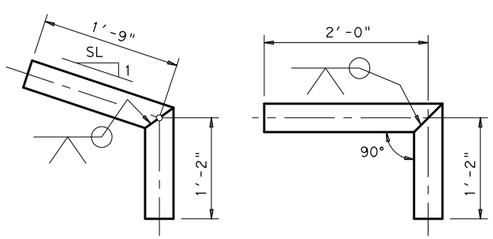

OPTION B1 OPTION B2

BOTTOM ANCHOR PIPE DETAILS (10)

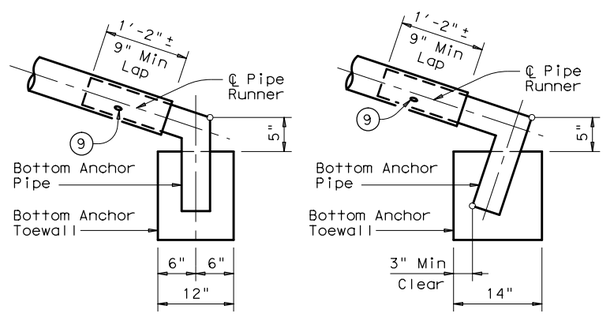

OPTION B1 OPTION B2

BOTTOM ANCHOR TOEWALL DETAILS

(Culvert & Riprap not shown for clarity)

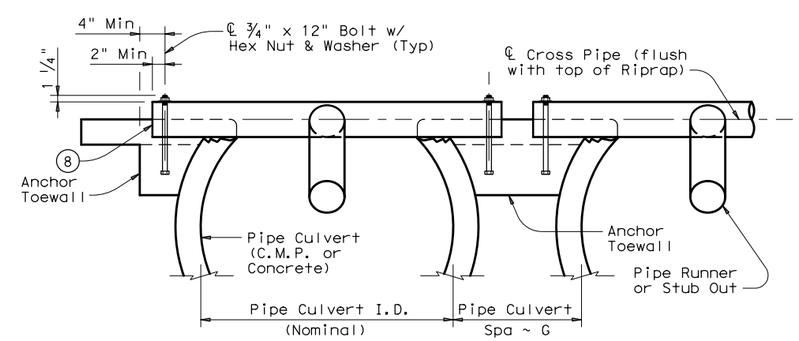

SHOWING CROSS PIPE & ANCHOR TOEWALL

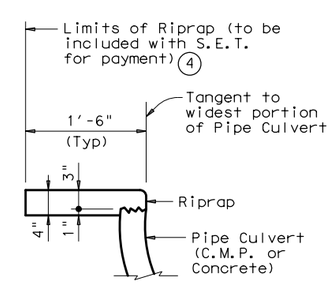

SHOWING TYPICAL PIPE CULVERT & RIPRAP

SECTION A-A

(4) Riprap placed beyond the limits shown will be paid as Concrete Riprap in accordance with Item 432, "Riprap".

(6) Recommended values of side slope are 3:1, 4:1, & 6:1. All quantities, calculations, and dimensions shown herein are based on these recommended values. Slope of 3:1 or flatter is required for vehicle safety.

(7) Note that actual slope of Pipe Runner may vary slightly from Side Slope of Riprap and trimmed Culvert Pipe edge.

(8) Care shall be taken to ensure that Riprap concrete does not flow into the Cross Pipe so as to permit disassembly of the bolted connection to allow cleanout access.

(9) After installation, the 1/2" hole shall be inspected to ensure that the lap of the Pipe Runner with the Bottom Anchor Pipe is adequate.

(10) At fabricator's option, a heat bend to a smooth 5" radius or a manufactured elbow (of the same material as the Runner) may be substituted for the mitered and welded joint in the Bottom Anchor Pipe.

GENERAL NOTES:

Pipe Runners are designed for a traversing load of 1,800 pounds at yield as recommended by Research Report 280-1, "Safety Treatment of Roadside Cross-Drainage Structures", Texas Transportation Institute, March 1981.

The Safety End Treatments shown herein are intended for use in those installations where out of control vehicles are likely to traverse the openings approximately perpendicular to the Pipe Runners.

Riprap and all necessary inverts shall be Concrete Riprap conforming to the requirements of Item 432, "Riprap".

Synthetic fibers listed on the "Fibers for Concrete" Material Producer List (MPL) may be used in lieu of steel reinforcing in riprap concrete unless noted otherwise.

Payment for riprap and toewall is included in the Price Bid for each Safety End Treatment.

Pipe Runners, Cross Pipes, and Anchor Pipes shall conform to the requirements of ASTM A53 (Type E or S, Grade B), ASTM A500 (Grade B), or API 5LX52.

Bolts and nuts shall conform to ASTM A307.

All steel components, except concrete reinforcing, shall be galvanized after fabrication. Galvanizing damaged during transport or construction shall be repaired in accordance with the specifications.

DISCLAIMER:
The use of this standard is governed by the "Texas Engineering Practice Act". No warranty of any kind is made by TxDOT for any purpose whatsoever. TxDOT assumes no responsibility for the conversion of this standard to other formats or for incorrect results or damages resulting from its use.

DATE:
FILE:

Texas Department of Transportation — Bridge Division Standard

SAFETY END TREATMENT

FOR 12" DIA TO 60" DIA PIPE CULVERTS TYPE II ~ CROSS DRAINAGE

SETP-CD

FILE: setpcdse.dgn	DN: GAF	CK: CAT	DW: JRP	CK: GAF
©TxDOT February 2010	CONT	SECT	JOB	HIGHWAY
REVISIONS				
11-10: Add note for synthetic fibers.	DIST	COUNTY		SHEET NO. 248

	Size	MAX DEPTH = 15 ft. to top of BASE SLAB										MAX DEPTH = 25 ft. to top of BASE SLAB										Min Height (See Gen Note 3)	Max HOLE DIA (See Fab Note 2)	Max KO DIA (See Fab Note 2)
		Base Slab			Base Unit or Riser Walls			Below Grade Slab (w/PJB) Reducing Slab (w/PB)				Base Slab			Base Unit or Riser Walls			Below Grade Slab (w/PJB) Reducing Slab (w/PB)						
		Short Span Reinf Steel Area	Long Span Reinf Steel Area	Thickness	Short Span Reinf Steel Area	Long Span Reinf Steel Area	Thickness	Reduced Riser Size	Short Span Reinf Steel Area	Long Span Reinf Steel Area	Thickness	Short Span Reinf Steel Area	Long Span Reinf Steel Area	Thickness	Short Span Reinf Steel Area	Long Span Reinf Steel Area	Thickness	Reduced Riser Size	Short Span Reinf Steel Area	Long Span Reinf Steel Area	Thickness			
	X x Y	Ashort	Along	BS	Bshort	Blong	W	RWSxRWL or ID	Dshort	Dlong	TS	Ashort	Along	BS	Bshort	Blong	W	RWSxRWL or ID	Dshort	Dlong	TS	BH MIN	HOLE DIA	KO DIA
	ft.	in^2/ft	in^2/ft	in.	in^2/ft	in^2/ft	in.	ft. **	in^2/ft	in^2/ft	in.	in^2/ft	in^2/ft	in.	in^2/ft	in^2/ft	in.	ft. **	in^2/ft	in^2/ft	in.	ft.	in.	in.
Precast Junction Box (PJB)	3x3	0.23	0.23	6	0.19	0.19	6	N/A	0.37	0.37	9	0.29	0.29	6	0.24	0.24	6	N/A	0.37	0.37	9	3.5	36	36
	4x4	0.29	0.29	6	0.24	0.24	6	N/A	0.41	0.41	9	0.47	0.47	6	0.38	0.38	6	N/A	0.41	0.41	9	4.5	48	48
	3x5	0.29	0.18	6	0.19	0.35	6	N/A	0.48	0.48	9	0.39	0.18	6	0.23	0.59	6	N/A	0.48	0.48	9	3.5	36/60	36/60
	4x5	0.36	0.18	6	0.22	0.34	6	N/A	0.42	0.42	9	0.53	0.26	6	0.39	0.59	6	N/A	0.42	0.42	9	4.5	48/60	48/60
	5x5	0.36	0.36	6	0.34	0.34	6	N/A	0.43	0.43	9	0.62	0.62	6	0.59	0.59	6	N/A	0.43	0.43	9	5.5	60	60
	5x6	0.27	0.27	9	0.34	0.45	6	N/A	0.48	0.48	9	0.47	0.45	9	0.38	0.54	8	N/A	0.48	0.48	9	5.5	60/72	60/72
	6x6	0.27	0.27	9	0.45	0.45	6	N/A	0.56	0.56	9	0.52	0.52	9	0.54	0.54	8	N/A	0.56	0.56	9	6.5	72	72
	8x8	0.46	0.46	9	0.51	0.51	8	N/A	0.45	0.45	12	0.87	0.87	9	0.59	0.59	10	N/A	0.45	0.45	12	8.5	96	72
Precast Base (PB)	3x3	0.23	0.23	6	0.19	0.19	6	N/A	N/A	N/A	N/A	0.29	0.29	6	0.24	0.24	6	N/A	N/A	N/A	N/A	3.5	36	36
	4x4	0.29	0.29	6	0.24	0.24	6	N/A	N/A	N/A	N/A	0.47	0.47	6	0.38	0.38	6	N/A	N/A	N/A	N/A	4.5	48	48
	3x5	0.29	0.18	6	0.19	0.35	6	3x3	0.30	0.34	9	0.39	0.18	6	0.23	0.59	6	3x3	0.40	0.40	9	3.5	36/60	36/60
	4x5	0.36	0.18	6	0.22	0.34	6	3x3	0.30	0.30	9	0.53	0.26	6	0.39	0.59	6	3x3	0.46	0.37	9	4.5	48/60	48/60
	4x5	0.36	0.18	6	0.22	0.34	6	4x4	0.30	0.30	9	0.53	0.26	6	0.39	0.59	6	4x4	0.39	0.39	9	4.5	48/60	48/60
	4x5	0.36	0.18	6	0.22	0.34	6	48"	0.39	0.39	9	0.53	0.26	6	0.39	0.59	6	48"	0.47	0.47	9	4.5	48/60	48/60
	4x5	0.36	0.18	6	0.22	0.34	6	3x5	0.33	0.40	9	0.53	0.26	6	0.39	0.59	6	3x5	0.48	0.48	9	4.5	48/60	48/60
	5x5	0.36	0.36	6	0.34	0.34	6	3x3	0.34	0.34	9	0.62	0.62	6	0.59	0.59	6	3x3	0.53	0.53	9	5.5	60	60
	5x5	0.36	0.36	6	0.34	0.34	6	4x4	0.36	0.36	9	0.62	0.62	6	0.59	0.59	6	4x4	0.64	0.64	9	5.5	60	60
	5x5	0.38	0.38	6	0.34	0.34	6	48"	0.36	0.36	9	0.62	0.62	6	0.59	0.59	6	48"	0.64	0.64	9	5.5	60	60
	5x5	0.36	0.36	6	0.34	0.34	6	3x5	0.34	0.40	9	0.62	0.62	6	0.59	0.59	6	3x5	0.53	0.53	9	5.5	60	60
	5x6	0.31	0.31	9	0.34	0.45	6	3x3	0.34	0.34	9	0.47	0.45	9	0.38	0.54	8	3x3	0.61	0.50	9	5.5	60/72	60/72
	5x6	0.27	0.27	9	0.34	0.45	6	4x4	0.36	0.45	9	0.47	0.45	9	0.38	0.54	8	4x4	0.74	0.57	9	5.5	60/72	60/72
	5x6	0.29	0.29	9	0.34	0.45	6	48"	0.36	0.45	9	0.47	0.45	9	0.38	0.54	8	48"	0.74	0.57	9	5.5	60/72	60/72
	5x6	0.29	0.29	9	0.34	0.45	6	3x5	0.45	0.45	9	0.47	0.45	9	0.38	0.54	8	3x5	0.61	0.61	9	5.5	60/72	60/72
	6x6	0.29	0.29	9	0.45	0.45	6	3x3	0.41	0.41	9	0.52	0.52	9	0.54	0.54	8	3x3	0.74	0.74	9	6.5	72	72
	6x6	0.27	0.27	9	0.45	0.45	6	4x4	0.45	0.45	9	0.52	0.52	9	0.54	0.54	8	4x4	0.87	0.87	9	6.5	72	72
	6x6	0.29	0.29	9	0.45	0.45	6	48"	0.45	0.45	9	0.52	0.52	9	0.54	0.54	8	48"	0.87	0.87	9	6.5	72	72
	6x6	0.29	0.29	9	0.45	0.45	6	3x5	0.45	0.45	9	0.52	0.52	9	0.54	0.54	8	3x5	0.87	0.87	9	6.5	72	72
	8x8	0.52	0.52	9	0.51	0.51	8	3x3	0.61	0.61	12	0.91	0.91	9	0.70	0.70	10	3x3	0.85	0.85	12	8.5	96	72
	8x8	0.52	0.52	9	0.51	0.51	8	4x4	0.70	0.70	12	0.87	0.87	9	0.70	0.70	10	4x4	1.01	1.01	12	8.5	96	72
	8x8	0.52	0.52	9	0.51	0.51	8	48"	0.70	0.70	12	0.87	0.87	9	0.70	0.70	10	48"	1.01	1.01	12	8.5	96	72
	8x8	0.52	0.52	9	0.51	0.51	8	3x5	0.70	0.85	12	0.87	0.87	9	0.70	0.70	10	3x5	1.01	1.01	12	8.5	96	72

** Unless otherwise indicated.

DISCLAIMER:
The use of this standard is governed by the "Texas Engineering Practice Act". No warranty of any kind is made by TxDOT for any purpose whatsoever. TxDOT assumes no responsibility for the conversion of this standard to other formats or for incorrect results or damages resulting from its use.

FABRICATION NOTES:
1. Maximum spacing of reinforcement is 8".
2. At manufacturer's option, provide cast or cored holes or thin wall panels (KO) to the maximum diameter shown for each. When no penetration is required, it is acceptable to provide a wall with no sectional reduction.

GENERAL NOTES:
1. Precast Junction Box consists of base slab, base unit, risers (as required), and below grade slab. See sheet PJB for details.
2. Precast Base consists of base slab, base unit, risers (as required), reducing slab (as required), and reduced risers (as required). See sheet PB for details.
3. Min Height shown is for stock base units. Use stock base units whenever practical. Smaller height base units can be used in special installation circumstances, when noted elsewhere in the plans. Absolute minimum height of base units is 2'-6".

HL93 LOADING

Texas Department of Transportation — Bridge Division Standard

DESIGN DATA FOR PRECAST BASE AND JUNCTION BOX

PDD

FILE: prestd10.dgn	DN: TxDOT	CK: TxDOT	DW: TxDOT	CK: TxDOT
©TxDOT January 2015	CONT	SECT	JOB	HIGHWAY
REVISIONS				
	DIST	COUNTY		SHEET NO.
				249

DATE:
FILE:

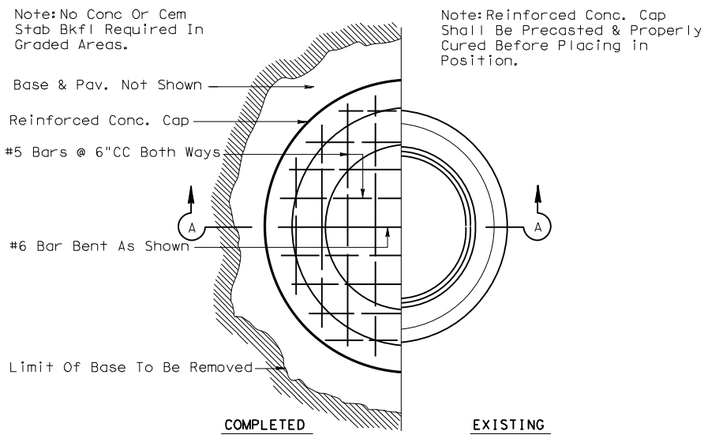

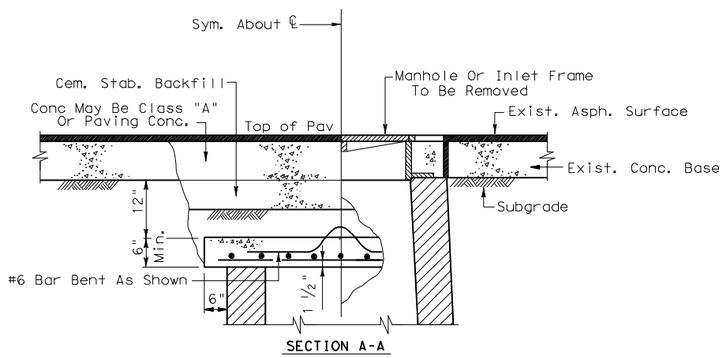

DETAIL SHOWING METHOD OF CAPPING ABANDONED MANHOLES OR INLETS (GRADED OR PAVED AREAS)

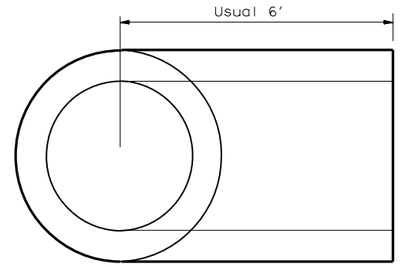

Note: Jointing Material Shall Conform To Requirements Of Item "Reinforced Concrete Pipe." Material For Tees Shall Conform To Requirements Of Item "Reinforced Concrete Pipe." Payment For Tee To Be In Accordance With Item "Reinforced Concrete Pipe."

PRECAST STORM SEWER TEE

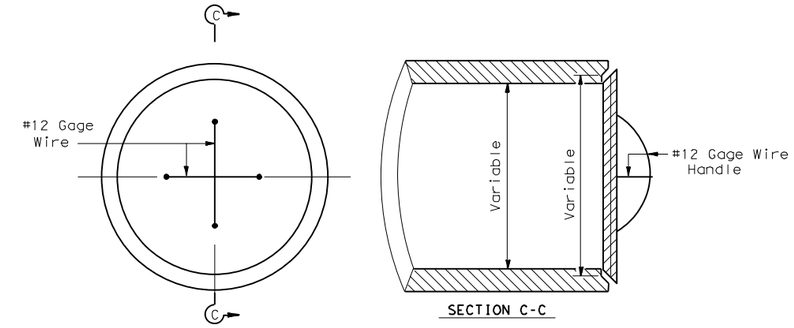

Note: The Price Of Plug Shall Be Subsidiary To The Unit Bid Price For Pipe Sewer Or RCP. Mortar Joints To Be Used As Directed By The Engineer. Removal Of The Existing Plugs For Storm Sewer Or RCP Conns. Shall Be Considered Incidental To Item "Excavation And Backfill For Structures."

Concrete Plug For End Of Pipe Culvert Or Sewer

CONCRETE PLUG FOR PIPE

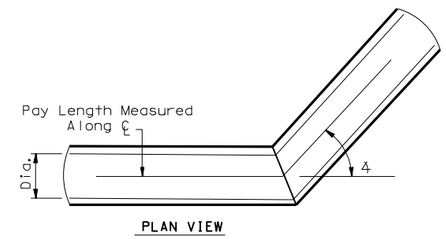

BENDING DETAIL

Note: Bending Of Proposed Pipe Sewer Or RCP In A Vertical & /Or Horizontal Plane Shall Be Accomplished By The Use Of A "Pipe Collar" Or A "Precast Elbow", As Approved By The Engineer.
Price Of "Pipe Collar" Or, "Precast Elbow" Shall Be Subsidiary To The Unit Prices Bid For Item Reinforced Concrete Pipe.
Pay Length Measurement To Be Along Horizontal ℄ & Horizontal Plane Of Pipes.

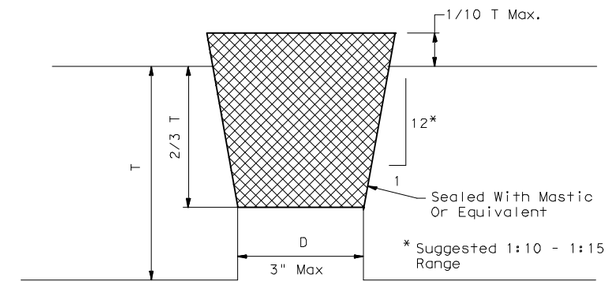

T = Wall Thickness On Top Of Box Or Pipe
D = Diameter Of Lifting Hole

Minimum Length Of Plug Is 2/3 T +/-
Minimum Diameter At Bottom Of Plug = D - 1/8"
Maximum 1/10 T Of Plug Not Seated In Lifting Hole

Note: The Plug Shall Be Cast With The Same Taper As The Lifting Hole.

DETAIL OF PLUG FOR LIFTING HOLES IN RCB AND RCP

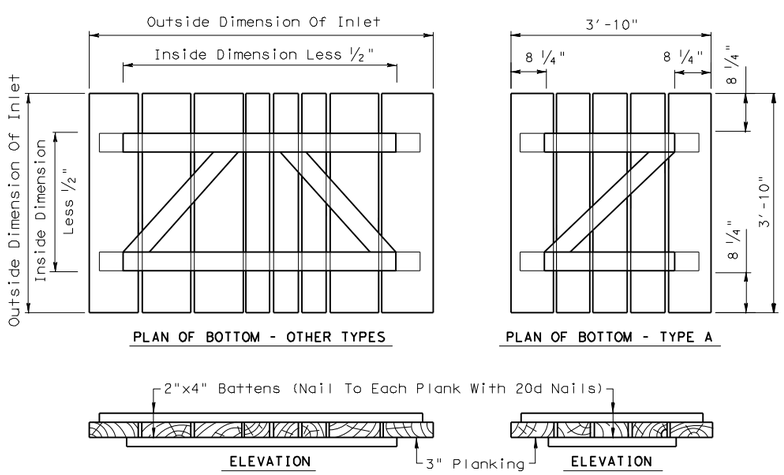

TEMPORARY COVERS FOR ALL TYPES OF INLETS

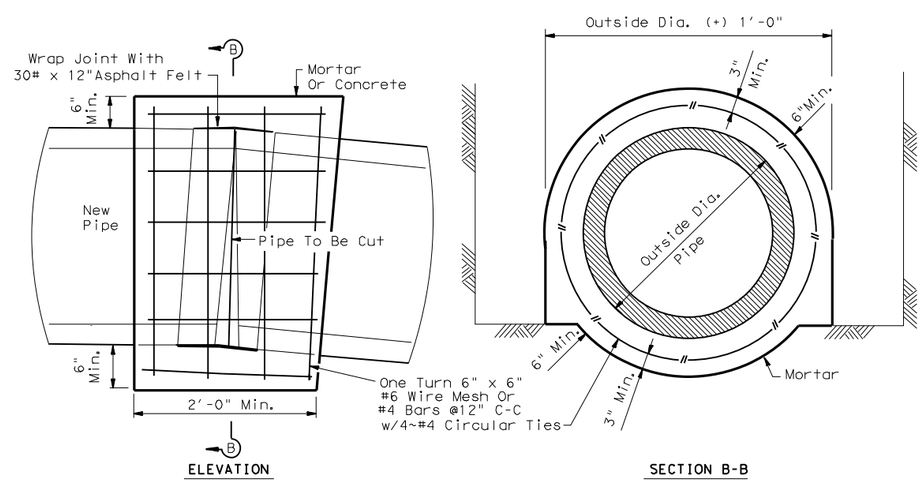

PIPE COLLAR DETAIL

For Horizontal Or Vertical Placement

d = Diameter
R = Radius

Texas Department of Transportation
Houston District (Bridge)

MISCELLANEOUS SEWER DETAILS

MSD

FILE: STDD11.DGN	DN: TxDOT	CK: TxDOT	DW: TxDOT	CK:			
© TxDOT Mar 2004	DISTRICT	FED REG	PROJECT NO.				SHEET
REVISIONS 3/2015 2014 Specs	HOU	6					250
	COUNTY			CONTROL	SECT	JOB	HIGHWAY

STDD11.DGN

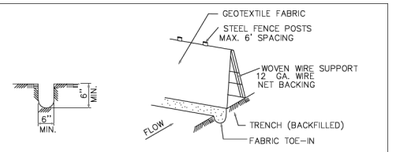

TRENCH CROSS SECTION SILT FENCE

GENERAL NOTES:

1. SILT FENCE LOCATED ADJACENT TO PLAYGROUNDS, PARKS, SIDEWALKS, AND OTHER LOCATIONS AS DETERMINED BY CITY OF CEDAR PARK REPRESENTATIVES SHALL HAVE CITY APPROVED SAFETY CAPS ON ALL STEEL POSTS.

2. STEEL POSTS WHICH SUPPORT THE SILT FENCE SHALL BE INSTALLED ON A SLIGHT ANGLE TOWARD THE ANTICIPATED RUNOFF SOURCE.

3. POST MUST BE EMBEDDED A MINIMUM OF ONE FOOT. THE TOE OF THE SILT FENCE SHALL BE TRENCHED IN WITH A SPADE OR MECHANICAL TRENCHER, SO THAT THE DOWNSLOPE FACE OF THE TRENCH IS FLAT AND PERPENDICULAR TO THE LINE OF FLOW.

4. WHERE FENCE CAN NOT BE TRENCHED IN (E.G. PAVEMENT) WEIGHT FABRIC FLAP WITH WASHED GRAVEL ON UPHILL SIDE TO PREVENT FLOW UNDER FENCE. 6 INCHES DEEP AND 6 INCHES WIDE TO TIE TRENCH MUST BE A MINIMUM OF ALLOW FOR THE SILT FENCE FABRIC TO BE LAID IN THE GROUND AND BACKFILLED WITH COMPACTED MATERIAL.

5. SILT FENCE SHOULD BE SECURELY FASTENED TO EACH STEEL SUPPORT POST OR TO WOVEN WIRE, WHICH IS IN TURN ATTACHED TO THE STEEL FENCE POST.

6. INSPECTION SHALL BE MADE WEEKLY OR AFTER EACH RAINFALL EVENT AND REPAIR OR REPLACEMENT SHALL BE MADE PROMPTLY AS NEEDED.

7. SILT FENCE SHALL BE REMOVED WHEN THE SITE IS COMPLETELY STABILIZED SO AS NOT TO BLOCK OR IMPEDE STORM FLOW OR DRAINAGE. ACCUMULATED SILT SHALL BE REMOVED WHEN IT REACHES A DEPTH OF 6 INCHES.

8. THE SILT SHALL BE DISPOSED OF IN AN APPROVED SITE AND IN SUCH A MANNER AS TO NOT CONTRIBUTE TO ADDITIONAL SILTATION. STANDARD SYMBOL SF L=

REV. DATE: 09/13/01

CITY OF CEDAR PARK ENGINEERING DEPARTMENT	SILT FENCE	
DARWIN MARCHELL 09/13/2001 APPROVED DATE	ADOPTED: 09/13/2001 SCALE: N.T.S. INITIAL:	

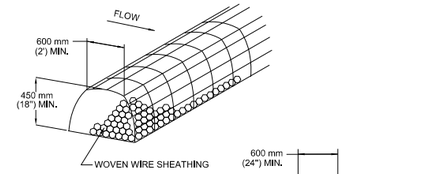

ROCK BERM

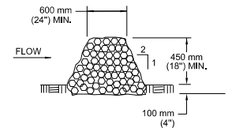

CROSS SECTION

STANDARD SYMBOL FOR ROCK BERM (RB)
— RB —

NOTES:

1. USE ONLY OPEN GRADED ROCK 75 to 125 mm (3 to 5") DIAMETER FOR ALL CONDITIONS.
2. THE ROCK BERM SHALL BE SECURED WITH A WOVEN WIRE SHEATHING HAVING MAXIMUM 25 mm (1") OPENING AND MINIMUM WIRE DIAMETER OF 12.9 mm (20 GAUGE).
3. THE ROCK BERM SHALL BE INSPECTED DAILY OR AFTER EACH RAIN, AND THE STONE AND/OR FABRIC CORE-WOVEN SHEATHING SHALL BE REPLACED WHEN THE STRUCTURE CEASES TO FUNCTION AS INTENDED, DUE TO SEDIMENT ACCUMULATION AMONG THE ROCKS, WASHOUT, CONSTRUCTION TRAFFIC DAMAGE, ETC.
4. IF SEDIMENT REACHES A DEPTH EQUAL TO ONE-THIRD THE HEIGHT OF THE BERM OR 150 mm (6"), WHICHEVER IS LESS, THE SEDIMENT SHALL BE REMOVED AND DISPOSED OF ON AN APPROVED SITE AND IN A MANNER THAT WILL NOT CREATE A SEDIMENTION PROBLEM.
5. WHEN THE SITE IS COMPLETELY STABILIZED,THE BERM AND ACCUMULATED SEDIMENT SHALL BE REMOVED AND DISPOSED OF IN AN APPROVED MANNER.

CITY OF AUSTIN WATERSHED PROTECTION DEPARTMENT	ROCK BERM	
RECORD COPY SIGNED BY MORGAN BYARS 8/24/2010 ADOPTED	THE ARCHITECT/ENGINEER ASSUMES RESPONSIBILITY FOR APPROPRIATE USE OF THIS STANDARD.	STANDARD NO. 639S-1

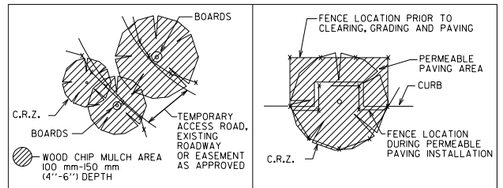

LINEAR CONSTRUCTION THROUGH TREES

TREES IN PAVING AREA

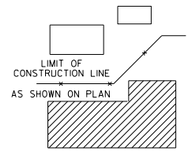

NATURAL AREAS

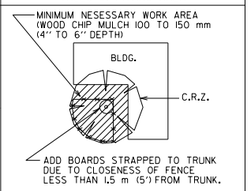

TREES NEAR CONSTRUCTION ACTIVITY

CRITICAL ROOT ZONE (C.R.Z.) RADIUS = 12 mm PER mm (1 FT. PER INCH) OF TRUNK DIAMETER

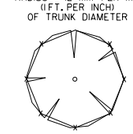

INDIVIDUAL TREE

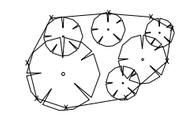

GROUP OF TREES

CITY OF AUSTIN WATERSHED PROTECTION DEPARTMENT	TREE PROTECTION FENCE LOCATIONS	
RECORD COPY SIGNED BY J. PATRICK MURPHY 11/15/99 ADOPTED	THE ARCHITECT/ENGINEER ASSUMES RESPONSIBILITY FOR APPROPRIATE USE OF THIS STANDARD.	STANDARD NO. 610S-1

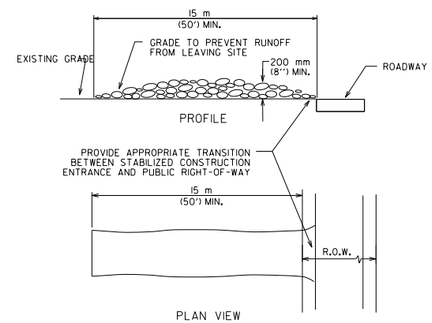

NOTES:
1. STONE SIZE: 75-125 mm (3-5") OPEN GRADED ROCK.
2. LENGTH: AS EFFECTIVE BUT NOT LESS THAN 15 m (50').
3. THICKNESS: NOT LESS THAN 200 mm (8").
4. WIDTH: NOT LESS THAN FULL WIDTH OF ALL POINTS OF INGRESS/EGRESS.
5. WASHING: WHEN NECESSARY, VEHICLE WHEELS SHALL BE CLEANED TO REMOVE SEDIMENT PRIOR TO ENTRANCE ONTO PUBLIC ROADWAY. WHEN WASHING IS REQUIRED, IT SHALL BE DONE ON AN AREA STABILIZED WITH CRUSHED STONE AND DRAINS INTO AN APPROVED TRAP OR SEDIMENT BASIN. ALL SEDIMENT SHALL BE PREVENTED FROM ENTERING ANY STORM DRAIN, DITCH OR WATERCOURSE USING APPROVED METHODS.
6. MAINTENANCE: THE ENTRANCE SHALL BE MAINTAINED IN A CONDITION THAT WILL PREVENT TRACKING OR FLOWING OF SEDIMENT ONTO PUBLIC ROADWAY. THIS MAY REQUIRE PERIODIC TOP DRESSING WITH ADDITIONAL STONE AS CONDITIONS DEMAND, AS WELL AS REPAIR AND CLEAN OUT OF ANY MEASURE DEVICES USED TO TRAP SEDIMENT. ALL SEDIMENTS THAT IS SPILLED, DROPPED, WASHED OR TRACKED ONTO PUBLIC ROADWAY MUST BE REMOVED IMMEDIATELY.
7. DRAINAGE: ENTRANCE MUST BE PROPERLY GRADED OR INCORPORATE A DRAINAGE SWALE TO PREVENT RUNOFF FROM LEAVING THE CONSTRUCTION SITE.

CITY OF AUSTIN WATERSHED PROTECTION DEPARTMENT	STABILIZED CONSTRUCTION ENTRANCE	
RECORD COPY SIGNED BY J. PATRICK MURPHY 5/23/00 ADOPTED	THE ARCHITECT/ENGINEER ASSUMES RESPONSIBILITY FOR APPROPRIATE USE OF THIS STANDARD.	STANDARD NO. 641S-1

NOTES:

1. MATERIAL - THE FPBRIC MUST CORRESPOND TO THE FOLLWNG REQUIREMENTS:

PROPERTY	ASTM TEST METHOD	REQUIREMENTS
FABRIC WEIGHT	D 3776	≥3.0 OUNCES/SQUARE YPAD
ULTRAVIOLET (UV) RADIATION STABILITY	D 4355	70% STRENGTH RETAINB) MIN., AFTER 500 HOURS IN XENON ARC DEVICE
MUUEN BURST STRENGTH	D 3786	≥120 POUND PER SQUPRE INCH
WATER FLOW RATE	D 4491	≥ 275 GALLONS/MINUTE/SQUARE FEET

2. THIS MATERIAL SHOULD HAVE A MAXIMUM EXPECTED USEFUL LIFE OF APPROXIMATELY EIGHTEEN (18) MONTHS. THE INLET PROTECTION DEVICES SHOULD BE CONSTRUCTED IN A MANNER THAT WILL FACILITATE CLEAN OUT AND DISPOSAL OF TRAPPED SEDIMENT WILE MINIMIZING INTERFERENCE WITH CONSTRUCTION ACT IVITIES. THEY SHOU LD ALSO BE CONSTRUCTED SUCH THAT ANY PONDING OF STORM WATER WILL NOT CAUSE EXCESSIVE R.O.W. FLOODING (I.E. <4 INCHES OF STANDING WATER) OR DPMAGETO THESTRUCTURE OR ADJACENT AREAS.

3. COVERAGE - THE FABRIC/WIRE SHOULD COMPLETELY COVER THE OPENING OF THE INLET AND DEVICES SHOULD BE INST ALLED WITHOUT PROTRUDING PARTS THAT COULD BE A TRAFFIC, WORKER, OR PEDESTRIAN HAZARD. WHERE SECTIONS OF THE FABRIC OVERLAP, THEY SHALL OVERLAP AT LEAST THREE (3) INCHES.

4. THE INLET FILTER SHA LL BE ATTACHED IN A WAY THAT THEY CAN EASILY BE RE MOVED AND ARE NOT SECURED OR ATTACHED BY THE USE OF SAND BAGS. THE INLET FILTER MUST BE REMOMD UPON COMPLETION OF WORK . IF REMOVAL DAMAGES THE CONCREE CURB, THE CURB MUST BE REPAIRED IMMEDIATELY.

5. DAILY INSPECTION SHALL BE MADE BY THE CONTRACTOR AND SILT ACCUMULATION MUST BE REMOVED WHEN THE DEPTH REACHES 50 MM (2 INCHES) INCHES OR ONE -THIRD THE HEIGHT OF THE INLET THROAT, AND DISPOSED OF IN A MANNER WHICH WILL NOT CWSE ADDITIONAL SILTATION.

6. CONTRACTOR SH ALL MONITOR THE PERFORMANCE OF INLET PROTECTION DURING EACH RAINFALL E VENT AND IMMEDIATELY REMOVE THE INLET PROTECTIONS IF THE STORMWATER BEGINS TO OVERTOP THE CURB.

7. INLET PROTECTIONS SH ALL BE REMOVED AS SOON AS THE SOURCE OF SEDIMENT HAS ACHIEVED FINAL STABILIZATION CONDITIONS.

CITY OF AUSTIN WATERSHED PROTECTION DEPARTMENT	FILTER DIKE CURB INLET PROTECTION	
RECORD COPY SIGNED BY MAPI VIGIL 10/30/09 ADOPTED	THE ARCHITECT/ENGINEER ASSUMES RESPONSIBILITY FOR APPROPRIATE USE OF THIS STANDARD.	STANDARD NO. 628S-2

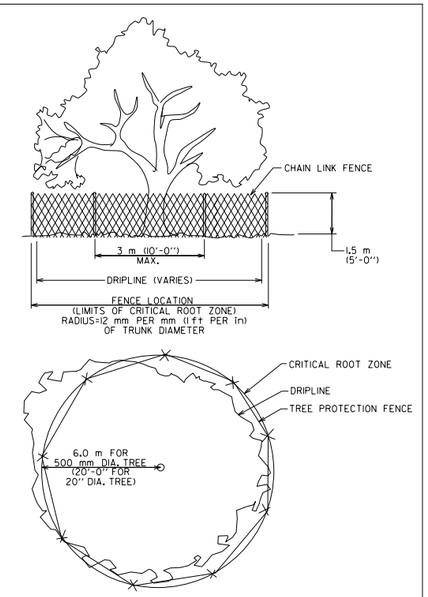

CITY OF AUSTIN WATERSHED PROTECTION DEPARTMENT	TREE PROPTECTION FENCE TYPE A - CHAIN LINK	
RECORD COPY SIGNED BY J. PATRICK MURPHY 11/15/99 ADOPTED	THE ARCHITECT/ENGINEER ASSUMES RESPONSIBILITY FOR APPROPRIATE USE OF THIS STANDARD.	STANDARD NO. 610S-2

NUMBER	DATE	REVISION	APPROVED

CEDAR PARK

Binkley & Barfield, Inc
consulting engineers
Texas Registration Number F-257

ANDERSON MILL ROAD
GASPAR BEND TO WHITESTONE BLVD
STANDARD DETAILS ENVIRONMENTAL

DESIGN BY:	GCC	SCALE: N/A
DRAWN BY:	DSH	
CHECKED BY:	DRE	
APPROVED BY:	BDR	SHEET:
PROJECT NO:	156402	
DATE:	10/6/2016	PAGE: 251

10/6/2016
8:51:12 AM
...\CADD\SHEETS\EVSD1*AM*01.dgn

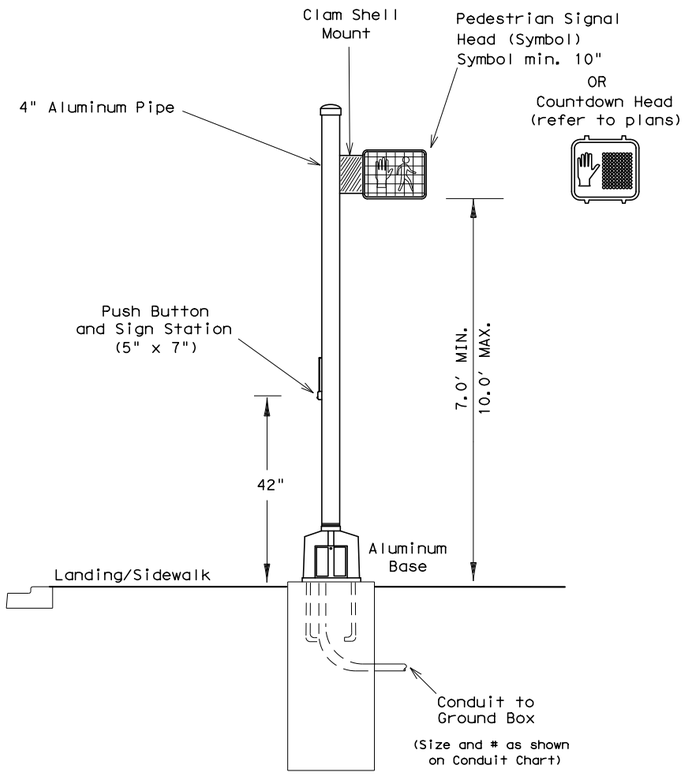

Refer to Standard Sheet TS-FD for details of pedestal pole foundation.

PEDESTAL POLE DETAILS

A separate 2/C wire is to be installed to each push button from the controller

Refer to Austin District General Notes for push button requirements.

PUSH BUTTON STATIONS FRONT VIEW

STANDARD

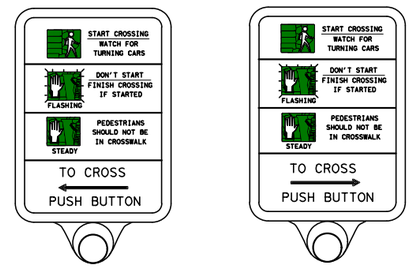

5" x 7" sign for pedestal pole
9" x 12" sign for standard signal pole

COUNTDOWN

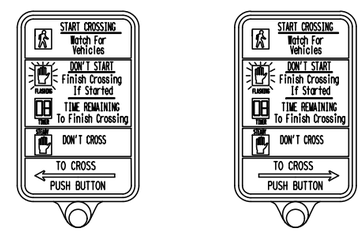

5" x 9" station/sign for pedestal pole
9" x 15" station/sign for standard signal pole

APS w/ COUNTDOWN

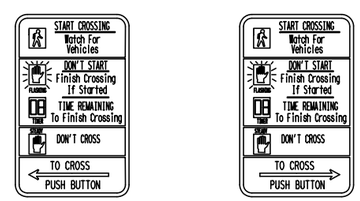

5" x 7" adhesive sign for pedestal pole and for standard signal pole

Adjustable Arrow - Inner arrow is embossed with small indicator light. Push Button can be part of sign assembly or separate. Button housing can be oval or circular.

Only install Double Arrow when called for in plans.

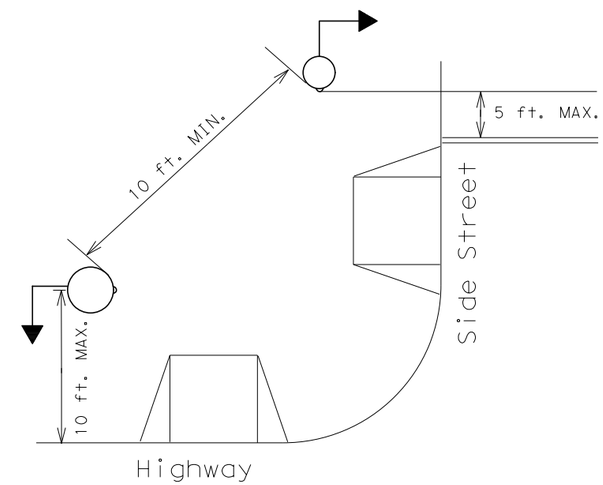

Refer to MUTCD SEC. 4E for guidance on accessible push button placement on one or two curb-cut ramps.

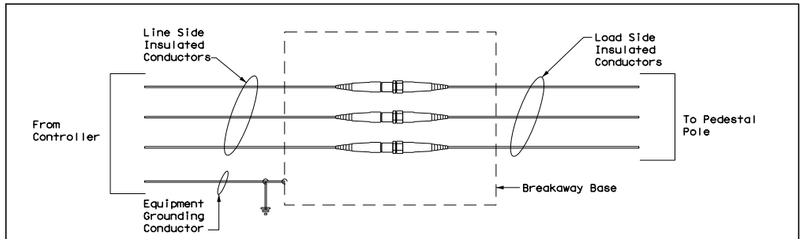

NON-FUSED BREAKAWAY ELECTRICAL CONNECTORS

Provide single pole non-fused watertight breakaway electrical connectors for frangible pedestal pole bases, as shown on TxDOT's MPL in the file "Roadway Illumination and Electrical Supplies." Approved models are listed under Item 685. For ungrounded (hot) conductors, install a breakaway connector with a dummy fuse slug). For grounded (neutral) conductors, install a breakaway connector with a white colored marking and a permanently installed dummy fuse (slug).

NO SCALE

Texas Department of Transportation
Austin District Traffic

PPA-14(AUS) PEDESTAL POLE ASSEMBLY

Austin District Standard

© TxDOT 2014

REVISIONS

STATE DISTRICT	FEDERAL REGION	FEDERAL AID PROJECT				SHEET
AUS	6					252
COUNTY		CONTROL	SECTION	JOB	HIGHWAY	
TRAVIS		-	-	-	RM 1431	

DISCLAIMER:
The use of this standard is governed by the "Texas Engineering Practice Act". No warranty of any kind is made by TxDOT for any purpose whatsoever. TxDOT assumes no responsibility for the conversion of this standard to other formats or for incorrect results or damages resulting from its use.

GENERAL NOTES FOR ALL ELECTRICAL WORK

1. The location of all conduits, junction boxes, ground boxes, and electrical services is diagrammatic and may be shifted to accommodate field conditions.

2. Provide new and unused materials. Ensure that all materials and installations comply with the applicable articles of the National Electrical Code (NEC), TxDOT standards and specifications, National Electrical Manufacturers Association (NEMA), and are listed by Underwriters Laboratories (UL) or a Nationally Recognized Testing Lab (NRTL). NRTLs such as Canadian Standard Association (CSA), Intertek Testing Services NA Inc., or FM Approvals LLC can be considered equivalent to UL. Where reference is made to NEMA listed devices, International Electrotechnical Commission (IEC) listed devices will not be considered an acceptable equal to a NEMA listed device. Acceptable devices may have both a NEMA and IEC listing. Faulty fabrication or poor workmanship in any material, equipment, or installation is justification for rejection. Replace or reinstall rejected material or equipment at no additional cost to the Department.

3. Miscellaneous nuts, bolts and hardware, except for high strength bolts, may be stainless steel when plans specify galvanized, provided the bolt size is ½ in. or less in diameter.

4. Provide the following test equipment as required by the Engineer to confirm compliance with the contract and the NEC: voltmeter, ammeter, megohm meter (1000 volt DC), ground resistance tester, torque wrenches, and torque screwdrivers. Ensure all equipment has been properly calibrated within the last year. Provide calibration certification to the Engineer upon request. Operate test equipment during inspection as requested by the Engineer.

5. Install grounding as shown on the plans and in accordance with the NEC. Ensure all metallic conduits; metal poles; luminaires; and metal enclosures are bonded to the equipment grounding conductor. Provide stranded bare copper or green insulated grounding conductors. Ground rods, connectors, and bonding jumpers are subsidiary to the various bid items.

6. When required by the Engineer, notify the Department in writing of materials from the Material Producers List (MPL) intended for use on each project. Prequalified materials are listed on the MPL on TxDOT's website under "Roadway Illumination and Electrical Supplies." No substitutions will be allowed for materials on this list.

CONDUIT

A. MATERIALS

1. Provide conduit, junction boxes, fittings, and hardware as per TxDOT Departmental Material Specification (DMS) 11030 "Conduit" and Item 618 "Conduit" of TxDOT's "Standard Specifications For Construction And Maintenance Of Highways, Streets, And Bridges," latest edition. Provide conduits listed under Item 618 on the MPL under "Roadway Illumination and Electrical Supplies." Provide conduit types according to the descriptive code or as shown on the plans. Do not substitute other types of conduits for those shown. Provide liquidtight flexible metal conduit (LFMC) when flexible conduit is called for on galvanized steel rigid metallic conduit (RMC) systems. Provide liquidtight flexible nonmetallic conduit (LFNC) when flexible conduit is called for on polyvinyl chloride (PVC) systems.

2. Provide galvanized steel RMC for all exposed conduits, unless otherwise shown on the plans. Properly bond all metal conduits.

3. Unless otherwise shown on the plans, provide junction boxes with a minimum size as shown in the following table, which applies to the greatest number of conductors entering the box through one conduit with no more than four conduits per box. When a mixture of conductor sizes is present, count the conductors as if all are of the larger size. For situations not applicable to the table, size junction boxes in accordance with NEC.

AWG	3 CONDUCTORS	5 CONDUCTORS	7 CONDUCTORS
#1	10" x 10" x 4"	12" x 12" x 4"	16" x 16" x 4"
#2	8" x 8" x 4"	10" x 10" x 4"	12" x 12" x 4"
#4	8" x 8" x 4"	10" x 10" x 4"	10" x 10" x 4"
#6	8" x 8" x 4"	8" x 8" x 4"	10" x 10" x 4"
#8	8" x 8" x 4"	8" x 8" x 4"	8" x 8" x 4"

4. Junction boxes with an internal volume of less than 100 cu. in. and supported by entering raceways must have threaded entries or hubs identified for the intended purpose and supported by connection of two or more rigid metal conduits. Secure conduit within 3 ft. of the enclosure or within 18 in. of the enclosure if all conduit entries are on the same side. Mechanically secure all junction boxes with an internal volume greater than 100 cu. inches.

5. Provide hot dipped galvanized cast iron or sand cast aluminum outlet boxes for junction boxes containing only 10 AWG or 12 AWG conductors. Do not use die cast aluminum boxes. Size outlet boxes according to the NEC.

6. Do not use intermediate metal conduit (IMC) or electrical metallic tubing (EMT) unless specifically required by the plan sheets. When EMT is called for, provide junction boxes made from galvanized steel sheeting, listed and approved for outdoor use, unless otherwise noted on the plans. Size all galvanized steel junction boxes in accordance with the NEC. Provide junction boxes for IMC conduit systems that meet the same requirements for junction boxes used with RMC systems.

7. Provide PVC junction boxes intended for outdoor use on PVC conduit systems, unless otherwise noted on the plans.

8. Provide PVC elbows in PVC conduit systems, unless otherwise shown on the plans. Use only a flat, high tensile strength polyester fiber pull tape for pulling conductors through the PVC conduit system. When galvanized steel RMC elbows are specifically called for in the plans and any portion of the RMC elbow is buried less than 18 in., ground the RMC elbow by means of a grounding bushing on a rigid metal extension. Grounding of the rigid metal elbow is not required if the entire RMC elbow is encased in a minimum of 2 in. of concrete. PVC extensions are allowed on these concrete encased rigid metal elbows. RMC or PVC elbows are subsidiary to various bid items.

9. When required, provide High-Density Polyethylene (HDPE) conduit with factory installed internal conductors according to Item 622 "Duct Cable." At the Contractor's request and with approval by the Engineer, substitute HDPE conduit with no conductors for bored schedule 40 or schedule 80 PVC conduit bid under Item 618. Ensure bored HDPE substituted for PVC is schedule 40 and of the same size PVC called for in the plans. Ensure the substituted HDPE meets the requirements of Item 622, except that the conduit is supplied without factory-installed conductors. Make the transition of the HDPE conduit to PVC (or RMC elbow when required) at the bore pit. Provide conduit of the size and schedule as shown on the plans. Do not extend substituted conduit into ground boxes or foundations. Provide PVC or galvanized steel RMC elbows as called for at all ground boxes and foundations.

10. Use two-hole straps when supporting 2 in. and larger conduits. On electrical service poles, properly sized stainless steel or hot dipped galvanized one-hole standoff straps are allowed on the service riser conduit.

B. CONSTRUCTION METHODS

1. Provide and install expansion joint conduit fittings on all structure-mounted conduits at the structure's expansion joints to allow for movement of the conduit. In addition, provide and install expansion joint fittings on all continuous runs of galvanized steel RMC conduit externally exposed on structures such as bridges at maximum intervals of 150 ft. When requested by the project Engineer, supply manufacturer's specification sheet for expansion joint conduit fittings. Repair or replace expansion joint fittings that do not allow for movement at no additional cost to the Department. Provide the method of determining the amount of expansion to the Engineer upon request. Do not use LFMC or LFNC as a substitute for the required expansion conduit fittings.

2. Space all conduit supports at maximum intervals of 5 ft. Install conduit spacers when attaching metal conduit to surface of concrete structures. See "Conduit Mounting Options" on ED(2). Install conduit support within 3 ft. of all enclosures and conduit terminations.

3. Do not attach conduit supports directly to pre-stressed concrete beams except as shown specifically in the plans or as approved by the Engineer.

4. Unless otherwise shown on the plans, jack or bore conduit placed beneath existing roadways, driveways, sidewalks, or after the base or surfacing operation has begun. Backfill and compact the bore pits below the conduit per Item 476 "Jacking, Boring, or Tunneling Pipe or Box" prior to installing conduit or duct cable to prevent bending of the connections.

5. When placing conduit in the sub-grade of new roadways, backfill all trenches with excavated material unless otherwise noted on the plans. When placing conduit in the sub-base of new roadways, backfill all trenches with cement-stabilized base as per requirements of Items 110 "Excavation", 400 "Excavation and Backfill for Structures", 401 "Flowable Backfill", 402 "Trench Excavation Protection", and 403 "Temporary Special Shoring."

6. Provide and place warning tape approximately 10 in. above all trenched conduit as per Item 618.

7. During construction, temporarily cap or plug open ends of all conduit and raceways immediately after installation to prevent entry of dirt, debris and animals. Temporary caps constructed of durable duct tape are allowed. Tightly fix the tape to the conduit opening. Clean out the conduit and prove it clear in accordance with Item 618 prior to installing any conductors.

8. Ensure conduit entry into the top of any enclosure is waterproof by installing conduit sealing hubs or using boxes with threaded bosses. This includes surface mounted safety switches, meter cans, service enclosures, auxiliary enclosures and junction boxes. Grounding bushings on water tight sealing hubs are not required.

9. Fit the ends of all PVC conduit terminations with bushings or bell end fittings. Provide and install a grounding type bushing on all metal conduit terminations.

10. Install a bonding jumper from each grounding bushing to the nearest ground rod, grounding lug, or equipment grounding conductor. Ensure all bonding jumpers are the same size as the equipment grounding conductor. Bonding of conduit used as a casing under roadways for duct cable is not required, if the duct extends the full length through the casing.

11. At all electrical services, install a 6 AWG solid copper grounding electrode conductor.

12. Place conduits entering ground boxes so that the conduit openings are between 3 in. and 6 in. from the bottom of the box. See the ground box detail on sheet ED(4).

13. Seal ends of all conduits with duct seal, expandable foam, or by other methods approved by the Engineer. Seal conduit immediately after completion of conductor installation and pull tests. Do not use duct tape as a permanent conduit sealant. Do not use silicone caulk as a conduit sealant.

14. File smooth the cut ends of all mounting strut and conduit. Before installing, paint the field cut ends of all mounting strut and RMC (threaded or non-threaded) with zinc rich paint (94% or more zinc content) to alleviate overspray. Use zinc rich paint to touch up galvanized material as allowed under Item 445 "Galvanizing." Do not paint non-galvanized material with a zinc rich paint as an alternative for materials required to be galvanized.

Texas Department of Transportation

Traffic Operations Division Standard

ELECTRICAL DETAILS CONDUITS & NOTES

ED(1)-14

FILE:	ed1-14.dgn	DN:	CK:	DW:	CK:
© TxDOT	October 2014	CONT	SECT	JOB	HIGHWAY
	REVISIONS	2102	-	-	RM 1431
		DIST		COUNTY	SHEET NO.
		AUS		TRAVIS	253

71A

DATE:
FILE:

DISCLAIMER:
The use of this standard is governed by the "Texas Engineering Practice Act". No warranty of any kind is made by TxDOT for any purpose whatsoever. TxDOT assumes no responsibility for the conversion of this standard to other formats or for incorrect results or damages resulting from its use.

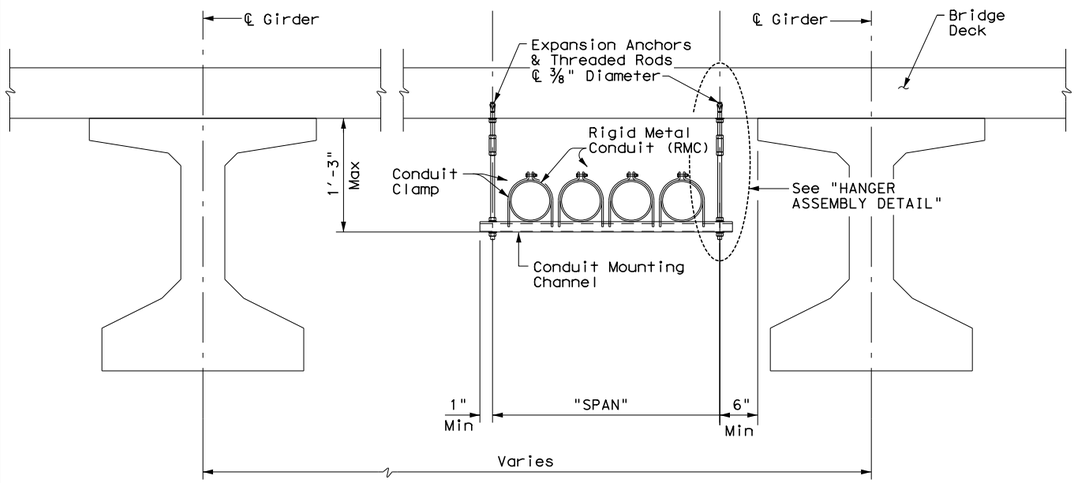

CONDUIT HANGING DETAIL

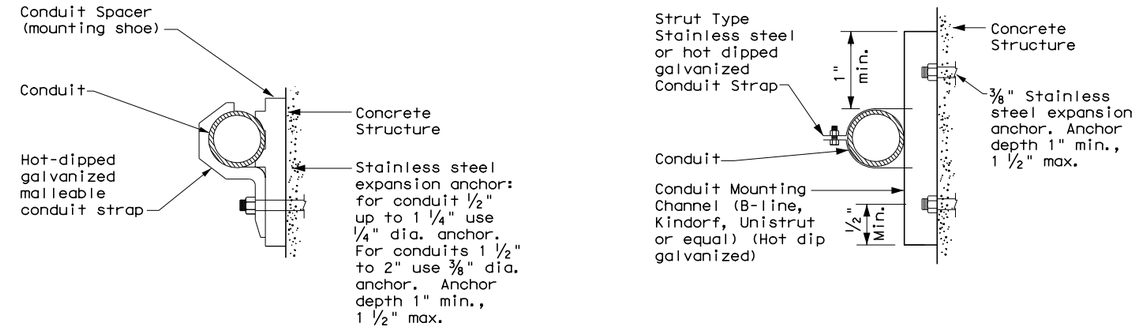

CONDUIT MOUNTING OPTIONS

Attachment to concrete surfaces
See ED(1)B.2

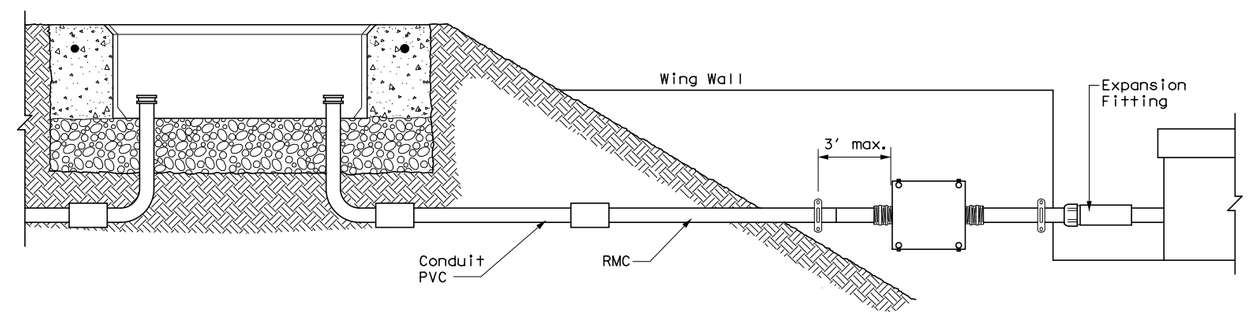

TYPICAL CONDUIT ENTRY TO BRIDGE STRUCTURE DETAIL

CONDUIT MOUNTING CHANNEL		
"SPAN"	"W" x "H"	"T"
less than 2'	1 5/8" x 1 3/8"	12 Ga.
2'-0" to 2'-6"	1 5/8" x 1 5/8"	12 Ga.
>2'-6" to 3'-0"	1 5/8" x 2 7/16"	12 Ga.

Channels with round or short slotted hole patterns are allowed, if the load carrying capacity is not reduced by more than 15%.

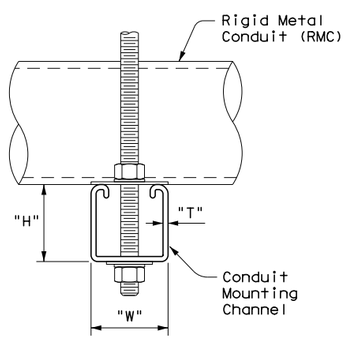

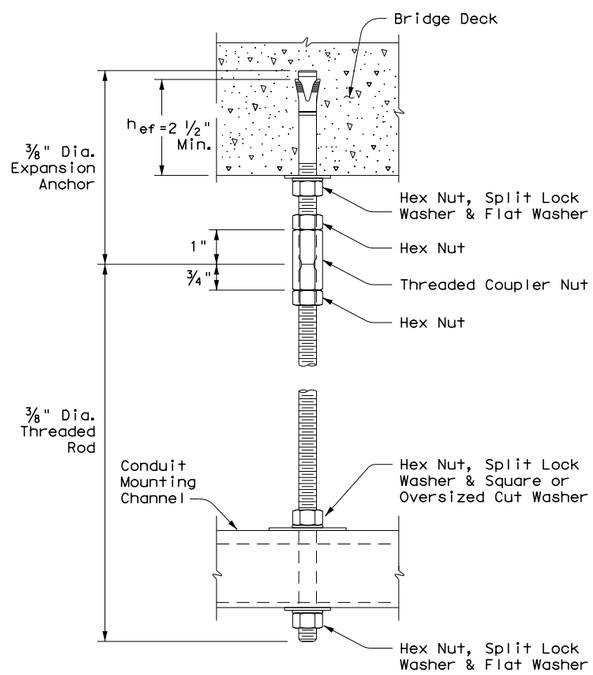

HANGER ASSEMBLY DETAIL

ELECTRIC CONDUIT TO BRIDGE DECK ATTACHMENT

EXPANSION ANCHOR NOTES FOR BRIDGE DECK ATTACHMENT

1. Use torque controlled mechanical expansion anchors that are approved for use in cracked concrete by the International Code Council, Evaluation Service (ICC-ES). The chosen anchor product shall have a designated ICC-ES Evaluation Report number, and its approval status shall be maintained on the ICC-ES website under Division 031600 for Concrete Anchors.
2. Unless otherwise approved by the Engineer: do not use adhesive anchors; do not use expansion anchors that are not included in the ICC-ES approval list; and do not use expansion anchors that are only approved for use in uncracked concrete.
3. Use anchors manufactured with stainless steel expansion wedges. Anchors manufactured with carbon steel expansion wedges are not allowed. Anchor bodies can be either zinc-plated carbon steel or stainless steel. For application in marine environment, both the anchor body and expansion wedge shall be stainless steel.
4. Install anchors as shown on the plans and in accordance with the anchor manufacturer's published installation instructions. Arrange a field demonstration test to evaluate the procedures and tools. The test shall be witnessed and approved by the Engineer prior to furnishing anchors on the structure.
5. Prior to hole drilling, use rebar locator to ensure clearing of existing deck strands or reinforcement. Install anchors to ensure a minimum effective embedment depth, (h_{ef}), as shown. Increase (h_{ef}) as needed to ensure sufficient thread length for proper torqueing and tightening of anchors.
6. Use anchors of minimum 1600 Lbs tensile capacity (minimum of steel, concrete breakout, and concrete pullout strengths as determined by ACI 318 Appendix D) at the required minimum embedment depth (h_{ef}). No lateral loads shall be introduced after conduit installation.

Texas Department of Transportation

Traffic Operations Division Standard

ELECTRICAL DETAILS CONDUIT SUPPORTS

ED(2)-14

FILE: ed2-14.dgn	DN: TxDOT	CK: TxDOT	DW: TxDOT	CK: TxDOT
© TxDOT October 2014	CONT	SECT	JOB	HIGHWAY
REVISIONS	-	-	-	RM 1431
	DIST	COUNTY		SHEET NO.
	AUS	TRAVIS		254

DATE:
FILE:

71B

DISCLAIMER:
The use of this standard is governed by the "Texas Engineering Practice Act". No warranty of any kind is made by TxDOT for any purpose whatsoever. TxDOT assumes no responsibility for the conversion of this standard to other formats or for incorrect results or damages resulting from its use.

ELECTRICAL CONDUCTORS

A. MATERIAL INFORMATION

1. Provide Type XHHW insulated conductors in accordance with Departmental Material Specification (DMS)11040 "Conductors" and Item 620 "Electrical Conductors." Provide conductors as listed on the Material Producers List (MPL) on the Department web site under "Roadway Illumination and Electrical Supplies" Item 620. Color code insulated conductors in conformance with the NEC. Identify grounded (neutral) conductors with white insulation. Identify grounding conductors (ground wires) with green insulation or bare conductors. Identify ungrounded (hot) conductors with any color insulation except green, white, or gray. Keep color scheme consistent throughout the wiring system. Identify conductors 6 American Wire Gauge (AWG) and smaller by continuous color jacket. Identify electrical conductors 4 AWG and larger by continuous color jacket or by colored tape. When identifying conductors with colored tape, mark at least 6 in. of the conductor's insulation with half laps of tape.

2. Provide a solid copper 6 AWG grounding electrode conductor to bond the electrical service equipment to the concrete encased grounding electrode or the ground rod at the service location. Connect the grounding electrode conductor to the ground rod with a UL listed connector in accordance with DMS 11040. Connect the grounding electrode conductor to the concrete encased grounding electrode as shown in the plans.

3. Where two or more circuits are present in one conduit or enclosure, permanently identify the conductors of each branch circuit by attaching a non-metallic tag around both circuit conductors at each accessible location. Provide tags with two straps, large enough to indicate circuit number, letter, or other identification as shown in the plans. Print circuit identification on the tag with a permanent marker.

4. Use listed compression or screw type pressure connectors, terminal blocks, or split bolt connectors for splicing as specified in DMS 11040. Use hot melt adhesive tape to fill the gap and seal the ends of heat shrink tubing. Provide UL listed gel-filled insulating splice covers. Splicing materials, insulating materials, breakaway disconnects, splice covers, and fuse holders are subsidiary to various bid items.

B. CONSTRUCTION METHODS

1. Use only a flat, high tensile strength polyester fiber pull tape for pulling conductors through the conduit system. After installing conductors in conduit, perform conductor pull test. If a conductor cannot be freely pulled, make any needed alterations or repairs at no additional cost to the department. Perform insulation resistance tests in accordance with Item 620. Coordinate with the Engineer to witness the tests.

2. Leave 2 ft. minimum, 3 ft. maximum length for each conductor up to the splice in ground boxes. Leave 3 ft. minimum, 4 ft. maximum length of conductor in ground boxes when pulled through with no splice. Leave 1 ft. minimum, 1.5 ft. maximum length of conductor at enclosures, weatherheads and pole bases.

3. Make splices only in junction boxes, ground boxes, pole bases, or electrical enclosures and use only listed compression or screw type pressure connectors, terminal blocks, or split bolt connectors. Insulate splices with heavy wall heat shrink tubing or gel-filled insulating splice covers to provide a watertight splice. Overlap conductor insulation with heat shrink tubing a minimum of 2 in. past both sides of the splice. Where heat shrink tubing may not shrink sufficiently to provide a watertight seal around the individual conductors, prior to heating the tubing, increase the diameter of the conductor insulation using hot melt adhesive tape to provide a watertight seal between the individual conductors and the heat shrink tubing. Ensure the tape extends past the heat shrink tubing. Use hot melt adhesive tape to fill the gap and seal the ends of heat shrink tubing. Heat shrink tubing that appears to have been burned, or overheated, is considered defective and must be replaced.

4. Size and install gel-filled insulating splice covers according to manufacturer's specifications when used in place of heat shrink tubing.

5. Wire nuts with factory applied waterproof sealant may be used for 8 AWG or smaller conductors in above ground junction boxes, but not in pole bases or ground boxes. Install wire nuts in an upright position to prevent the accumulation of water.

6. Support conductors in illumination poles with a J-hook at the top of the pole.

7. When terminating conductors, remove the insulation and jacketing material without nicking the individual strands of the conductor. Conductors with nicked individual conductor strands or removed strands will be considered damaged.

8. Replace conductors and cables that are damaged beyond repair or that fail an insulation resistance test at no additional cost to the department.

9. Do not repair damaged conductors with duct tape, electrical tape, or wire nuts. Use only approved splicing methods.

10. Do not terminate more than one conductor under a single connector, unless the connector is rated for multiple conductors. Do not exceed the pressure connector's listing for maximum number and size of conductors allowed.

11. Install breakaway connectors on conductors bid under Item 620 whenever those conductors pass through a breakaway support device. Follow manufacturer's instructions when terminating conductors to breakaway connectors. Properly torque threaded connections. Proper terminations are critical to the safe operation of breakaway devices. Trim waterproofing boots on breakaway connectors to fit snugly around the conductor to ensure waterproof connection. Only one conductor may enter a single opening in a boot. Provide waterproof boots with the correct number of openings. Leave unused openings factory sealed. Use prequalified breakaway connectors as shown on the MPL.

12. Provide and install a separate stranded equipment grounding conductor (EGC) in all conduits that contain circuit wiring of 50 volts or more. Unless shown elsewhere, size the EGC to be the same size as the largest current carrying conductor contained in the conduit. Ensure all EGCs are bonded together at every accessible location. For traffic signal installations, provide a minimum size 8 AWG EGC. The EGC is paid for under Item 620.

C. TEMPORARY WIRING

1. Install temporary conductors and electrical equipment in accordance with the NEC article "Temporary Installations" and Department standard sheets.

2. Provide a ground fault circuit interrupter (GFCI) for power outlets for portable electrical equipment, power tools, ice machines, ice storage bins and refrigerators located outdoors at grade. GFCI may be any one of the following: molded cord and plug set, receptacle, or circuit breaker type.

3. Use listed wire nuts with factory applied sealant for temporary wiring where approved.

4. Enclose conductor splices within a listed enclosure or ground box, or ensure the splices are more than 10 ft. above grade vertically and more than 5 ft. horizontally from any metal structure. Where installing temporary conductors in areas subject to vehicle traffic or mobile construction equipment, ensure the vertical clearance to ground is at least 18 ft. when measured at the lowest point. Ground messenger wires that support power conductors in conformance with the NEC.

5. Protect and when necessary repair any existing electrical conduits uncovered during the construction process in a timely manner and in conformance with the NEC.

GROUND RODS & GROUNDING ELECTRODES

A. MATERIAL INFORMATION

1. Provide and install a grounding electrode at electrical services. Provide ground rods according to DMS 11040 and the plans. Larger diameter or longer length rods may be called for in some specific locations, see the individual plans sheets. Concrete encased grounding electrodes may be called for in specific locations including electrical service, see individual plan sheets.

B. CONSTRUCTION METHODS

1. Furnish auxiliary ground rods for lightning protection and install in soil, concrete, or both, as called for in the plans. For ground rods installed in concrete, ensure the connection of the conductor to the ground rod is readily accessible for inspection or repairs. For ground rods installed in soil, ensure that the upper end is between 2 to 4 in. below finished grade.

2. Do not place ground rods in the same drilled hole as a timber pole.

3. Install ground rods so the imprinted part number is at the upper end of the rod.

4. Remove all non-conductive coatings such as concrete splatter from the rod at the clamp location.

5. Route all conductors as short and straight as possible for connection to lightning protection ground rods. When a bend is required, ensure a minimum radius bend of four inches for these conductors.

6. Unless otherwise called for in the plans, protect grounding electrode conductors with non-metallic conduit. When protecting grounding electrode conductors with metal conduit, provide and install a grounding type bushing and properly sized bonding jumper on each end of the metal conduit.

7. Written authorization is required before installing a ground rod in a horizontal trench for rocky soil or a solid rock bottom.

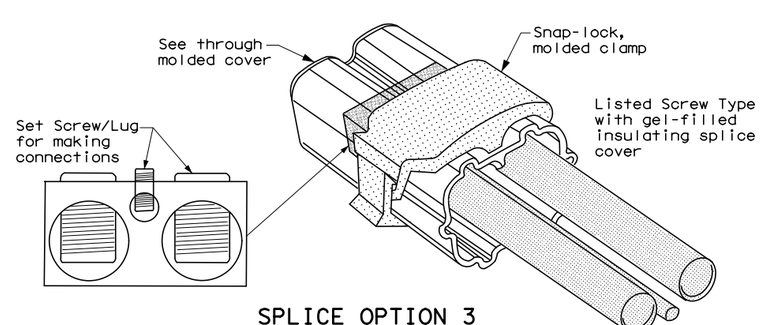

SPLICE OPTION 3
Listed Screw Type

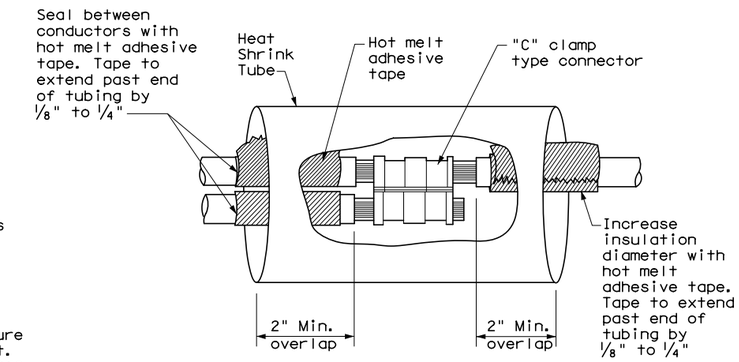

SPLICE OPTION 1
Compression Type

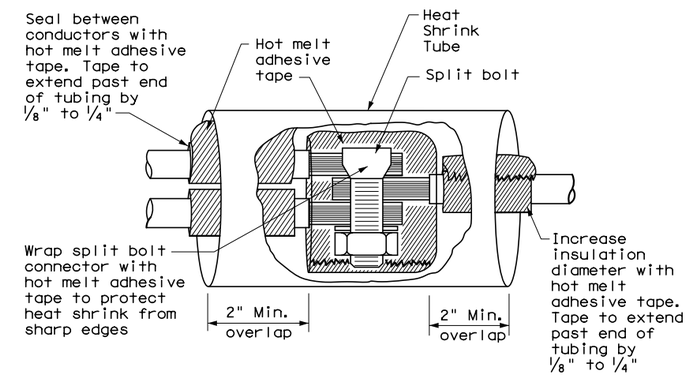

SPLICE OPTION 2
Split Bolt Type

Texas Department of Transportation | Traffic Operations Division Standard

ELECTRICAL DETAILS CONDUCTORS

ED(3)-14

FILE: ed3-14.dgn	DN: TxDOT	CK: TxDOT	DW: TxDOT	CK: TxDOT			
© TxDOT October 2014	CONT	SECT	JOB	HIGHWAY			
REVISIONS	-	-	-	RM 1431			
	DIST	COUNTY		SHEET NO.			
	AUS	TRAVIS		255			

71C

DATE:
FILE:

DISCLAIMER:
The use of this standard is governed by the "Texas Engineering Practice Act". No warranty of any kind is made by TxDOT for any purpose whatsoever. TxDOT assumes no responsibility for the conversion of this standard to other formats or for incorrect results or damages resulting from its use.

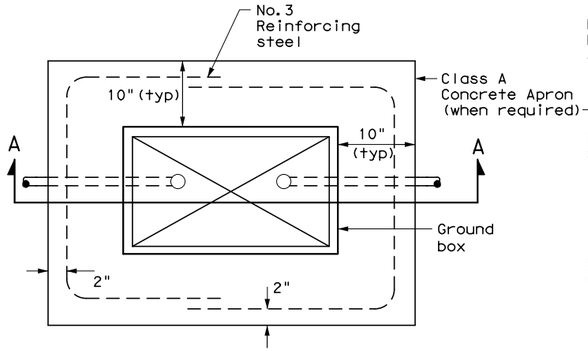

PLAN VIEW

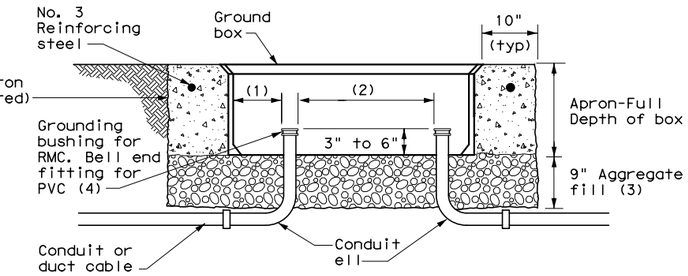

SECTION A - A

APRON FOR GROUND BOX

(1) Uniformly space ends of conduits within the ground box. Position ends of conduits so that ground box walls do not interfere with the installation of grounding bushings or bell end fittings.

(2) Maintain sufficient space between conduits to allow for proper installation of bushing.

(3) Place aggregate under the box, not in the box. Aggregate should not encroach on the interior volume of the box.

(4) Install a grounding bushing on the upper end of all RMC terminating in a ground box. Ground RMC elbows when any part of the elbow is less than 18 in. below the bottom of the ground box. Install a PVC bushing or bell end fitting on the upper end of all PVC conduits terminating in a ground box.

GROUND BOXES

A. MATERIALS

1. Provide polymer concrete ground boxes measuring 16x30x24 in. (WxLxD) or smaller in accordance with Departmental Material Specification (DMS) 11070 "Ground Boxes" and Item 624 "Ground Boxes."

2. Provide Type A, B, C, D, and E ground boxes as shown in the plans, and as listed on the Material Producers List (MPL) on the Department web site under "Roadway Illumination and Electrical Supplies," Item 624.

3. Ensure ground box cover is correctly labeled in accordance with DMS 11070.

4. Provide larger ground boxes in accordance with Item 624 and as shown in the plans.

B. CONSTRUCTION METHODS

1. Remove all gravel and dirt from conduit. Cap all conduits prior to placing aggregate and setting ground box. Provide Grade 3 or 4 coarse aggregate as shown on Table 2 of Item 302 "Aggregates for Surface Treatments." Ensure aggregate bed is in place and at least 9 inches deep, prior to setting the ground box. Install ground box on top of aggregate.

2. Cast ground box aprons in place. Reinforcing steel may be field bent. Ensure the depth of concrete for the apron extends from finished grade to the top of the aggregate bed under the box. Ground box aprons, including concrete and reinforcing steel, are subsidiary to ground boxes when called for by descriptive code.

3. Keep bolt holes in the box clear of dirt. Bolt covers down when not working in ground boxes.

4. Install all conduits and ells in a neat and workmanlike manner. Uniformly space conduits so grounding bushings and bell end fittings can easily be installed.

5. Temporarily seal all conduits in the ground box until conductors are installed.

6. Permanently seal conduits immediately after the completion of conductor installation and pull tests. Permanently seal the ends of all conduits with duct seal, expandable foam, or other method as approved. Do not use duct tape as a permanent conduit sealant. Do not use silicone caulk as a sealant.

7. When a ground rod is present in a ground box, bond all equipment grounding conductors together and to the ground rod with listed connectors.

8. When a type B or D ground box is stacked to meet volume requirements, it is allowable to cut an appropriately sized hole for conduit entry in the side wall at least 18 inches below grade.

9. If an existing ground box in the contract has a metal cover, bond the cover to the equipment grounding conductor with a 3 ft. long stranded bonding jumper the same size as the grounding conductor. The bonding jumper is subsidiary to various bid items. Verify existing ground boxes with metal covers are shown on the plans, with notes fully describing the work required.

10. If other ground boxes with metal covers are within the project limits but are not part of the contract, the Engineer may direct the Contractor to bond the metal covers, identifying the specific boxes in writing. This work will be paid for separately.

11. Bond metal ground box covers to the grounding conductor with a tank ground type lug.

GROUND BOX DIMENSIONS

TYPE	OUTSIDE DIMENSIONS (INCHES) (Width x Length X Depth)
A	12 X 23 X 11
B	12 X 23 X 22
C	16 X 29 X 11
D	16 X 29 X 22
E	12 X 23 X 17

GROUND BOX COVER DIMENSIONS

TYPE	DIMENSIONS (INCHES)							
	H	I	J	K	L	M	N	P
A, B & E	23 1/4	23	13 3/4	13 1/2	9 7/8	5 1/8	1 3/8	2
C & D	30 1/2	30 1/4	17 1/2	17 1/4	13 1/4	6 3/4	1 3/8	2

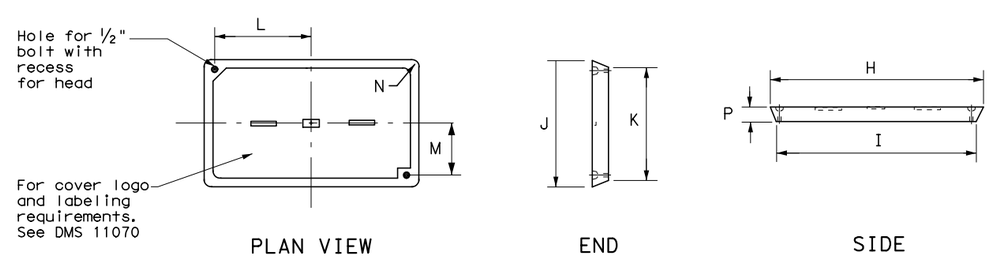

PLAN VIEW END SIDE

GROUND BOX COVER

Texas Department of Transportation

Traffic Operations Division Standard

ELECTRICAL DETAILS GROUND BOXES

ED(4)-14

FILE: ed4-14.dgn	DN: TxDOT	CK: TxDOT	DW: TxDOT	CK: TxDOT
© TxDOT October 2014	CONT	SECT	JOB	HIGHWAY
REVISIONS	-	-	-	RM 1431
	DIST		COUNTY	SHEET NO.
	AUS		TRAVIS	256

71D

DATE:
FILE:

DISCLAIMER:
The use of this standard is governed by the "Texas Engineering Practice Act". No warranty of any kind is made by TxDOT for any purpose whatsoever. TxDOT assumes no responsibility for the conversion of this standard to other formats or for incorrect results or damages resulting from its use.

ELECTRICAL SERVICES NOTES

1. Provide new materials. Ensure installation and materials comply with the applicable provisions of the National Electrical Code (NEC) and National Electrical Manufacturers Association (NEMA) standards. Ensure material is Underwriters Laboratories (UL) listed. Provide and install electrical service conduits, conductors, disconnects, contactors, circuit breaker panels, and branch circuit breakers as shown on the Electrical Service Data chart in the plans. Faulty fabrication or poor workmanship in material, equipment, or installation is justification for rejection. Where manufacturers provide warranties and guarantees as a customary trade practice, furnish these to the State.

2. Provide electrical services in accordance with Electrical Details standard sheets, Departmental Material Specification (DMS) 11080 "Electrical Services,"DMS 11081 "Electrical Services-Type A," DMS 11082 "Electrical Services-Type C," DMS 11083 "Electrical Services-Type D," DMS 11084 "Electrical Services-Type T," DMS 11085 "Electrical Services-Pedestal (PS)", and Item 628 "Electrical Services" of the Standard Specifications. Provide electrical service types A, C, and D, as listed on the Material Producers List (MPL) on the Department web site under "Roadway Illumination and Electrical Supplies," Item 628. Provide other service types as detailed on the plans.

3. Provide all work, materials, services, and any incidentals needed to install a complete electrical service as specified in the plans.

4. Coordinate with the Engineer and the utility provider for metering and compliance with utility requirements. Primary line extensions, connection charges, meter charges, and other charges by the utility company to provide power to the location are paid for in accordance with Item 628. Get approval for the costs associated with these charges prior to engaging the utility company to do the work. Consult with the utility provider to determine costs and requirements, and coordinate the work as approved.

5. The enclosure manufacturer will provide Master Lock Type 2 with brass tumblers keyed #2195 for all custom electrical enclosures. Installing Contractor is to provide Master Lock #2195 Type 2 with brass tumblers for "off the shelf" enclosures. Master Lock #2195 keys and locks become property of the State. Unless otherwise approved, do not energize electrical service equipment until locks are installed.

6. Enclosures with external disconnects that de-energize all equipment inside the enclosure do not need a dead front trim. Protect incoming line terminations from incidental contact as required by the NEC.

7. When galvanized is specified for nuts, screws, bolts or miscellaneous hardware, stainless steel may be used.

8. Provide wiring and electrical components rated for 75°C. Provide red, black, and white colored XHHW service entrance conductors of minimum size 6 American Wire Gauge (AWG). Identify size 6 AWG conductors by continuous color jacket. Identify electrical conductors sized 4 AWG and larger by continuous color jacket or by colored tape. Mark at least 6 inches of the conductor's insulation with half laps of colored tape, when identifying conductors. Ensure each service entrance conductor exits through a separately bushed non-metallic opening in the weatherhead. The lengths of the conductors outside the weatherhead are to be 12 inches minimum, 18 inches maximum, or as required by utility.

9. All electrical service conduit and conductors attached to the electrical service including the riser or the elbow below ground are subsidiary to the electrical service. For an underground utility feed, all service conduit and conductors after the elbow, including service conduit and conductors for the utility pole riser when furnished by the Contractor, will be paid for separately.

10. Provide rigid metal conduit (RMC) for all conduits on service, except for the ½ in. PVC conduit containing the electrical service grounding electrode conductor. Size the service entrance conduit as shown in the plans. Ensure conduit for branch circuit entry to enclosure is the same size as that shown on the layout sheets for branch circuit conduit. Extend all rigid metal conduits a minimum of 6 inches underground and then couple to the type and schedule of the conduit shown on the layout for that particular branch circuit. Install a grounding bushing on the RMC where it terminates in the service enclosure.

11. Use of liquidtight flexible metal conduit (LFMC) is allowed between the meter and service enclosure when they are mounted 90 to 180 degrees to each other. Size the LFMC the same size as service entrance conduit. LFMC must not exceed 3 feet in length. Strap LFMC within 1 foot of each end. LFMC less than 12 inches in length need not be strapped. Each end of LFMC must have a grounding bushing or be terminated with a grounding fitting. The LFMC must contain a grounded (neutral) conductor. Ensure any bend in LFMC never exceeds 180 degrees. A pull test is required on all installed conductors, with at least six inches of free conductor movement demonstrated to the satisfaction of the Engineer.

12. Ensure all mounting hardware and installation details of services conform to utility company specifications.

13. For all electrical service enclosures listed under Item 628 on the MPL, the UL 508 enclosure manufacturers will prepare and submit a schematic drawing unique to each service. Before shipment to the job site, place the applicable laminated schematic drawings and the laminated plan sheet showing the electrical service data chart used to build the enclosure in the enclosure's data pocket. The installing contractor will copy and laminate the actual project plan sheets detailing all equipment and branch circuits supplied by that service. The laminated plan sheets are to be placed in the service enclosure's document pocket. Reduce 11 in. x 17 in. plan sheets to 8 ½ in. x 11 in. before laminating. If the installation differs from the plan sheets, the installing contractor is to redline plan sheets before laminating.

14. When providing an "Off The Shelf" Type D or Type T service, provide laminated plan sheets detailing equipment and branch circuits supplied by that service. Reduce 11 in. x 17 in. plan sheets to 8 ½ in. x 11 in before laminating. Deliver these drawings before completion of the work to the Engineer, instead of placing in enclosure that has no door pocket.

15. Do not install conduit in the back wall of a service enclosure where it would penetrate the equipment mounting panel inside the enclosure. Provide grounding bushings on all metal conduits, and terminate bonding jumpers to grounding bus. Grounding bushings are not required when the end of the metal conduit is fitted with a conduit sealing hub or threaded boss, such as a meter base hub.

SERVICE ASSEMBLY ENCLOSURE

1. Provide threaded hub for all conduit entries into the top of enclosure.

2. Type galvanized steel (GS) enclosures may be used for Type C panelboards and for Type D and T services that do not use an enclosure mounted photocell or lighting contactor. Provide GS enclosures in accordance with DMS 11080, 11082, 11083, and 11084.

3. Provide aluminum (AL) and stainless steel (SS) enclosures for Types A, C, and D in accordance with DMS 11080, 11081, 11082, 11083, and 11084. Do not paint stainless steel.

4. Provide pedestal service (PS) enclosures in accordance with ED(9) and DMS 11080 and 11085. Do not provide GS pedestal services. If GS is shown in the PS descriptive code, provide an AL enclosure.

MAIN DISCONNECT & BRANCH CIRCUIT BREAKERS

1. Field drill flange-mounted remote operator handle if needed, to ensure handle is lockable in both the "On" and "Off" positions.

2. When the utility company provides a transformer larger than 50 KVA, verify that the available fault current is less than the circuit breaker's ampere interrupting capacity (AIC) rating and provide documentation from the electric utility provider to the Engineer.

PHOTOELECTRIC CONTROL

1. Provide photocell as listed on the MPL. Move, adjust, or shield the photocell from stray or ambient night time light to ensure proper operation. Mount photocell facing north when practical. Mount top of pole photocells as shown on Top Mounted Photocell Detail.

* ELECTRICAL SERVICE DATA

Elec. Service ID	Plan Sheet Number	Electrical Service Description	Service Conduit **Size	Service Conductors No./Size	Safety Switch Amps	Main Ckt. Bkr. Pole/Amps	Two-Pole Contractor Amps	Panelbd/ Loadcenter Amp Rating	Branch Circuit ID	Branch Ckt. Bkr. Pole/Amps	Branch Circuit Amps	KVA Load
SB 183	289	ELC SRV TY A 240/480 100(SS)AL(E)SF(U)	2"	3/#2	100	2P/100	100	N/A	Lighting NB	2P/40	26	28.1
									Lighting SB	2P/40	25	
									Underpass	1P/20	15	
NB Access	30	ELC SRV TY D 120/240 060(NS)SS(E)TS(O)	1 ¼"	3/#6	N/A	2P/60		100	Sig. Controller	1P/30	23	5.3
							30		Luminaires	2P/20	9	
									CCTV	1P/20	3	
2nd & Main	58	ELC SRV TY T 120/240 000(NS)GS(N)SP(O)	1 ¼"	3/#6	N/A	N/A	N/A	70	Flashing Beacon 1	1P/20	4	1.0
									Flashing Beacon 2	1P/20	4	

* Example only, not for construction. All new electrical services must have electrical service data chart specific to that service as shown in the plans.

** Verify service conduit size with utility. Size may change due to utility meter requirements. Ensure conduit size meets the National ELectrical Code.

EXPLANATION OF ELECTRICAL SERVICE DESCRIPTIVE CODE

ELEC SERV TY X XXX/XXX XXX (XX) XX (X) XX (X)

Schematic Type

Service Voltage V / V

Disconnect Amp Rating
000 indicates main lug only/
Typically Type T

(SS)= Safety Switch Ahead of Meter-Check with Utility
(NS)= No safety Switch Ahead of Meter-Check with Utility

Enclosure Type
GS= Galvanized steel("off the shelf")
SS= Stainless steel(Custom Enclosure)See MPL
AL= Aluminum (Custom Enclosure)See MPL

Photocell Mounting Location
(E)= Inside Service/Enclosure Mounted
(T)= Top of pole
(L)= Luminaire mounted
(N)= None/No Photocell or Lighting Contactor Required

Service Support Type
GC= Granite concrete
OC= Other concrete
TP= Timber pole
SP= Steel pole
SF= Steel frame
OT= Pole by others or paid for separately
EX= Existing pole
TS= Service on traffic signal pole
PS= Pedestal Service

O= Overhead Service Feed from Utility
U= Underground Service Feed from Utility

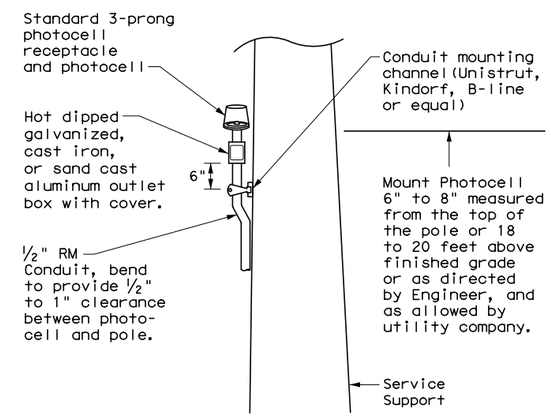

TOP MOUNTED PHOTOCELL

Install conduit strap maximum 3 feet from box. 5 foot maximum spacing between straps supporting conduit.

Texas Department of Transportation — Traffic Operations Division Standard

ELECTRICAL DETAILS SERVICE NOTES & DATA

ED(5)-14

FILE: ed5-14.dgn	DN: TxDOT	CK: TxDOT	DW: TxDOT	CK: TxDOT
© TxDOT October 2014	CONT	SECT	JOB	HIGHWAY
REVISIONS	-	-	-	RM 1431
	DIST		COUNTY	SHEET NO.
	AUS		TRAVIS	257

71E

DATE:
FILE:

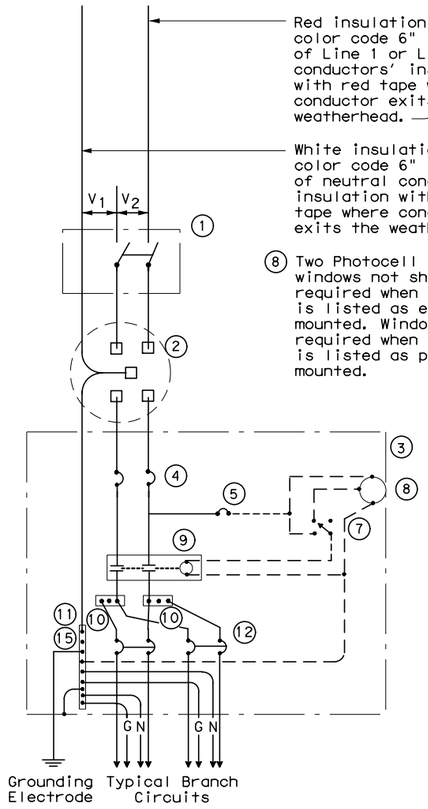

SCHEMATIC TYPE A
THREE WIRE

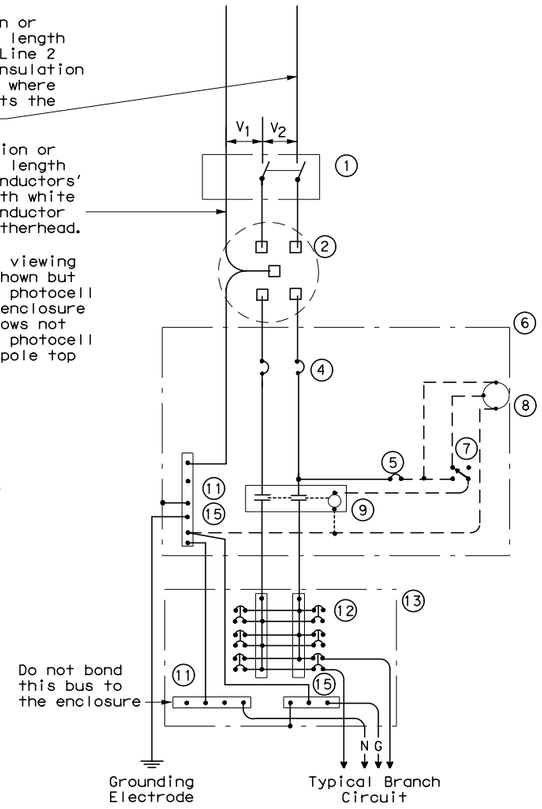

SCHEMATIC TYPE C
THREE WIRE

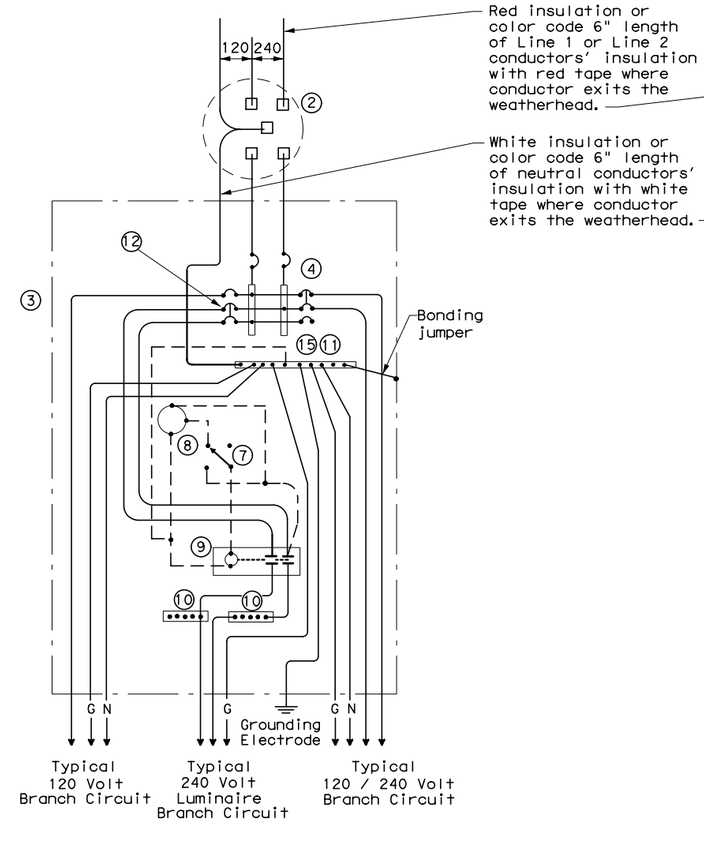

SCHEMATIC TYPE D - CUSTOM
120/240 VOLTS - THREE WIRE

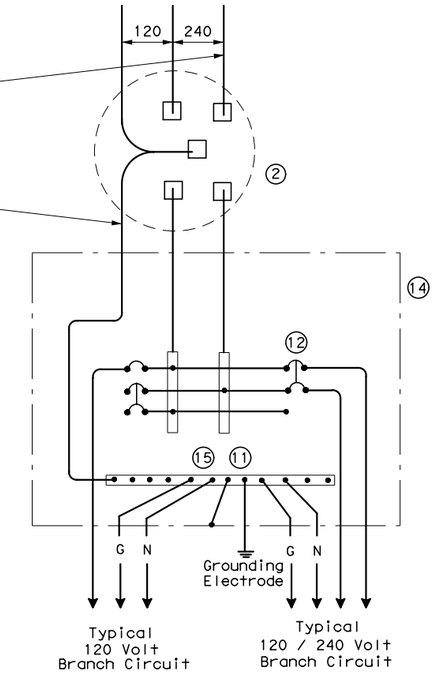

SCHEMATIC TYPE T
120/240 VOLTS - THREE WIRE

Galvanized steel-"Buy Off The Shelf" only. When required install photocell top of the pole or on luminaire only, no lighting contractor will be installed.

WIRING LEGEND	
———	Power Wiring
- - - -	Control Wiring
—N—	Neutral Conductor
—G—	Equipment grounding conductor-always required

SCHEMATIC LEGEND	
1	Safety Switch (when required)
2	Meter (when required-verify with electric utility provider)
3	Service Assembly Enclosure
4	Main Disconnect Breaker (See Electrical Service Data)
5	Circuit Breaker, 15 Amp (Control Circuit)
6	Auxiliary Enclosure
7	Control Station ("H-O-A" Switch)
8	Photo Electric Control (enclosure-mounted shown)
9	Lighting Contactor
10	Power Distribution Terminal Blocks
11	Neutral Bus
12	Branch Circuit Breaker (See Electrical Service Data)
13	Separate Circuit Breaker Panelboard
14	Load Center
15	Ground Bus

DISCLAIMER:
The use of this standard is governed by the "Texas Engineering Practice Act". No warranty of any kind is made by TxDOT for any purpose whatsoever. TxDOT assumes no responsibility for the conversion of this standard to other formats or for incorrect results or damages resulting from its use.

DATE:
FILE:

Texas Department of Transportation

Traffic Operations Division Standard

ELECTRICAL DETAILS SERVICE ENCLOSURE AND NOTES

ED(6)-14

FILE: ed6-14.dgn	DN: TxDOT	CK: TxDOT	DW: TxDOT	CK: TxDOT
© TxDOT October 2014	CONT	SECT	JOB	HIGHWAY
REVISIONS	-	-	-	RM 1431
	DIST	COUNTY		SHEET NO.
	AUS	TRAVIS		258

71F

SUPPORT TYPE STEEL POLE (SP) AND STEEL FRAME (SF)

1. Provide steel pole and steel frame supports as per TxDOT Departmental Material Specification (DMS)11080 "Electrical Services." Mount all equipment and conduit on 12 gauge galvanized steel or stainless steel channel strut, 1 ½ in. or 1 ⅝ in. wide by 1 in. up to 3 ¾ in. deep Unistrut, Kindorf, B-line or equal. Bolt or weld all channel and hardware to vertical members as approved. Do not stack channel. File smooth and paint field cut ends of all channel with zinc-rich paint before installing.

2. Provide poles for overhead service with an eyebolt or similar fitting for attachment of the service drop to the pole in conformance with the electric utility provider's specifications.

3. Provide and install galvanized ¾ in. x 18 in. x 4 in. (dia. x length x hook length) anchor bolts for underground service supports. Provide and install galvanized ¾ in. x 56 in. x 4 in. anchor bolts for overhead service supports. Ensure anchor bolts have 3 in of thread, with 3 ¼ in. to 3 ½ in. of the exposed anchor bolt projecting above finished foundation. Provide and install leveling nuts for all anchor bolts.

4. Bond one of the anchor bolts to the rebar cage with 6 AWG bare stranded copper conductor. Use listed mechanical connectors rated for embedment in concrete. See Inset B.

5. Furnish and install rigid metallic ells in all steel pole and steel frame foundations for all conduits entering the service from underground.

6. Use class C concrete for foundations. Ensure reinforcing steel is Grade 60 with 3" of unobstructed concrete cover.

7. Drill and tap steel poles and frames for ½ in. X 13 UNC tank ground fitting. For steel pole service supports, provide and install tank ground fitting 4 in. to 6 in. below electrical service enclosure. Provide properly sized hole through the bottom of the enclosure for the service grounding electrode conductor. Ensure electrical service grounding electrode conductor is as short and straight as possible from the enclosure to the tank ground fitting. For steel frame service supports, provide and install tank ground fitting on steel frame post. Install service grounding electrode conductor in a non-metallic conduit or tubing from the enclosure to the steel frame post. Connect electrical service grounding electrode conductor to the tank ground fitting. See steel frame and steel pole details and Inset A for more information. Size service entrance conduit and branch circuit conduit as shown in the plans. For underground conduit runs from the electrical service, extend RMC from the service enclosure to an RMC elbow, and then connect the schedule type and size of conduit shown in the plans. Provide and install grounding bushings where RMC terminates in the enclosure. Grounding bushings are not required when RMC is fitted into a sealing hub or threaded boss.

8. If Steel pole or frame is painted, bond each separate painted piece with a bonding jumper attached to a tapped hole.

9. Provide ¼" - 20 machine screws for bonding. Do not use sheet metal screws. Remove all non-conductive material at contact points. Terminate bonding jumpers with listed devices. Install minimum size 6 AWG stranded copper bonding jumpers. Make up all threaded bonding connections wrench tight.

10. Avoid contact of the service drop and service entrance conductors with the metal pole to prevent abrasion of the insulated conductors.

11. Shop drawings are not required for service support structure unless specifically stated elsewhere or directed by the Engineer.

DISCLAIMER:
The use of this standard is governed by the "Texas Engineering Practice Act". No warranty of any kind is made by TxDOT for any purpose whatsoever. TxDOT assumes no responsibility for the conversion of this standard to other formats or for incorrect results or damages resulting from its use.

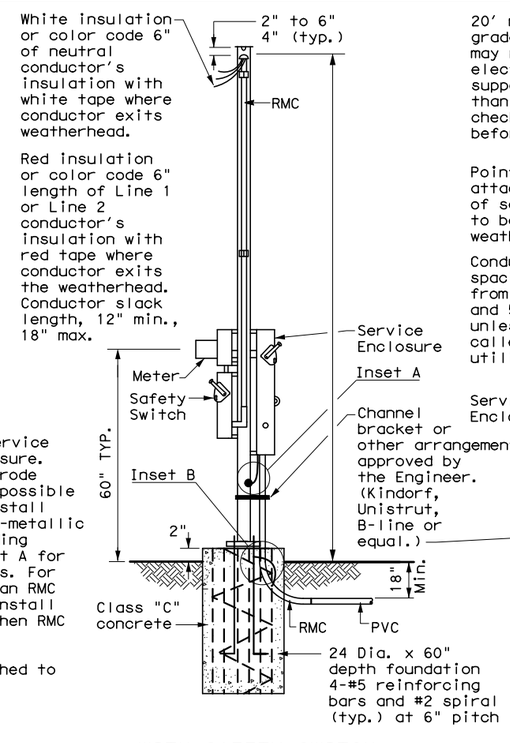

WITH SAFETY SWITCH

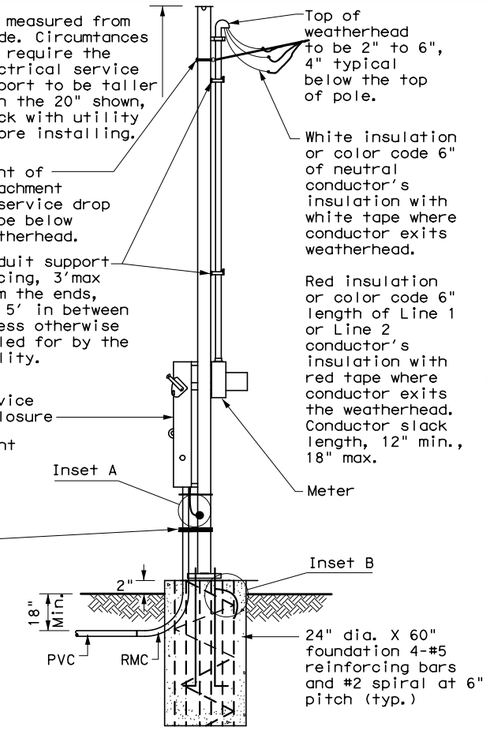

WITHOUT SAFETY SWITCH

SERVICE SUPPORT TYPE SP (O) - OVERHEAD SERVICE

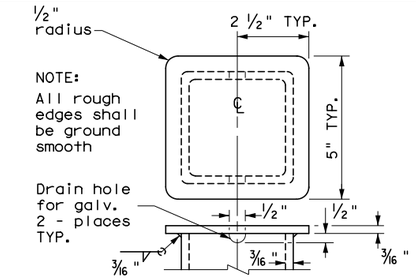

POLE TOP PLATE

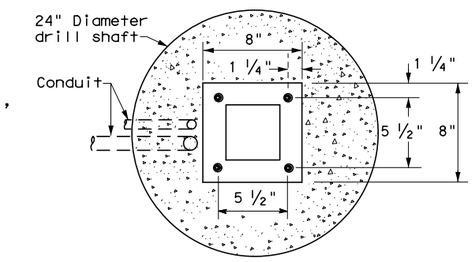

BASE PLATE DETAIL

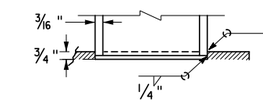

BOTTOM OF POLE

SERVICE SUPPORT TYPE SF & SP

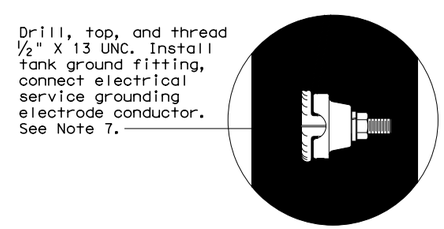

FRONT VIEW

INSET A

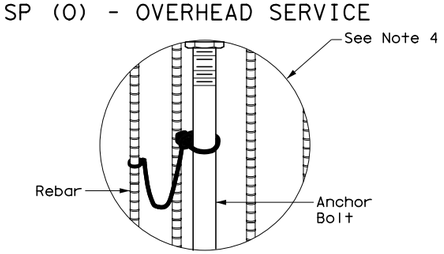

INSET B

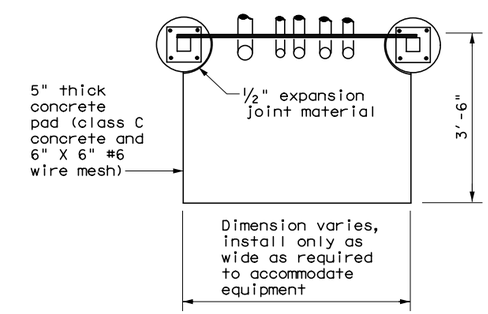

TOP VIEW

SERVICE SUPPORT TY SF (O) & SF (U)

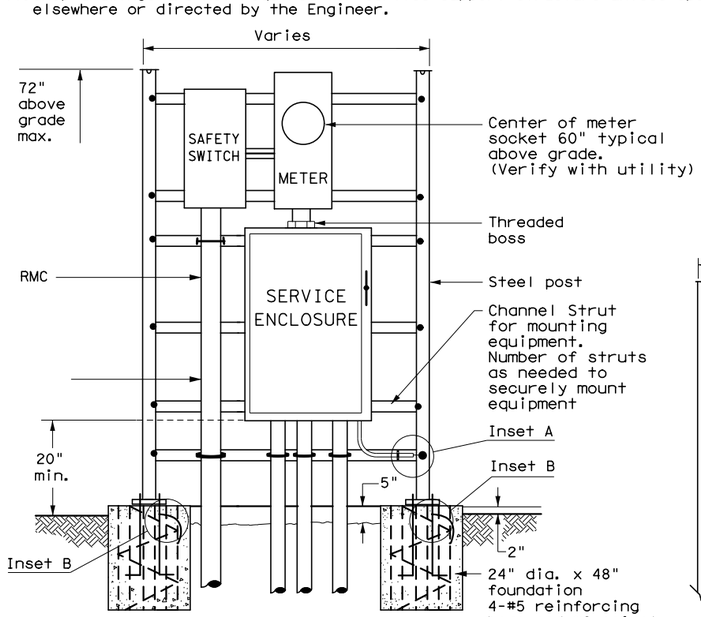

WITH SAFETY SWITCH

FRONT VIEW

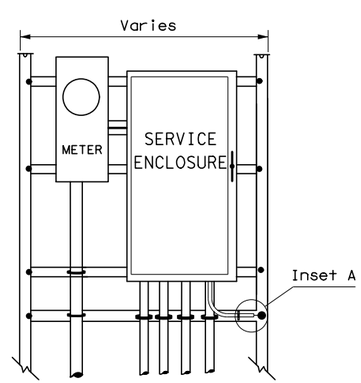

WITHOUT SAFETY SWITCH

SERVICE SUPPORT TYPE SF(U) - UNDERGROUND SERVICE

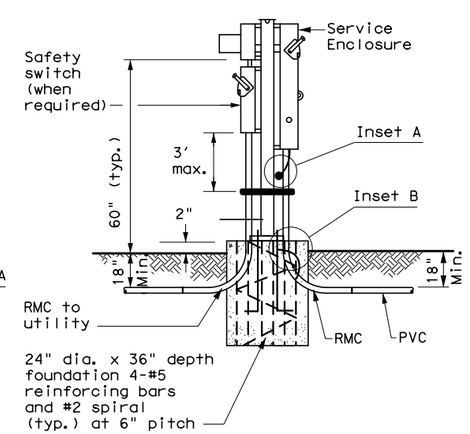

WITH SAFETY SWITCH

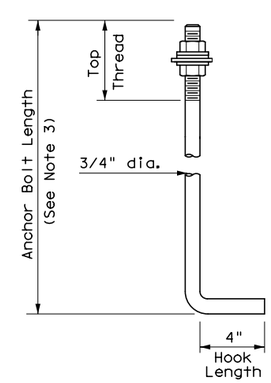

HOOKED ANCHOR DETAIL

SERVICE SUPPORT TYPE SP(U) - UNDERGROUND SERVICE

Texas Department of Transportation

Traffic Operations Division Standard

ELECTRICAL DETAILS SERVICE SUPPORT TYPES SF & SP

ED(7)-14

FILE: ed7-14.dgn	DN: TxDOT	CK: TxDOT	DW: TxDOT	CK: TxDOT
© TxDOT October 2014	CONT	SECT	JOB	HIGHWAY
REVISIONS	-	-	-	RM 1431
	DIST		COUNTY	SHEET NO.
	AUS		TRAVIS	259

DATE:
FILE:

71G

TRAFFIC SIGNAL NOTES

1. Do not pass luminaire conductors through the signal controller cabinet.
2. Include an equipment grounding conductor in all conduits throughout the electrical system. Bond all exposed metal parts to the grounding conductor.
3. Provide roadway luminaires, when required, in accordance with the material and construction sections of Item 610, "Roadway Illumination Assemblies," except for performance testing of luminaires. Test installed roadway luminaires for proper operation as a part of the associated traffic signal system test.
4. If internally illuminated street name signs are approved for use, ground the fixture to the pole with a 12 AWG green XHHW conductor.
5. Bond anchor bolts to rebar cage in two locations using #3 bars or 6 AWG stranded copper conductors. Use listed mechanical connectors rated for embedment in concrete. See TXDOT standard TS-FD for further details.
6. Drill and tap signal poles for ½ in. X 13 UNC tank ground fitting. Provide and install tank ground fitting 4 in. to 6 in. directly below electrical service enclosure. Provide properly sized hole through the bottom of the enclosure for the service grounding electrode conductor. Connect the electrical service grounding electrode conductor to the tank ground fitting. Ensure electrical service grounding electrode conductor is as short and straight as possible from the enclosure to the tank ground fitting. See Inset A detail for further information. Size service entrance conduit and branch circuit conduit as shown in the plans.
7. Mount electrical service enclosure and meter to signal pole with stainless steel bands. Ensure bands are a minimum width of ¾ in. Secure enclosures to bands using two-bolt brackets. Install brackets near top and bottom of each enclosure. Install properly sized stainless steel washers on each bolt in the enclosure. Band or drill and tap properly sized stand-off straps to signal pole for attaching conduit.
8. Conduct pull tests and insulation resistance tests on all illumination and power conductors as required in Item 620 "Electrical Conductors" and ED(3). To prevent electronics damage, do not conduct insulation resistance tests on traffic signal cables after termination.
9. Lock all enclosures and bolt down all ground box covers before applying power to the signal installation.
10. Terminate conduits entering the top of enclosures with a conduit-sealing hub or threaded boss such as meter hub. Install a grounding bushing on all metal conduits not connected to conduit-sealing hub or threaded boss. Bond the grounding bushing to the ground bus with a bonding jumper. Seal all conduits entering enclosures with duct seal or expanding foam. Do not use silicone to seal conduit ends.
11. For all conduits, ensure the burial depth is a minimum of 18". Ensure the minimum burial depth for conduit placed under a roadway is 24".

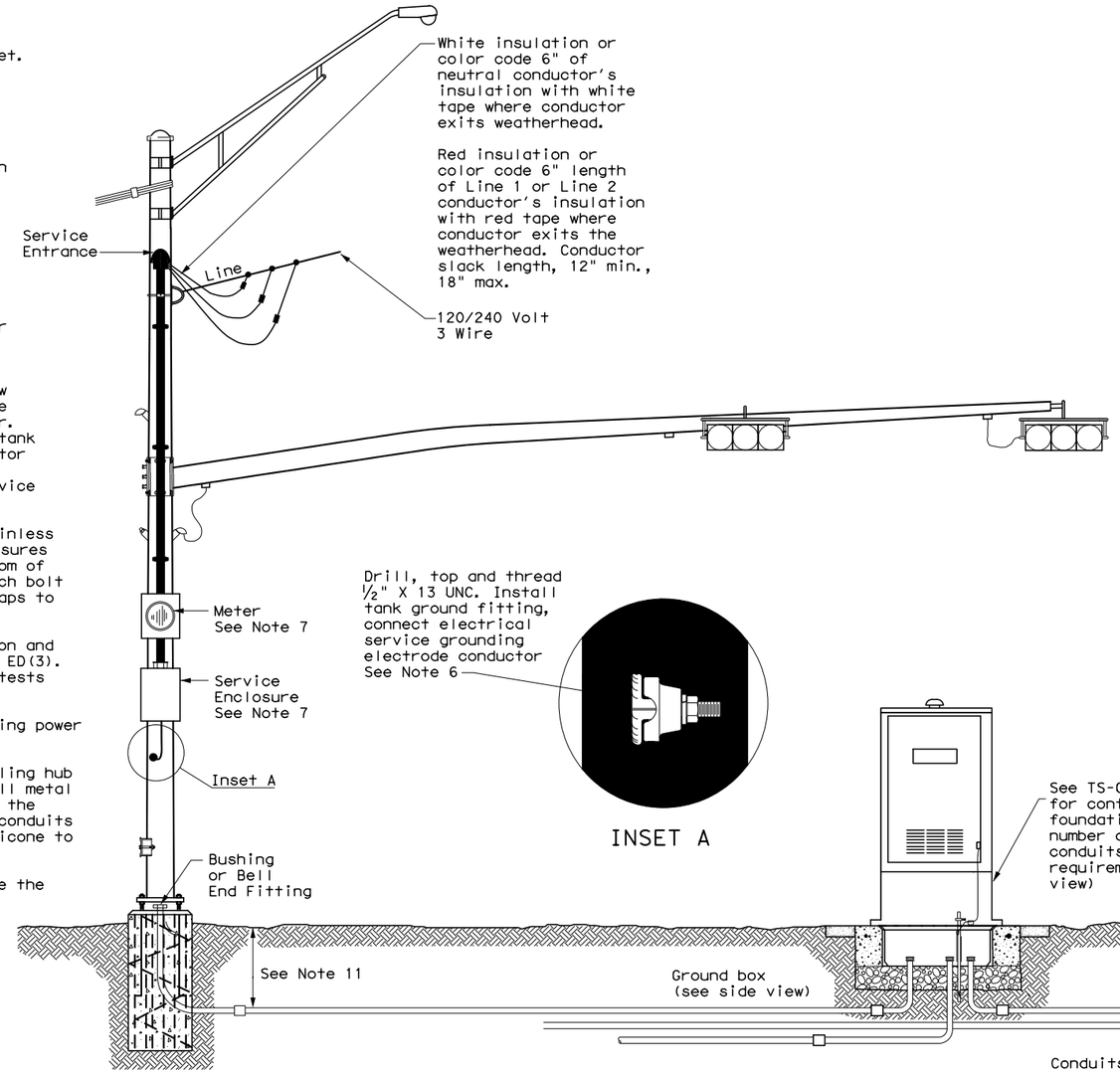

SIGNAL POLE WITH SERVICE

Type T electrical service mounted on signal pole shown as an example. See electrical details, layout sheets, and electrical service data chart for additional details.

INSET A

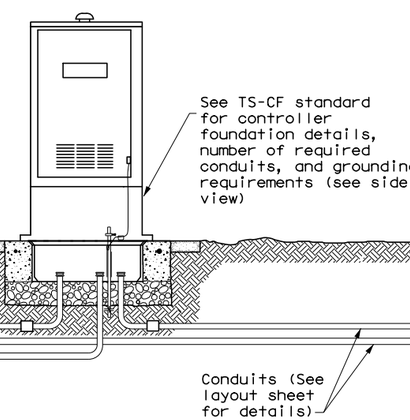

SIGNAL CONTROLLER FRONT VIEW

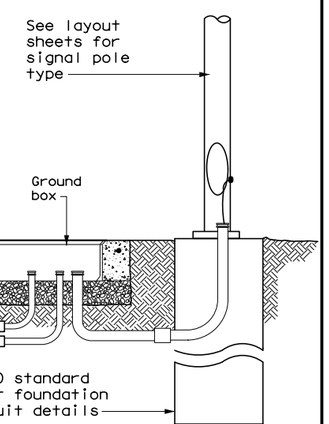

SIGNAL POLE

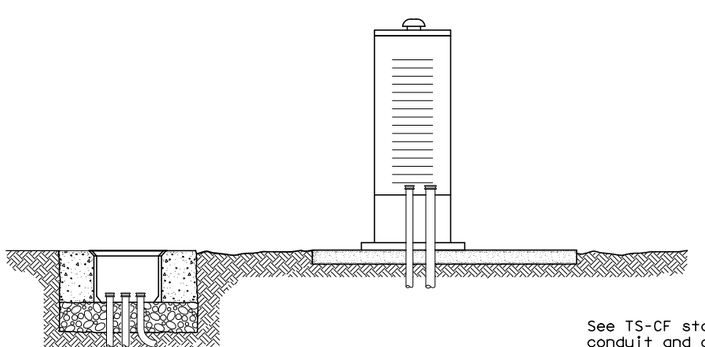

SIGNAL CONTROLLER SIDE VIEW

See TS-CF standard for conduit and grounding requirements. See layout sheets for ground box locations and any additional conduits that are required.

DISCLAIMER:
The use of this standard is governed by the "Texas Engineering Practice Act". No warranty of any kind is made by TxDOT for any purpose whatsoever. TxDOT assumes no responsibility for the conversion of this standard to other formats or for incorrect results or damages resulting from its use.

DATE:
FILE:

Texas Department of Transportation — Traffic Operations Division Standard

ELECTRICAL DETAILS TYPICAL TRAFFIC SIGNAL SYSTEM DETAILS

ED(8)-14

FILE: ed8-14.dgn	DN: TxDOT	CK: TxDOT	DW: TxDOT	CK: TxDOT
© TxDOT October 2014	CONT	SECT	JOB	HIGHWAY
REVISIONS	-	-	-	RM 1431
	DIST		COUNTY	SHEET NO.
	AUS		TRAVIS	260

71H

PEDESTAL SERVICE NOTES

1. Manufacture pedestal electrical services in accordance with Departmental Material Specifications (DMS)11080 "Electrical Services", 11085 "Electrical Services-Pedestal (PS)" and Item 628 "Electrical Services. "Provide pedestal electrical services as listed on the Material Producers list (MPL) on the Department's web site under "Roadway Illumination and Electrical Supplies," Item 628. Ensure all mounting hardware and installation details of services meet utility company specifications. Contact the local utility company for approval of pedestal details prior to installing the electrical pedestal service. Submit any changes required by the utility company prior to manufacturing the pedestal enclosure.

2. When a meter socket is required, provide a socket with a minimum 100 amp rating that complies with local utility requirements.

3. Provide Class A or C concrete for pedestal service foundations in accordance with Item 420, "Concrete Substructures," except that concrete will not be paid for directly but is considered subsidiary to Item 628.

4. Provide #4 reinforcing steel for foundations in accordance with Item 440, "Reinforcement for Concrete."

5. Install 1/2 in. X 2 1/16 in. minimum length concrete single expansion type anchors for mounting pedestal enclosure to foundation. Anchor location to match mounting holes in each corner of enclosure. Secure each of the four corners of the pedestal enclosure to the anchors in the foundation with a 1/2 in. galvanized or stainless steel machine thread bolt, a properly sized locknut and a flat washer.

6. Finish top of concrete foundation in a neat and workmanlike manner. If leveling washers are used, ensure no more than 1/8 in. gap at any corner. Do not exceed a maximum dip or rise in the foundation of 1/8 in. per foot. When properly installed, ensure the top of the service enclosure is level front to back and side to side within 1/4 in. Repair rocking or movement of the service enclosure at no additional cost to the department.

7. Do not use liquidtight flexible metal conduit (LFMC) on pedestal type services.

8. Ensure all elbows in the foundation are sized as per utility provider's conduit requirements for underground conduit and feeders. PVC extensions may be installed provided the ends of the rigid metal conduits are more than 2 in. below the top of the concrete foundation. Where extension conduits are metal, grounding bushings must be installed with a bonding jumper properly terminated.

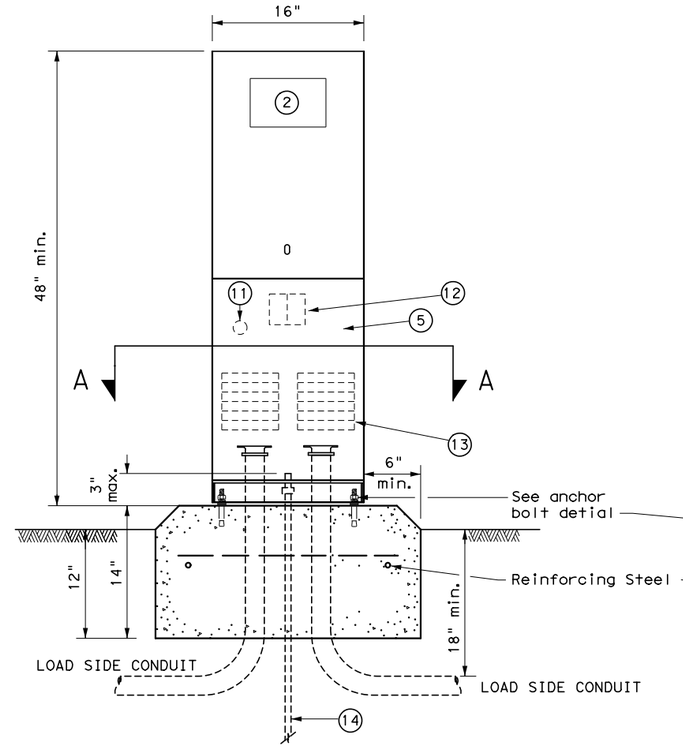

FRONT VIEW

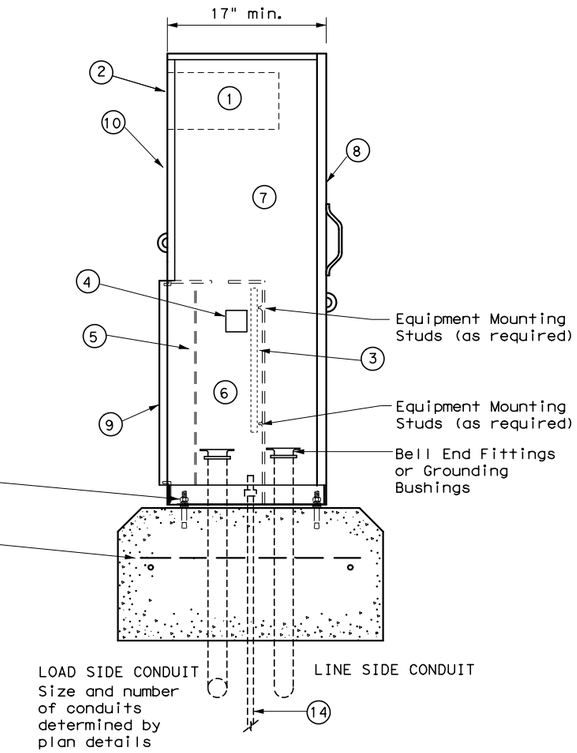

SIDE VIEW

TYPE C shown, TYPE A similar except that TYPE A shall have individual circuit breakers (CB) mounted on an equipment mounting panel. CB Handles shall protrude through hinged deadfront trim.

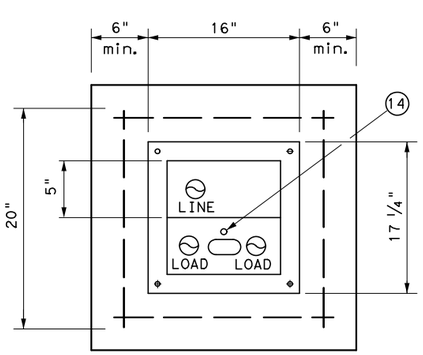

SECTION A-A

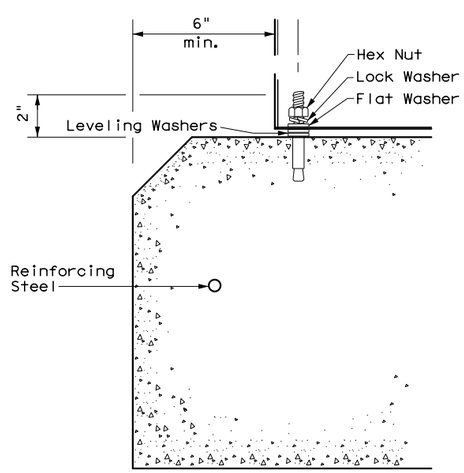

ANCHOR BOLT DETAIL

LEGEND	
1	Meter Socket, (when required)
2	Meter Socket Window, (when required)
3	Equipment Mounting Panel
4	Photo Electric Control Window, (When required)
5	Hinged Deadfront Trim
6	Load Side Conduit Trim
7	Line Side Conduit Area
8	Utility Access Door, with handle
9	Pedestal Door
10	Hinged Meter Access
11	Control Station (H-O-A Switch)
12	Main Disconnect
13	Branch Circuit Breakers
14	Copper Clad Ground Rod - 5/8" X 10'

Texas Department of Transportation

Traffic Operations Division Standard

ELECTRICAL DETAILS
ELECTRICAL SERVICE SUPPORT
PEDESTAL SERVICE TYPE PS

ED(9)-14

FILE: ed9-14.dgn	DN: TxDOT	CK: TxDOT	DW: TxDOT	CK: TxDOT
© TxDOT October 2014	CONT	SECT	JOB	HIGHWAY
REVISIONS	-	-	-	RM 1431
	DIST	COUNTY		SHEET NO.
	AUS	TRAVIS		261

71J

DISCLAIMER:
The use of this standard is governed by the "Texas Engineering Practice Act". No warranty of any kind is made by TxDOT for any purpose whatsoever. TxDOT assumes no responsibility for the conversion of this standard to other formats or for incorrect results or damages resulting from its use.

DATE:
FILE:

DISCLAIMER: The use of this standard is governed by the "Texas Engineering Practice Act". No warranty of any kind is made by TxDOT for any purpose whatsoever. TxDOT assumes no responsibility for the conversion of this standard to other formats or for incorrect results or damages resulting from its use.

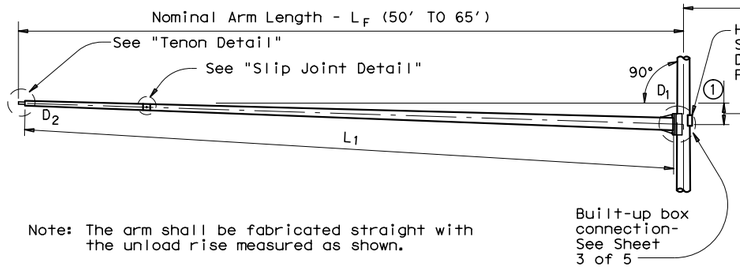

Note: The arm shall be fabricated straight with the unload rise measured as shown.

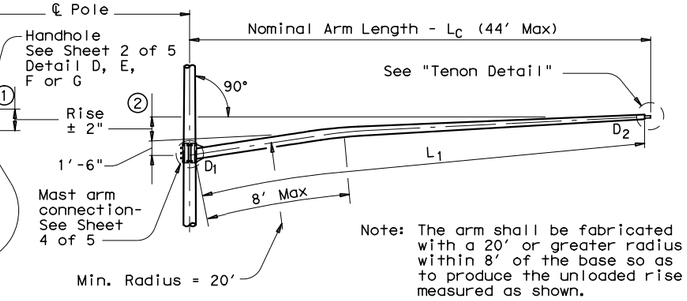

Note: The arm shall be fabricated with a 20' or greater radius within 8' of the base so as to produce the unloaded rise measured as shown.

FIXED MOUNT TRAFFIC SIGNAL ARM

① See Sheet 3 of 5 for Arm Rise

CLAMP-ON TRAFFIC SIGNAL ARM (IF REQUIRED)

② See Sheet 4 of 5 for Arm Rise and Clamp-on Arm Details

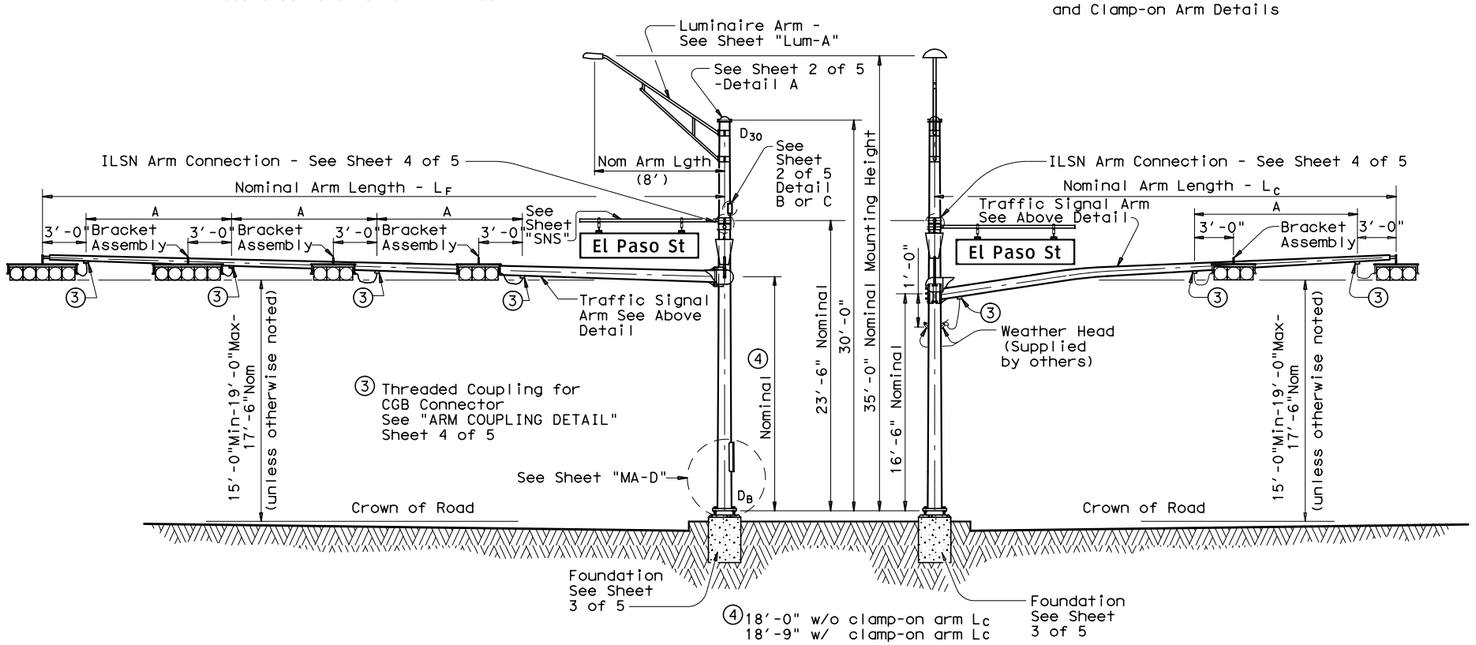

ELEVATION

(Showing fixed mount arm)

STRUCTURE ASSEMBLY

ELEVATION

(Showing clamp-on arm)

TABLE OF DIMENSIONS "A"										
Arm Length	24'	28'	32'	36'	40'	44'	50'	55'	60'	65'
Arm Type II	10'	11'	12'	13'						
Arm Type III			10'	11'	12'	12'				
Arm Type IV							12'	12'	12'	12'

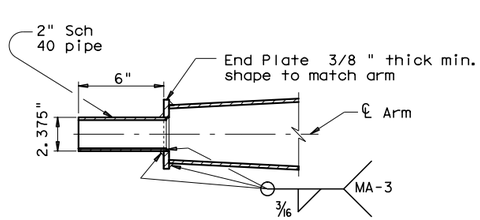

TENON DETAIL

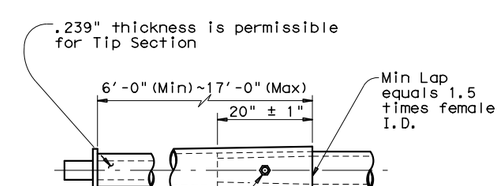

Note: A slip joint is permissible for arms 50' and greater in length. The slip joint shall be made in the shop, but may be match marked and shipped disassembled.

4 - ¾" Dia holes and 1- ⅝" Dia galv A307 bolt. Tack weld nut to thread projection after making joint. Repair damaged galvanizing in accordance with Item 445, "Galvanizing".

SLIP JOINT DETAIL (FIXED MOUNT ARM)

GENERAL NOTES:

Design conforms to 1994 AASHTO Standard Specifications for Structural Supports for Highway Signs, Luminaires, and Traffic Signals and Interim Specifications thereto. Design Wind Speed can be either 100 mph or 80 mph plus a 1.3 gust factor. If clamp-on traffic signal is required, designs are based on an arm included angle of 90 degrees or more. Angles of less than approximately 75 degrees will require a special design.

Poles are designed to support one 8'-0" luminaire arm, two 9'-0" internally lighted street name (ILSN) signs and two traffic signal arms with limited length combinations.

Each arm with its related attachment is shown below

Arm	Equivalent DL ⑤	WL EPA ⑤⑥
8' Luminaire Arm	Luminaire 60 lbs	1.6 sq ft
9' ILSN Arm	Sign 85 lbs	11.5 sq ft
50' to 65' Fixed Mount Arm	Signal Loads 310 lbs	52 sq ft
Up to 44' Clamp-on Arm	Signal Loads 180 lbs	32.4 sq ft

⑤ Equivalent dead load plus horizontal wind load applied at the end of arm except ILSN arm, which applied 4.5' from the centerline of the pole.

⑥ Effective projected area (actual area times drag coefficient) for the application of horizontal wind load.

Except as noted in Sheet 1 thru 5 of 5, other details not covered shall refer to Standard Sheet "MA-D" for pole details, "LUM-A" for luminaire arm and connection details, "SNS" for internally lighted street name sign details, and "TS-FD" for anchor bolt and foundation details.

Fabrication shall be in accordance with Item 686, "Traffic Signal Pole Assemblies (Steel)" and with the details, dimensions, and weld procedures shown herein. Weld references call for preapproved weld procedures which the Fabricator must obtain prior to fabrication. Material, fabrication tolerances, and shipping practices shall also meet the requirements of this sheet and Item 686, "Traffic Signal Pole Assemblies (Steel)".

Unless otherwise noted, all parts shall be galvanized in accordance with Item 445, "Galvanizing" after fabrication.

Deviations from the details and dimensions shown herein require submission of shop drawings in accordance with the Item 441, "Steel Structures". Alternate designs are not acceptable.

Installation of damping plate for the long mast arm is not recommended.

Provision of the bracket assembly used to support the traffic signal heads shall be under the direction of the Engineer for approval.

Design also conforms to NCHRP Report 412 for fatigue resistance except that there are no stiffeners at the base plate. TxDOT is conducting tests to determine if stiffeners at the base plate will or will not result in optimal performance; depending upon the results of the tests, poles may need a retrofit to ensure optimal fatigue performance.

Texas Department of Transportation
Traffic Operations Division

TRAFFIC SIGNAL SUPPORT STRUCTURES

LONG MAST ARM ASSEMBLY (50 TO 65 FT) (80 AND 100 MPH WIND ZONE)

LMA(1)-12

Sheet 1 of 5

© TxDOT July 2000

DN: TXDOT	CK: TXDOT	DW: TXDOT	CK: TXDOT

REVISIONS
4-20-01
1-12

CONT	SECT	JOB	HIGHWAY
-	-	-	RM 1431

DIST	COUNTY	SHEET NO.
AUS	TRAVIS	262

DATE:
FILE:

131A

DISCLAIMER: The use of this standard is governed by the "Texas Engineering Practice Act". No warranty of any kind is made by TxDOT for any purpose whatsoever. TxDOT assumes no responsibility for the conversion of this standard to other formats or for incorrect results or damages resulting from its use.

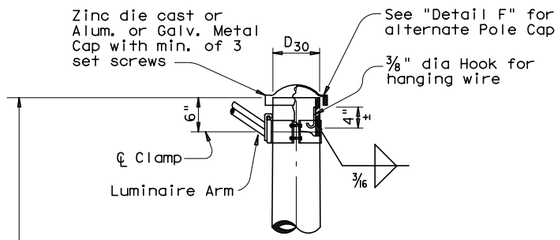

DETAIL A

(for pole with luminaire)

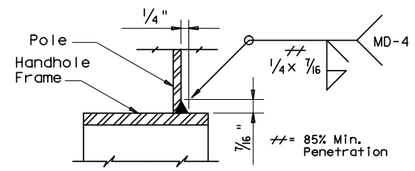

DETAIL H

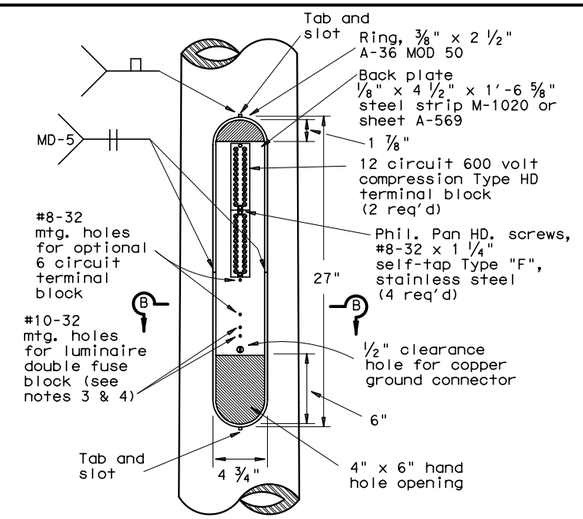

ACCESS COMPARTMENT

MATERIALS	
Round Shafts or Polygonal Shafts (7)	ASTM A595 Gr.A, A588, A1008 HSLAS Gr.50 Class 2, A1011 HSLAS Gr.50 Class 2, A572 Gr.50 or A1011 SS Gr.50 (8)
Plates (7)	ASTM A36, A588, or A572 Gr.50
Connection Bolts	ASTM A325, or A449 except where noted
Pin Bolts	ASTM A325
Pipe (7)	ASTM A53 Gr.B, A501, A1008 HSLAS-F Gr.50, A1011 HSLAS-F Gr.50
Misc. Hardware	Galvanized steel or stainless steel or as noted

(7) ASTM A572, A1008 HSLAS, A1011 HSLAS, A1008 HSLAS-F, A1011 HSLAS-F, or A1011 SS may have higher yield strengths but shall not have less elongation than the grade indicated.

(8) ASTM A1011 SS Gr.50 shall also have a minimum elongation of 18 percent in 8 inches or 23 percent in 2 inches. Material thickness in excess of those stipulated under A1011 SS will be acceptable providing the material meets all other A1011 SS requirements and the requirements of this item.

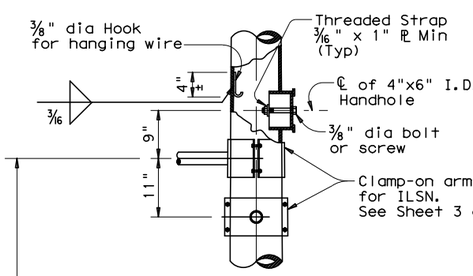

DETAIL B

(If ILSN applied)

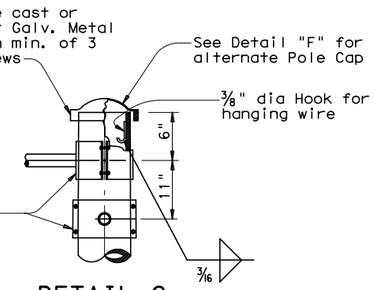

DETAIL C

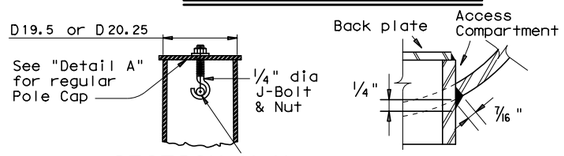

SECTION Y-Y

DETAIL J

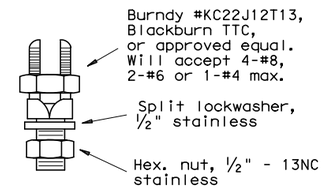

COPPER GROUND CONNECTOR

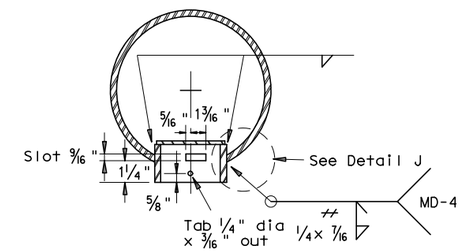

SECTION B-B

Opening for access compartment shall be no more than 1/16 inch wider than the access compartment itself.

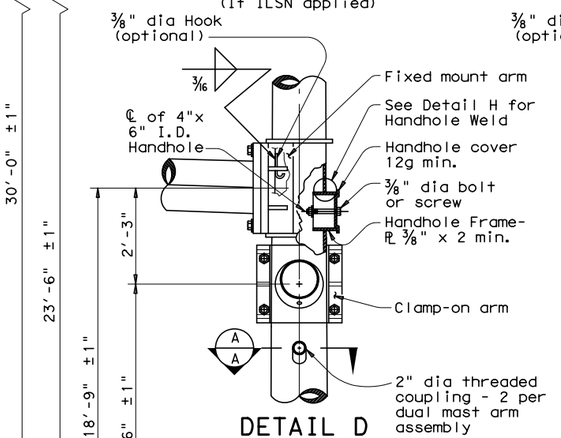

DETAIL D

(for 30' pole with luminaire and ILSN sign)

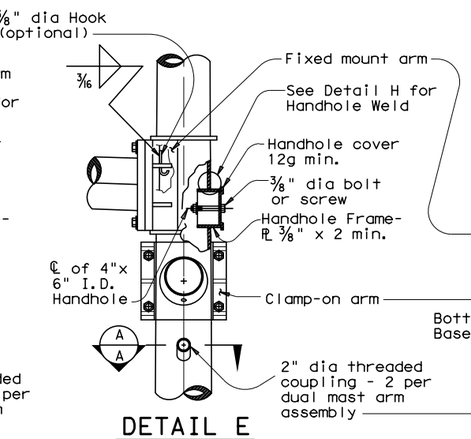

DETAIL E

(for 24' pole with ILSN sign and no luminaire, single or dual mast arm)

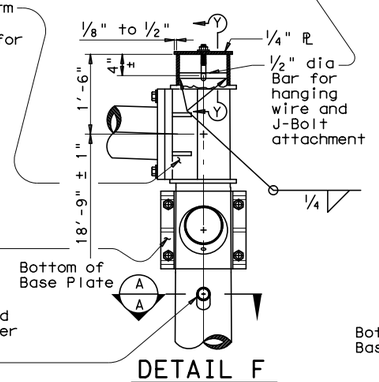

DETAIL F

(for 20.25' pole with no ILSN sign and no luminaire, dual mast arm)

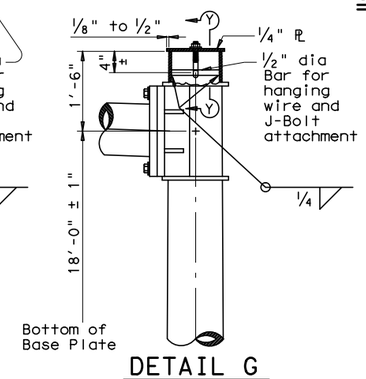

DETAIL G

(for 19.5' pole with no ILSN sign and no luminaire, single mast arm)

ACCESS COMPARTMENT NOTES:

1. The cover shall be one piece formed from ABS plastic, shall be a pearl gray color, and shall be suitable for exposure to harsh sunlight and extreme weather. Cover shall latch with two screw latches and shall fit tightly to the enclosure ring to create a rainproof seal. Latch screws shall be 1/4-20 stainless flat socket head screws with tamper proof feature.
2. The pole manufacturer shall provide with each pole a separate kit consisting of: one cover with two latching assemblies, two terminal strips (Marathon #985GP12CU or approved equal), four #8-32 x 1 1/4" self tapping type "F" stainless steel pan head screws, and one ground connector (Blackburn TTC, Burndy KC22J12T13, or Ilsco SSS-5). The traffic signal contractor shall install the kit items in the field.
3. The screw hole spacing on the enclosure back plate shall be for two Marathon #985GP12 terminal strips, one Marathon #985GP06CU terminal strip, and one Bussmann #BM6032B fuse block.
4. Install one Bussmann #BM6032B, Littelfuse #L60030M-2C, or Ferraz-Shawmut #30352 fuse block for poles where luminaires are to be installed.

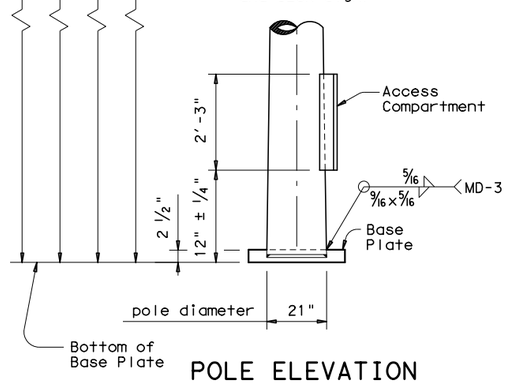

POLE ELEVATION

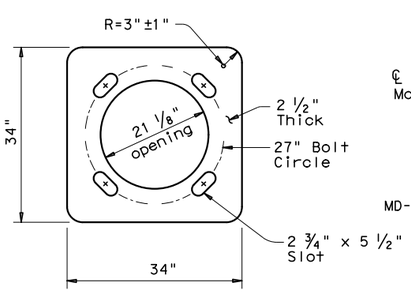

BASE PLATE

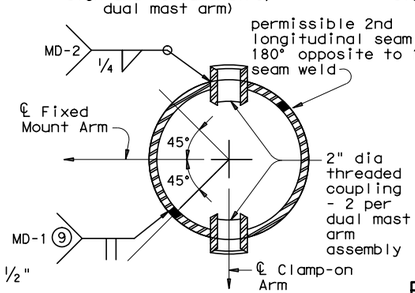

SECTION A-A

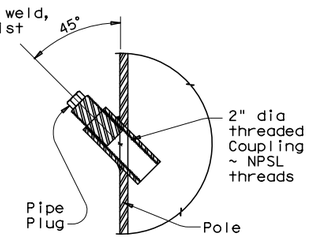

POLE COUPLING DETAIL

(9) Longitudinal seam weld must be oriented within 90° (45° rotation each side) along the fixed mount arm. 60% min penetration required, 100% penetration within 6" of circumferential base weld.

Texas Department of Transportation
Traffic Operations Division

TRAFFIC SIGNAL SUPPORT STRUCTURES

LONG MAST ARM ASSEMBLY (50 TO 65 FT) (80 AND 100 MPH WIND ZONE)

LMA(2)-12

Sheet 2 of 5

© TxDOT July 2000

DN: JSY	CK: ARC	DW: TGG	CK: JSY
REVISIONS 4-20-01 1-12	CONT -	SECT -	JOB -	HIGHWAY RM 1431
DIST AUS	COUNTY TRAVIS	SHEET NO. 263

DATE:
FILE:

131B

DISCLAIMER: The use of this standard is governed by the "Texas Engineering Practice Act". No warranty of any kind is made by TxDOT for any purpose whatsoever. TxDOT assumes no responsibility for the conversion of this standard to other formats or for incorrect results or damages resulting from its use.

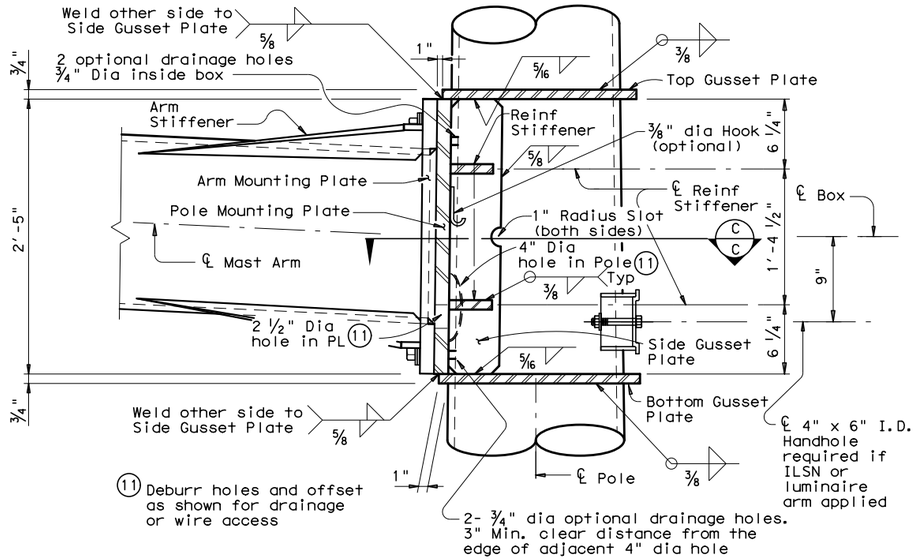

BUILT-UP BOX CONNECTION

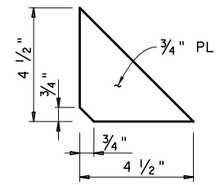

REINFORCING STIFFENER

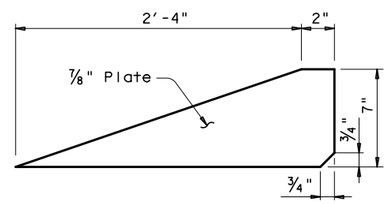

ARM STIFFENER

(Cut to match arm inclination and taper)

Provide Detail shown in SECTION F-F or equivalent 100% complete joint penetration weld from both sides.

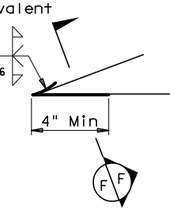

Only 4" length at tip of Arm Stiffener requires a complete joint penetration weld. Smooth weld radius to connect Stiffener. Only a fillet weld is required for the remaining weld length.

DETAIL "K"

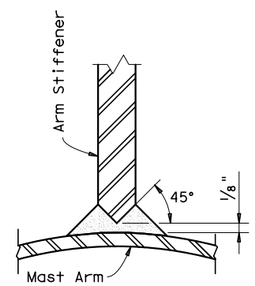

SECTION F-F

Fixed Mount Arm L_F	ROUND POLES (13)					Foundation Type
	D_B	$D_{19.5}$ or $D_{20.25}$	D_{24}	D_{30}	(12) thk	
ft.	in.	in.	in.	in.	in.	
50', 55' 60', 65'	21.0	18.2	17.6	16.8	.3125	48-A

Fixed Mount Arm L_F	ROUND ARMS (13)				
	L_1	D_1	D_2	(12) thk	Rise
ft.	ft.	in.	in.	in.	
50	49	18.5	11.7	.3125	3'- 3"
55	54	18.5	11.0	.3125	3'- 7"
60	59	18.5	10.3	.3125	3'-11"
65	64	18.5	9.6	.3125	4'- 4"

D_B = Pole Base O.D.
$D_{19.5}$ = Pole Top O.D. with no Luminaire and no ILSN (single mast arm)
$D_{20.25}$ = Pole Top O.D. with no Luminaire and no ILSN (dual mast arm)
D_{24} = Pole Top O.D. with ILSN w/out Luminaire
D_{30} = Pole Top O.D. with Luminaire
D_1 = Arm Base O.D.
D_2 = Arm End O.D.
L_1 = Shaft Length
L_F = Fixed Arm Length

(12) Thickness shown is minimum, thicker materials may be used.

(13) Shaft profile 16-sided or 18-sided is considered to be equivalent to round section.

GENERAL NOTES:

Built-up Box Connection: For the welded arm-to-pole connection as a build-up box configuration illustrated here is an example only, fabricators are required to submit a shop drawing of box connection for approval. The drawing shall specify the details of each box element, welds of arm-to-pole connection, arm-to-plate socket connection, and arm rise creation. Specify the proper location of drain holes along the pole. 2 1/2" dia hole in the pole mounting plate and 4" dia hole in the pole need to be aligned for wiring access or drainage. Arm stiffeners cut to match arm inclination and taper shall also be included.

The deviation from flat for either arm or pole mounting plate shall not exceed 3/32 in., which is measured along the center of mounting plate to a radial distance of 13.5 in. The deformed-from-flat connection between arm and pole mounting plates shall not be allowed if the center of both mounting plates cannot contact directly.

Fixed mount details are used for single mast arm assemblies and for the first arm on dual mast arm assemblies.

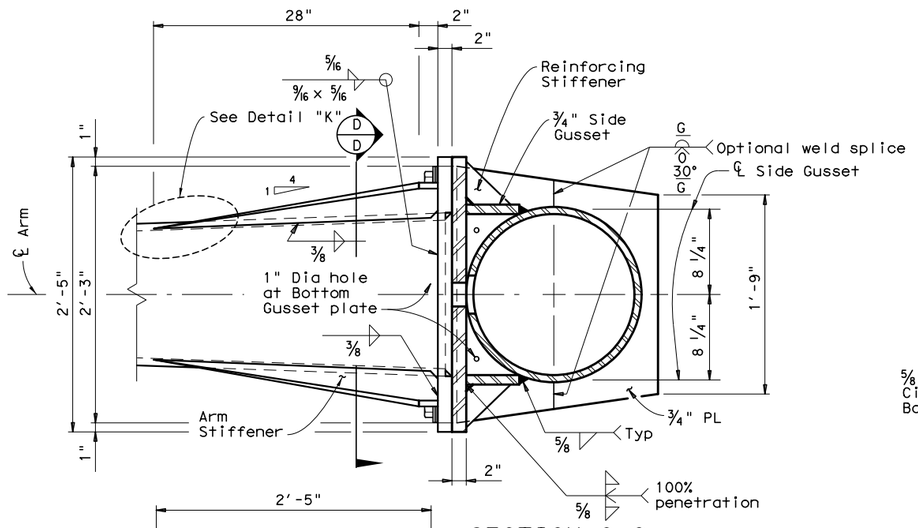

SECTION C-C

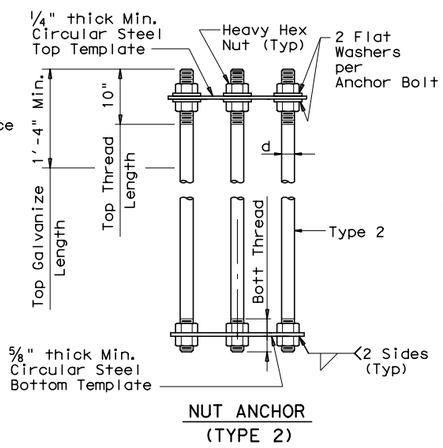

NUT ANCHOR
(TYPE 2)

ANCHOR BOLT ASSEMBLY

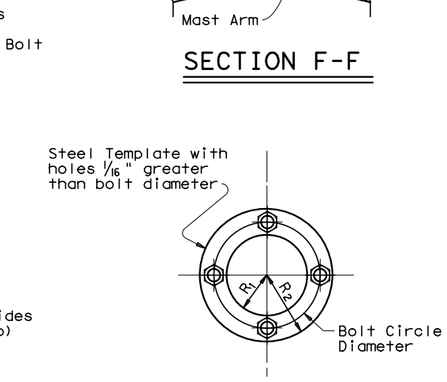

TEMPLATE DETAIL

ANCHOR BOLT & TEMPLATE SIZE						
Bolt Dia in.	Length ‡	Top Thread	Bottom Thread	Bolt Circle	R_2	R_1
2 1/2"	5'-2"	10"	6 1/2"	27"	16"	11"

‡ Min dimension given, longer bolts are acceptable.

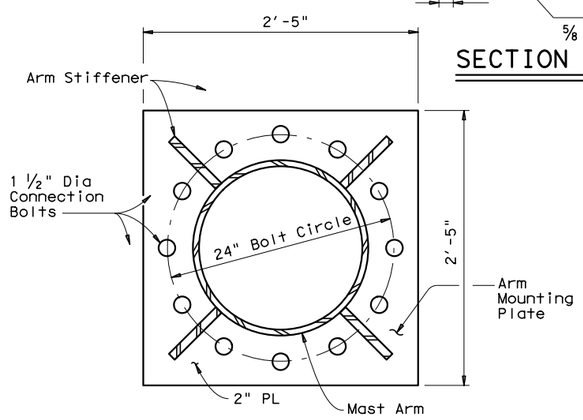

SECTION D-D

FOUNDATION DESIGN TABLE													
FDN TYPE	DRILLED SHAFT DIA	REINFORCING STEEL		DRILLED SHAFT LENGTH-ft (16), (17), (18)			ANCHOR BOLT DESIGN (14)				FOUNDATION DESIGN LOAD (15)		TYPICAL APPLICATION
		VERT BARS	SPIRAL & PITCH	TEXAS CONE PENETROMETER N blows/ft			ANCHOR BOLT DIA	Fy (ksi)	BOLT CIR DIA	ANCHOR TYPE	MOMENT K-ft	SHEAR Kips	
				10	15	40							
48-A	48"	20 #9	#4 at 6"	21.9	19.5	14.7	2 1/2"	55	27"	2	490	10	50' to 65' Mast arm assembly.

SEE SHEET "TS-FD" FOR ADDITIONAL DETAILS.

(14) Anchor bolt design develops the foundation capacity given under Foundation Design Laods.

(15) Foundation Design Loads are the allowable moments and shears at the base of the structure.

(16) Field Penetrometer readings at a depth of approximately 3 to 5 feet may be used to adjust shaft lengths.

(17) If rock is encountered, the Drilled Shaft shall extend a minimum of two diameters into solid rock.

(18) Decimal lengths in Design Table are to allow interpolation for other penetrometer values. Round to nearest foot for entry into Summary Table.

Texas Department of Transportation
Traffic Operations Division

TRAFFIC SIGNAL SUPPORT STRUCTURES
LONG MAST ARM ASSEMBLY (50 TO 65 FT) (80 AND 100 MPH WIND ZONE)

Sheet 3 of 5 LMA(3)-12

©TxDOT July 2000

DN: JSY	CK: ARC	DW: TGG	CK: JSY
CONT	SECT	JOB	HIGHWAY
-	-	-	RM 1431
DIST	COUNTY		SHEET NO.
AUS	TRAVIS		264

REVISIONS
4-20-01
1-12

DATE:
FILE:

131C

DISCLAIMER: The use of this standard is governed by the "Texas Engineering Practice Act". No warranty of any kind is made by TxDOT for any purpose whatsoever. TxDOT assumes no responsibility for the conversion of this standard to other formats or for incorrect results or damages resulting from its use.

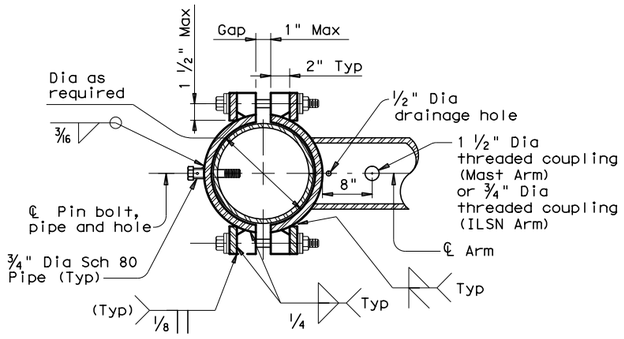

SECTION E-E

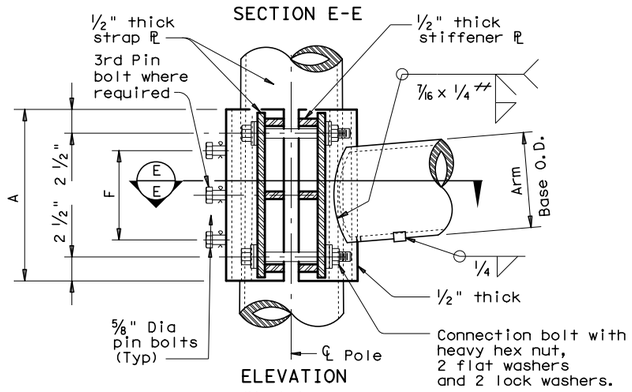

ELEVATION

(Mast Arm or ILSN Arm to pole)

CLAMP-ON CONNECTION

80 MPH WIND

Clamp-on Arm Lc	ROUND ARMS					POLYGONAL ARMS				
	L_1	D_1	D_2	thk (12)	Rise	L_1	D_1	D_2	thk (12)	Rise
ft.	ft.	in.	in.	in.		ft.	in.	in.	in.	
20	19.1	6.5	3.8	.179	1'-9"	19.1	7.0	3.5	.179	1'-8"
24	23.1	7.5	4.3	.179	1'-10"	23.1	7.5	3.5	.179	1'-9"
28	27.1	8.0	4.2	.179	1'-11"	27.1	8.0	3.5	.179	1'-10"
32	31.0	9.0	4.7	.179	2'-1"	31.0	9.0	3.5	.179	2'-0"
36	35.0	9.5	4.6	.179	2'-4"	35.0	10.0	3.5	.179	2'-1"
40	39.0	9.5	4.1	.239	2'-8"	39.0	9.5	3.5	.239	2'-3"
44	43.0	10.0	4.1	.239	2'-11"	43.0	10.0	3.5	.239	2'-6"

100 MPH WIND

Clamp-on Arm Lc	ROUND ARMS					POLYGONAL ARMS				
	L_1	D_1	D_2	thk (12)	Rise	L_1	D_1	D_2	thk (12)	Rise
ft.	ft.	in.	in.	in.		ft.	in.	in.	in.	
20	19.1	8.0	5.3	.179	1'-8"	19.1	8.0	3.5	.179	1'-7"
24	23.1	9.0	5.8	.179	1'-9"	23.1	9.0	3.5	.179	1'-8"
28	27.1	9.5	5.7	.179	1'-10"	27.1	10.0	3.5	.179	1'-9"
32	31.0	9.5	5.2	.239	1'-11"	31.0	9.5	3.5	.239	1'-10"
36	35.0	10.0	5.1	.239	2'-0"	35.0	10.0	3.5	.239	1'-11"
40	39.0	10.5	5.1	.239	2'-3"	39.0	11.0	3.5	.239	2'-1"
44	43.0	11.0	5.1	.239	2'-8"	43.0	11.5	4.0	.239	2'-3"

D1 = Arm Base O.D.
D2 = Arm End O.D.
L1 = Shaft Length
Lc = Clamp-on Arm Length

(12) Thickness shown is minimum, thicker materials may be used.

CLAMP-ON ARM CONNECTION

ILSN Arm Size		A	F	4 Conn. Bolts	⅝" Dia. Pin Bolts
Sch 40 pipe Dia	Thick			Dia	No.
in.	in.	in.	in.	in.	ea
3	.216	10	4	¾	2

Mast Arm Size		A	F	4 Conn. Bolts	⅝" Dia. Pin Bolts
Base Dia	Thick			Dia	No.
in.	in.	in.	in.	in.	ea
6.5	.179	12	6	1	2
7.5	.179	14	8	1	2
8.0	.179	14	8	1	2
9.0	.179	16	10	1	2
9.5	.179	18	12	1 ¼	3
9.5	.239	18	12	1 ¼	3
10.0	.239	18	12	1 ¼	3
10.5	.239	18	12	1 ¼	3
11.0	.239	18	12	1 ¼	3
11.5	.239	18	12	1 ¼	3

GENERAL NOTES:

Clamp-on details are used for the second arm on dual mast arm assemblies or ILSN arm support. For a clamp-on mast arm, a maximum 1 ½" wide vertical slotted hole may be cut in the front clamp plate to facilitate drainage during galvanizing. The slot shall be centered behind the arm and shall be no longer than the arm diameter minus 1". For an ILSN arm, a 1 ½" diameter hole shall be cut in the front clamp plate for wire access. A matched hole shall be field drilled through the pole to provide wire access after arm is oriented. Deburr both holes.

Where duplicate parts occur on a detail, welds shown for part shall apply to all similar parts on the detail.

Pin bolts are required to prevent rotation of clamp-on arms under design wind forces. Pin bolts shall be ASTM A325 with threads excluded from the shear plane. Pin bolt and ¾" diameter pipe shall have 3/16" diameter holes for a ⅛" diameter galvanized cotter pin. Back clamp plate shall be furnished with a ¾" diameter hole for each pin bolt. An 11/16" diameter hole for each pin bolt shall be field drilled through the pole after arm orientations have been approved by the Engineer.

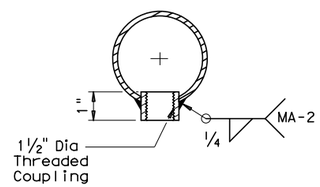

ARM COUPLING DETAIL

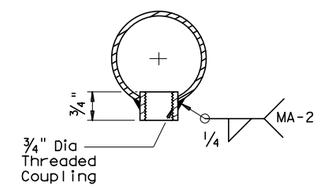

ILSN ARM COUPLING DETAIL

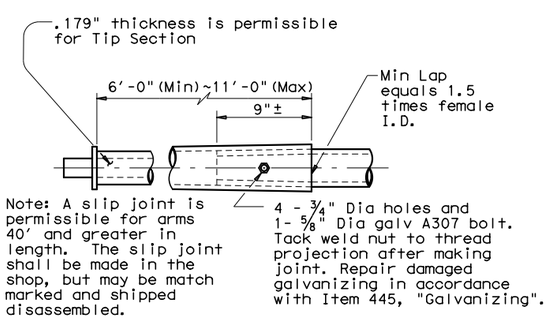

Note: A slip joint is permissible for arms 40' and greater in length. The slip joint shall be made in the shop, but may be match marked and shipped disassembled.

SLIP JOINT DETAIL (CLAMP-ON ARM)

Stainless steel bands (or Cables) and cast bracket as in "Astro-Brac", "Sky Bracket" or "Easy Bracket" with 1 ½" Dia Threaded Coupling.

BRACKET ASSEMBLY

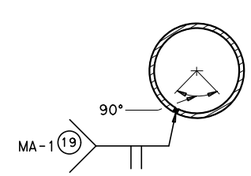

ARM WELD DETAIL

(19) Longitudinal Seam Weld must be oriented within the lower 90° of the signal arm.
60% Min penetration
100% penetration within 6" of circumferential base welds.

Texas Department of Transportation
Traffic Operations Division

TRAFFIC SIGNAL SUPPORT STRUCTURES
LONG MAST ARM ASSEMBLY (50 TO 65 FT) (80 AND 100 MPH WIND ZONE)

Sheet 4 of 5 LMA(4)-12

© TxDOT November 2000

DN: JK	CK: GRB	DW: FDN	CK: CAL
CONT	SECT	JOB	HIGHWAY
-	-	-	RM 1431
DIST		COUNTY	SHEET NO.
AUS		TRAVIS	265

REVISIONS
4-20-01
1-12

131D

DATE:
FILE:

DISCLAIMER: The use of this standard is governed by the "Texas Engineering Practice Act". No warranty of any kind is made by TxDOT for any purpose whatsoever. TxDOT assumes no responsibility for the conversion of this standard to other formats or for incorrect results or damages resulting from its use.

Shipping Parts List

Ship each pole with the following attached: enlarged hand hole, pole cap, fixed arm connection bolts and washers, and any additional hardware listed in the table.

Nominal Arm Length	30′ Poles with Luminaire		24′ Poles with ILSN		19.50′ (Single Mast Arm) 20.25′ (Dual Mast Arm) Poles with no Luminaire and no ILSN	
	See note above plus: one (or two if ILSN attached) small hand hole, clamp-on simplex		See note above plus one small hand hole		See note above	
Single Mast Arm						
Lf ft.	Designation	Quantity	Designation	Quantity	Designation	Quantity
50	50L		50S		50	
55	55L		55S		55	
60	60L		60S		60	
65	65L	2	65S		65	

Dual Mast Arm

Lf ft.	Lc ft.	Designation	Quantity	Designation	Quantity	Designation	Quantity
50	20	5020L		5020S		5020	
	24	5024L		5024S		5024	
	28	5028L		5028S		5028	
	32	5032L		5032S		5032	
	36	5036L		5036S		5036	
	40	5040L		5040S		5040	
	44	5044L		5044S		5044	
55	20	5520L		5520S		5520	
	24	5524L		5524S		5524	
	28	5528L		5528S		5528	
	32	5532L		5532S		5532	
	36	5536L		5536S		5536	
	40	5540L		5540S		5540	
	44	5544L		5544S		5544	
60	20	6020L		6020S		6020	
	24	6024L		6024S		6024	
	28	6028L		6028S		6028	
	32	6032L		6032S		6032	
	36	6036L		6036S		6036	
	40	6040L		6040S		6040	
	44	6044L		6044S		6044	
65	20	6520L		6520S		6520	
	24	6524L		6524S		6524	
	28	6528L		6528S		6528	
	32	6532L		6532S		6532	
	36	6536L		6536S		6536	
	40	6540L		6540S		6540	
	44	6544L		6544S		6544	

Shipping Parts List

Traffic Signal Arms (Fixed Mount) (1 per pole)
Ship each arm with listed equipment attached

Nominal Arm Length	Type IV Arm (4 Signals) 3 Bracket Assembly and 4 CGB Connectors	
ft.	Designation	Quantity
50	50IV	
55	55IV	
60	60IV	
65	65IV	2

Luminaire Arms (1 per 30′ pole)

Nominal Arm Length	Quantity
8′ Arm	2

ILSN Arm (Max. 2 per pole) Ship with clamps, bolts and washers

Nominal Arm Length	Quantity
7′ Arm	
9′ Arm	2

Traffic Signal Arms (80 MPH Clamp-On Mount) (1 per pole) Ship each arm with listed equipment attached

Nominal Arm Length	Type I Arm (1 Signal) 2 CGB connector and 1 clamp w/bolts and washers		Type II Arm (2 Signals) 1 Bracket Assembly and 3 CGB connectors, and 1 clamp w/bolts and washers		Type III Arm (3 Signals) 2 Bracket Assembly and 4 CGB connectors, and 1 clamp w/bolts and washers	
ft.	Designation	Quantity	Designation	Quantity	Designation	Quantity
20	20I-80					
24	24I-80		24II-80			
28	28I-80		28II-80			
32			32II-80		32III-80	
36			36II-80		36III-80	
40					40III-80	
44					44III-80	

Traffic Signal Arms (100 MPH Clamp-On Mount) (1 per pole) Ship each arm with listed equipment attached

Nominal Arm	Type I Arm (1 Signal) 2 CGB connector and 1 clamp w/bolts and washers		Type II Arm (2 Signals) 1 Bracket Assembly and 3 CGB connectors, and 1 clamp		Type III Arm (3 Signals) 2 Bracket Assembly and 4 CGB connectors, and 1 clamp	
ft.	Designation	Quantity	Designation	Quantity	Designation	Quantity
20	20I-100					
24	24I-100		24II-100			
28	28I-100		28II-100			
32			32II-100		32III-100	
36			36II-100		36III-100	
40					40III-100	
44					44III-100	

Anchor Bolt Assemblies (1 per pole)

Anchor Bolt Diameter	Anchor Bolt Length	Quantity
2 1/2 "	5′ - 3"	2

Each anchor bolt assembly consists of the following: Top and bottom templates, 4 anchor bolts, 8 nuts, 8 flat washers and 4 nut anchor devices (type 2) per Standard Drawing "TS-FD". Templates may be removed for shipment.

Foundation Summary Table **

Location Ident.	Avg. N Blow/ft.	No. Each	Drill Shaft *** Length (feet) 48-A
A1	10	1	22
C1	10	1	22
Total Drill Shaft Length			44

Notes

** Foundations may be listed separately or grouped according to similarity of location and type. Quantities are for the Contractor's information only.

*** Decimal lengths in Design Table are to allow interpolation for other penetrometer values. Round to nearest foot for entry into Summary Table.

Abbreviations

Lf= Fixed Arm Length
Lc= Clamp-on Arm Length (44′ Max.)

FIRM #: F-928
STATE OF TEXAS
BRIAN DAVID VAN DE WALLE
68525
REGISTERED PROFESSIONAL ENGINEER
10/3/2016

Texas Department of Transportation
Traffic Operations Division

LONG MAST ARM ASSEMBLY PARTS LIST

LMA(5)-12

Sheet 5 of 5

© TxDOT November 2000

DN: JK	CK: GRB	DW: FDN	CK: CAL
CONT	SECT	JOB	HIGHWAY
-	-	-	RM 1431
DIST		COUNTY	SHEET NO.
AUS		TRAVIS	266

REVISIONS
4-20-01
1-12

DATE:
FILE:

131E

DISCLAIMER: The use of this standard is governed by the "Texas Engineering Practice Act". No warranty of any kind is made by TxDOT for any purpose whatsoever. TxDOT assumes no responsibility for the conversion of this standard to other formats or for incorrect results or damages resulting from its use.

ARM SIZE D_1	‡	A	B	C	D	E	CONN BOLT DIA
in.	in.	in.	in.	in.	in.	in.	in.
6.5	.179	12	9	9	6	1 3/4	1
7.5	.179	13	9	10	6	1 3/4	1
8.0	.179	14	10	11	7	2	1 1/4
9.0	.179	16	11	13	8	2	1 1/4
9.5	.179	17	12	14	9	2	1 1/4
9.5	.239	18	12	15	9	2	1 1/4
10.0	.239	18	12	15	9	2	1 1/4
10.5	.239	18	13	15	10	3	1 1/2
11.0	.239	18	13	15	10	3	1 1/2

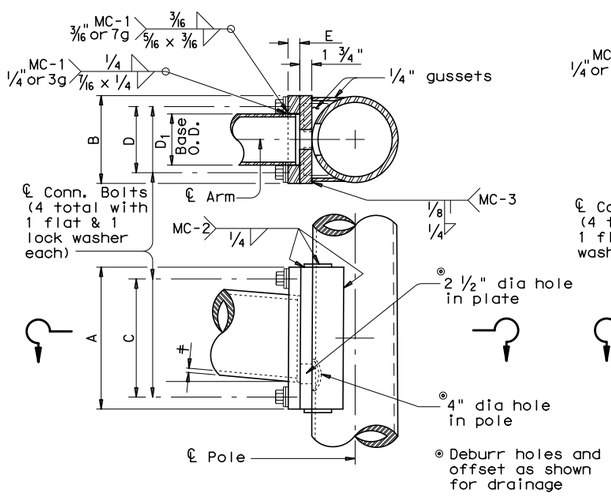

FIXED MOUNT DETAIL 1

ARM SIZE D_1	‡	A	F	CONN. BOLTS No.	CONN. BOLTS Dia	PIN BOLTS No.	PIN BOLTS Dia
in.	in.	in.	in.	ea.	in.	ea.	in.
6.5	.179	12	6	4	1	2	5/8
7.5	.179	14	8	4	1	2	5/8
8.0	.179	14	8	4	1	2	5/8
9.0	.179	16	10	4	1	2	5/8
9.5	.179	18	12	4	1 1/4	3	5/8
9.5	.239	18	12	4	1 1/4	3	5/8
10.0	.239	18	12	4	1 1/4	3	5/8

ARM SIZE D_1	‡	A	B	C	D	E	CONN BOLT DIA
in.	in.	in.	in.	in.	in.	in.	in.
7.0	.179	11	11	8	8	1 3/4	1 1/4
7.5	.179	11	11	8	8	1 3/4	1 1/4
8.0	.179	11	11	8	8	2	1 1/4
9.0	.179	13	13	10	10	2	1 1/4
10.0	.179	13	13	10	10	2	1 1/4
9.5	.239	13	13	10	10	2	1 1/4
10.0	.239	14	14	11	11	2	1 1/2
11.0	.239	14	14	11	11	3	1 1/2
11.5	.239	14	14	11	11	3	1 1/2

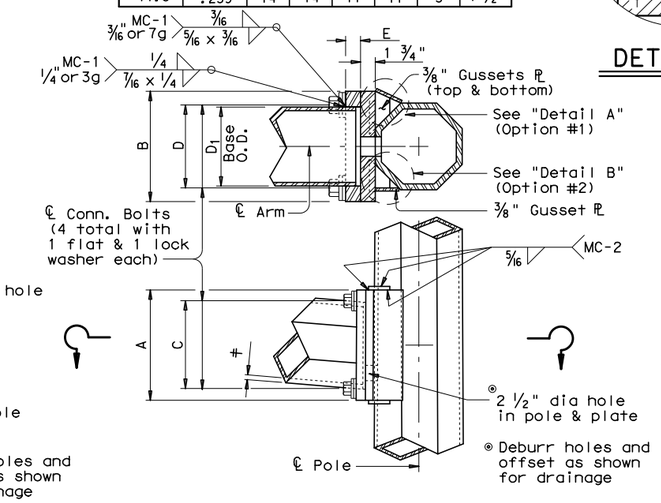

FIXED MOUNT DETAIL 2

ARM SIZE D_1	‡	A	F	T	CONN. BOLTS No.	CONN. BOLTS Dia	PIN BOLTS No.	PIN BOLTS Dia
in.	in.	in.	in.	in.	ea.	in.	ea.	in.
7.0	.179	12	6	3/4	4	3/4	2	5/8
7.5	.179	14	8	3/4	4	3/4	2	5/8
8.0	.179	14	8	3/4	4	3/4	2	5/8
9.0	.179	16	10	7/8	4	1	2	5/8
10.0	.179	18	10	7/8	4	1	2	5/8
9.5	.239	18	10	1	6	1	3	5/8
10.0	.239	18	10	1	6	1	3	5/8

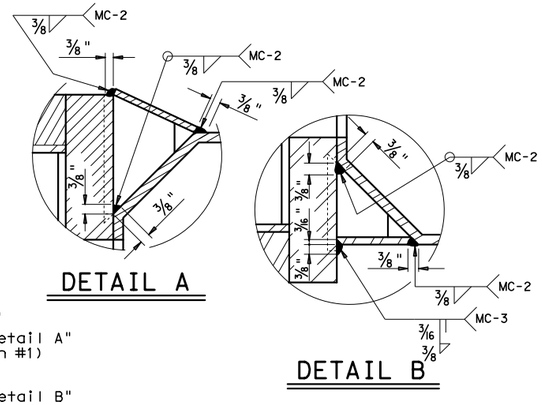

DETAIL A

DETAIL B

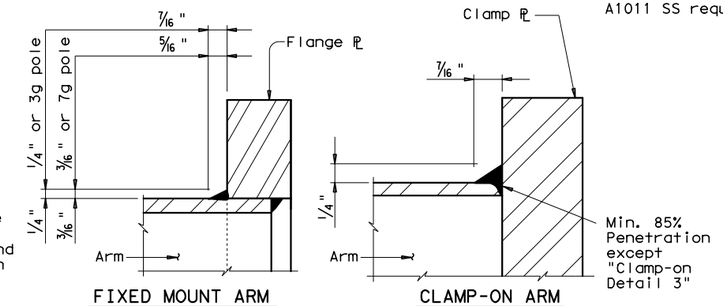

FIXED MOUNT ARM

CLAMP-ON ARM

ARM BASE WELD DETAILS

ARM SIZE D_1	‡	A	F	CONN. BOLTS No.	CONN. BOLTS Dia	PIN BOLTS No.	PIN BOLTS Dia
in.	in.	in.	in.	ea.	in.	ea.	in.
6.5	.179	12	6	4	1	2	5/8
7.5	.179	14	8	4	1	2	5/8
8.0	.179	14	8	4	1	2	5/8
9.0	.179	16	10	4	1	2	5/8
9.5	.179	18	12	6	1	3	5/8
9.5	.239	18	12	6	1	3	5/8
10.0	.239	18	12	6	1	3	5/8

MATERIALS

Round Shafts or Polygonal Shafts ①	ASTM A595 Gr.A, A588, A1008 HSLAS Gr.50 Class 2, A1011 HSLAS Gr.50 Class 2, A572 Gr.50 or A1011 SS Gr.50 ②
Plates ①	ASTM A36, A588, or A572 Gr.50
Connection Bolts	ASTM A325 or A449, except where noted
Pin Bolts	ASTM A325
Pipe ①	ASTM A53 Gr.B, A501, A1008 HSLAS-F Gr.50, A1011 HSLAS-F Gr.50
Misc. Hardware	Galvanized steel or stainless steel or as noted

① ASTM A572, A1008 HSLAS, A1011 HSLAS, A1008 HSLAS-F, A1011 HSLAS-F or A1011 SS may have higher yield strengths but shall not have less elongation than the grade indicated.

② ASTM A1011 SS Gr.50 material shall also have a minimum elongation of 18 percent in 8 inches or 23 percent in 2 inches. Material thickness in excess of those stipulated under A1011 SS will be acceptable providing the material meets all other A1011 SS requirements and the requirements of this item.

GENERAL NOTES:

Clamp-on details are used for the second arm on dual mast arm assemblies. A Maximum 1 1/2" wide vertical slotted hole shall be cut in the front clamp plate to facilitate drainage during galvanizing. The slot shall be centered behind the arm and shall be no longer than the arm diameter minus 1"

Fixed mount details are used for single mast arm assemblies and for the first arm on dual mast arm assemblies.

Where duplicate parts occur on a detail, welds shown for one part shall apply to all similar parts on the detail.

Pin bolts are required to prevent rotation of clamp-on arms under design wind forces.

NOTE:

Pin bolts shall be A325 with threads excluded from the shear plane. Pin bolt and 3/4" dia pipe shall have 3/16" dia holes for a 1/8" dia galvanized cotter pin. Back clamp plate shall be furnished with a 3/4" dia hole for each pin bolt. An 11/16" dia hole for each pin bolt shall be field drilled through the pole after arm orientations have been approved by the Engineer.

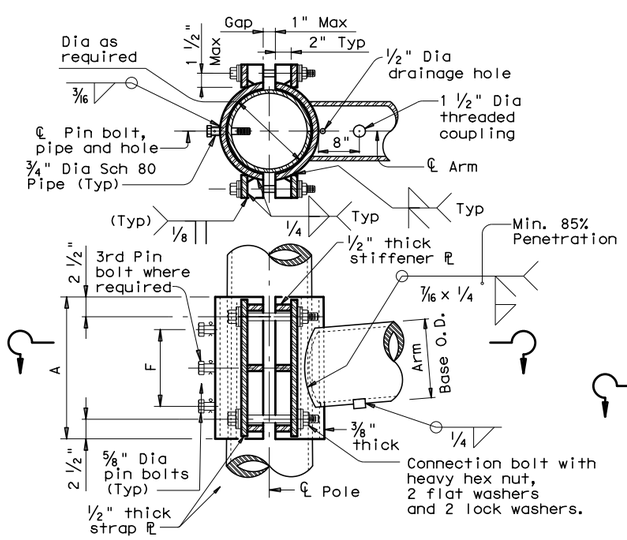

CLAMP-ON DETAIL 1

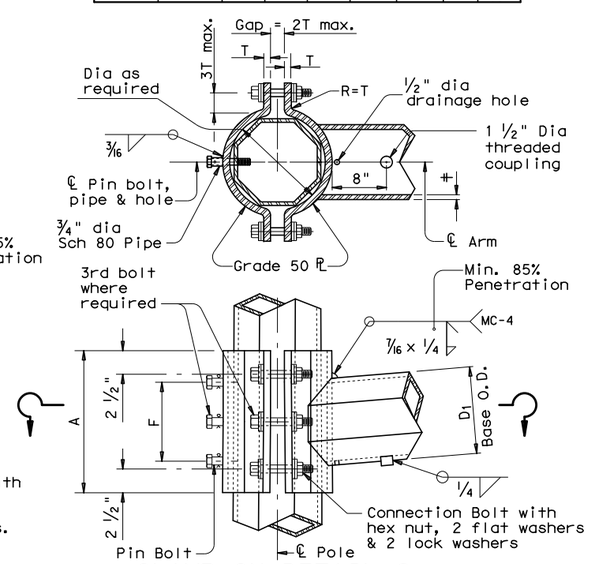

CLAMP-ON DETAIL 2

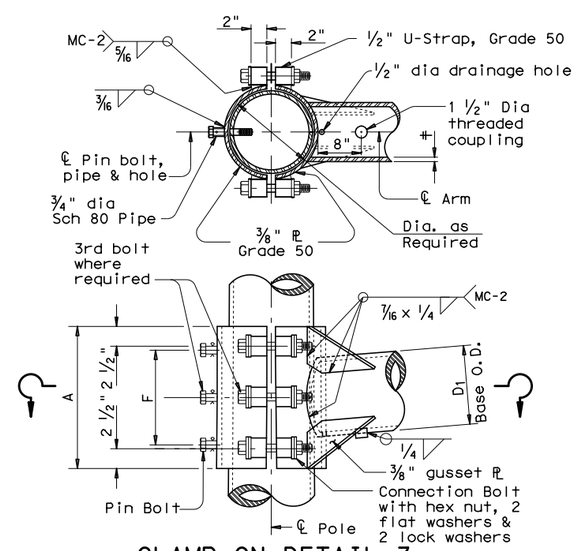

CLAMP-ON DETAIL 3

Texas Department of Transportation
Traffic Operations Division

STANDARD ASSEMBLY FOR TRAFFIC SIGNAL SUPPORT STRUCTURES

MAST ARM CONNECTIONS

MA-C-12

© TxDOT August 1995

DN: MS	CK: JSY	DW: MMF	CK: JSY
CONT	SECT	JOB	HIGHWAY
-	-	-	RM 1431
DIST		COUNTY	SHEET NO.
AUS		TRAVIS	267

REVISIONS
5-96
5-09
1-12

DATE:
FILE:

126A

DISCLAIMER: The use of this standard is governed by the "Texas Engineering Practice Act". No warranty of any kind is made by TxDOT for any purpose whatsoever. TxDOT assumes no responsibility for the conversion of this standard to other formats or for incorrect results or damages resulting from its use.

TABLE OF DIMENSIONS for ILSN Support Arm Clamp-on Details 1, 2 and 3						
ILSN ARM SIZE	A	F	CONN. BOLTS		PIN BOLTS	
			No.	Dia	No.	Dia
	in.	in.	ea.	in.	ea.	in.
3 in. dia Schedule 40 Pipe	10	4	4	3/4	2	5/8

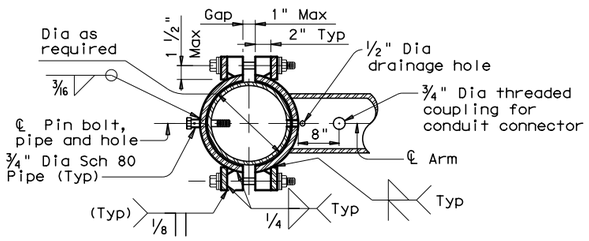

SECTION A-A

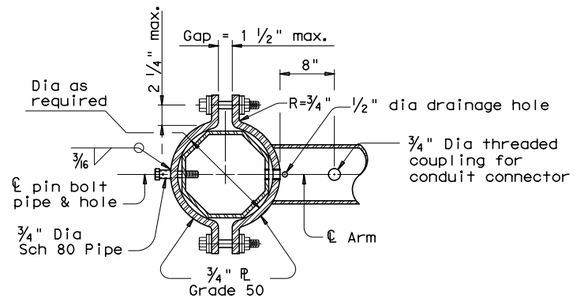

SECTION B-B

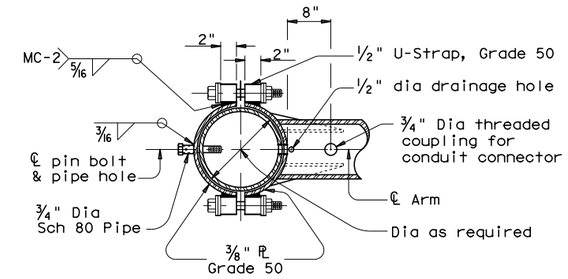

SECTION C-C

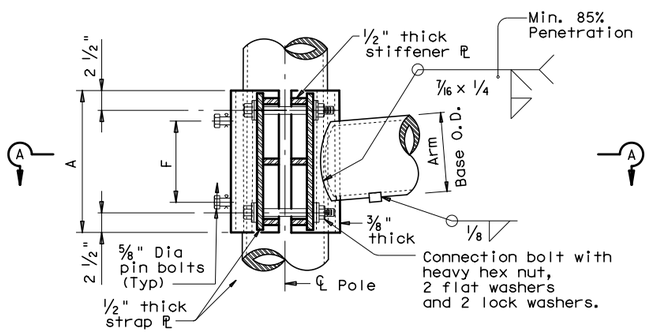

ILSN CLAMP-ON DETAIL 1

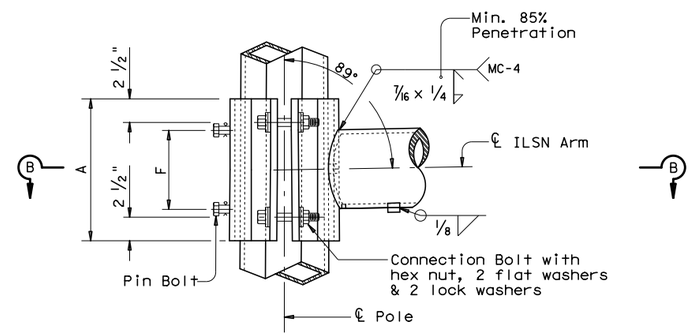

ILSN CLAMP-ON DETAIL 2

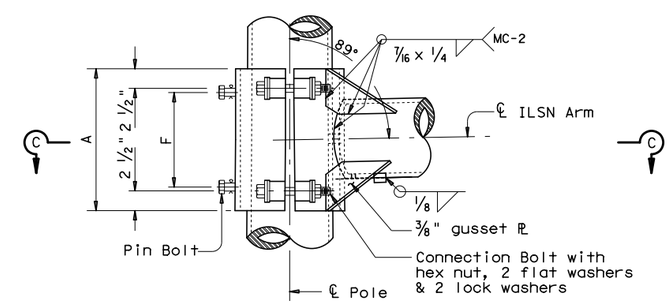

ILSN CLAMP-ON DETAIL 3

GENERAL NOTES:

Clamp-on details shall be used for ILSN support arm assemblies. A 1 1/2" inch diameter hole shall be cut in the front clamp plate for wiring access. A matched hole shall be field drilled through the pole to provide wire access after arm is oriented. Deburr both holes.

Where duplicate parts occur on a detail, welds shown for one part shall apply to all similar parts on the details.

Pin bolts are required to prevent rotation of clamp-on arms under design wind forces.

NOTE:

Pin bolts shall be A325 with threads excluded from the shear plane. Pin bolt and 3/4" dia pipe shall have 3/16" dia holes for a 1/8" dia galvanized cotter pin. Back clamp plate shall be furnished with a 3/4" dia hole for each pin bolt. An 11/16" dia hole for each pin bolt shall be field drilled through the pole after arm orientations have been approved by the Engineer.

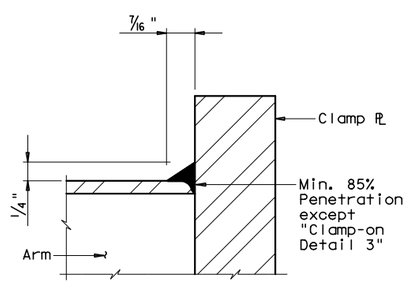

CLAMP-ON ARM

ARM BASE WELD DETAILS

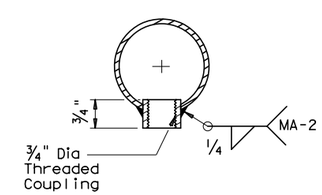

ILSN ARM COUPLING DETAIL

Texas Department of Transportation
Traffic Operations Division

STANDARD ASSEMBLY FOR TRAFFIC SIGNAL SUPPORT STRUCTURES

MAST-ARM CONNECTIONS

MA-C(ILSN)-12

© TxDOT August 1995

DN: MS	CK: JSY	DW: MMF	CK: JSY
REVISIONS 5-96 1-12	CONT	SECT	JOB	HIGHWAY
	-	-	-	RM 1431
DIST	COUNTY		SHEET NO.
AUS	TRAVIS		268

126B

DATE:
FILE:

DISCLAIMER: The use of this standard is governed by the "Texas Engineering Practice Act". No warranty of any kind is made by TxDOT for any purpose whatsoever. TxDOT assumes no responsibility for the conversion of this standard to other formats or for incorrect results or damages resulting from its use.

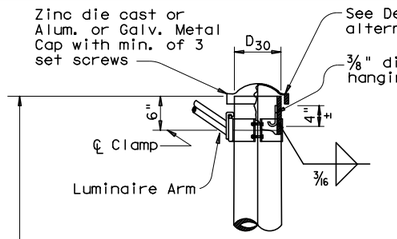

DETAIL A

(for pole with luminaire)

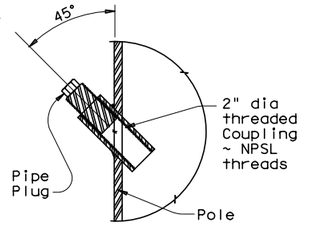

POLE COUPLING DETAIL

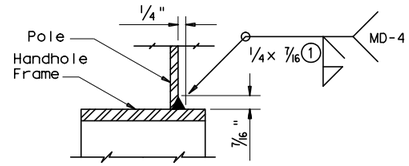

DETAIL G

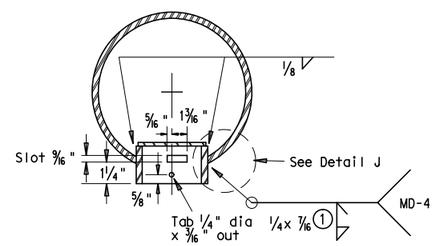

SECTION X-X

Opening for access compartment shall be no more than 1/16 inch wider than the access compartment itself.

DETAIL J

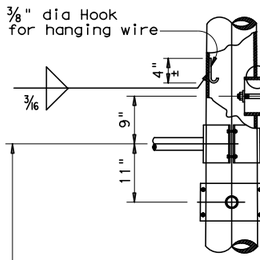

DETAIL B

(If ILSN applied)

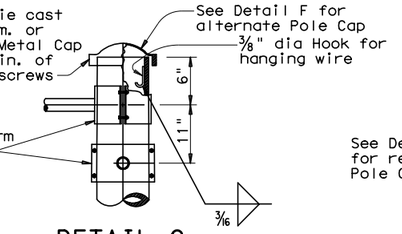

DETAIL C

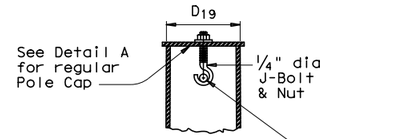

SECTION Y-Y

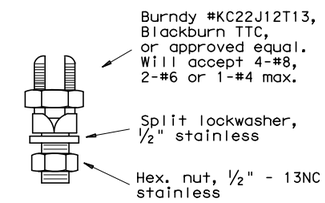

COPPER GROUND CONNECTOR

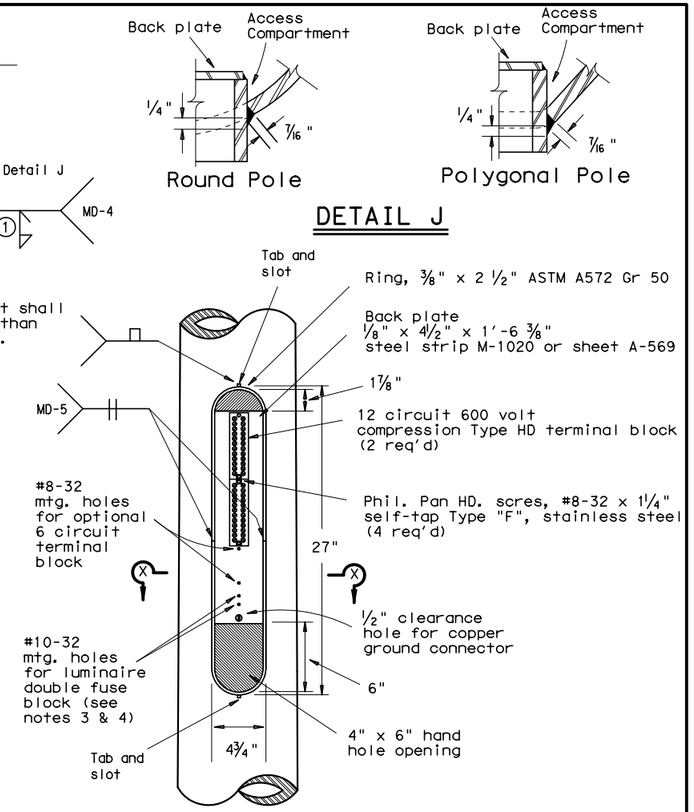

ACCESS COMPARTMENT

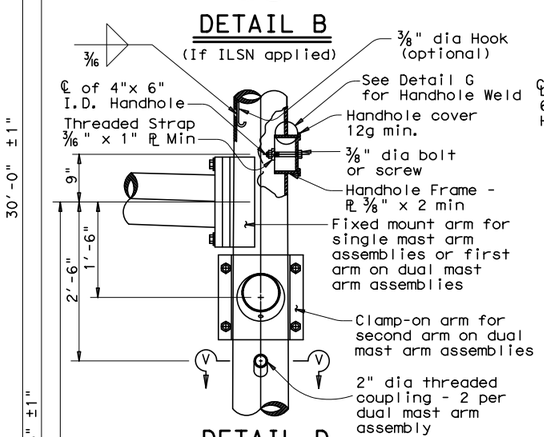

DETAIL D

(for 30' pole with luminaire and ILSN sign)

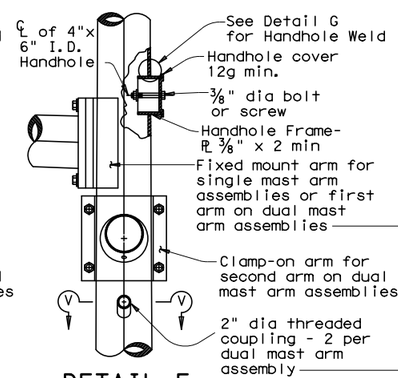

DETAIL E

(for 24' pole with ILSN sign and no luminaire)

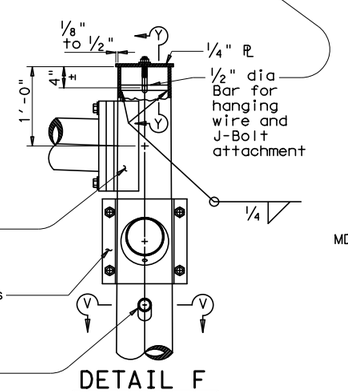

DETAIL F

(for 19' pole with no ILSN sign and no luminaire)

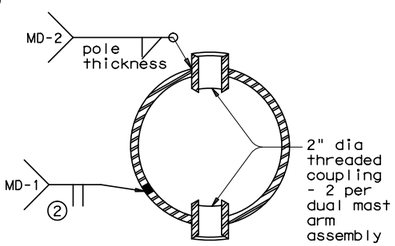

SECTION V-V

Anchor Bolt Diameter	Bolt Hole Diameter	Slot Length	Bolt Circle Diameter	Base PL Dim. L x T	Adjust. Range
1 1/2"	1 3/4"	3 1/2"	17"	18" x 1 1/2"	13.4°
1 3/4"	2"	4"	19"	20" x 1 3/4"	13.5°
2"	2 1/4"	4 1/2"	21"	22" x 2"	13.6°
2 1/4"	2 1/2"	5"	23"	24" x 2 1/4"	13.7°

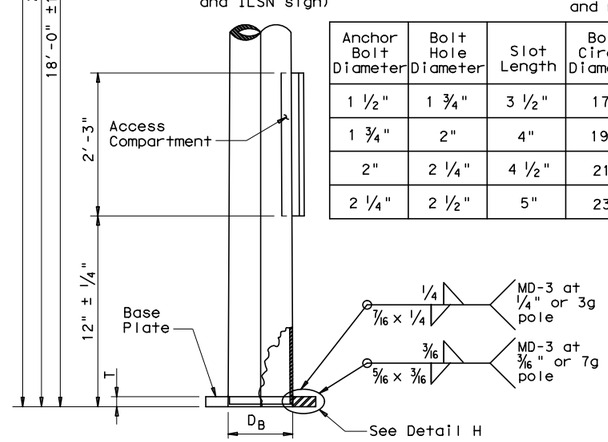

POLE ELEVATION

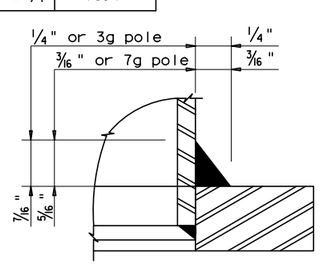

DETAIL H

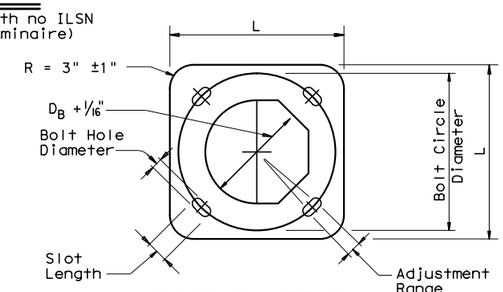

BASE PLATE PLAN

① 85% Min. penetration

② 60% Min. penetration 100% pemetration within 6" of circumferential base welds.

NOTES:

1. The cover shall be one piece formed from ABS plastic, shall be a pearl gray color, and shall be suitable for exposure to harsh sunlight and extreme weather. Cover shall latch with two screw latches and shall fit tightly to the enclosure ring to create a rainproof seal. Latch screws shall be 1/4-20 stainless flat socket head screws with tamper proof feature.
2. The pole manufacturer shall provide with each pole a separate kit consisting of: one cover with two latching assemblies, two terminal strips (Marathon #985GP12CU or approved equal), four #8-32 x 1 1/4" self tapping type "F" stainless steel pan head screws, and one ground connector (Blackburn TTC, Burndy KC22J12T13, or Ilsco SSS-5). The traffic signal contractor shall install the kit items in the field.
3. The screw hole spacing on the enclosure back plate shall be for two Marathon #985GP12 terminal strips, one Marathon #985GP06CU terminal strip, and one Bussmann #BM6032B fuse block.
4. Install one Bussmann #BM6032B, Littelfuse #L60030M-2C, or Ferraz-Shawmut #30352 fuse block for poles where luminaires are to be installed.

Texas Department of Transportation
Traffic Operations Division

TRAFFIC SIGNAL SUPPORT STRUCTURES MAST ARM POLE DETAILS

MA-D-12

© TxDOT August 1995

DN: MS	CK: JSY	DW: FDN	CK: CAL
CONT	SECT	JOB	HIGHWAY
-	-	-	RM 1431
DIST	COUNTY		SHEET NO.
AUS	TRAVIS		269

REVISIONS
8-99
1-12

DATE:
FILE:

DISCLAIMER: The use of this standard is governed by the "Texas Engineering Practice Act". No warranty of any kind is made by TxDOT for any purpose whatsoever. TxDOT assumes no responsibility for the conversion of this standard to other formats or for incorrect results or damages resulting from its use.

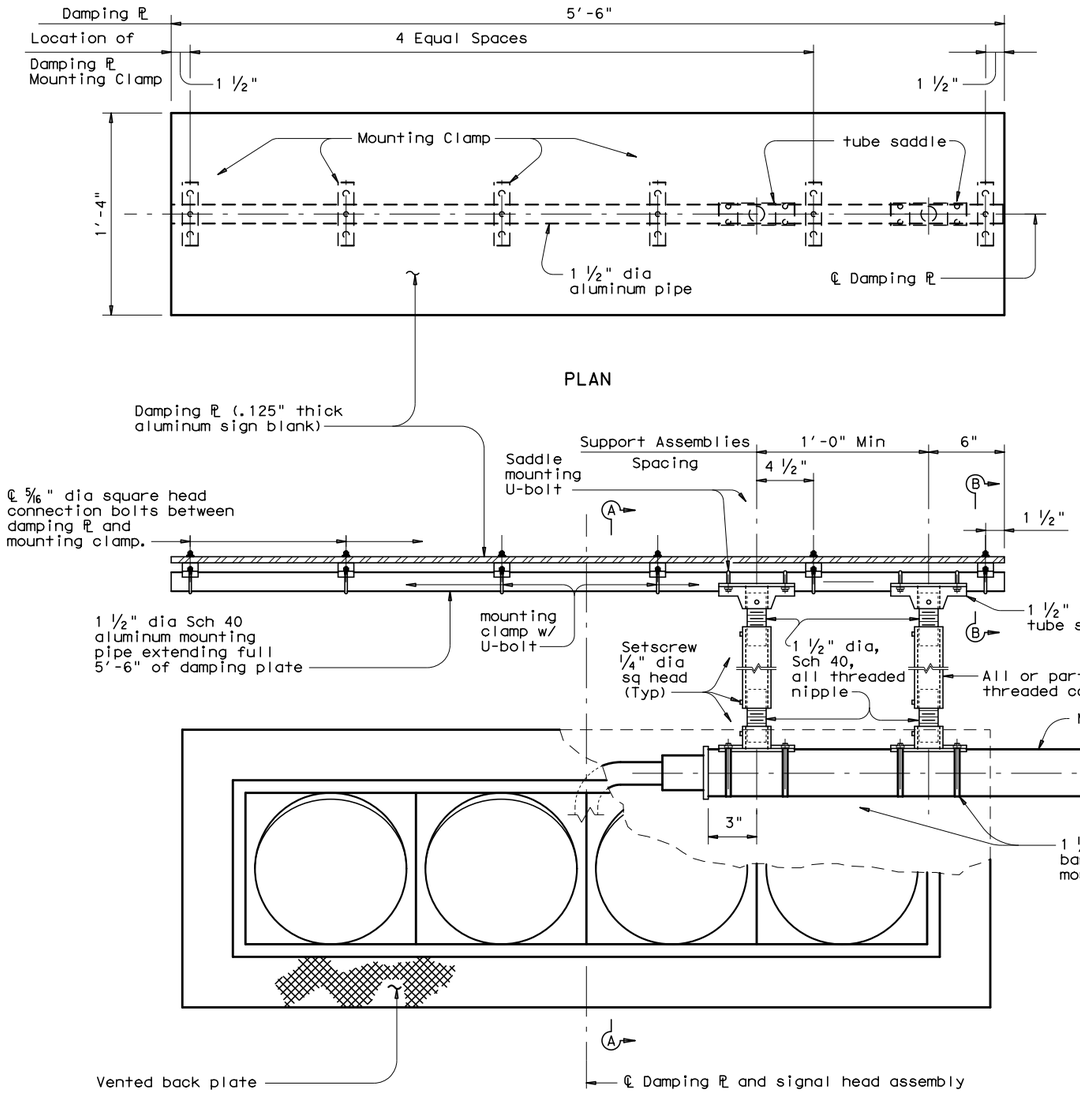

DAMPING PLATE MOUNTING DETAILS

(Showing alternate placement of signal head)

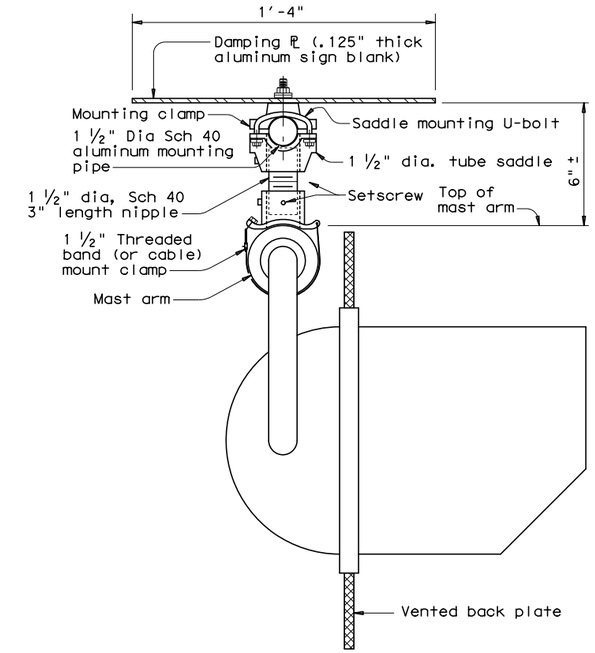

SECTION A-A

(Showing standard placement of signal head)

(Mounting clamp U-bolt is not shown for clarity)

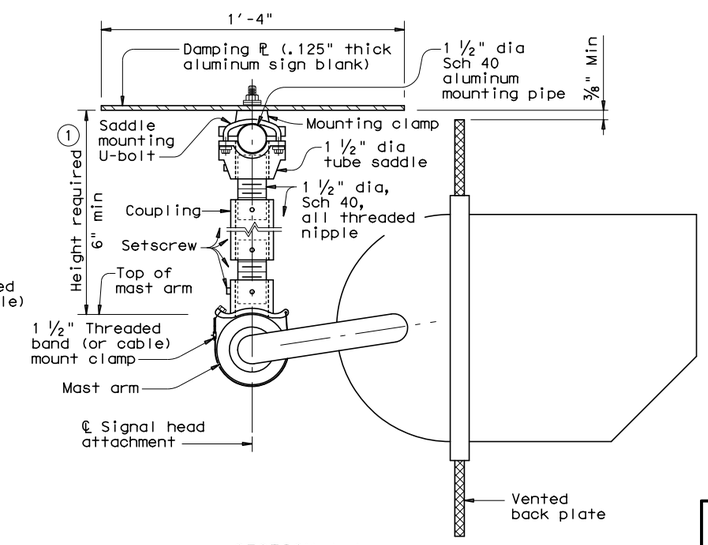

SECTION A-A

(Showing alternate placement of signal head)

(Mounting clamp U-bolt is not shown for clarity)

1 Recommended supporting assemblies to achieve required height			
Height required	One nipple each length	Two nipples each length plus	One coupling each length
6"-6 3/4"	3"	-	-
7"-8 1/2"	4"	-	-
9"-10 1/2"	6"	-	-
11"-15 1/2"	-	4"	5"
16"-24"	-	6"	10"

GENERAL NOTES:

In accordance with the findings of TxDOT sponsored research, the installation of a damping plate in accordance with the details shown here at the end of signal mast arms of SMA and DMA standard structures reduces excessive harmonic vertical vibration, and thus fatigue damage. Any deviation from these details may reduce the effectiveness of this damping device.

Aluminum sign blank for damping plate shall conform to Departmental Material Specifications DMS-7110. Materials for mast arm mounting clamp and tube saddle shall be aluminum castings or aluminum alloys as in accordance with manufacturers' stipulations. Mounting pipe, pipe nipple and coupling shall be aluminum alloy 6061-T6 or 6063-T6. Damping plate mounting clamp and u-bolt assemblies shall conform to Standard sheet SMD(GEN)-08. U-bolts for saddle mounting shall have a minimum yield strength of 36 ksi.

Damping plate shall be mounted horizontally. Position centerline of damping plate to align with centerline of signal head assembly. Vertical clearance between signal head (with or without backing plate) and bottom of damping plate shall be maintained as shown. The attachments shown here are examples only, other supporting details which meet both alignment and vertical clearance requirements are also acceptable.

Unless stipulated by the manufacturers, all steel parts shall be galvanized finish in accordance with Standard Specification Item 445, "Galvanizing".

Contractor shall verify applicable field dimensions before the installation.

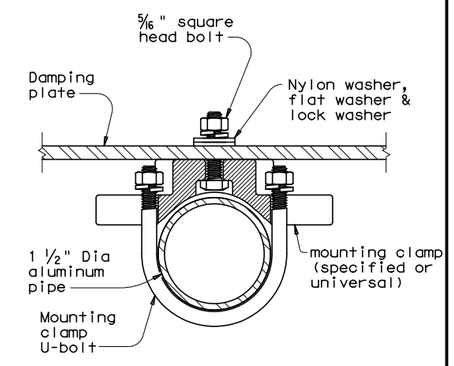

SECTION B-B

(Showing damping plate attachment)

Texas Department of Transportation
Traffic Operations Division

MAST ARM DAMPING PLATE DETAILS

MA-DPD-12

©TxDOT January 2012

DN: JSY	CK: ARC	DW: TGG	CK: JSY
REVISIONS			

CONT	SECT	JOB	HIGHWAY
-	-	-	RM 1431
DIST		COUNTY	SHEET NO.
AUS		TRAVIS	270

DATE:
FILE:

DISCLAIMER: The use of this standard is governed by the "Texas Engineering Practice Act". No warranty of any kind is made by TxDOT for any purpose whatsoever. TxDOT assumes no responsibility for the conversion of this standard to other formats or for incorrect results or damages resulting from its use.

Arm Length	ROUND POLES					POLYGONAL POLES					Foundation Type
	D_B	D_{19}	D_{24}	D_{30}	① thk	D_B	D_{19}	D_{24}	D_{30}	① thk	
ft.	in.	in.	in.	in.	in.	in.	in.	in.	in.	in.	
20	10.5	7.8	7.1	6.3	.179	11.5	8.5	7.7	6.8	.179	30-A
24	11.0	8.3	7.6	6.8	.179	12.0	9.0	8.2	7.3	.179	30-A
28	11.5	8.8	8.1	7.3	.179	12.5	9.5	8.7	7.8	.179	30-A
32	12.5	9.8	9.1	8.3	.179	12.0	9.0	8.2	7.3	.239	30-A
36	12.0	9.3	8.6	7.8	.239	12.5	9.5	8.7	7.8	.239	36-A
40	12.0	9.3	8.6	7.8	.239	13.5	10.5	9.7	8.8	.239	36-A
44	12.5	9.8	9.1	8.3	.239	14.0	11.0	10.2	9.3	.239	36-A
48	13.0	10.3	9.6	8.8	.239	15.0	12.0	11.2	10.3	.239	36-A

Arm Length	ROUND ARMS					POLYGONAL ARMS				
	L_1	D_1	D_2	① thk	Rise	L_1	D_1	② D_2	① thk	Rise
ft.	ft.	in.	in.	in.		ft.	in.	in.	in.	
20	19.1	6.5	3.8	.179	1′-9"	19.1	7.0	3.5	.179	1′-8"
24	23.1	7.5	4.3	.179	1′-10"	23.1	7.5	3.5	.179	1′-9"
28	27.1	8.0	4.2	.179	1′-11"	27.1	8.0	3.5	.179	1′-10"
32	31.0	9.0	4.7	.179	2′-1"	31.0	9.0	3.5	.179	2′-0"
36	35.0	9.5	4.6	.179	2′-4"	35.0	10.0	3.5	.179	2′-1"
40	39.0	9.5	4.1	.239	2′-8"	39.0	9.5	3.5	.239	2′-3"
44	43.0	10.0	4.1	.239	2′-11"	43.0	10.0	3.5	.239	2′-6"
48	47.0	10.5	4.1	.239	3′-4"	47.0	11.0	3.5	.239	2′-9"

D_B = Pole Base O.D.
D_{19} = Pole Top O.D. with no Luminaire and no ILSN
D_{24} = Pole Top O.D. with ILSN w/out Luminaire
D_{30} = Pole Top O.D. with Luminaire
D_1 = Arm Base O.D.
D_2 = Arm End O.D.
L_1 = Shaft Length
L = Nominal Arm Length

① Thickness shown are minimums, thicker materials may be used.

② D_2 may be increased by up to 1" for polygonal arms.

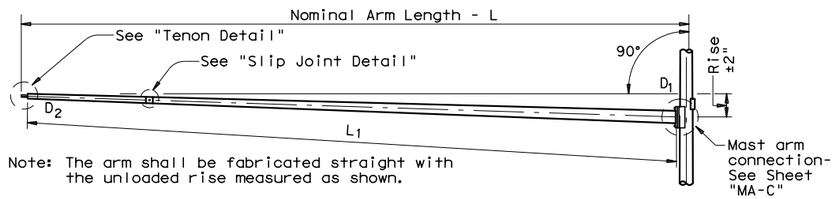

Note: The arm shall be fabricated straight with the unloaded rise measured as shown.

TRAFFIC SIGNAL ARM

(Fixed Mount)

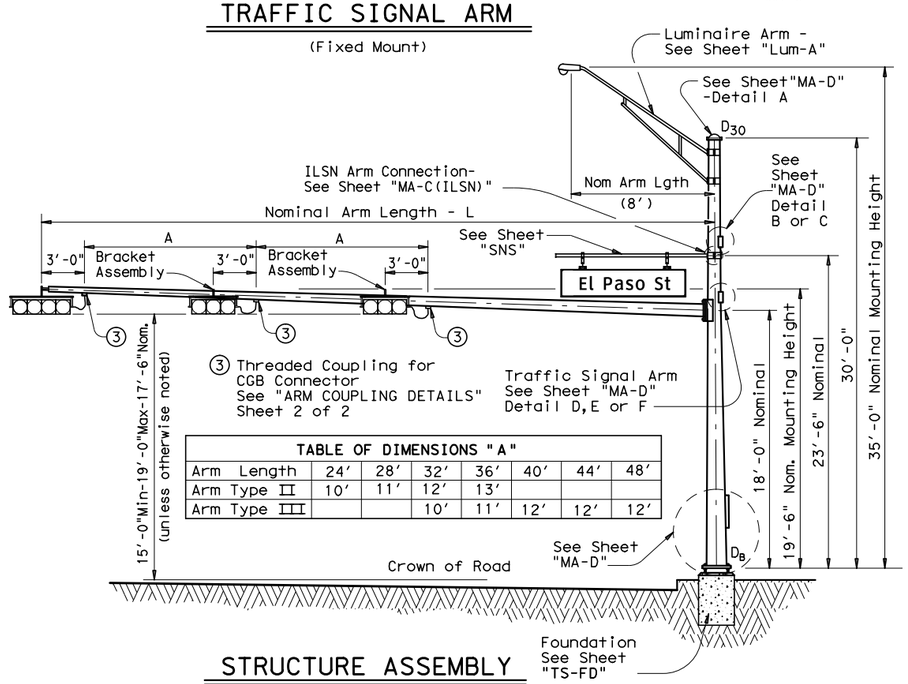

TABLE OF DIMENSIONS "A"

Arm Length	24′	28′	32′	36′	40′	44′	48′
Arm Type II	10′	11′	12′	13′			
Arm Type III			10′	11′	12′	12′	12′

STRUCTURE ASSEMBLY

SHIPPING PARTS LIST

Ship each pole with the following attached: enlarged hand hole, pole cap, fixed-arm connection bolts and washers and any additional hardware listed in the table.

Nominal Arm Length	30′ Poles With Luminaire		24′ Poles With ILSN		19′ Poles With No Luminaire and No ILSN	
	Above hardware plus: One (or two if ILSN attached) small hand hole, clamp-on simplex		Above hardware plus one small hand hole		See note above	
ft	Designation	Quantity	Designation	Quantity	Designation	Quantity
20	20L-80		20S-80		20-80	
24	24L-80		24S-80		24-80	
28	28L-80		28S-80		28-80	
32	32L-80		32S-80		32-80	
36	36L-80		36S-80		36-80	
40	40L-80	1	40S-80		40-80	
44	44L-80	1	44S-80		44-80	
48	48L-80		48S-80		48-80	

Traffic Signal Arms (1 per Pole) Ship each arm with the listed equipment attached

Nominal Arm Length	Type I Arm (1 Signal)		Type II Arm (2 Signals)		Type III Arm (3 Signals)	
	1 CGB connector		1 Bracket Assembly and 2 CGB Connectors		2 Bracket Assemblies and 3 CGB Connectors	
ft	Designation	Quantity	Designation	Quantity	Designation	Quantity
20	20I-80					
24	24I-80		24II-80			
28	28I-80		28II-80			
32			32II-80		32III-80	
36			36II-80		36III-80	
40					40III-80	1
44					44III-80	1
48					48III-80	

Luminaire Arms (1 per 30′ pole)

Nominal Arm Length	Quantity
8′ Arm	2

ILSN Arm (Max. 2 per pole) Ship with clamps, bolts and washers

Nominal Arm Length	Quantity
7′ Arm	
9′ Arm	
10′ Arm	2

Anchor Bolt Assemblies (1 per pole)

Anchor Bolt Diameter	Anchor Bolt Length	Quantity
1 ½"	3′-4"	
1 ¾"	3′-10"	2

Each anchor bolt assembly consists of the following: Top and Bottom templates, 4 anchor bolts, 8 nuts, 8 flat washers, and 4 nut anchor devices (Type 2) per Standard Drawing "TS-FD".

Templates may be removed for shipment.

SHEET 1 OF 2

Texas Department of Transportation
Traffic Operations Division

TRAFFIC SIGNAL SUPPORT STRUCTURES

SINGLE MAST ARM ASSEMBLY

(80 MPH WIND ZONE)

SMA-80(1)-12

FIRM #: F-928

STATE OF TEXAS
BRIAN DAVID VAN DE WALLE
68525
REGISTERED PROFESSIONAL ENGINEER

10/3/2016

© TxDOT August 1995

REVISIONS
5-96
11-99
1-12

DN: MS	CK: JSY	DW: MWF	CK: JSY
CONT	SECT	JOB	HIGHWAY
-	-	-	RM 1431
DIST	COUNTY		SHEET NO.
AUS	TRAVIS		271

122A

DATE:
FILE:

DISCLAIMER: The use of this standard is governed by the "Texas Engineering Practice Act". No warranty of any kind is made by TxDOT for any purpose whatsoever. TxDOT assumes no responsibility for the conversion of this standard to other formats or for incorrect results or damages resulting from its use.

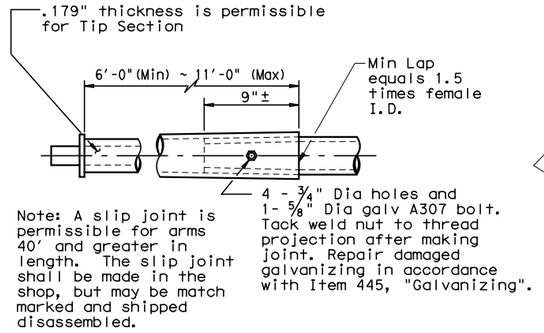

SLIP JOINT DETAIL

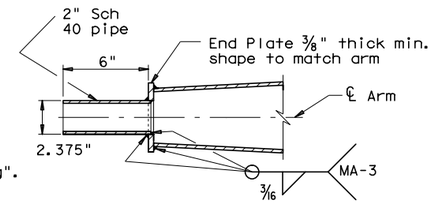

TENON DETAIL

VIBRATION WARNING

Mast Arms of SMA and DMA structures and clamp-on Arms of LMA structures of approximately 40 ft or longer are subject to harmonic vertical vibrations in light wind conditions due to the aeroelastic characteristics of a few of the myriads of possible combinations of the following: signal numbers, weights and positions; existence/solidity of backplates; presence of additional attachments to the arm, such as signs and cameras; arm-wind orientation; and arm-pole stiffness.

Such vibrations may cause fatigue damage to the structure and may lead to galloping in moderate wind conditions which may further damage the structure and alarm the public. Tests have indicated that when wind is blowing toward the back side of signal heads having un-vented backplates attached the probability of unacceptable harmonic vibration and/or galloping is rather high.

If backplates are not required for improved visibility they should not be applied to the signal heads or, if they must be applied, they should be vented as a first and inexpensive measure to mitigate vibrations.

The traffic signal mast arms shall be visually inspected in 5 to 20 mph wind conditions after installation of signal heads and any attachments, including any required backpates. If vertical movements with a total excursion (maximum upward excursion to maximum downward excursion) of more than approximately 8" are observed at the arm tip, a damping plate shall be fitted to the arm. See "Damping Plate Mounting Details" on standard sheet, MA-DPD-10.

This visual inspection shall be repeated after each modification of the structure that could affect its aeroelastic response. Excessive vibrations shall not be allowed to continue for more than two days.

Stainless steel bands (or Cables) and cast bracket as in "Astro-Brac", "Sky Bracket" or "Easy Bracket" with 1 ½" Dia Threaded Coupling.

BRACKET ASSEMBLY

GENERAL NOTES:

Design conforms to 1994 AASHTO Standard Specifications for Structural Supports for Highway Signs, Luminaires, and Traffic Signals and Interim Specifications thereto. Design Wind Speed equals 80 mph plus a 1.3 gust factor.

Poles are designed to support one 8'-0" luminaire arm, one 9'-0" internally lighted street name sign and one traffic signal arm with a length as tabulated. The specified luminaire load applied at the end of the luminaire arm equals 60 lbs vertical dead load plus the horizontal wind load on an effective projected area of 1.6 sq ft. The specified internally lighted street name sign load applied 4.5 ft from the centerline of the pole equals 85 lbs vertical dead load plus horizontal wind load on an effective projected area of 11.5 sq ft. The specified signal load applied at the end of the traffic signal arm equals 180 lbs vertical dead load plus the horizontal wind load on an effective projected area of 32.4 sq ft (actual area times drag coefficient).

See Standard Sheet "MA-D" for pole details, "MA-C" for traffic signal arm connection details, "MA-C (ILSN)" for internally lighted street name sign arm connection details, "LUM-A" for luminaire arm and connection details, "SNS" for internally lighted street name sign details, and "TS-FD" for anchor bolt and foundation details. See "MA-C" for material specifications.

Fabrication shall be in accordance with Item 686, "Traffic Signal Pole Assemblies (Steel)" and with the details, dimensions, and weld procedures shown herein. Weld references call for preapproved weld procedures which the Fabricator must obtain prior to fabrication. Materials, fabrication tolerances, and shipping practices shall meet the requirements of this sheet and Item 686, "Traffic Signal Pole Assemblies (Steel)".

Unless otherwise noted, all parts shall be galvanized in accordance with Item 445, "Galvanizing", after fabrication.

Deviation from the details and dimensions shown herein require submission of shop drawings in accordance with Item 441, "Steel Structures". Alternate designs are not acceptable.

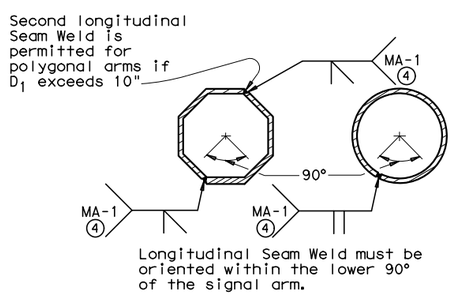

ARM WELD DETAIL

(4) 60% Min. penetration 100% pemetration within 6" of circumferential base welds.

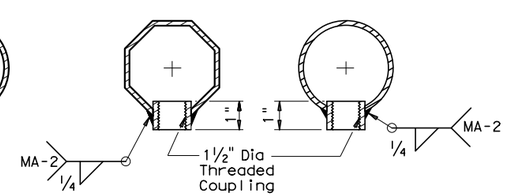

ARM COUPLING DETAILS

Texas Department of Transportation
Traffic Operations Division

TRAFFIC SIGNAL SUPPORT STRUCTURES

SINGLE MAST ARM ASSEMBLY

(80 MPH WIND ZONE)

SMA-80(2)-12

© TxDOT August 1995	DN: MS	CK: JSY	DW: MMF	CK: JSY
REVISIONS	CONT	SECT	JOB	HIGHWAY
5-96	-	-	-	RM 1431
1-12	DIST		COUNTY	SHEET NO.
	AUS		TRAVIS	272

DATE:
FILE:

122B

DISCLAIMER: The use of this standard is governed by the "Texas Engineering Practice Act". No warranty of any kind is made by TxDOT for any purpose whatsoever. TxDOT assumes no responsibility for the conversion of this standard to other formats or for incorrect results or damages resulting from its use.

FOUNDATION DESIGN TABLE

FDN TYPE	DRILLED SHAFT DIA	REINFORCING STEEL: VERT BARS	REINFORCING STEEL: SPIRAL & PITCH	EMBEDDED DRILLED SHAFT LENGTH-ft ④,⑤,⑥ TEXAS CONE PENETROMETER N blows/ft: 10	15	40	ANCHOR BOLT DESIGN ①: ANCHOR BOLT DIA	Fy (ksi)	BOLT CIR DIA	ANCHOR TYPE	FOUNDATION DESIGN LOAD ②: MOMENT K-ft	SHEAR Kips	TYPICAL APPLICATION
24-A	24"	4- #5	#2 at 12"	5.7	5.3	4.5	¾"	36	12 ¾"	1	10	1	Pedestal pole, pedestal mounted controller.
30-A	30"	8- #9	#3 at 6"	11.3	10.3	8.0	1 ½"	55	17"	2	87	3	Mast arm assembly. (see Selection Table)
36-A	36"	10- #9	#3 at 6"	13.2	12.0	9.4	1 ¾"	55	19"	2	131	5	Mast arm assembly. (see Selection Table) 30' strain pole with or without luminaire.
36-B	36"	12- #9	#3 at 6"	15.2	13.6	10.4	2"	55	21"	2	190	7	Mast arm assembly. (see Selection Table) Strain pole taller than 30' & strain pole with mast arm
42-A	42"	14- #9	#3 at 6"	17.4	15.6	11.9	2 ¼"	55	23"	2	271	9	Mast arm assembly. (see Selection Table)

NOTES:

① Anchor bolt design develops the foundation capacity given under Foundation Design Loads.

② Foundation Design Loads are the allowable moments and shears at the base of the structure.

③ Foundations may be listed separately or grouped according to similarity of location and type. Quantities are for the Contractor's information only.

④ Field Penetrometer readings at a depth of approximately 3 to 5 feet may be used to adjust shaft lengths.

⑤ If rock is encountered, the Drilled Shaft shall extend a minimum of two diameters into solid rock.

⑥ Decimal lengths in Design Table are to allow interpolation for other penetrometer values. Round to nearest foot for entry into Summary Table.

FOUNDATION SUMMARY TABLE ③

LOCATION IDENTIFICATION	AVG. N BLOW /ft.	FDN TYPE	NO. EA	DRILLED SHAFT LENGTH ⑥ (FEET): 24-A	30-A	36-A	36-B	42-A
A2	10	24A	1	6				
B1	10	36A	1			14		
B2	10	24A	1	6				
D1	10	36A	1			14		
D2	10	24A	1	6				
TOTAL DRILLED SHAFT LENGTHS				18*		28		

*SUBSIDIARY TO ITEM 0687

FOUNDATION SELECTION TABLE FOR STANDARD MAST ARM PLUS ILSN SUPPORT ASSEMBLIES (ft)

		FDN 30-A	FDN 36-A	FDN 36-B	FDN 42-A
80 MPH DESIGN WIND SPEED	MAX SINGLE ARM LENGTH	32'	48'		
	MAXIMUM DOUBLE ARM LENGTH COMBINATIONS	24' X 24'			
		28' X 28'			
		32' X 28'	32' X 32'		
			36' X 36'		
			40' X 36'		
			44' X 28'	44' X 36'	
100 MPH DESIGN WIND SPEED	MAX SINGLE ARM LENGTH		36'	44'	
	MAXIMUM DOUBLE ARM LENGTH COMBINATIONS		24' X 24'		
			28' X 28'		
			32' X 24'	32' X 32'	
				36' X 36'	
				40' x24'	40' X 36'
					44' x 36'

EXAMPLE:
1. For 80mph design wind speed, foundation 30-A can support up to a 32' arm with another arm up to 28'
2. For 100mph design wind speed, foundation 36-A can support a single 36' mast arm.

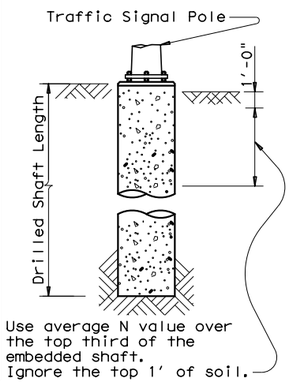

Use average N value over the top third of the embedded shaft. Ignore the top 1' of soil.

ANCHOR BOLT & TEMPLATE SIZES

BOLT DIA IN.	⑦ BOLT LENGTH	TOP THREAD	BOTTOM THREAD	BOLT CIRCLE	R2	R1
¾"	1'-6"	3"	—	12 ¾"	7 ⅛"	5 ⅝"
1 ½"	3'-4"	6"	4"	17"	10"	7"
1 ¾"	3'-10"	7"	4 ½"	19"	11 ¼"	7 ¾"
2"	4'-3"	8"	5"	21"	12 ½"	8 ½"
2 ¼"	4'-9"	9"	5 ½"	23"	13 ¾"	9 ¼"

⑦ Min dimensions given, longer bolts are acceptable.

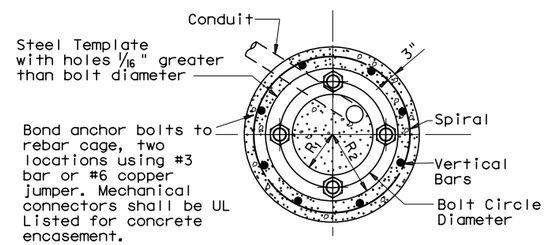

TOP VIEW

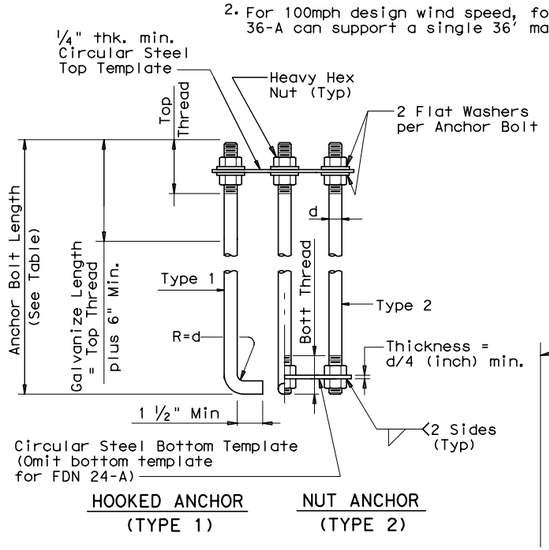

HOOKED ANCHOR (TYPE 1) | NUT ANCHOR (TYPE 2)

ANCHOR BOLT ASSEMBLY

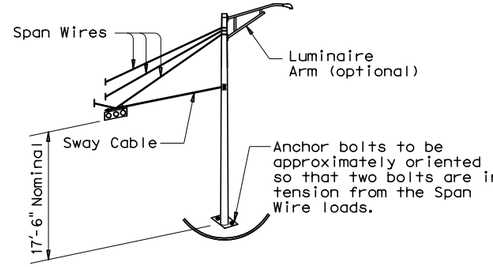

TYPICAL STRAIN POLE ASSEMBLY

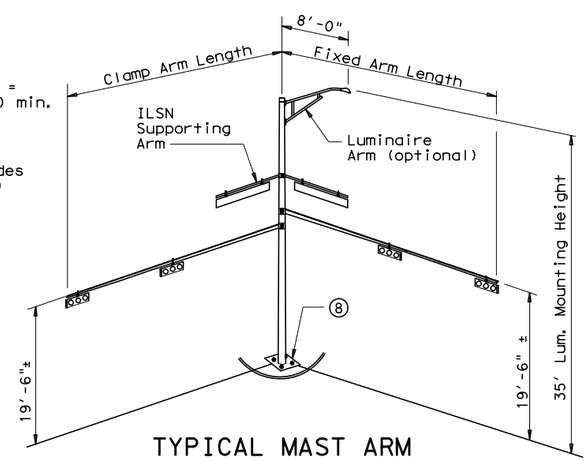

⑧ Orient anchor bolts orthogonal with the fixed arm direction to ensure that two bolts are in tension under dead load.

TYPICAL MAST ARM ASSEMBLY

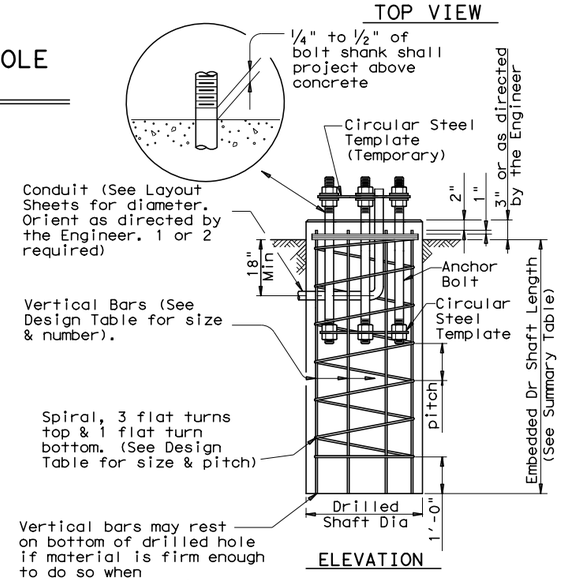

ELEVATION

FOUNDATION DETAILS

GENERAL NOTES:

Design conforms to 1994 AASHTO Standard Specifications for Structural Supports for Highway Signs, Luminaires and Traffic Signals and interim revisions thereto.

Reinforcing steel shall conform to Item 440, "Reinforcing Steel".

Concrete shall be Class "C".

Threads for anchor bolts and nuts shall be rolled or cut threads of 8UN series up to 2" in diameter or UNC series for all sizes. Bolts and nuts shall have Class 2A and 2B fit tolerances. Galvanized nuts shall be tapped after galvanizing.

Anchor bolts that are larger than 1" in diameter shall conform to "alloy steel" or "medium-strength mild steel" per Item 449, "Anchor Bolts". Anchor bolts that are 1" in diameter or less shall conform to ASTM A36. Galvanize a minimum of the top end thread length plus 6" for all anchor bolts unless otherwise noted. Exposed washers and exposed nuts shall be galvanized. All galvanizing shall be in accordance with Item 445, "Galvanizing".

Templates and embedded nuts need not be galvanized. Lubricate and tighten anchor bolts when erecting the structure in accordance with Item 449, "Anchor Bolts".

FIRM #: F-928

STATE OF TEXAS — BRIAN DAVID VAN DE WALLE — 68525 — REGISTERED PROFESSIONAL ENGINEER

10/3/2016

Texas Department of Transportation
Traffic Operations Division

TRAFFIC SIGNAL POLE FOUNDATION

TS-FD-12

© TxDOT August 1995

REVISIONS	DN: MS	CK: JSY	DW: MAO/MMF	CK: JSY/TEB
5-96 11-99 1-12	CONT -	SECT -	JOB -	HIGHWAY RM 1431
	DIST AUS	COUNTY TRAVIS		SHEET NO. 273

DATE:
FILE:

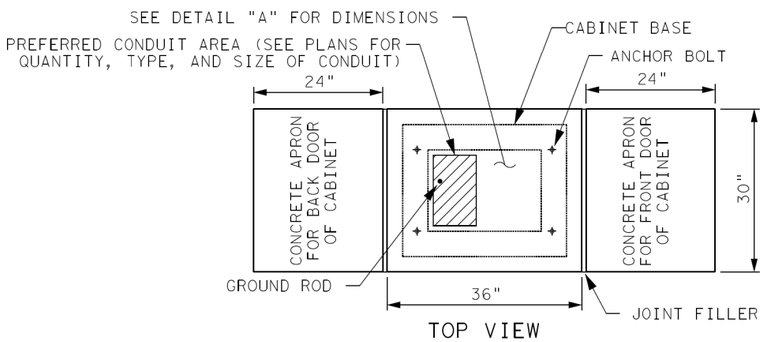

TOP VIEW

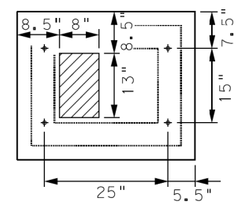

DETAIL A

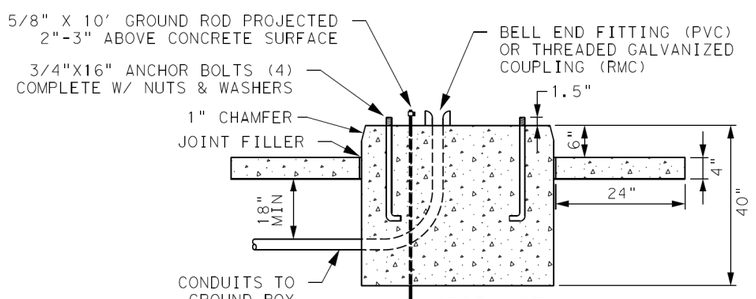

SIDE VIEW

NOTES:
1. INSTALL WATERTIGHT SEALING COMPOUND AROUND BASE OF CABINET.
2. ALL PORTLAND CEMENT CONCRETE SHALL BE CLASS A AS DEFINED IN THE TEXAS DEPARTMENT OF TRANSPORTATION 2014 STANDARD SPECIFICATION ITEM 421 "HYDRAULIC CEMENT CONCRETE".
3. WORK APRONS SHALL BE SLOPED 1/4 IN. PER FT. AWAY FROM CABINET.
4. IF FOUNDATION IS INSTALLED IN OR ADJACENT TO SIDEWALK, THE TOP SURFACE OF THE APRONS SHALL BE FLUSH WITH SIDEWALK SURFACE.
5. CONDUIT IS SHOWN FOR ILLUSTRATIVE PURPOSES. INSTALL CONDUIT IN THE QUANTITY, TYPE, SIZE, AND ORIENTATION SPECIFIED IN THE PLANS. CONDUIT SHALL BE EXPOSED BY A MAXIMUM OF 2.5" ABOVE CONCRETE, INCLUDING BELL END, BUSHING, OR COUPLING. STUB-OUT CONDUITS SHALL EXTEND 12" BEYOND EDGE OF FOUNDATION AND SECURELY CAPPED. CONDUIT INSTALLED IN THE FOUNDATION SHALL BE SUBSIDIARY TO THE FOUNDATION.
6. INSTALL TWO 2" PVC CONDUITS WITH 90° SWEEP AND 24" RADIUS AS DIRECTED BY ENGINEER FOR COMMUNICATION CABLES. STUB OUT IF NOT USED.

CITY OF CEDAR PARK
DEPARTMENT OF PUBLIC WORKS

FOUNDATION DETAILS FOR 332/352 BASE MOUNTED ATC SIGNAL CABINET

DATE: 03/04/2015
SCALE: N.T.S.
INITIAL: S.H.
SHEET 1 OF 1

STATE OF TEXAS
BRIAN DAVID VAN DE WALLE
68525
REGISTERED PROFESSIONAL ENGINEER

10/3/2016

Kimley»Horn
F-928

© 2016 CITY OF CEDAR PARK

ANDERSON MILL AND RM 1431
TRAFFIC SIGNAL

CITY OF CEDAR PARK
FOUNDATION DETAIL

DES: RPO
CK: BDV

CEDAR PARK
JOB NO. 067783504

SHEET NO.
274

DISCLAIMER: The use of this standard is governed by the "Texas Engineering Practice Act". No warranty of any kind is made by TxDOT for any purpose whatsoever. TxDOT assumes no responsibility for the conversion of this standard to other formats or for incorrect results or damages resulting from its use.

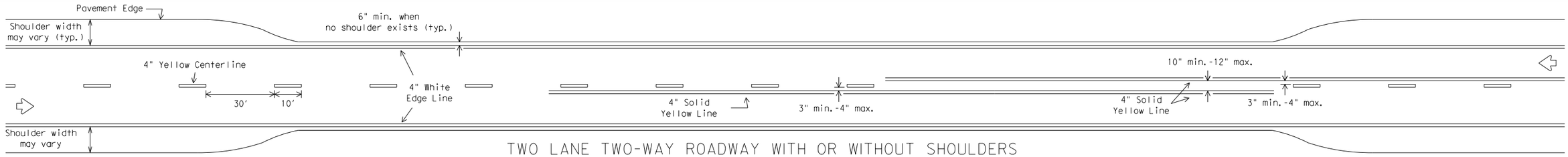

TWO LANE TWO-WAY ROADWAY WITH OR WITHOUT SHOULDERS

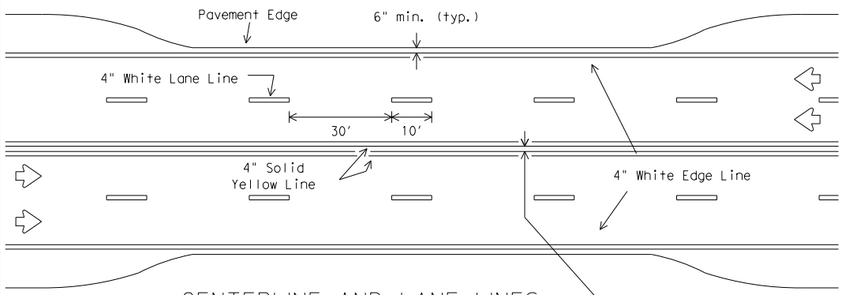

CENTERLINE AND LANE LINES
FOUR LANE TWO-WAY ROADWAY
WITH OR WITHOUT SHOULDERS

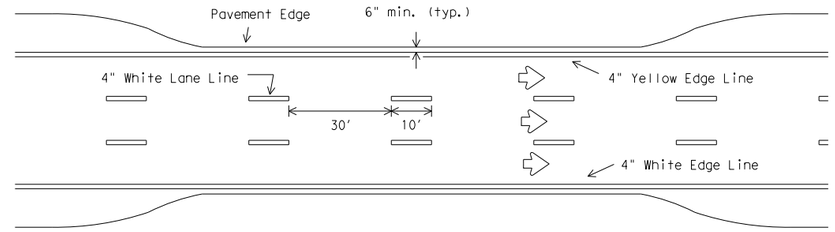

EDGE LINE AND LANE LINES
ONE-WAY ROADWAY
WITH OR WITHOUT SHOULDERS

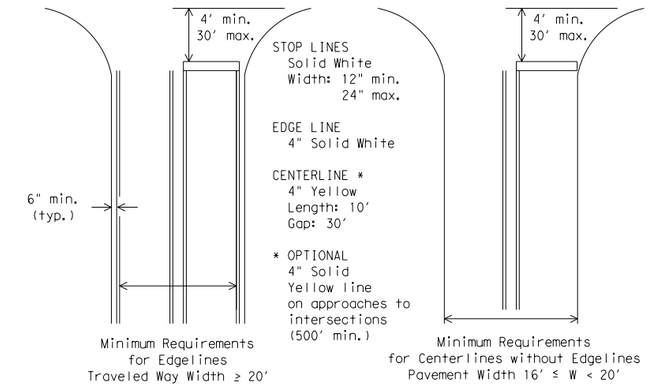

GUIDE FOR PLACEMENT OF STOP LINES, EDGE LINE & CENTERLINE

Based on Traveled Way and Pavement Widths for Undivided Highways

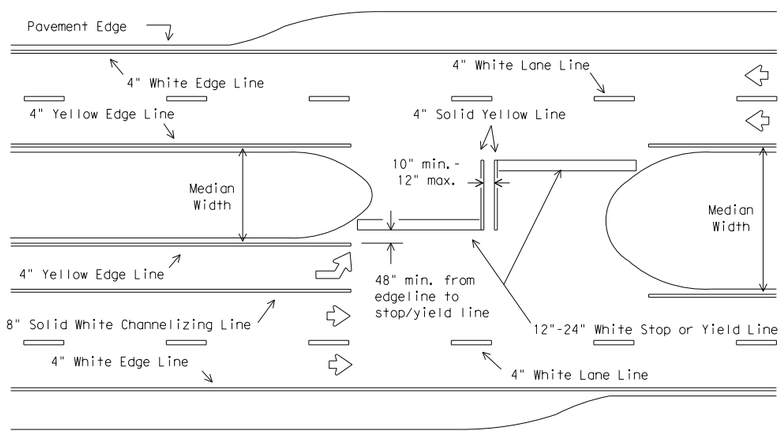

All medians shall be field measured to determine the location of necessary striping. Stop/Yield bars and centerlines shall be placed when the median width is greater than 30 ft. The median width is defined as the area between two roadways of a divided highway measured from edge of traveled way to edge of traveled way. The median excludes turn lanes. The median width might be different between intersections, interchanges and of opposite approaches of the same intersection. The narrow median width will be the controlling width to determine if markings are required.

FOUR LANE DIVIDED ROADWAY INTERSECTIONS

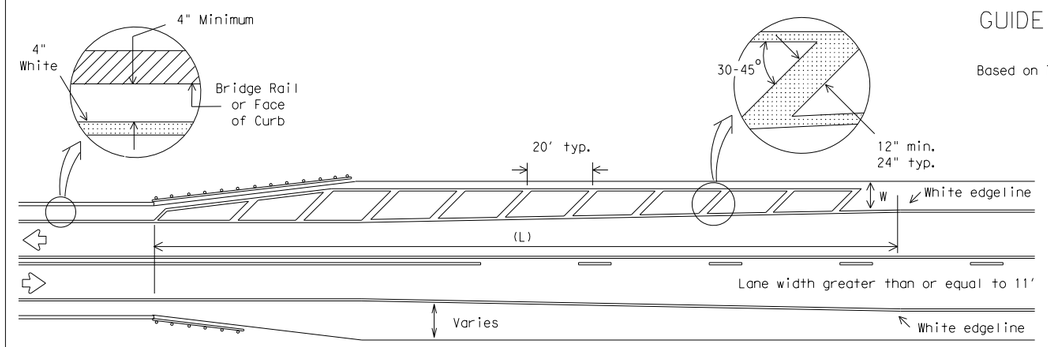

NOTES:

1. No-passing zone on bridge approach is optional but if used, it shall be a minimum 500 feet long.
2. For crosshatching length (L) see Table 1.
3. The width of the offset (W) and the required crosshatching width is the full shoulder width in advance of the bridge.
4. The crosshatching is not required if delineators or barrier reflectors are used along the structure.
5. For guard fence details, refer elsewhere in the plans.

ROADWAYS WITH REDUCED SHOULDER
WIDTHS ACROSS BRIDGE OR CULVERT

TABLE 1 - TYPICAL LENGTH (L)

Posted Speed *	Formula
≤ 40	$L = \frac{WS^2}{60}$
≥ 45	L=WS

* 85th Percentile Speed may be used on roads where traffic speeds normally exceed the posted speed limit. Crosshatching length should be rounded up to nearest 5 foot increment.

L=Length of Crosshatching (FT.) W=Width of Offset (FT.)
S=Posted Speed (MPH)

EXAMPLES:

An 8 foot shoulder in advance of a bridge reduces to 4 feet on a 70 MPH roadway. The length of the cross-hatching should be:

$L = 8 \times 70 = 560$ ft.

A 4 foot shoulder in advance of a bridge reduces to 2 feet on a 40 MPH roadway. The length of the cross-hatching should be:

$L = 4(40)^2 / 60 = 106.67$ ft. rounded to 110 ft.

GENERAL NOTES

1. Edgeline striping shall be as shown in the plans or as directed by the Engineer. The edgeline should typically be placed a minimum of 6 inches from the edge of pavement. This distance may vary due to pavement raveling or other conditions. Edgelines are not required in curb and gutter sections of roadways.

2. The traveled way includes only that portion of the roadway used for vehicular travel and not the parking lanes, sidewalks, berms and shoulders. The traveled ways shall be measured from the inside of edgeline to inside of edgeline of a two lane roadway.

MATERIAL SPECIFICATIONS	
PAVEMENT MARKERS (REFLECTORIZED)	DMS-4200
EPOXY AND ADHESIVES	DMS-6100
BITUMINOUS ADHESIVE FOR PAVEMENT MARKERS	DMS-6130
TRAFFIC PAINT	DMS-8200
HOT APPLIED THERMOPLASTIC	DMS-8220
PERMANENT PREFABRICATED PAVEMENT MARKINGS	DMS-8240

All pavement marking materials shall meet the required Departmental Material Specifications as specified by the plans.

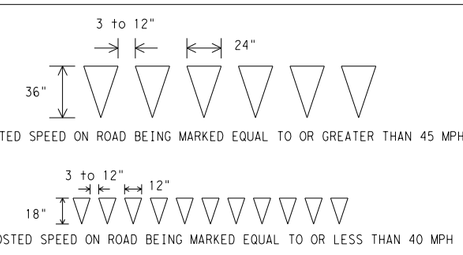

YIELD LINES

Texas Department of Transportation
Traffic Operations Division

TYPICAL STANDARD
PAVEMENT MARKINGS

PM(1)-12

© TxDOT November 1978

DN: TXDOT	CK: TXDOT	DW: TXDOT	CK: TXDOT

REVISIONS	CONT	SECT	JOB	HIGHWAY
8-95 2-12				
5-00				
8-00	DIST		COUNTY	SHEET NO.
3-03				275
22A				

DATE:
FILE:

DISCLAIMER: The use of this standard is governed by the "Texas Engineering Practice Act". No warranty of any kind is made by TxDOT for any purpose whatsoever. TxDOT assumes no responsibility for the conversion of this standard to other formats or for incorrect results or damages resulting from its use.

REFLECTIVE RAISED PAVEMENT MARKERS FOR VEHICLE POSITIONING GUIDANCE

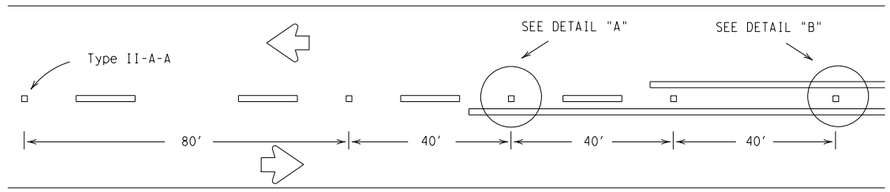

CENTERLINE FOR ALL TWO LANE ROADWAYS

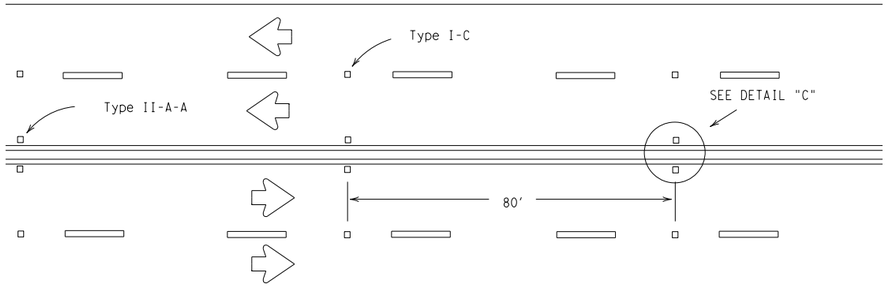

CENTERLINE & LANE LINES FOR FOUR LANE TWO-WAY HIGHWAYS

Raised pavement marker Type I-C, clear face toward normal traffic, shall be placed on 80-foot centers.

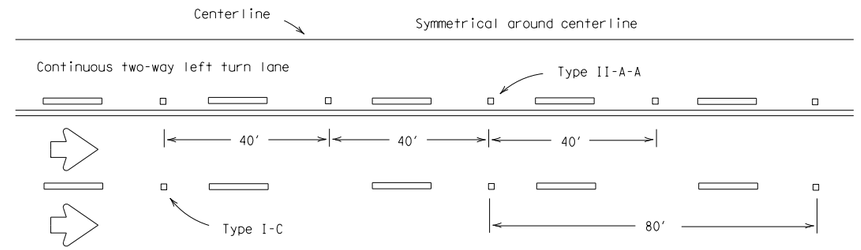

CENTERLINE AND LANE LINES FOR TWO-WAY LEFT TURN LANE

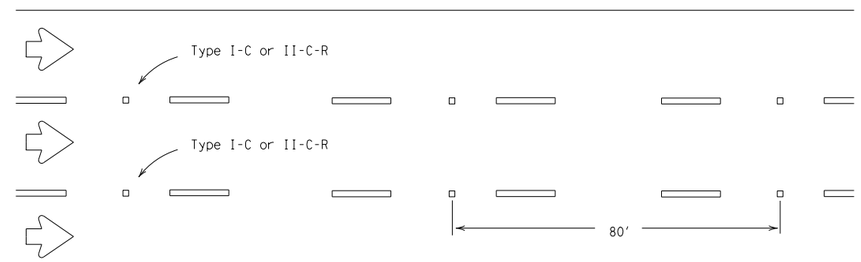

LANE LINES FOR ONE-WAY ROADWAY (NON-FREEWAY FACILITIES)

Raised pavement markers Type II-C-R shall have clear face toward normal traffic and red face toward wrong-way traffic.

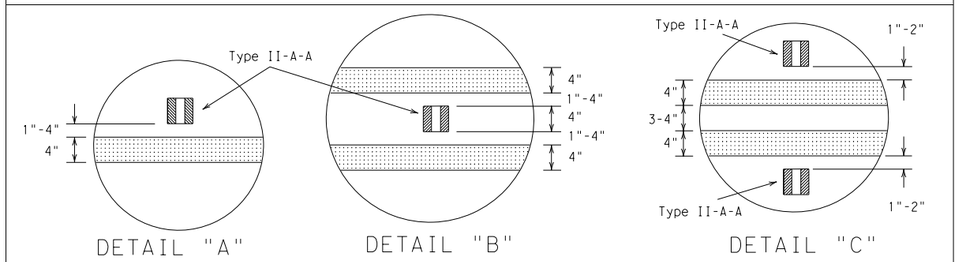

DETAIL "A" DETAIL "B" DETAIL "C"

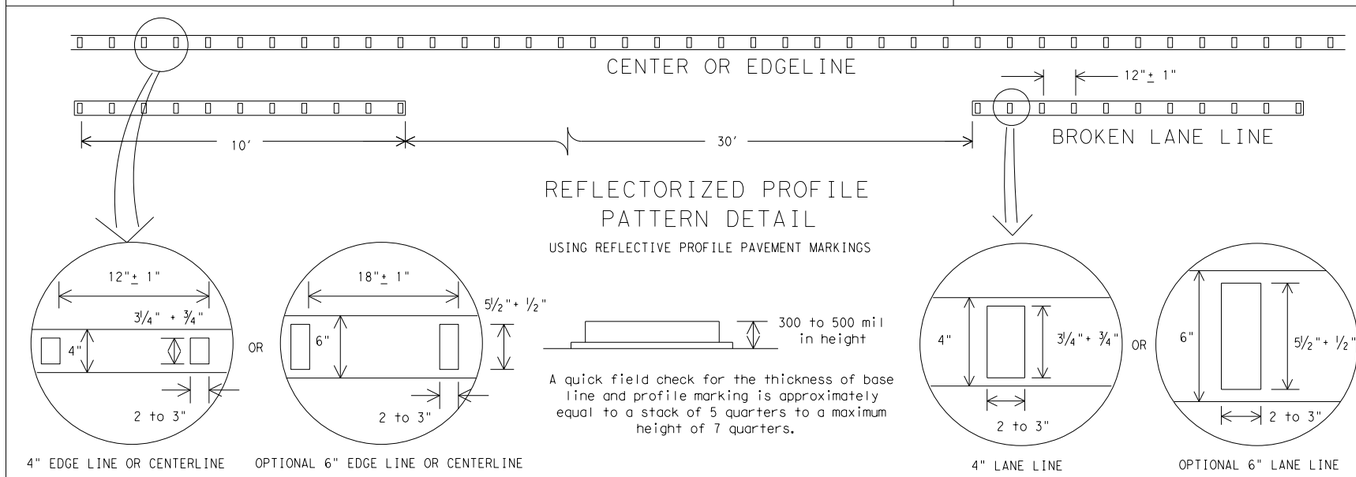

REFLECTORIZED PROFILE PATTERN DETAIL

USING REFLECTIVE PROFILE PAVEMENT MARKINGS

A quick field check for the thickness of base line and profile marking is approximately equal to a stack of 5 quarters to a maximum height of 7 quarters.

4" EDGE LINE OR CENTERLINE — OPTIONAL 6" EDGE LINE OR CENTERLINE — 4" LANE LINE — OPTIONAL 6" LANE LINE

NOTE:

Profile markings shall not be placed on roadways with a posted speed limit of 45 MPH or less.

GENERAL NOTES

1. All raised pavement markers placed in broken lines shall be placed in line with and midway between the stripes.
2. On concrete pavements the raised pavement markers should be placed to one side of the longitudinal joints.

MATERIAL SPECIFICATIONS	
PAVEMENT MARKERS (REFLECTORIZED)	DMS-4200
EPOXY AND ADHESIVES	DMS-6100
BITUMINOUS ADHESIVE FOR PAVEMENT MARKERS	DMS-6130
TRAFFIC PAINT	DMS-8200
HOT APPLIED THERMOPLASTIC	DMS-8220
PERMANENT PREFABRICATED PAVEMENT MARKINGS	DMS-8240

All pavement marking materials shall meet the required Departmental Material Specifications as specified by the plans.

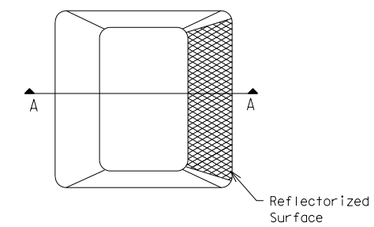

Type I (Top View)

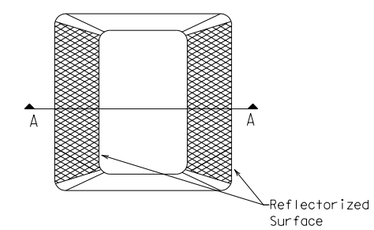

Type II (Top View)

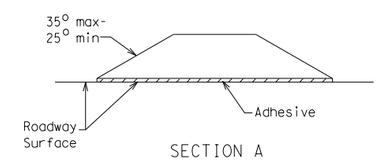

SECTION A

RAISED PAVEMENT MARKERS

Texas Department of Transportation
Traffic Operations Division

POSITION GUIDANCE USING RAISED MARKERS
REFLECTORIZED PROFILE MARKINGS

PM(2)-12

© TxDOT April 1977

DN: TXDOT	CK: TXDOT	DW: TXDOT	CK: TXDOT
CONT	SECT	JOB	HIGHWAY
DIST		COUNTY	SHEET NO.
			276

REVISIONS
4-92 2-10
5-00 2-12
8-00
2-08

22B

DATE:
FILE:

DISCLAIMER: The use of this standard is governed by the "Texas Engineering Practice Act". No warranty of any kind is made by TxDOT for any purpose whatsoever. TxDOT assumes no responsibility for the conversion of this standard to other formats or for incorrect results or damages resulting from its use.

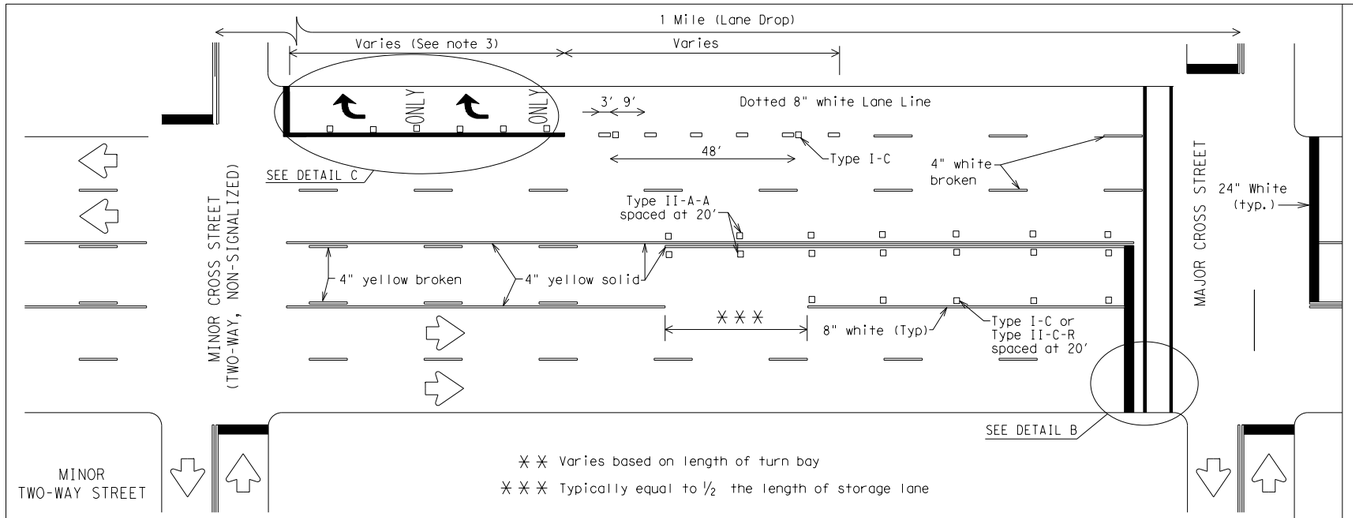

TYPICAL TWLTL AT TWO-WAY CROSS STREET AND RIGHT TURN LANE DROP

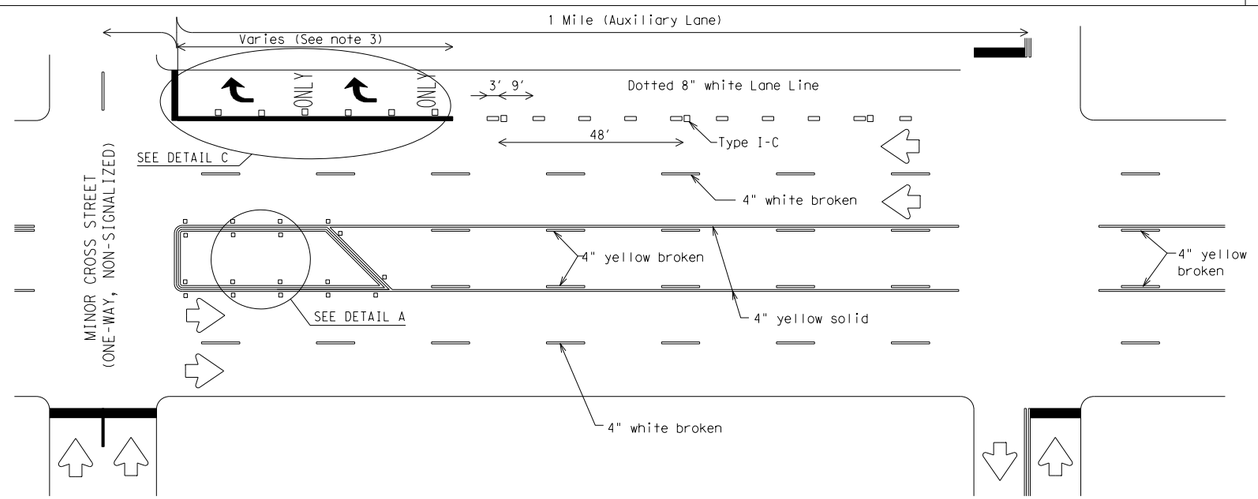

TYPICAL TWLTL AT ONE-WAY STREET AND RIGHT TURN AUXILIARY LANE

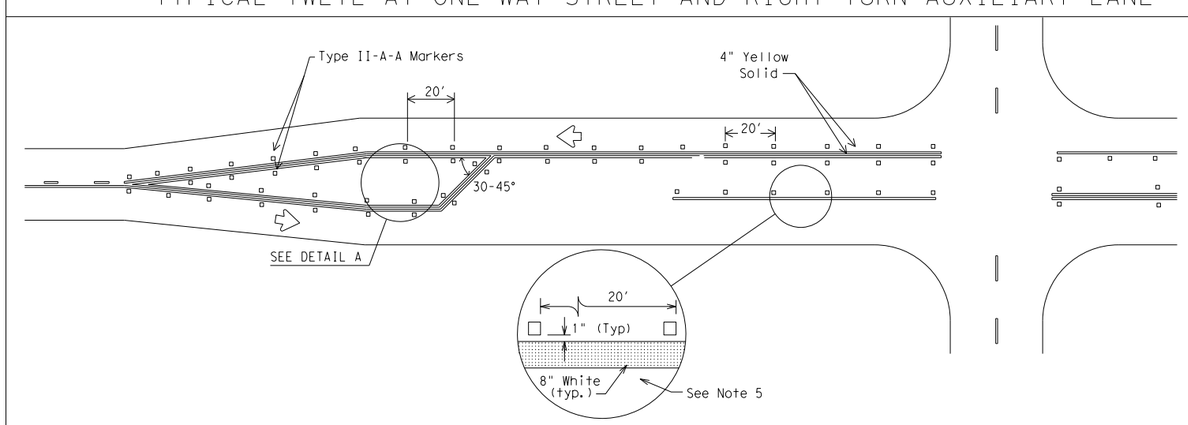

TYPICAL TWO-LANE HIGHWAY INTERSECTION WITH LEFT TURN BAYS

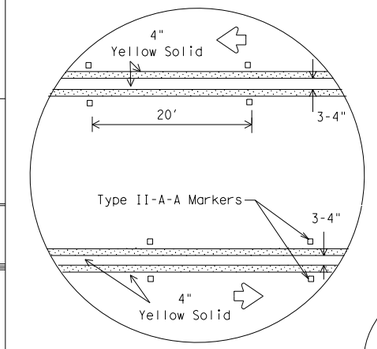

DETAIL A

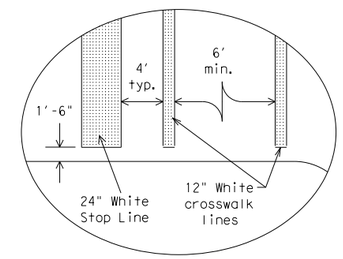

Final placement of Stop Bar and Crosswalk shall be approved by the Engineer in the field.

DETAIL B

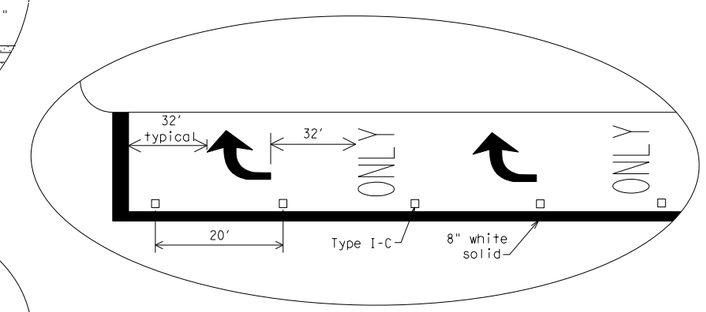

DETAIL C

MATERIAL SPECIFICATIONS	
PAVEMENT MARKERS (REFLECTORIZED)	DMS-4200
EPOXY AND ADHESIVES	DMS-6100
BITUMINOUS ADHESIVE FOR PAVEMENT MARKERS	DMS-6130
TRAFFIC PAINT	DMS-8200
HOT APPLIED THERMOPLASTIC	DMS-8220
PERMANENT PREFABRICATED PAVEMENT MARKINGS	DMS-8240

All pavement marking materials shall meet the required Departmental Material Specifications as specified by the plans.

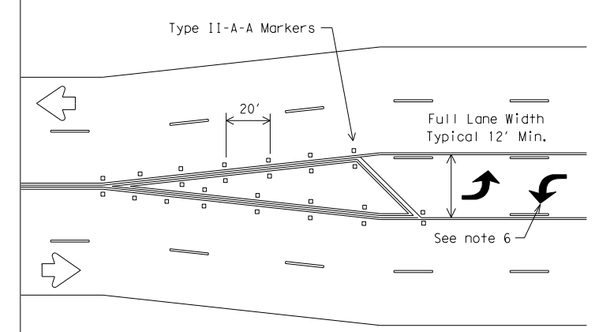

TYPICAL TRANSITION FOR TWLTL AND DIVIDED HIGHWAY

GENERAL NOTES

1. Refer elsewhere in plans for additional RPM placement and details.
2. Lane use word and arrow markings shall be used where through lanes approaching an intersection become mandatory turn lanes. Lane use word and arrow markings should be used in auxiliary lanes of substantial length. Lane use arrow markings or word and arrow markings may be used in other lanes and turn bays for emphasis. Details for words and arrows as shown in the Standard Highway Sign Designs for Texas.
3. When lane used word and arrow markings are used, two sets of arrows should be used if the length of the bay is greater than 180 feet. When a single lane use arrow or word and arrow marking is used for a short turn lane, it should be located at or near the upstream end of the full-width turn lane.
4. Other crosswalk paterns as shown in the "Texas Manual on Uniform Traffic Control Devices" may be used.
5. Raised pavement marker Type I-C with undivided highways, flush medians and two way left turn lanes. Raised pavement marker Type II-C-R with divided highways and raised medians.
6. A two-way left-turn (TWLT) lane-use arrow pavement marking should be used at or just downstream from the beginning of a two-way left-turn lane within a corridor. Repeating the marking after each intersection or dedicated turn bay is not required unless stated elsewhere in the plans.

Texas Department of Transportation
Traffic Operations Division

PAVEMENT MARKINGS FOR TWO-WAY LEFT TURN LANES DIVIDED HIGHWAYS AND RURAL LEFT TURN BAYS

PM(3)-12

© TxDOT April 1998

REVISIONS		DN: TXDOT	CK: TXDOT	DW: TXDOT	CK: TXDOT
5-00	2-12	CONT	SECT	JOB	HIGHWAY
8-00					
3-03		DIST		COUNTY	SHEET NO.
2-10					277

22C

DATE:
FILE:

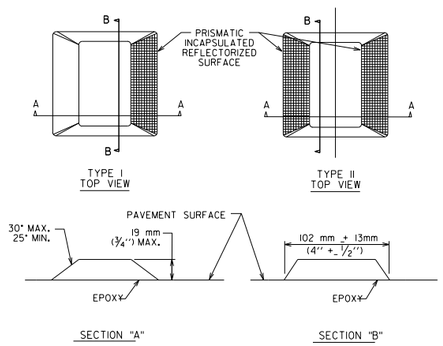

NOTE:

MINIMUM AREA OF MARKER EXPOSED TO TRAFFIC SHALL NOTE BE LESS THAN 8000 SQUARE MILLIMETERS (12.5 SQUARE INCHES).

CITY OF AUSTIN DEPARTMENT OF PUBLIC WORKS		PAVEMENT MARKERS (REFLECTORIZED - TYPE I & II)	
RECORD COPY SIGNED BY LINO RIVERA	9/29/99 ADOPTED	THE ARCHITECT/ENGINEER ASSUMES RESPONSIBILITY FOR APPROPRIATE USE OF THIS STANDARD.	STANDARD NO. 863S-1

NUMBER	DATE	REVISION	APPROVED

CEDAR PARK

Binkley & Barfield, Inc
consulting engineers
Texas Registration Number F-257

ANDERSON MILL ROAD
GASPAR BEND TO WHITESTONE BLVD
STANDARD DETAILS
PAVEMENT MARKINGS

DESIGN BY: GCC DRAWN BY: DSH CHECKED BY: DRE APPROVED BY: BDR PROJECT NO: 156402 DATE: 10/6/2016	SCALE:N/A	
	SHEET:	
	PAGE: 278	

10/6/2016
8:51:53 AM
...\CADD\SHEETS\PMSD1*AM*04.dgn

REFLECTOR UNIT SIZES FOR DELINEATORS AND OBJECT MARKERS

	SIZE 1	SIZE 2	SIZE 3	SIZE 4
DEVICE	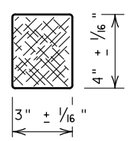	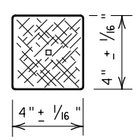	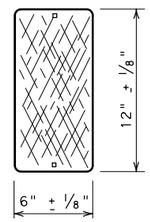	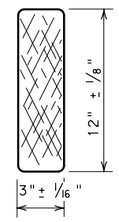
SHEETING	Yellow, White or Red Type B or C reflective sheeting			
NOTE	1. Size 1 and 4 - Direct applied reflective sheeting for use on flexible post (flx). 2. Size 2 and 3 - For use on wing channel (wc) post only. Use approved metal, plastic or fiberglass backplate with 17/64" mounting holes.			

DELINEATORS

	SINGLE		DOUBLE	
DEVICE	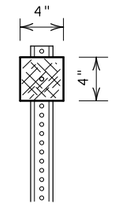	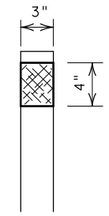	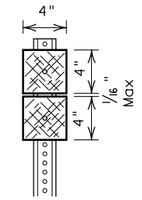	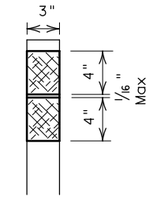
	1-Size 2 reflector unit	1-Size 1 reflector unit	2-Size 2 reflector units	2-Size 1 reflector units
SHEETING	Yellow, White or Red Type B or C Reflective Sheeting			
POST TYPE	WC	FLX	WC	FLX
MOUNT TYPE	GND	GND, SRF	GND	GND, SRF

D & OM DESCRIPTIVE CODES

INSTL DEL ASSM (D-XX)SZ X (XXX)XXX(XX)

NUMBER OF REFLECTORS
- S = Single
- D = Double

COLOR OF REFLECTORS
- W = White
- Y = Yellow
- R = Red

REFLECTOR UNIT SIZE
- 1 or 2

TYPE OF POST OR DELINEATOR
- WC = Wing Channel Post
- FLX = Flexible Post
- BRF = Barrier Reflector

TYPE OF MOUNT
- GND = Embedded (drivable or set in concrete)
- CTB = Concrete Barrier Mount
- GF1 or GF2 = Guard Fence Attachment
- SRF = Surface Mount

DIRECTION
- If Required
- BI = Bi-Directional
- BR = Bi-Directional with red on back

INSTL OM ASSM (OM-XX) (XXX)XXX(XX)

TYPE OF OBJECT MARKER
- 1, 2, 3, or 4

NUMBER OF REFLECTORS OR DIRECTION
- X = 3-Size 2 reflector units (Type 2 only)
- Y = 1-Size 3 reflector unit (Type 2 only)
- Z = 3-Size 1 or 1-Size 4 reflector unit(s)(Type 2 only)
- L = Left Side (Type 3 Object Marker only)
- R = Right Side (Type 3 Object Marker only)
- C = Center (Type 3 Object Marker only)

TYPE OF POST
- WC = Wing Channel Post
- FLX = Flexible Post
- TWT = Thin Walled Tubing

TYPE OF MOUNT
- GND = Embedded (drivable)
- SRF = Surface Mount
- WAS = Wedge Anchor Steel
- WAP = Wedge Anchor Plastic

DIRECTION
- If Required
- BI = Bi-Directional

OBJECT MARKERS

	Type 1 (OM-1)	Type 2 (OM-2)			Type 3 (OM-3)			Type 4 (OM-4)
	OM-1	OM-2X	OM-2Y	OM-2Z	OM-3L	OM-3R	OM-3C	OM-4
DEVICE	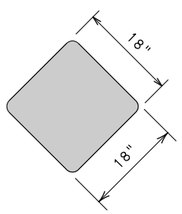	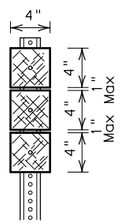	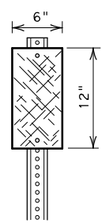	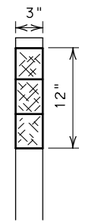	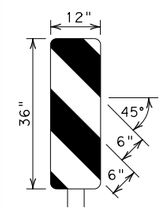	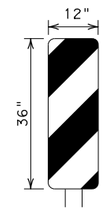	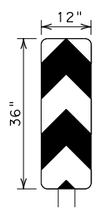	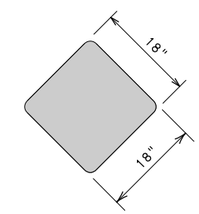
		3-Size 2 reflector units	1-Size 3 reflector unit	3-Size 1 reflector units or 1-Size 4 reflector unit				
SHEETING	Yellow-Type B_{FL} or C_{FL} Sheeting	Yellow - Type B or C Sheeting			Alternating acrylic black and retroflective yellow - Type B_{FL} or C_{FL} Sheeting			Red -Type B_{FL} or C_{FL} Sheeting
POST TYPE	TWT	WC	WC	FLX	TWT			TWT
MOUNT TYPE	WAS, WAP	GND	GND	GND, SRF	WAS, WAP			WAS, WAP

DEPARTMENTAL MATERIAL SPECIFICATIONS

FLEXIBLE DELINEATOR & OBJECT MARKER POSTS (EMBEDDED & SURFACE MOUNT TYPES)	DMS-4400
SIGN FACE MATERIALS	DMS-8300
DELINEATORS, OBJECT MARKERS AND BARRIER REFLECTORS	DMS-8600

BARRIER REFLECTORS (BRF)

	GF1	GF2	CTB
DEVICE	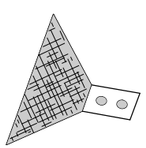		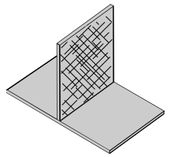
	1. Barrier reflectors shall meet the requirements of DMS 8600. 2. Approved Barrier Reflectors are listed on the "Barrier Reflectors" Material Producer List at: www.txdot.gov.		
SHEETING	Yellow, White, Red		
NOTE	1. Minimum 9 square inches of reflective sheeting surface area.		

CHEVRONS

DEVICE

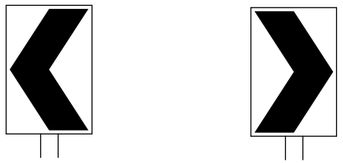

W1-8

SIZE (W x L)	18"x 24" (Conventional)	24"x 30" (Conventional Oversize)	30"x 36" (Expressway)	36" x 48" (Freeway)
MOUNTING HEIGHT	4'-0" or 7'-0"		7'-0" Only	
NOTE	1. CHEVRON (W1-8) signs and ONE DIRECTION LARGE ARROW (W1-6) Signs shall be installed per Sign Mounting Details (SMD) Standard Sheets and paid under Item 644 (Small Roadside Sign Assemblies). 2. The Texas version of the ONE DIRECTION LARGE ARROW sign (W1-9T) may be used instead of the ONE DIRECTIONAL LARGE ARROW (W1-6).			

ONE DIRECTION LARGE ARROW

DEVICE

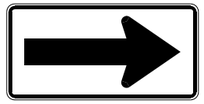

W1-6

SIZE (W x L)	48" x 24" (Conventional)	60" x 30" (Expressway & Freeway)
MOUNTING HEIGHT	7'-0"	

NOTE:

Delineator and object marker backplates and sign substrates shall be 0.080" Aluminum sign blank to conform to ASTM B-209 Alloy 6061-T6 or approved alternative.

Texas Department of Transportation — Traffic Operations Division Standard

DELINEATOR & OBJECT MARKER MATERIAL DESCRIPTION

D & OM(1)-15

FILE: dom1-15.dgn	DN: TXDOT	CK: TXDOT	DW: TXDOT	CK: TXDOT
©TxDOT August 2004	CONT	SECT	JOB	HIGHWAY
REVISIONS 10-09 3-15 4-10	DIST	COUNTY		SHEET NO. 279

20A

DISCLAIMER:
The use of this standard is governed by the "Texas Engineering Practice Act". No warranty of any kind is made by TxDOT for any purpose whatsoever. TxDOT assumes no responsibility for the conversion of this standard to other formats or for incorrect results or damages resulting from its use.

DATE: 10/6/2016 8:51:53 AM
FILE: ...\CADD\SHEETS\RDSD1_AM_15.DGN

POST TYPE AND SUPPORT FOUNDATION DETAILS

WING CHANNEL (WC)

GND

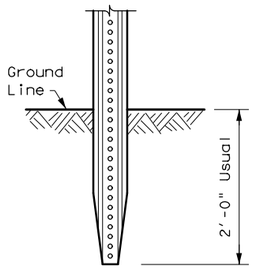

NOTES

1. Embedded Wing Channel (WC) post option may be used for Type 2 Object Markers and Delineators only.
2. 1.12 lbs/ft steel per ASTM A 1011 SS Gr. 50, or ASTM A499.

FLEXIBLE POSTS (FLX)

GND

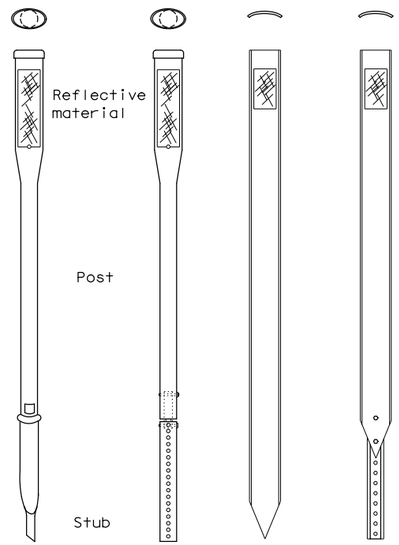

EMBEDDED

SRF

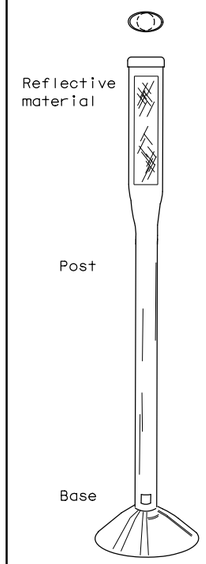

SURFACE MOUNT

NOTES

1. See "Flexible Delineator and Object Marker Posts" Material Producer List for approved devices.
2. Install per manufacturer's recommendations.
3. Post length may vary to meet field conditions.

WEDGE ANCHOR SYSTEMS

WAS

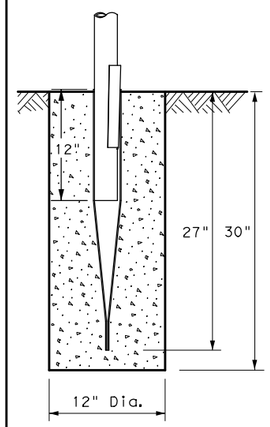

STEEL

WAP

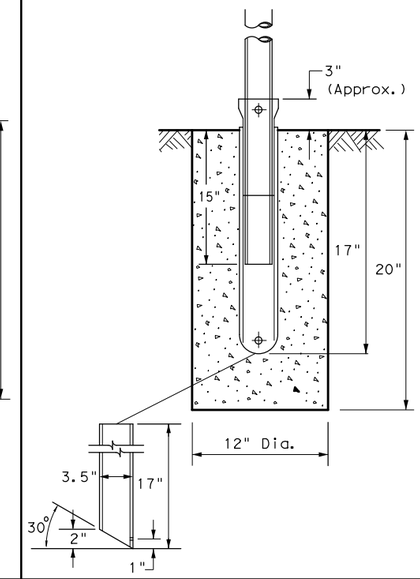

PLASTIC

NOTE

1. Install per manufacturer's recommendations.

TYPE OF BARRIER MOUNTS

GUARD FENCE ATTACHMENT

GF1

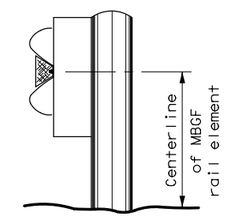

GF2

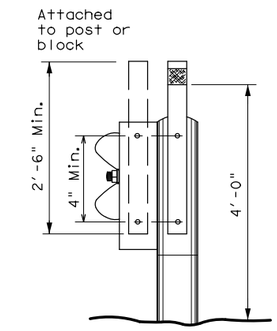

CONCRETE BARRIER / BRIDGE RAIL

CTB

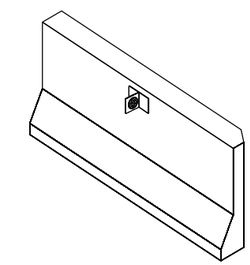

GENERAL NOTES

1. Place delineators on a section of roadway at a consistent distance from the edge of pavement.
2. Where a restriction prevents consistent placement from the pavement edge, place the affected object markers in line with the innermost edge of the obstruction.
3. When Type 2 object markers and delineators are more than 8'-0" from the edge of the pavement, it may not be possible to maintain a height of approximately 4'-0". If this is the case, place the object marker or delineator as close to the desired height as possible.
4. Install all delineators, object markers and barrier reflectors in accordance with the manufacturer's recommendation.
5. Barrier reflectors should be installed a minimum of 18 inches above the edge of the pavement surface.

TYPES 1, 3, AND 4 OBJECT MARKERS AND CHEVRONS

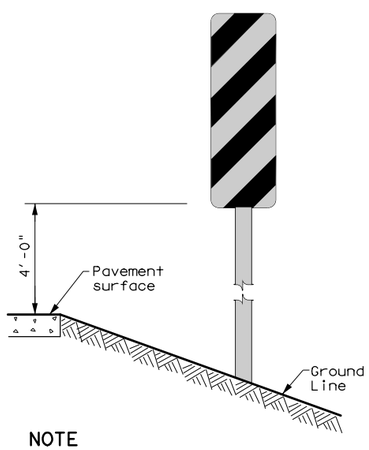

NOTE

Mounting at 4 feet to the bottom of the chevron is permitted for chevrons that will not exceed a height of 6'-6" to the top of the chevron (sizes 24" x 30" and smaller)

CHEVRONS AND ONE DIRECTION LARGE ARROW SIGN

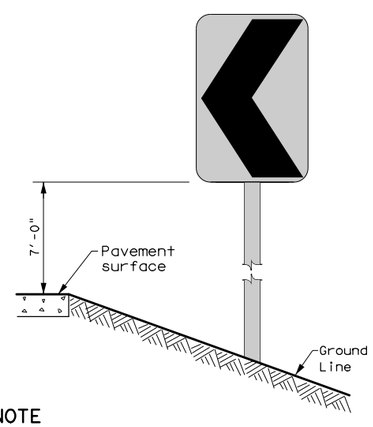

NOTE

Chevrons 30" x 36" and larger shall be mounted at a height of 7' to the bottom of the chevron. Chevron sign and ONE DIRECTIONAL LARGE ARROW sign (W1-9T) shall be installed per SMD standard sheets and paid under item 644.

DELINEATORS AND TYPE 2 OBJECT MARKERS

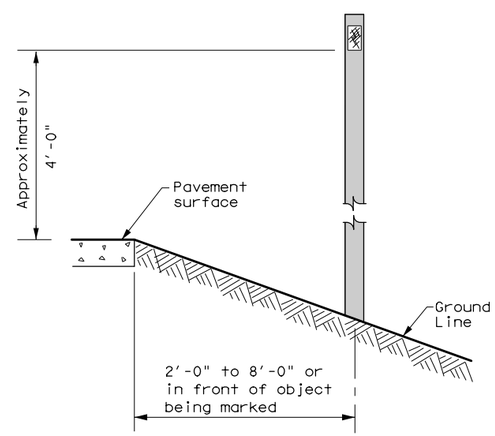

See general notes 1, 2 and 3.

Texas Department of Transportation

Traffic Operations Division Standard

DELINEATOR & OBJECT MARKER INSTALLATION

D & OM(2)-15

FILE: dom2-15.dgn	DN: TXDOT	CK: TXDOT	DW: TXDOT	CK: TXDOT
© TxDOT August 2004	CONT	SECT	JOB	HIGHWAY
REVISIONS				
10-09 3-15				
4-10				280

20B

DISCLAIMER:
The use of this standard is governed by the "Texas Engineering Practice Act". No warranty of any kind is made by TxDOT for any purpose whatsoever. TxDOT assumes no responsibility for the conversion of this standard to other formats or for incorrect results or damages resulting from its use.

DATE: 10/6/2016 9:04:05 AM
FILE: ...\CADD\SHEETS\ROSD1_AM_16.DGN

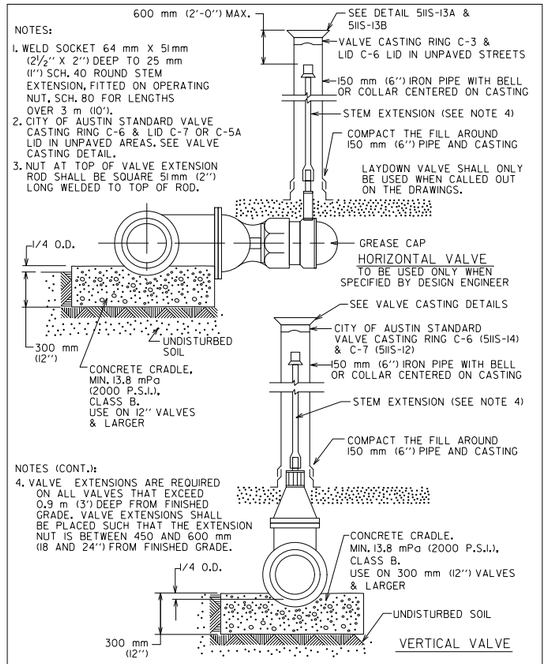

NOTES:

1. WELD SOCKET 64 mm X 51mm (2½" X 2") DEEP TO 25 mm (1") SCH. 40 ROUND STEM EXTENSION, FITTED ON OPERATING NUT. SCH. 80 FOR LENGTHS OVER 3 m (10').
2. CITY OF AUSTIN STANDARD VALVE CASTING RING C-6 & LID C-7 OR C-5A LID IN UNPAVED AREAS. SEE VALVE CASTING DETAIL.
3. NUT AT TOP OF VALVE EXTENSION ROD SHALL BE SQUARE 51mm (2") LONG WELDED TO TOP OF ROD.

NOTES (CONT.):

4. VALVE EXTENSIONS ARE REQUIRED ON ALL VALVES THAT EXCEED 0.9 m (3') DEEP FROM FINISHED GRADE. VALVE EXTENSIONS SHALL BE PLACED SUCH THAT THE EXTENSION NUT IS BETWEEN 450 AND 600 mm (18 AND 24") FROM FINISHED GRADE.

CITY OF AUSTIN AUSTIN WATER UTILITY		TYPICAL GATE VALVE 100 mm-600 mm (4"-24")	
RECORD COPY SIGNED BY KATHI L. FLOWERS	3/9/04 ADOPTED	THE ARCHITECT/ENGINEER ASSUMES RESPONSIBILITY FOR APPROPRIATE USE OF THIS STANDARD.	STANDARD NO. 511S-7

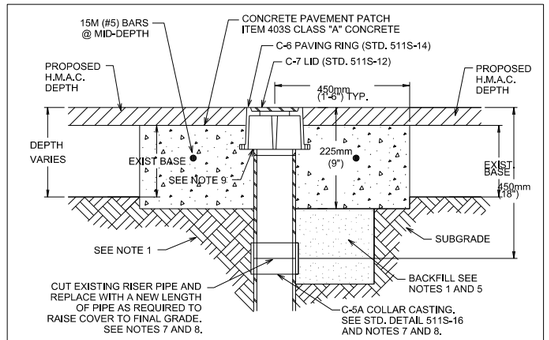

SECTION B-B

NOTES:

1. SUB-GRADE SHALL BE COMPACTED AS PER ITEM 201S, SUB-GRADE PREPARATION.
2. VALVE CASTINGS SHALL BE ADJUSTED TO GRADE AFTER FINAL LIFT OF OVERLAY IS IN PLACE.
3. CLEAN VALVE BOX OF ALL DEBRIS DOWN TO THE NUT OF THE VALVE; NUT SHALL OPERATE WITH NO OBSTRUCTION.
4. REMOVE EXISTING RISER PIPE DOWN 450mm (18") AND REPLACE TO THE NEW ELEVATION USING NEW PIPE AND A C-5A CASTING.
5. WHERE CAST IRON CASTINGS TO BE REMOVED REQUIRE EXCAVATION GREATER THAN 500mm (20") DEEP, CONTRACTOR MAY ELECT TO FILL EXCAVATION WITH CONTROLLED LOW STRENGTH MATERIAL (SPEC. ITEM 402S) TO THE UNDERSIDE OF THE CONCRETE PAVEMENT PATCH IN LIEU OF COMPACTED BACKFILL.
6. REINFORCING STEEL SHALL MEET SPEC. ITEM 406S.
7. NO MORE THAN 2 SECTIONS OF PIPE SHALL BE USED FROM VALVE TO FINAL GRADE.
8. BELL AND SPIGOT IS ACCEPTABLE FOR DEPTH OVER 5.5m (18')
9. PAVING RING SHALL SIT FLUSH ON RISER.

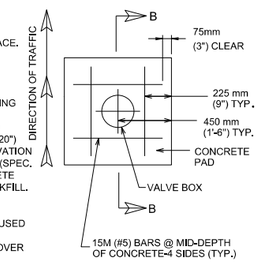

PLAN VIEW

CITY OF AUSTIN AUSTIN WATER UTILITY		WATER VALVE BOX ADJUSTMENT TO GRADE W/CONCRETE AND H.M.A.C.	
RECORD COPY SIGNED BY KATHI L FLOWERS	08/31/2011	THE ARCHITECT/ENGINEER ASSUMES RESPONSIBILITY FOR APPROPRIATE USE OF THIS STANDARD.	STANDARD NO. 511S-13B

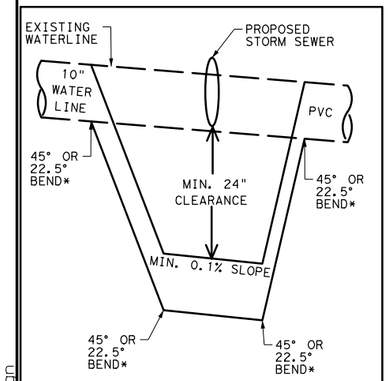

* TO BE DETERMINED IN FIELD

STORM SEWER CONFLICT

NOTES:

1. CONTRACTOR SHALL USE RESTRAINED JOINTS.
2. CONTRACTOR SHALL VERIFY EXISTING 10" WATER LINE ELEVATION & LOCATION PRIOR TO ADJUSTMENT. THE CONTRACTOR SHALL OBTAIN WRITTEN APPROVAL FROM THE CITY'S REPRESENTATIVE PRIOR TO CONSTRUCTION.
3. SHUT-OUT TO BE COORDINATED WITH CITY OF CEDAR PARK WATER.

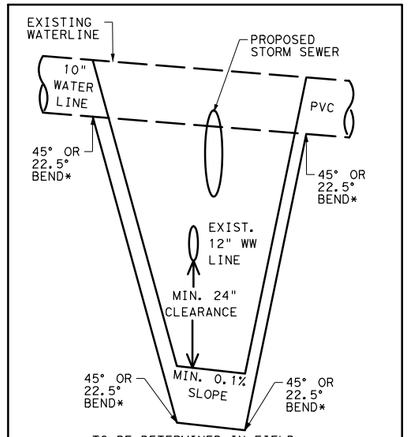

* TO BE DETERMINED IN FIELD

WASTEWATER CONFLICT

STA. 176+64.39

NOTES:

1. CONTRACTOR SHALL USE RESTRAINED JOINTS.
2. CONTRACTOR SHALL VERIFY EXISTING 10" WATER LINE ELEVATION & LOCATION PRIOR TO ADJUSTMENT. THE CONTRACTOR SHALL OBTAIN WRITTEN APPROVAL FROM THE CITY'S REPRESENTATIVE PRIOR TO CONSTRUCTION.
3. SHUT-OUT TO BE COORDINATED WITH CITY OF CEDAR PARK WATER.
4. WASTEWATER PIPE SHALL BE ENCASED ACCORDING TO THE TEXAS ADMINISTRATIVE CODE - 30 TAC, RULE 217.53 (5)(A).
5. ONE JOINT OF WATER PIPE SHALL BE CENTERED BELOW WASTEWATER LINE.

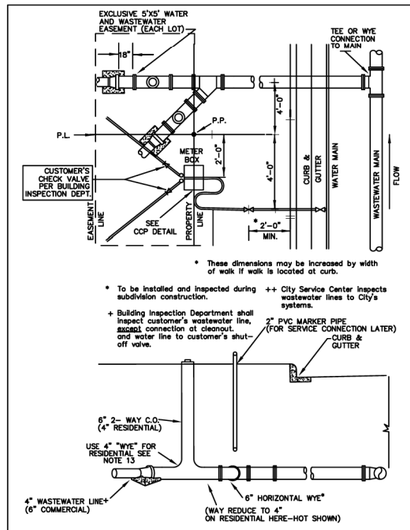

CITY OF CEDAR PARK	STANDARD CONNECTION DETAIL FOR WASTE WATER SERVICE	
ENGINEERING DEPARTMENT	ADOPTED: 9-11-08	
	SCALE: NTS	
	INITIAL: DRM	

1. UTILITY CONTRACTOR LEAVE ONE 6" HORIZONTAL WYE AS SHOWN FOR DOUBLE SERVICE CONNECTION-OPENINGS PLUGGED. FOR DOUBLE SERVICE AND NEW INSTALLS OF METER BOX, WATER PIPE, FITTINGS AND VALVE TO INLET SIDE OF METER(S) IN ACCORDANCE WITH INFORMATION SHOWN ON APPLICABLE STANDARD DETAIL SHEET. INSTALLATION TO BE COMPLETED DURING SUBDIVISION CONSTRUCTION-INSPECTION BY WATER AND WASTEWATER CONSTRUCTION INSPECTION PERSONNEL.

2. CUSTOMER IS RESPONSIBLE FOR METER BOX AND PIPING SYSTEMS UNTIL METER IS INSTALLED AND WASTEWATER IS CONNECTED. ANY MISSING OR DAMAGED PARTS SHALL BE REINSTALLED BY CUSTOMER WHO SHALL GUARANTEE, FOR A PERIOD OF ONE (1) YEAR FROM DATE OF ACCEPTANCE, THAT CONNECTIONS TO CITY SYSTEMS ARE FREE FROM DEFECTS IN WORKMANSHIP OR MATERIALS. CUSTOMER HAS THE RESPONSIBILITY TO ASSURE THAT ALL VALVES AND STOPS, METER BOX AND VERTICAL WYE REMAIN CLEAR OF SIDEWALKS AND OTHER OBSTRUCTIONS

3. CITY OF CEDAR PARK ACTIVITY IS LIMITED TO INSTALLATION OF THE WATER METER AND INSPECTION OF CONNECTIONS TO THE CITY'S WATER AND WASTEWATER SYSTEMS FOR MAINTENANCE PURPOSES, THE CITY'S RESPONSIBILITY ENDS AT THE METER BOX AND AT THE WASTEWATER CONNECTION TO THE HORIZONTAL WYE.

4. ALL WASTEWATER SERVICE LATERALS SHALL SLOPE 1 PERCENT (1/8 INCH PER FOOT) MINIMUM TO MAIN.

5. PIPING IN STREET RIGHT-OF-WAY AND IN EASEMENT AREAS SHALL BE BEDDED WITH MATERIALS REQUIRED BY CITY OF AUSTIN SPECIFICATIONS; AND TO HAVE A MINIMUM COVER BELOW FINAL GRADE OF 42 INCHES. THE ENGINEERING DEPARTMENT MUST SPECIFICALLY APPROVE ANY EXCEPTION.

6. CUSTOMER TO PROVIDE CLEANOUT WITHIN 5' P.U.E.

7. CONTRACTOR SHALL PROVIDE ALL MATERIALS & LABOR UNLESS DIRECTED OTHERWISE BY THE CITY UTILITY INSPECTOR.

8. FOR COMMERCIAL SITES, COORDINATE ALL W/WW TAPS WITH UTILITY INSPECTOR. 512-401-5550.

9. DO NOT USE DOUBLE WYE OR 4"X6"X4" WYE. SINGLE SERVICES SHALL NOT HAVE ANY WYE INSTALLED.

10. ALL WW FITTINGS UPSTREAM OF THE SERVICE LATERAL FROM THIS POINT TO BE SOLVENT WELD. DO NOT USE GASKET-TYPE OR PUSH ON FITTINGS FOR SERVICE LATERALS.

11. GENERAL CONTRACTOR/HOME OR COMMERCIAL BUILDER/PLUMBER SHALL INSTALL AND MAINTAIN A PLUG ON THE CITY SIDE OF THE SERVICE LATERAL AT ALL TIMES UNTIL FINISHED DEVELOPMENT IS APPROVED AND CONNECTED TO THE WASTEWATER SYSTEM.

12. FOR COMMERCIAL PROJECTS, THE 6" 2-WAY CLEAN OUT WILL BE CONSIDERED THE INSPECTION PORTAL AND CONTROL POINT FOR THE PROPERTY. HOWEVER, THE INDUSTRIAL PRE-TREATMENT PROGRAM HAS THE AUTHORITY TO REQUIRE ADDITIONAL CONTROL POINTS AND ADDITIONAL LOCATIONS AS REQUIRED BY ARTICLE 18.06.

13. RESIDENTIAL TO USE 4"(MIN) VERTICAL WYE FITTING FACING THE MAIN IN PLACE OF THE 6" 2-WAY CO REQUIRED BY THE IPT PROGRAM AND COMMERCIAL CODE.

NUMBER	DATE	REVISION	APPROVED

CEDAR PARK

Binkley & Barfield, Inc
consulting engineers
Texas Registration Number F-257

ANDERSON MILL ROAD

GASPAR BEND TO WHITESTONE BLVD

STANDARD DETAILS WATER DETAILS

DESIGN BY: BLJ		SCALE: NTS
DRAWN BY: BLJ		
CHECKED BY: DRE		
APPROVED BY: RG		SHEET:
PROJECT NO: 156402		
DATE: 10/6/2016		PAGE: 281

10/6/2016
8:51:55 AM
...\CADD\SHEETS\RDWA1*AM*01.dgn

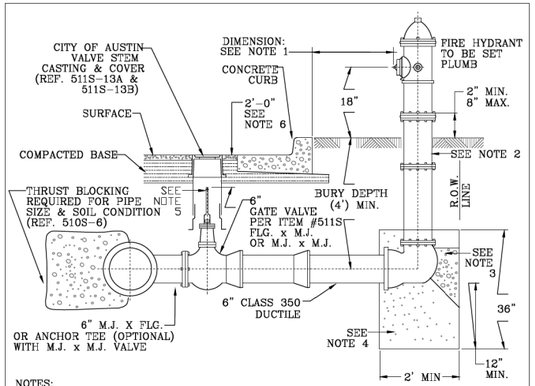

NOTES:

1. IN RIGHT OF WAY AREAS, PLACE FH AT ROW LINE. HYDRANTS ARE NOT TO BE PLACED IN SIDEWALK AREAS OR WITHIN 6' OF A CURB. WHERE POSSIBLE, PLACE VALVE IN PAVEMENT. IF NOT POSSIBLE, PLACE A VALVE BOX PAD (DETAIL FROM CP WEBSITE) AROUND VALVE. NO VALVES ARE TO BE PLACED IN CONFLICT WITH PROPOSED/EXISTING CURBS OR GUTTERS.
2. FOR BURY DEPTHS GREATER THAN 5', ONE BARREL EXTENSION NOT EXCEEDING 2 FOOT IN LENGTH SHALL BE INSTALLED DIRECTLY BELOW THE FIRE HYDRANT.
3. ALL PIPE AND FITTINGS SHALL HAVE JOINT RESTRAINT FROM MAIN TO FIRE HYDRANT, ALL INCLUSIVE. THRUST BLOCKING SHALL BE CLASS A CONCRETE WITH A MINIMUM 1.5 SQUARE FOOT SURFACE AREA AGAINST PIPE. DO NOT BLOCK DRAIN HOLES.
4. CRUSHED STONE OR GRAVEL SHALL BE PLACED AROUND THE BOTTOM OF THE HYDRANT FOR A RADIUS OF AT LEAST 12" AND EXTEND AT LEAST 12" ABOVE THE OUTLET. DO NOT BLOCK DRAIN HOLES.
5. WELD SOCKET 2-½" X 2" DEEP TO 1" SCH. 40 ROUND STEM EXTENSION, FITTED ON OPERATING NUT, SCH. 80 FOR LENGTHS OVER 10'.
6. VALVE EXTENSIONS ARE REQUIRED ON ALL VALVES THAT EXCEED 3' DEEP FROM FINISHED GRADE. VALVE EXTENSIONS SHALL BE PLACED SUCH THAT THE EXTENSION NUT IS BETWEEN 18" AND 24" FROM FINISHED GRADE.
7. VALVE SPECIFICATION PER CITY OF AUSTIN STANDARD SPECIFICATION ITEM NO. 511.

CITY OF CEDAR PARK	STANDARD FIRE HYDRANT INSTALLATION	
ISSUED: JANUARY 28, 2005	THE ENGINEER ASSUMES RESPONSIBILITY FOR APPROPRIATE USE OF THIS STANDARD.	

NUMBER	DATE	REVISION	APPROVED

CEDAR PARK

Binkley & Barfield, Inc
consulting engineers
Texas Registration Number F-257

ANDERSON MILL ROAD

GASPAR BEND TO WHITESTONE BLVD

STANDARD DETAILS WATER DETAILS

DESIGN BY:	BLJ	SCALE: NTS
DRAWN BY:	BLJ	
CHECKED BY:	DRE	
APPROVED BY:	RG	SHEET:
PROJECT NO:	156402	
DATE:	10/6/2016	PAGE: 282

10/6/2016
8:51:58 AM
...\CADD\SHEETS\RDWA1*AM*02.dgn

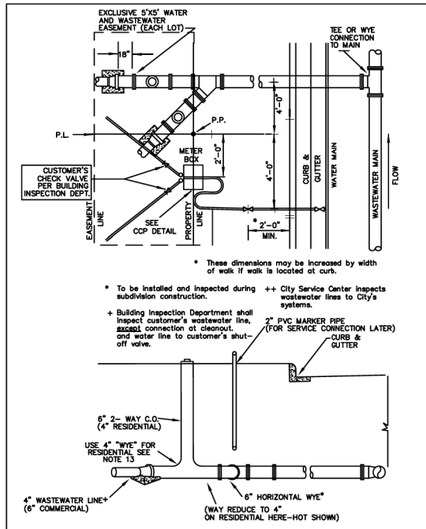

CITY OF CEDAR PARK	STANDARD CONNECTION DETAIL FOR WASTE WATER SERVICE
ENGINEERING DEPARTMENT	ADOPTED: 9-11-08 SCALE: NTS INITIAL: DRM

1. UTILITY CONTRACTOR LEAVE ONE 6" HORIZONTAL WYE AS SHOWN FOR DOUBLE SERVICE CONNECTION-OPENINGS PLUGGED. FOR DOUBLE SERVICE AND NEW INSTALLS OF METER BOX, WATER PIPE, FITTINGS AND VALVE TO INLET SIDE OF METER(S) IN ACCORDANCE WITH INFORMATION SHOWN ON APPLICABLE STANDARD DETAIL SHEET. INSTALLATION TO BE COMPLETED DURING SUBDIVISION CONSTRUCTION-INSPECTION BY WATER AND WASTEWATER CONSTRUCTION INSPECTION PERSONNEL.

2. CUSTOMER IS RESPONSIBLE FOR METER BOX AND PIPING SYSTEMS UNTIL METER IS INSTALLED AND WASTEWATER IS CONNECTED. ANY MISSING OR DAMAGED PARTS SHALL BE REINSTALLED BY CUSTOMER WHO SHALL GUARANTEE, FOR A PERIOD OF ONE (1) YEAR FROM DATE OF ACCEPTANCE, THAT CONNECTIONS TO CITY SYSTEMS ARE FREE FROM DEFECTS IN WORKMANSHIP OR MATERIALS. CUSTOMER HAS THE RESPONSIBILITY TO ASSURE THAT ALL VALVES AND STOPS, METER BOX AND VERTICAL WYE REMAIN CLEAR OF SIDEWALKS AND OTHER OBSTRUCTIONS

3. CITY OF CEDAR PARK ACTIVITY IS LIMITED TO INSTALLATION OF THE WATER METER AND INSPECTION OF CONNECTIONS TO THE CITY'S WATER AND WASTEWATER SYSTEMS FOR MAINTENANCE PURPOSES, THE CITY'S RESPONSIBILITY ENDS AT THE METER BOX AND AT THE WASTEWATER CONNECTION TO THE HORIZONTAL WYE.

4. ALL WASTEWATER SERVICE LATERALS SHALL SLOPE 1 PERCENT (1/8 INCH PER FOOT) MINIMUM TO MAIN.

5. PIPING IN STREET RIGHT-OF-WAY AND IN EASEMENT AREAS SHALL BE BEDDED WITH MATERIALS REQUIRED BY CITY OF AUSTIN SPECIFICATIONS; AND TO HAVE A MINIMUM COVER BELOW FINAL GRADE OF 42 INCHES. THE ENGINEERING DEPARTMENT MUST SPECIFICALLY APPROVE ANY EXCEPTION.

6. CUSTOMER TO PROVIDE CLEANOUT WITHIN 5' P.U.E.

7. CONTRACTOR SHALL PROVIDE ALL MATERIALS & LABOR UNLESS DIRECTED OTHERWISE BY THE CITY UTILITY INSPECTOR.

8. FOR COMMERCIAL SITES, COORDINATE ALL W/WW TAPS WITH UTILITY INSPECTOR. 512-401-5550.

9. DO NOT USE DOUBLE WYE OR 4"X6"X4" WYE. SINGLE SERVICES SHALL NOT HAVE ANY WYE INSTALLED.

10. ALL WW FITTINGS UPSTREAM OF THE SERVICE LATERAL FROM THIS POINT TO BE SOLVENT WELD. DO NOT USE GASKET-TYPE OR PUSH ON FITTINGS FOR SERVICE LATERALS.

11. GENERAL CONTRACTOR/HOME OR COMMERCIAL BUILDER/PLUMBER SHALL INSTALL AND MAINTAIN A PLUG ON THE CITY SIDE OF THE SERVICE LATERAL AT ALL TIMES UNTIL FINISHED DEVELOPMENT IS APPROVED AND CONNECTED TO THE WASTEWATER SYSTEM.

12. FOR COMMERCIAL PROJECTS, THE 6" 2-WAY CLEAN OUT WILL BE CONSIDERED THE INSPECTION PORTAL AND CONTROL POINT FOR THE PROPERTY. HOWEVER, THE INDUSTRIAL PRE-TREATMENT PROGRAM HAS THE AUTHORITY TO REQUIRE ADDITIONAL CONTROL POINTS AND ADDITIONAL LOCATIONS AS REQUIRED BY ARTICLE 18.06.

13. RESIDENTIAL TO USE 4"(MIN) VERTICAL WYE FITTING FACING THE MAIN IN PLACE OF THE 6" 2-WAY CO REQUIRED BY THE IPT PROGRAM AND COMMERCIAL CODE.

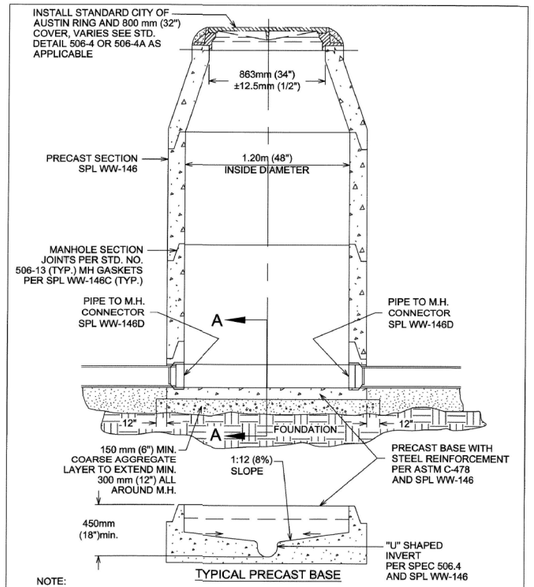

NOTE:
1. THE MANHOLE BASE SHALL BE BEDDED ON 150 mm (6") COARSE AGGREGATE. THE CONTRACTOR SHALL LEVEL AND PLUMB THE BASE PRIOR TO SETTING THE PRECAST MANHOLE RISER SECTIONS ON THE PRECAST CONCRETE BASE.
2. MH FOUNDATION SHALL MEET OR EXCEED STD. SPEC. 506.5B.

CITY OF AUSTIN AUSTIN WATER UTILITY	WASTEWATER MANHOLE ON PRECAST BASE	
Kathi L Flowers 8/31/2011	THE ARCHITECT/ENGINEER ASSUMES RESPONSIBILITY FOR APPROPRIATE USE OF THIS STANDARD	STANDARD NO. 506S-10

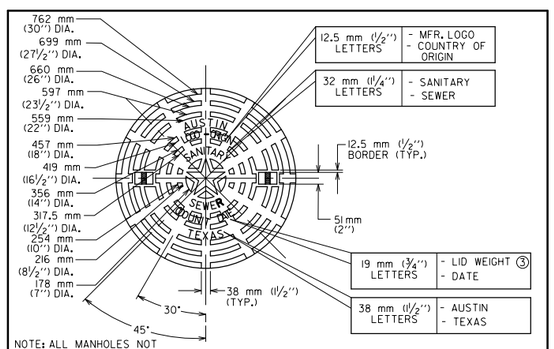

NOTE: ALL MANHOLES NOT LOCATED IN PAVED AREAS SHALL HAVE BOLTED COVERS AS PER SPEC. 506S, SECTION 506S.3, MATERIALS AND COMPONENTS, ITEMS M & N.

LID PLAN VIEW

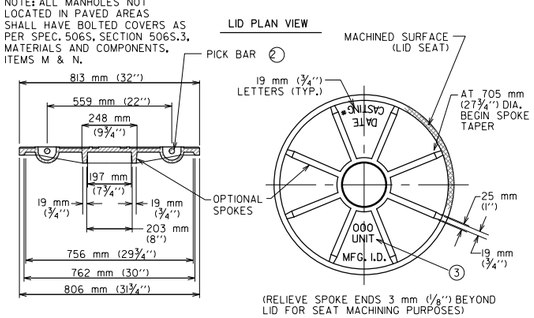

LID SECTION VIEW LID SECTION VIEW

CITY OF AUSTIN AUSTIN WATER UTILITY		SANITARY SEWER MANHOLE RING AND 813 mm (32") COVER	
RECORD COPY SIGNED BY KATHI L. FLOWERS	3/9/04 ADOPTED	THE ARCHITECT/ENGINEER ASSUMES RESPONSIBILITY FOR APPROPRIATE USE OF THIS STANDARD.	STANDARD NO. 503S-4W 1 OF 3

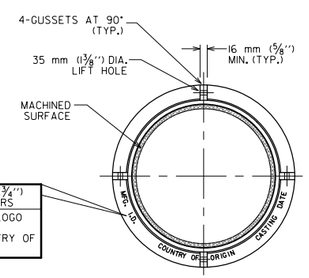

NOTE: ALL MANHOLES NOT LOCATED IN PAVED AREAS SHALL HAVE BOLTED COVERS AS PER SPEC. 506S, SECTION 506S.3, MATERIALS AND COMPONENTS, ITEMS M & N.

MANHOLE RING

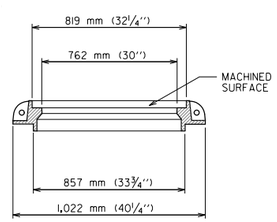

RING SECTION

CITY OF AUSTIN AUSTIN WATER UTILITY		SANITARY SEWER MANHOLE RING AND 813 mm (32") COVER	
RECORD COPY SIGNED BY KATHI L. FLOWERS	3/9/04 ADOPTED	THE ARCHITECT/ENGINEER ASSUMES RESPONSIBILITY FOR APPROPRIATE USE OF THIS STANDARD.	STANDARD NO. 503S-4W 2 OF 3

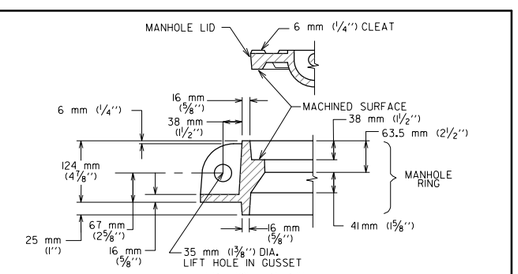

LIFT HOLE DETAIL

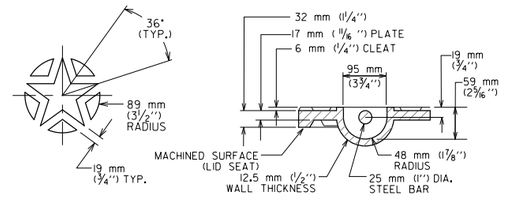

STAR LAYOUT PICK BAR DETAIL

NOTES:
① ALL CORNERS AND EDGES SHALL HAVE A 1.5 mm (1/16") MINIMUM RADIUS.
② LIDS SHALL BE CAST WITH TWO 25 mm (1") DIA. STEEL PICK BARS.
③ LID WEIGHTS SHALL BE 935 N (210 LBS.) FOR CAST IRON OR 779 N (175 LBS.) FOR DUCTILE IRON. WEIGHT SHALL BE CAST ON BOTH TOP AND BOTTOM OF LID.
④ MANUFACTURER SHALL PROVIDE INDEPENDENT TESTING LABORATORY REPORT ON 40,000 POUND PROOF LOAD TEST CONDUCTED ACCORDING TO AASHTO M-306.
⑤ FILLETS SHALL BE 6 mm (1/4") RADIUS UNLESS OTHERWISE SPECIFIED.
⑥ MANUFACTURER SHALL REMOVE EXCESS IRON AND MACHINE FINISH SEATING SURFACES TO NOTED DIMENSIONS.
NOTE: ALL MANHOLES NOT LOCATED IN PAVED AREAS SHALL HAVE BOLTED COVERS AS PER SPEC. 506S, SECTION 506S.3, MATERIALS AND COMPONENTS, ITEMS M & N.

CITY OF AUSTIN AUSTIN WATER UTILITY		SANITARY SEWER MANHOLE RING AND 813 mm (32") COVER	
RECORD COPY SIGNED BY KATHI L. FLOWERS	3/9/04 ADOPTED	THE ARCHITECT/ENGINEER ASSUMES RESPONSIBILITY FOR APPROPRIATE USE OF THIS STANDARD.	STANDARD NO. 503S-4W 3 OF 3

NUMBER	DATE	REVISION	APPROVED

CEDAR PARK

Binkley & Barfield, Inc
consulting engineers
Texas Registration Number F-257

ANDERSON MILL ROAD

STANDARD DETAILS
WASTEWATER DETAILS

DESIGN BY: BLJ DRAWN BY: BLJ CHECKED BY: DRE APPROVED BY: RG PROJECT NO: 156402 DATE: 10/6/2016	SCALE: NTS SHEET: PAGE: 283	

10/6/2016
9:04:06 AM
...\CADD\SHEETS\RDWW1*AM*01.dgn