SHEET NO.
1

# CITY OF CEDAR PARK

CEDAR PARK

## ANDERSON MILL ROAD PHASE 2
## VOLUME 2
### WILLIAMSON COUNTY

LIMITS: FROM NORTH OF GASPAR BEND TO SOUTH OF RM 1431

TOTAL LENGTH OF PROJECT = 4501 FT. = 0.85 MI.

TYPE: FOR THE WIDENING FROM A TWO LANE ROADWAY TO A FOUR LANE ROADWAY.

CONSISTING OF: GRADING, PAVING, DRAINAGE, SIGNING, AND PAVEMENT MARKINGS

PLANS PREPARED BY:

Kimley»Horn
TEXAS REGISTRATION F-928
BUILDING 4, SUITE 200
10814 JOLLYVILLE ROAD
AUSTIN, TEXAS 78759

STATE OF TEXAS
AUSTIN S. HELTON
12422
LICENSED
PROFESSIONAL ENGINEER

SUBMITTED FOR LETTING $$$DATE$$$

PROJECT MANAGER
KIMLEY-HORN AND ASSOCIATES, INC.

FINAL PLANS

NAME OF CONTRACTOR: _____

DATE OF LETTING: _____

DATE WORK BEGAN: _____

DATE WORK COMPLETED: _____

DATE WORK ACCEPTED: _____

FINAL CONTRACT COST: _____

CEDAR PARK CITY COUNCIL
MAYOR: JIM PENNIMAN-MORIN
PLACE ONE: STEPHEN THOMAS
PLACE TWO: MEL KIRKLAND
PLACE THREE: ANNE DUFFY
PLACE FOUR: ERIC BOYCE
PLACE FIVE: KEVIN HARRIS
PLACE SIX: HEATHER JEFTS

N

WILLIAMSON COUNTY
**CITY OF CEDAR PARK**
NOT TO SCALE

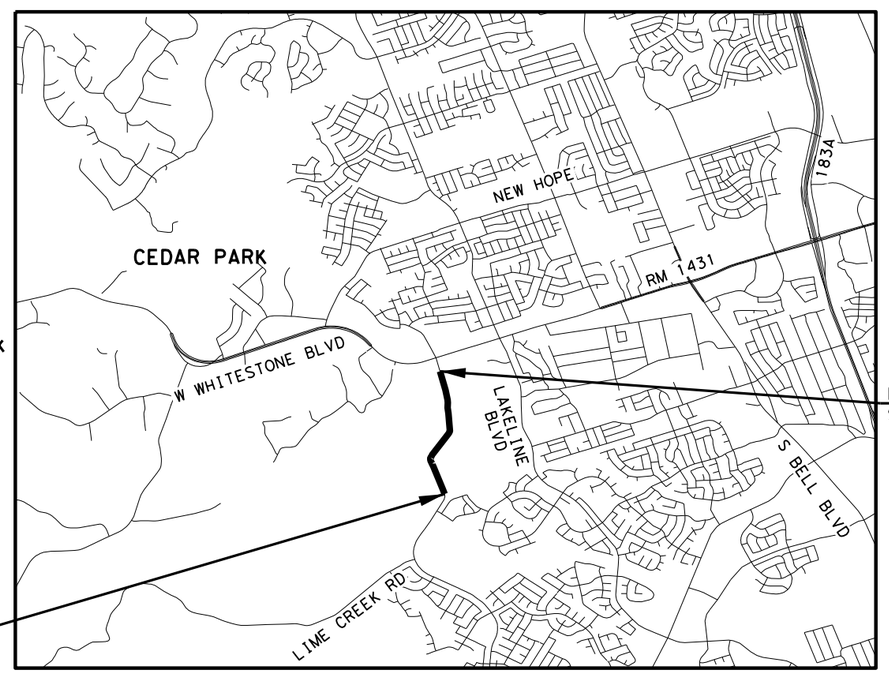


END PROJECT
STA 167+64.00

BEGIN PROJECT
STA 122+63.00

**LOCATION MAP**
**(N.T.S.)**

PROJECT CONTROL NOTES:

1. ALL PROJECT COORDINATES ARE REFRENCES TO THE CITY OF CEDAR PARK SURVEY CONTROL MONUMENTS WHICH ARE BASED ON THE TEXAS STATE PLANE COORDINATE SYSTEM, CENTRAL ZONE, NAD 83/HARN 93 HORIZONTALLY AND NAVD 88 VERTICALLY. ALL COORDINATES SHOWN HERE ARE ADJUSTED SURFACE POSITIONS WITH A SURFACE ADJUSTMENT FACTOR OF 1.00012.
2. REFER TO PLAN & PROFILE SHEETS FOR BENCHMARK DATA.

DESIGN SPEED = 40 MPH
ADT PRESENT : 10,406(2012)
FUNCTIONAL CLASSIFICATION: COLLECTOR

APPROVED FOR CONSTRUCTION BY: 1/10/2023
Chris Brickey
CITY OF CEDAR PARK

APPROVED FOR CONSTRUCTION BY:
CITY OF CEDAR PARK

$$$SYTIME$$$
$$$DATE$$$

## GENERAL


| | | |
|---|---|---|
| 1 | | TITLE SHEET |
| 2 | | INDEX OF SHEETS |
| 3 | -- 5 | GENERAL NOTES |
| 6 | -- 7 | EXISTING TYPICAL SECTIONS |
| 8 | -- 9 | PROPOSED TYPICAL SECTIONS |
| 10 | -- 11 | QUANTITY SUMMARIES |


## TRAFFIC CONTROL PLAN


| | | |
|---|---|---|
| 12 | | TRAFFIC CONTROL NARRATIVE |
| 13 | | ADVANCE WARNING SIGNS |
| 14 | -- 15 | TCP TYPICAL SECTIONS |
| 16 | -- 21 | TRAFFIC CONTROL PLAN PHASE 1 LAYOUTS |
| 22 | -- 27 | TRAFFIC CONTROL PLAN PHASE 2 LAYOUTS |
| 28 | -- 31 | TRAFFIC CONTROL PLAN PHASE 3 LAYOUTS |
| 32 | -- 37 | *COA STANDARD DETAILS - TCP |


## ROADWAY DETAILS


| | | |
|---|---|---|
| 38 | | HORIZONTAL ALIGNMENT DATA |
| 39 | -- 48 | ROADWAY PLAN & PROFILE |
| 49 | | RAIL LAYOUT |
| 50 | | DRIVEWAY DETAIL |
| 51 | -- 54 | SIDEWALK LAYOUT |
| 55 | -- 61 | *COA STANDARD DETAILS - ROADWAY |
| 62 | -- 64 | *C221 |
| 65 | | *TRF |


## DRAINAGE


| | | |
|---|---|---|
| 66 | -- 67 | OVERALL DRAINAGE AREA MAPS |
| 68 | -- 77 | DRAINAGE AREAS |
| 78 | -- 87 | DRAINAGE PLAN SHEETS |
| 88 | -- 91 | DRAINAGE PROFILE SHEETS |
| 92 | | HYDRAULIC DATA |
| 93 | -- 94 | HYDRAULIC DATA- INLET |
| 95 | -- 96 | HYDRAULIC DATA- LINKS |
| 97 | | DRAINAGE COLLAR DETAIL |
| 98 | -- 101 | *COA STANDARD DETAILS - DRAINAGE |
| 102 | -- 103 | *TYPE IR & IIR |
| 104 | | *SETP-PD |


## WATER


| | | |
|---|---|---|
| 105 | -- 109 | FIRE HYDRANT LAYOUT |
| 110 | -- 112 | WATERLINE PLAN & PROFILE |
| 113 | | *COA STANDARD DETAILS - WATER |


## TRAFFIC ITEMS


| | | |
|---|---|---|
| 114 | -- 116 | ILLUMINATION LAYOUT |
| 117 | -- 122 | *ED(1)-14, ED(3-7)-14 |
| 123 | -- 124 | *RID(1)-17 & RID(2)-17 |
| 125 | -- 126 | *RIP(2)-19 & RID(4)-19 |
| 127 | -- 131 | SIGNING AND PAVEMENT MARKING |
| 132 | | *COA STANDARD DETAILS -TRAFFIC |
| 133 | | *D&OM(1)-20 |
| 134 | | *D&OM(2)-20 |
| 135 | | *D&OM(4)-20 |


## ENVIRONMENTAL ISSUES


| | | |
|---|---|---|
| 136 | -- 140 | EROSION CONTROL LAYOUT |
| 141 | | *EC(1)-16 |


STATE OF TEXAS
AUSTIN S. HELTON
124922
LICENSED
PROFESSIONAL ENGINEER

* THE STANDARD SHEETS SPECIFICALLY IDENTIFIED ABOVE, FOR THE TCP, ROADWAY, DRAINAGE, SIGNING, PAVEMENT MARKINGS, DELINEATIONS, & SW3P HAVE BEEN SELECTED BY ME OR UNDER MY SUPERVISION AS BEING APPLICABLE TO THIS PROJECT.

8/5/2022

AUSTIN S. HELTON, P.E. 124922
8/5/2022

| NO | DATE | ISSUES AND REVISIONS |
|---|---|---|


Kimley»Horn F-928
10814 JOLLYVILLE ROAD
BLDG. 4, STE 200
AUSTIN, TX 78759
PHONE: 512-418-1771


# INDEX OF SHEETS

SHEET 1 OF 1
ANDERSON MILL ROAD PHASE 2

CEDAR PARK



FILENAME: AMR*GEN*INDEX.dgn
PLOTTED: 8/5/2022 3:18:30 PM

**City of Cedar Park, Texas**
**Capital Improvement Project General Construction Notes**
**Revised June 1, 2020**
**General Notes:**

1. General Contractor shall call for all utility locates prior to any construction. Water & wastewater owned by the City of Cedar Park can be located by calling Texas 811 at 1-800-344-8377. Allow three business days for utility locates by the City of Cedar Park.

2. All construction shall be in accordance with the latest City of Austin Standard Specifications. City of Austin standards shall be used unless otherwise noted.

3. Prior to City acceptance of all improvements, all graded and disturbed areas inside the right of way between the property line and edge of pavement / back of curb shall be revegetated according to COA specification 602S and 606S; all graded and disturbed areas outside of the right of way shall be re-vegetated in accordance with the City of Austin Specification Item #604 native mix unless another re-vegetation specification is specifically identified in the plans and/or bid form.

4. The Contractor shall provide the City of Cedar Park copies of all test results prior to acceptance of this project.

5. City, owner, engineer, contractor, representatives of all utility companies, and a representative from the testing lab shall attend pre-construction conference prior to start of construction. The contractor shall schedule the meeting with the City of Cedar Park Engineering Department 48 hours prior to this pre-construction meeting (512-401-5000).

6. Excess soil shall be removed at the contractor's expense. Notify the City of Cedar Park for approval if the disposal site is inside the City's jurisdictional boundaries.

7. Burning is prohibited.

8. No blasting is allowed on this project.

9. Any changes or revisions to these plans must first be submitted to the City by the design engineer for review and written approval. All changes and revisions made to the design of utilities or impacts utilities shall use revision clouds to highlight all revisions or changes with each submittal. Revision triangles shall be used to mark revisions. All clouds and triangle markers from previous revisions may be removed. Revision information shall be updated in the appropriate areas of the Title Block.

10. The Contractor will reimburse the City for all cost incurred as a result of any damage to any City utility by the Contractor, regardless of these plans.

11. An engineer's concurrence letter and electronic 22"x34" record drawings shall be submitted to the Engineering Department prior to the issuance of final acceptance. The Engineer and Contractor shall verify that all final revisions and changes have been made to record drawings prior to City submittal. Record construction drawings, including roadway and all utilities, shall be provided to the City in AutoCad ". dwg"files and ".PDF"format on a CD, DVD, or USB Flash Drive. Line weights, line types and text size shall be such that if half-size prints (11"x 17") were produced, the plans would still be legible. All required digital files shall contain a minimum of two (2) control points referenced to the State Plane Grid Coordinate System Texas Central Zone (4203), in US feet and shall include rotation information and scale factor required to reduce surface coordinates to grid coordinates in US feet.

12. ALL RESPONSIBILITY FOR THE ADEQUACY OF THESE PLANS REMAINS WITH THE ENGINEER WHO PREPARED THEM. IN REVIEWING THESE PLANS, THE CITY OF CEDAR PARK MUST RELY ON THE ADEQUACY OF THE WORK OF THE DESIGN ENGINEER.

13. A traffic control plan sign and sealed by a Licensed Texas Professional Engineer, in accordance with the Texas Manual on Uniform Traffic Control Devices, shall be submitted to the City for review and approval prior to any partial or complete roadway closures.

14. The contractor shall keep the site clean and maintained at all times, to the satisfaction of the City. This project will not be accepted until the site has been cleaned and re-vegetated to the satisfaction of the City.

15. Signs are not permitted in Public Utility Easements, Set Backs or Drainage Easements.

16. Inspect temporary erosion controls on a daily basis. Adjust the controls and/or remove any sediment buildup as necessary.

17. Contractor will be responsible for keeping roads and drives adjacent to and near the site free from soil, sediment and debris. Contractor will not remove soil, sediment or debris from any area or vehicle by means of water, only shoveling and sweeping will be allowed. Contractor will be responsible for dust control from the site.

18. The Contractor shall be responsible for all damage to private property, which occurred as a result of any portion of this project. Any damage to private property shall be repaired to equal or better condition. The Contractor shall coordinate all repairs to private property with the property owner. Contractor shall pay and/or settle with private property owner for all costs related to any damage. The City will not provide separate pay for repair of any damages, reimbursements or settlements.

19. Contractor shall provide the services of the City's approved SCADA consultant and controls instrumentation consultant. (When applicable to SCADA) The cost of the consultant and/or any equipment shall be subsidiary to the cost of the project (no separate pay) unless specifically identified on the bid form.

20. The contractor shall make applications to Pedernales Electric Cooperative for electric service if new service is required. The City will assume the service upon acceptance of the project (if required). The contractor will pay for electric power until the meter is transferred to the City of Cedar Park. Impact fees and Application Fees required by PEC will be the responsibility of the Contractor unless specifically identified in the contract.

21. The contractor shall provide combination locks for all gates, hatches, vaults, and MCC boxes. Each lock shall be pre-approved and set to the City's requirements. (No separate pay)

22. All work on these plans shall be performed. Pay for work shown on these plans, which are not identified in the contract, shall be considered incidental to the items specifically identified for payment.

23. The contractor shall provide a competent and qualified superintendent to supervise all work. The superintendent shall be present during all construction activities.

24. Any survey monuments damaged or moved as a result of this project shall be replaced to equal or better condition. A Texas Registered Professional Land Surveyor shall oversee the replacement and certify the replacement for its intended use. No separate pay will be provided.

25. Adequate drainage conditions, in accordance with the City of Austin Drainage Criteria Manual, shall be maintained at all times.

26. Any tree removed or damaged by this project, which is not specifically identified to be removed by the plans, will be replaced according to the requirements of the City of Cedar Park Code of Ordinances. No separate pay will be provided.

27. The contractor shall uncover all utilities within the limits of construction and verify their horizontal and vertical location prior to any construction activities. The contractor shall notify the City and the Engineer, IN WRITING, of any conflicts prior to any other construction including but not limited to exact locations of conflicts with proposed or existing utilities. No additional pay unless specifically identified for payment in the contract documents. The contractor shall also make his own sub-surface investigation prior to bid.

28. Only stainless steel casing spacers are allowed in encasement pipe(s).

29. No separate pay will be given to de-water trenches or other excavated areas.

30. Soil material, of sufficient organic content, imported for re-vegetation of disturbed areas shall be approved by the Engineering Department prior to placement. A sample (submittal) is required. Sandy-loam and/or soils with high clay content will not be accepted.

31. The contractor shall perform pumping stations and/or lift station start-up independently: prior to requesting witness or acceptance by the City. When a final start-up fails to be complete and acceptable and when City personnel are present at start-up, each additional start-up will be charged to the contractor, as liquidated damages, $500.00 per additional meeting.

32. Shutout of any customers of the City's utility due to tie-ins shall only be scheduled for nighttime work unless approved by the Public Works Department. The City's field representative shall coordinate and inspect all nighttime shutouts and tie-ins. The contractor shall request shutouts two weeks in advance. Shutouts will only be allowed in the following times and are subject to approval by the City: 10 PM - 6 AM; beginning on Tuesday, Wednesday or Thursday night(s). No extra time will be granted to the contract for unscheduled work in the time period allowed or due to requests outside the approved time periods.

33. All construction and construction related activities shall be performed Monday thru Friday from 7:00 A.M. to 6:00 P.M. However, construction activities within five hundred feet (500') of a dwelling or dwelling unit shall be performed between the hours of 8:00 a.m. and 6:00 p.m. Otherwise all construction and construction related activities shall conform to City of Cedar Park Code of Ordinances, specifically ARTICLE 8.08.

34. Approval for construction activities performed on Owner's Holidays, and/or Saturdays, outside of Monday through Friday 8 am to 5 pm, or in excess of 8 hours per day shall be obtained in writing 48 hours in advance, and inspection fees at 1.5 times the hourly inspection rate shall be billed directly to the contractor. There shall be no construction or construction related activities performed on Sunday. The City reserves the right to require the contractor to uncover all work performed without City inspection.

35. Temporary rock crushing operations are not allowed. All sources for flexible base material are required to be approved by the City. Prior to base placement all current triaxial test reports for the proposed stockpiles are to be submitted to the City's project representative for review and approval.

36. There shall be no water or wastewater appurtenances, including but not limited to, valves, fittings, meters, clean-outs, manholes, or vaults in any driveway, sidewalk, traffic or pedestrian area.

37. Sidewalks shall not use curb inlets as a partial walking surface. Sidewalks shall not use traffic control boxes, meter or check valve vaults, communication vaults, or other buried or partially buried infrastructure as a vehicular or pedestrian surface.

**Street Notes:**

1. No trenching of compacted base will be allowed. A penalty and/or fine may be imposed to the general contractor if trenching of compacted base occurs without City approval, regardless of who performed the trenching.

2. All sidewalks shall comply with the Americans With Disabilities Act and the Texas Architectural Barriers Act. The City of Cedar Park has NOT reviewed these plans for compliance with the Americans With Disabilities Act, Texas Architectural Barriers Act, or any other accessibility legislation, and does not warranty or approve these plans for any accessibility standards. However, prior to project acceptance, the Contractor shall submit to the COCP documentation that the project was inspected by the Texas Department of Licensing and Regulation or a Registered Accessibility Specialist and the project is in compliance with the requirements of the Texas Architectural Barriers Act.

3. Street barricades shall be installed on all dead end streets and as necessary during construction to maintain job safety.

4. Any damage caused to existing pavement, curbs, sidewalks, ramps, etc., shall be repaired by the contractor to the satisfaction of the City prior to acceptance of this project.

5. Density testing of compacted subgrade material, first course and second course compacted base, shall be made at 500 foot intervals. Any failed tests will be re-tested at the expense of the contractor.

6. The contractor shall coordinate with the City's field representative 48 hours prior to scheduled density testing. The City's field representative shall witness all testing.

7. The City will notify the contractor of the name, contact and phone number of the testing laboratory for this job. The City will pay for all tests that pass the specifications the first time. The CONTRACTOR shall schedule the testing with the laboratory and notify the City's field representative of the time and location of all tests.

8. Traffic control signs and pavement markings in accordance with the Texas Manual on Uniform Traffic Control Devices to be installed as directed by the City of Cedar Park prior to City acceptance of this project.

9. Slope of natural ground adjacent to the right-of-way shall not exceed 3:1. If a 3:1 slope is not possible, a retaining wall or some other form of slope protection approved by the City shall be placed in a location acceptable to the City.

10. The City, engineer, contractor, and a representative from the asphalt-testing lab shall attend a pre-paving conference prior to the start of HMAC paving. The contractor shall give the City's field representative 48 hours notice prior to this meeting.

11. Re-testing of the asphalt pavement shall be limited to one retest per project. Failed tests shall be the financial responsibility of the contractor.

12. All pavement markings and signage shall comply with MUTCD standards.

13. Pavement markings shall be thermoplastic unless otherwise noted.

14. Street name signs shall be provided and installed in accordance with Street Name Sign Pole detail provided by the City of Cedar Park.

15. All street name signs shall be high intensity retro grade.

16. A minimum of seven days of cure time is required for HMAC prior to the introduction of vehicular traffic to any streets.

17. No Fencing or Wall is allowed to be constructed so that it obstructs the sight lines of drivers from an intersecting public roadway or from an intersecting private driveway. Sight lines are to be maintained as described in City Code Section 14.05.007. Installing a fence or wall which does not comply with the City's Sight Distance Requirements or Fencing Regulations is a violation of the City's Ordinance and may be punishable pursuant to Section 1.01.009 of City Code.

| NO | DATE | ISSUES AND REVISIONS |
|---|---|---|

STATE OF TEXAS
AUSTIN S. HELTON
124922
LICENSED
PROFESSIONAL ENGINEER
8/5/2022

Kimley»Horn F-928
10814 JOLLYVILLE ROAD
BLDG. 4, STE 200
AUSTIN, TX 78759
PHONE: 512-418-1771

GENERAL NOTES
SHEET 1 OF 3
ANDERSON MILL ROAD PHASE 2

CEDAR PARK



FILENAME: AMR*GEN*NOTES*01.dgn
PLOTTED: 8/5/2022 3:18:38 PM

CONT.

18. Utility service boxes or other utility facilities shall not be installed within areas determined to be required sight lines of two intersecting public streets or within sight lines of a private driveway. Sight lines are to be maintained compliant with Table 1-1 of the Austin Transportation Criteria Manual. Utilities determined by the Director of Engineering to be placed within required sight lines may be required to be relocated at the expense of the contractor prior to the City issuing a Certificate of Occupancy or prior to the City's Acceptance of the Project Improvements.

19. All lane closures shall occur only between the hours of 9 AM and 4 PM. Any night time lane closures require approval by the Director of Engineering and shall occur between the hours of 8 PM and 6 AM. Lane closures observed by City during the peak hours of 6 AM to 9 AM, or 4 PM to 8 PM will be subject to fine per Chapter 1 of City Ordinance, and/or subsequent issuance of Work Stoppage.

20. Improvements that include reconstruction of an existing Type II driveway shall be done in a manner which retains operations of not less than half of the driveway at all times. Full closure of such driveway can be considered with written authorization retained by the Contractor from the property owner(s) or access easement right holder(s) of the driveway allowing full closure of the driveway.

21. Trees must not overhang within 10' vertically of a sidewalk, or 18' vertically of a roadway or driveway.

**Wastewater Notes:**

1. Refer to the City of Cedar Park Public Works Utility Policy and Specifications manual.

2. The contractor, with City approval, shall raise manhole frames and covers and water valve boxes to finished pavement grade at the contractor's expense. All utility adjustments shall be completed prior to final paving construction.

3. The location of any existing utility lines shown on these plans may not be accurate. Any damage to existing utility lines, both known and unknown, shall be repaired at the expense of the contractor. The contractor shall make his own sub-surface investigation prior to bid. The contractor shall uncover all utilities within the limits of construction and verify their horizontal and vertical location prior to any construction activities.

4. All iron pipe and fittings shall be wrapped with at least 8-mil polyethylene wrap, according to the COA Specification. All metallic pipe shall be cathodically protected.

5. All water mains, wastewater mains and service lines shall meet City of Austin minimum cover specifications. All streets are to be cut to subgrade prior to installation of water mains.

6. Where 48-inches of cover below subgrade cannot be achieved for wastewater service lines alternate materials shall be used. A minimum of 36-inches of cover below subgrade shall be achieved. Any wastewater service line with cover between 36-inch and 48-inches shall be SDR-26 PVC pressure pipe.

7. Gasketed PVC sewer main fittings shall be used to connect SDR-35 PVC to SDR-26 PVC pressure pipe or C-900.

8. SDR-35 WW is not allowed.

9. Forcemains shall be epoxy lined ductile iron.

10. All sanitary sewers, excluding service lines, shall be mandrel tested per TCEQ (Texas Commission on Environmental Quality) criteria. A mandrel test will not be performed until backfill has been in place for a minimum of 30 days.

11. All sanitary sewers, including service lines, shall be air tested per City of Austin Standard Specifications.

12. Density testing of compacted backfill shall be made at a rate of one test per two foot lifts per 500 feet of installed pipe, unless specified otherwise by the City.

13. City to be given 48 hours notice prior to all testing of water and wastewater lines. City inspection is required for all testing of water and wastewater lines.

14. Where a water or wastewater line crosses above (or below) a storm sewer structure and the bottom (or top) of the pipe is within 18 inches of the top (or bottom) of the utility structure, the pipe shall be encased with concrete for a distance of at least 1 ft. on either side of the ditch line of the utility structure or the storm sewer. Concrete encasement will not be required for ductile iron (thickness Class 50), AWWA C-900 (SDR-14) 200 psi rated PVC in sizes to 12 inches or AWWA C-905 (SDR-25) 165 psi rated PVC in sizes larger than 12 inches. Concrete encasement shall conform to C.O.A. standard detail 505-1.

15. The allowable (maximum) adjustment for a manhole shall be 12" (inches) or less.

16. Where a sewer line crosses a water line, the sewer line shall be one 20 ft. joint of 150 psi (or greater if specified in the plans) rated PVC centered on crossing.

17. All manhole and inlet covers shall read "City of Cedar Park".

18. All manhole lids outside the pavement shall be bolted. Security bolts per City specifications shall be used.

19. Contractor to notify City of Cedar Park 48 hours prior to connecting to existing utilities. Inspection of connections to existing utilities is required.

20. All pipe bedding material shall conform to City of Austin Standard Specifications.

21. Unless otherwise specified by the Engineer all concrete is to be Class "A" (5 sack, 3000 psi ~ 28-days), and all reinforcing steel to be ASTM A615 60.

22. All wastewater manholes to be coated with organic materials and procedures listed in City of Austin Qualified Products List No. WW-511 (WW-511A and WW-511B are not allowed unless manhole is being structurally rehabilitated with approval by Public Works). All manholes will be pre-coated or coated AFTER testing.

23. Polybrid Coatings on wastewater manholes will not be allowed without pre-approval from the project manager. Any other manhole coating product appearing on the CoA SPL WW-511 is acceptable and required.

24. All manholes will be vacuum tested only.

25. Tracer tape shall be installed on all water and wastewater mains in accordance with City of Austin Standards regardless of the type of pipe or depth of pipe.

26. Piping in and around lift station valve vaults will be painted and/or coated to the City's specifications.

27. MCC's, junction boxes or any housing for electrical components shall be NEMA 4X stainless steel. Painted metal or any other type of box will not be accepted unless specifically identified in the plans.

28. All wastewater lines 10" and larger shall be Video recorded according to COA 510 at the Contractor's expense. The contractor shall supply two copies to the City's Field Representative. No separate pay unless noted on the bid form.

29. Calcutta MH rings are not allowed in the TX DOT ROW.

30. All pressure pipe shall have mechanical restraint and concrete thrust blocking at all valves, bends, tees, plugs, and other fittings.

**Water Notes:**

1. Refer to the City of Cedar Park Public Works Utility Policy and Specifications manual.

2. The top of valve stems shall be at least 18", and no more than 36", below finished grade. Valve stem risers shall be welded on each end to the City's satisfaction.

3. Fire hydrant leads to be ductile iron, Class 350, and installed per City of Austin standard specifications and City of Cedar Park detail.

4. The contractor shall provide cuts for all water lines and fire hydrant bury lines in accordance with the contract.

5. Approved 5 ¼"fire hydrants: American Flow Control, B84B
   - Mueller Company, Super Centurion 250
   - Clow Medallion Hydrant
   - American AVK Company, Series 27 (Model 2780)
   - All fire hydrants must meet City of Cedar Park thread specifications (National Thread)
   - Blue reflector markers shall be located on the centerline of the pavement across from all fire hydrants. Pavement markers at intersections shall be four-sided.

6. Should a Tapping Saddle be approved by Public Works, the saddle shall be Smith-Blair 662 Stainless Steel Tapping Sleeves with all stainless hardware, or approved equal. Requests for alternate providers shall be made to the City of Cedar Park Public Works. No tap exceeding 2"in diameter will be approved.

7. All water lines, including service lines, shall be pressure and leak tested per City of Austin Standard Specifications and witnessed by the City of Cedar Park representative. All failed tests shall be the fiscal responsibility of the contractor, and the contractor may be required to re-test lines if the testing is not witnessed by the City. Contractor must notify the City of Cedar Park 48 hours prior to any testing.

8. All water lines shall be sterilized and bacteriologically tested in accordance with City of Austin Standards. The contractor is responsible for sterilization and the City of Cedar Park is responsible for submitting bacteriological samples to the State unless otherwise approved by the Public Works department. Public Works will require a contractor specialized in disinfection for large diameter lines or critical infrastructure, subsidiary to pipe installation.

9. All water valve risers not in pavement shall be set in concrete in accordance with the City's specifications and details. The standard detail is available on the City's web site.

10. Density testing of compacted backfill shall be made at a rate of one test per two foot lifts per 500 feet of installed pipe unless otherwise approved by the Engineering Department.

11. Contractor to obtain a water meter from the City of Cedar Park for any water that may be required during construction. (512-401-5000)

12. All water meter boxes shall be Ford Gulf Meter Box with locking lid.
   - SINGLE G-148-233
   - DUAL DG-148-243
   - 1"METER YL111 - 444
   - 1 ½" 2" METER 1730-R (LID) & 1730-12 (BOX)/ACCEPTABLE BOXES FOR THIS SIZE OF METER

13. Manhole frames and covers and water valve boxes shall be raised to finished pavement grade at the contractor's expense with City inspection. All utility adjustments shall be completed prior to final paving construction.

14. The location of any existing utility lines shown on these plans is the best available and may not be totally accurate. Any damage to existing utility lines, both known and unknown shall be repaired at the expense of the contractor. The Engineer and/or the City make no guarantee or warranty to the accuracy of these plans. The contractor shall make his own sub-surface investigation prior to bid. The contractor shall uncover all utilities within the limits of construction and verify their horizontal and vertical location prior to any construction activities.

15. All iron pipe and fittings shall be wrapped with at least 8-mil polyethylene wrap in accordance with the COA specification. All metallic pipe shall be cathodically protected.

16. All water mains, wastewater mains and service lines shall meet City of Austin Specifications for minimum cover requirements. All streets are to be cut to subgrade prior to installation of water mains.

17. City to be given 48 hours notice prior to all testing of water and wastewater lines. City inspection is required for all testing of water and wastewater lines.

18. Where a water or wastewater line crosses above (or below) a storm sewer structure and the bottom (or top) of the pipe is within 18 inches of the top (or bottom) of the utility structure, the pipe shall be encased with concrete for a distance of at least 1 ft. on either side of the ditch line of the utility structure or the storm sewer. Concrete encasement may not be required for ductile iron (thickness Class 50), AWWA C-900 (SDR-14) 200 psi rated PVC in sizes to 12 inches or AWWA C-905 (SDR-25) 165 psi rated PVC in sizes larger than 12 inches. Concrete encasement shall conform to C.O.A. standard detail 505-1. This note does not allow for pipe that would otherwise have a higher maximum operating pressure.

19. Contractor to notify City of Cedar Park 48 hours prior to connecting to existing utilities. Inspection is required.

20. All pipe bedding material shall conform to City of Austin Standard Specifications.

21. Tracer tape shall be installed on all water and wastewater mains regardless of the type of pipe or depth of pipe installed.

22. Unless otherwise specified by the Engineer all concrete is to be Class "A" (5 sack, 3000 psi ~ 28-days), and all reinforcing steel to be ASTM A615 60.

23. The City considers protection of its water system paramount to construction activities. City personnel will operate, or authorize the contractor to operate, all water valves that will pass through the City's potable water. The contractor may not operate any water valve, existing or proposed, that will allow water from the City's water system to flow to a proposed or existing water system without the express consent of the City. Notify the City two business days in advance of any request to operate a water valve. The general contractor may be fined $500 or more, including additional theft of water fines, if a water valve is operated in an unauthorized manner, regardless of who operated the valve.

24. All water valves over 24" in size shall have a by-pass line and valve installed. By-pass valves and lines are subsidiary to the cost of the valve unless specifically identified on the bid form.

25. All water pipe and appurtenances larger than 12" shall have a maximum operating pressure greater than 250 psi unless specifically identified on the bid form.

26. A.Y. McDonald "T" series compression fittings will not be accepted by the City of Cedar Park. Mac-Pak compression fittings, or another type listed on the COA SPL is acceptable.

27. All potable water system components installed after January 4, 2014, shall be "lead free"according to the United States Safe Drinking Water Act. The only components exempt from this requirement are fire hydrants. Components that are not clearly identified by the manufacturer as meeting this requirement by marking, or on the product packaging, or by pre-approved submittal, will be rejected for use. A NSF certification will be adequate if the certification has not expired as of January 4, 2014 and remains unexpired at the time of construction.

28. All pressure pipe shall have mechanical restraint and concrete thrust blocking at all valves, bends, tees, plugs, and other fittings.

| NO | DATE | ISSUES AND REVISIONS |
|---|---|---|

STATE OF TEXAS
AUSTIN S. HELTON
124922
LICENSED
PROFESSIONAL ENGINEER
8/5/2022

Kimley»Horn F-928
10814 JOLLYVILLE ROAD
BLDG. 4, STE 200
AUSTIN, TX 78759
PHONE: 512-418-1771

GENERAL NOTES
SHEET 2 OF 3
ANDERSON MILL ROAD PHASE 2

CEDAR PARK



FILENAME: AMR*GEN*NOTES*02.dgn
PLOTTED: 8/5/2022 3:19:00 PM

CONT.

**Storm Sewer Notes:**

1. The contractor with City inspection shall raise manhole frames and covers and water valve boxes to finished pavement grade at the contractor's expense. All utility adjustments shall be completed prior to final paving construction. The contractor shall backfill around manholes and junction boxes with Class A concrete. All utility adjustments shall be completed prior to final paving construction.

2. All manhole lids shall be 32" or larger, unless expressly approved in writing by the Public Works Department. All lids outside the pavement will be bolted.

3. The location of any existing utility lines shown on these plans is the best available and may not be totally accurate. Any damage to existing utility lines, both known and unknown, shall be repaired at the expense of the contractor.

4. Corrugated Metal Pipe is not permitted.

5. All manhole and inlet covers shall read "City of Cedar Park ".

6. Contractor to notify City of Cedar Park 48 hours prior to connecting to existing utilities.

7. All pipe bedding material shall conform to City of Austin Standard Specifications.

8. Unless otherwise specified by the Engineer all concrete is to be Class "A" (5 sack, 3000 psi ~ 28-days), and all reinforcing steel to be ASTM A615 60.

9. Contractor to install and maintain geo-textile fabric barrier (inlet protection) around storm sewer leads and inlets to prevent silt and other material from entering the storm sewer collection system.

10. All curb inlets shall have an Almetek 4”Disc “No Dumping Drains to Waterway” marker.

| NO | DATE | ISSUES AND REVISIONS |
|---|---|---|
| | | |

STATE OF TEXAS
AUSTIN S. HELTON
124922
LICENSED
PROFESSIONAL ENGINEER

8/5/2022

Kimley»Horn
F-928
10814 JOLLYVILLE ROAD
BLDG. 4, STE 200
AUSTIN, TX 78759
PHONE: 512-418-1771

GENERAL NOTES

SHEET 3 OF 3

ANDERSON MILL ROAD PHASE 2

CEDAR PARK



FILENAME: AMR*GEN*NOTES*03.dgn
PLOTTED: 8/5/2022 3:19:21 PM

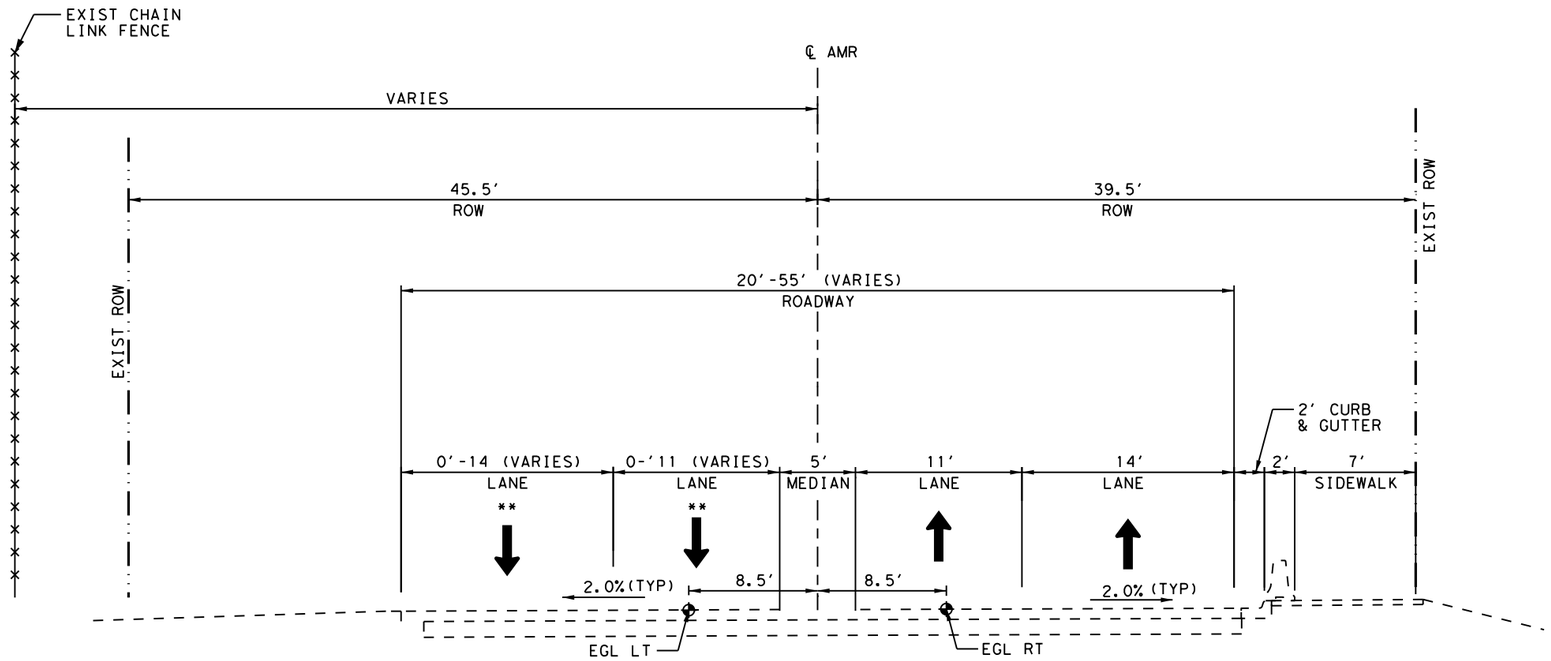


EXISTING TYPICAL SECTION

BEGIN OF PROJECT TO STA 129+00.00

** TRANSITIONS TO ONE LANE IN EACH DIRECTION ON NB PAVEMENT

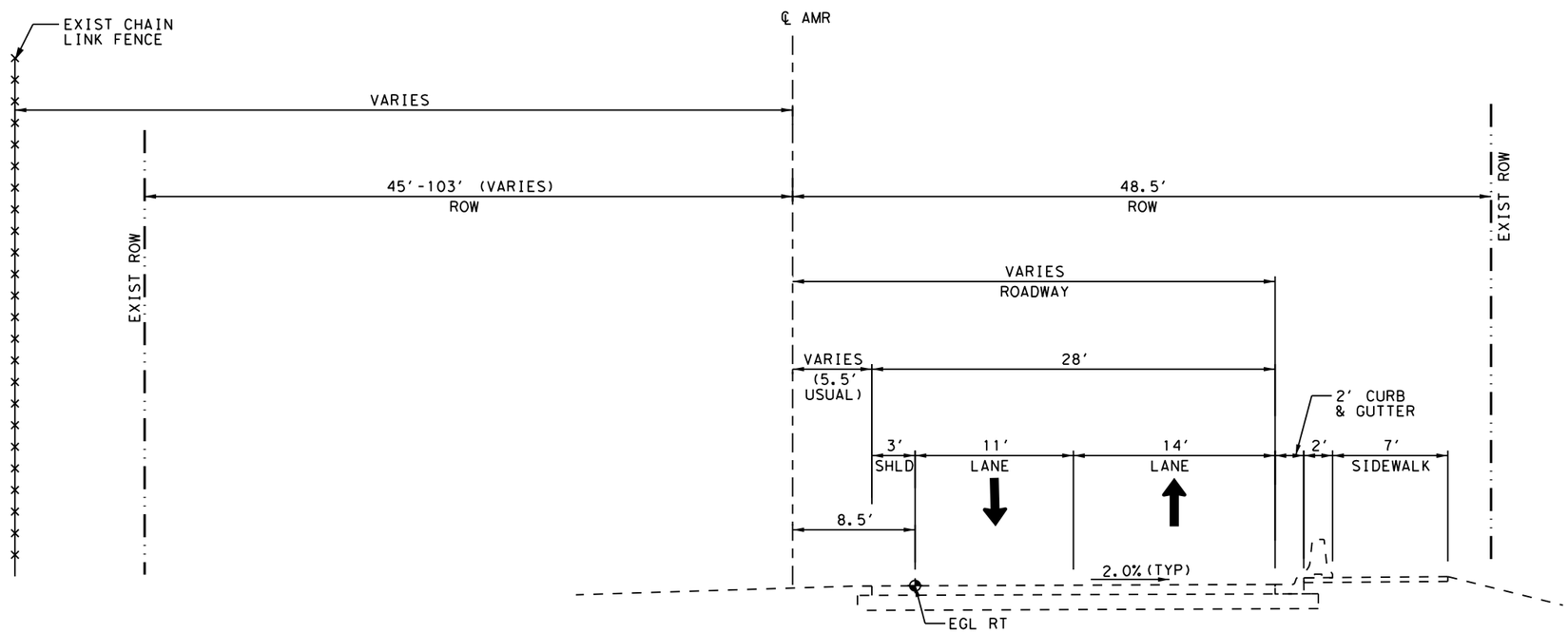


EXISTING TYPICAL SECTION

STA 129+00 TO STA 136+18.00

NOTES:

1. SEE PLAN & PROFILE SHEETS FOR CURB TYPE, SAWCUT, AND MILL AND OVERLAY TRANSITIONS ALONG WITH OTHER ADDITIONAL INFORMATION.

| NO | DATE | ISSUES AND REVISIONS |
|---|---|---|

STATE OF TEXAS
AUSTIN S. HELTON
124922
LICENSED
PROFESSIONAL ENGINEER
8/5/2022

Kimley»Horn F-928
10814 JOLLYVILLE ROAD
BLDG. 4, STE 200
AUSTIN, TX 78759
PHONE: 512-418-1771

# EXISTING TYPICAL SECTIONS

SHEET 1 OF 2

ANDERSON MILL ROAD PHASE 2

CEDAR PARK



FILENAME: AMR*EXIST*TYP*01.dgn
PLOTTED: 8/5/2022 3:19:36 PM

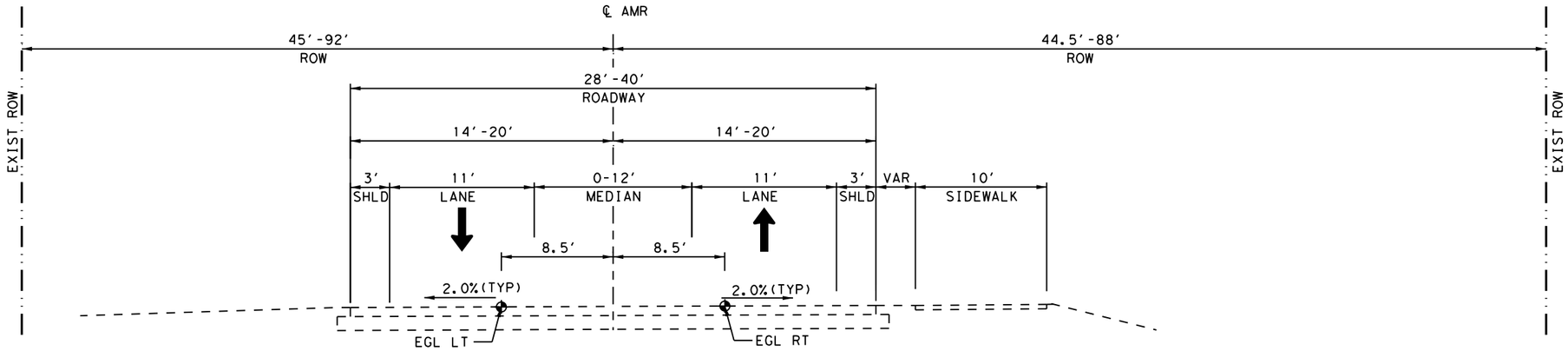


EXISTING TYPICAL SECTION

STA 136+18.00 TO STA 144+66.00

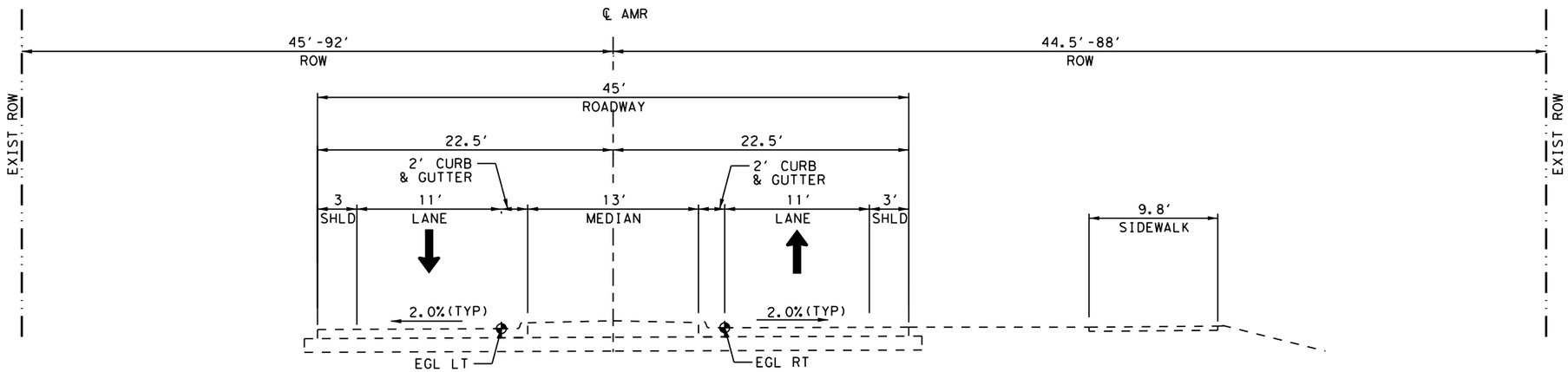


EXISTING TYPICAL SECTION

STA 144+66.00 TO STA 155+01.92

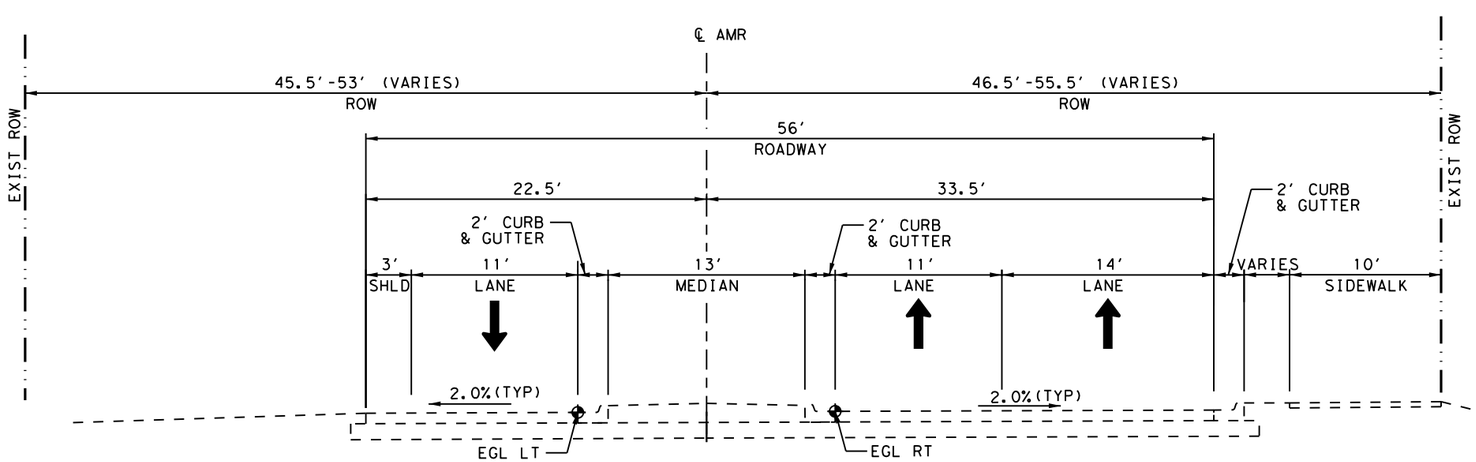


EXISTING TYPICAL SECTION

STA 155+01.92 TO END OF PROJECT

NOTES:

1. SEE PLAN & PROFILE SHEETS FOR CURB TYPE, SAWCUT, AND MILL AND OVERLAY TRANSITIONS ALONG WITH OTHER ADDITIONAL INFORMATION.

| NO | DATE | ISSUES AND REVISIONS |
|---|---|---|

STATE OF TEXAS
AUSTIN S. HELTON
124922
LICENSED
PROFESSIONAL ENGINEER

8/5/2022


Kimley»Horn
F-928
10814 JOLLYVILLE ROAD
BLDG. 4, STE 200
AUSTIN, TX 78759
PHONE: 512-418-1771


# EXISTING TYPICAL SECTIONS

SHEET 2 OF 2

ANDERSON MILL ROAD PHASE 2

CEDAR PARK



FILENAME: AMR-EXIST-TYP-02.dgn
PLOTTED: 8/5/2022 3:19:44 PM

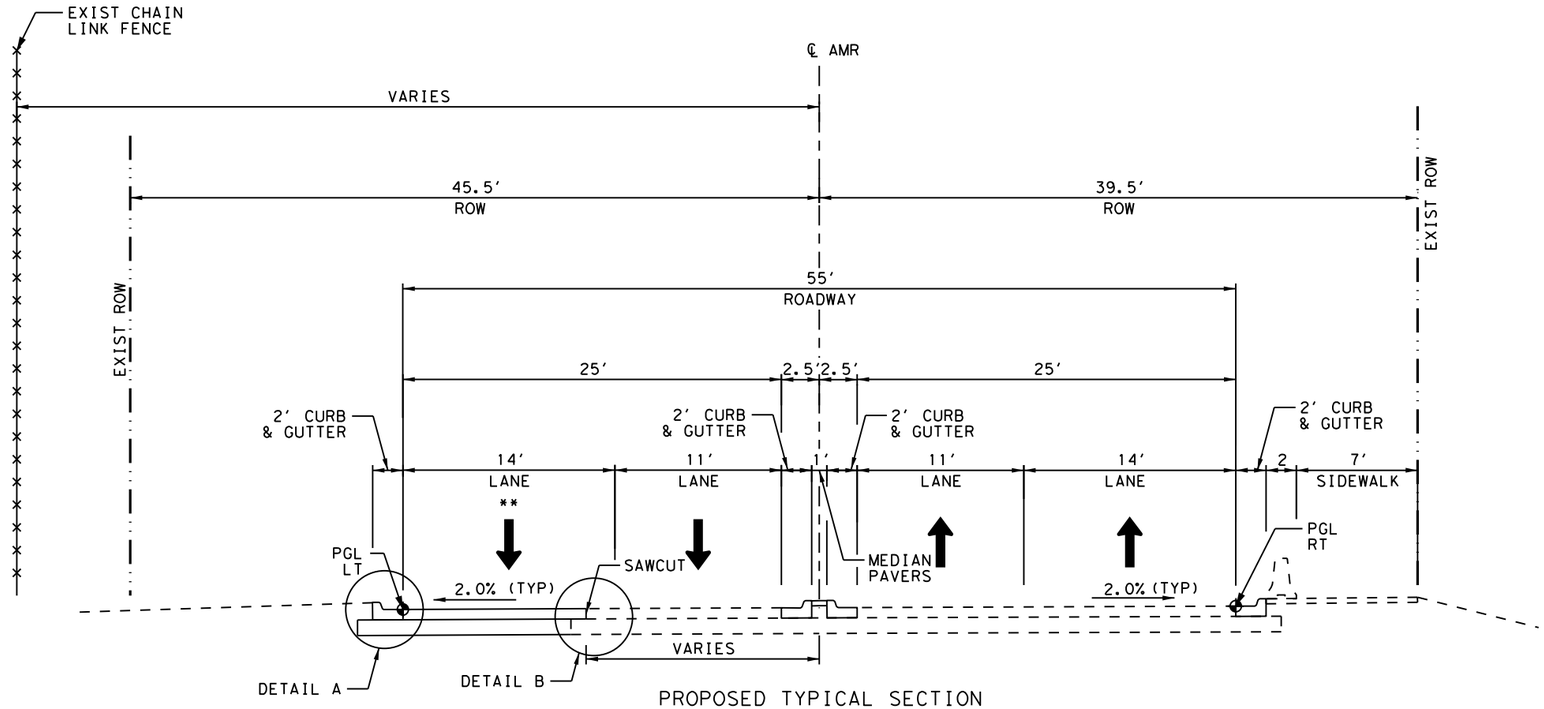


PROPOSED TYPICAL SECTION

BEGIN OF PROJECT TO STA 128+60.49

** MILL & OVERLAY LIMITS ARE STA 123+42.00 TO STA 126+40.57

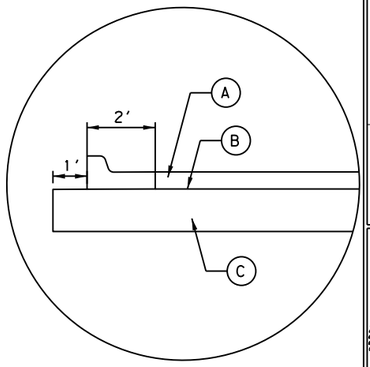


Ⓐ 6" TY D HMAC (2 EQUAL LIFTS)

Ⓑ PRIME COAT

Ⓒ 15" FLEX BASE (3 EQUAL LIFTS)

DETAIL A

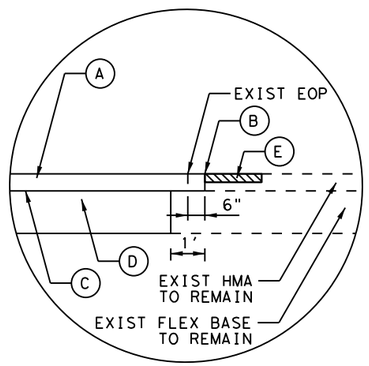


Ⓐ 6" TY D HMAC (2 EQUAL LIFTS)

Ⓑ SAWCUT

Ⓒ PRIME COAT

Ⓓ 15" FLEX BASE (3 EQUAL LIFTS)

Ⓔ 3" TY D HMAC MILL & OVERLAY (IF IN LIMITS OF MILL & OVERLAY)

DETAIL B

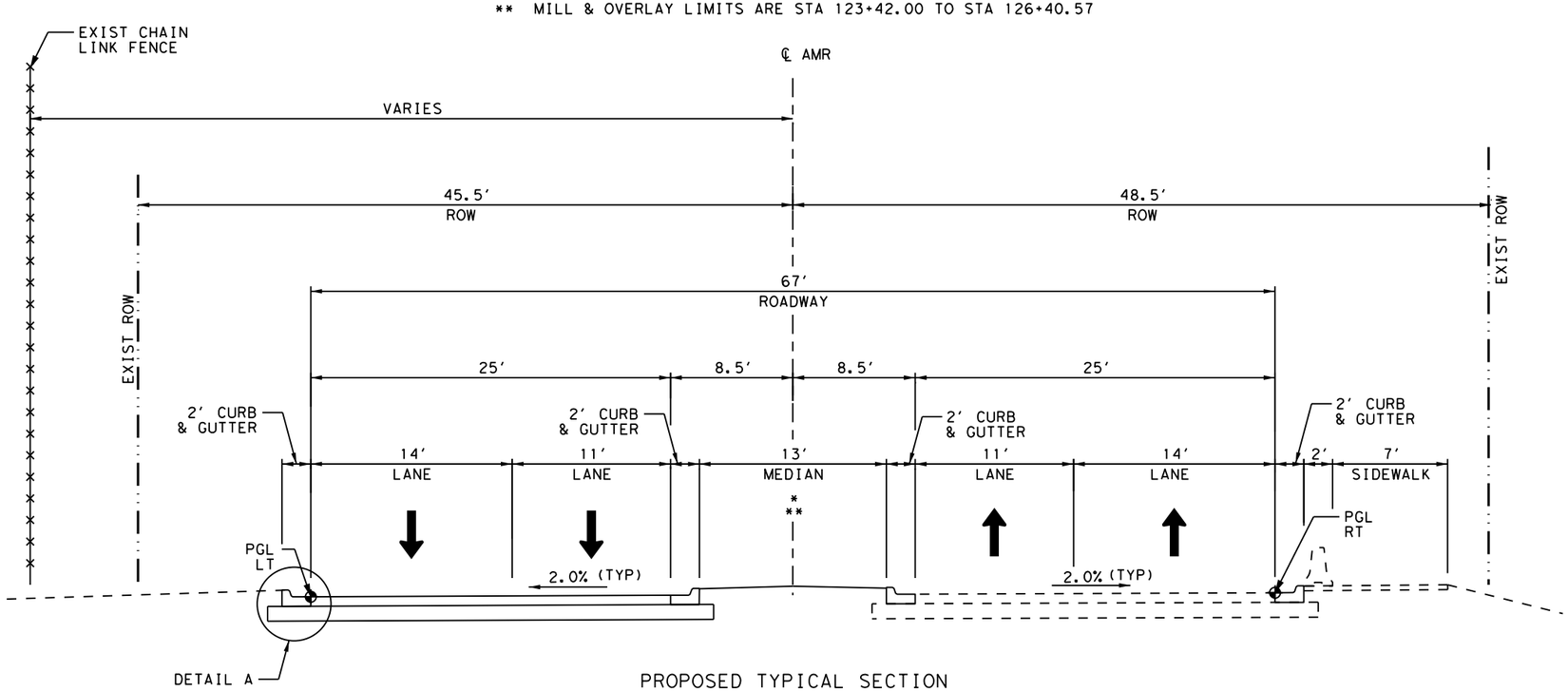


PROPOSED TYPICAL SECTION

128+60.49 TO 136+18.00

* TRANSITIONS FROM 1′ TO 13′ FROM 128+60.49 TO 130+60.00

** REFER TO PLAN & PROFILE SHEETS FOR LIMITS OF GRASS AND BRICK PAVER MEDIAN

NOTES:

1. SEE PLAN & PROFILE SHEETS FOR CURB TYPE, SAWCUT, AND MILL AND OVERLAY TRANSITIONS ALONG WITH OTHER ADDITIONAL INFORMATION.

| NO | DATE | ISSUES AND REVISIONS |
|---|---|---|

STATE OF TEXAS
AUSTIN S. HELTON
124922
LICENSED
PROFESSIONAL ENGINEER
8/5/2022

Kimley»Horn
F-928
10814 JOLLYVILLE ROAD
BLDG. 4, STE 200
AUSTIN, TX 78759
PHONE: 512-418-1771

# PROPOSED TYPICAL SECTIONS

SHEET 1 OF 2

ANDERSON MILL ROAD PHASE 2

CEDAR PARK



FILENAME: AMR*PROP*TYP*01.dgn
PLOTTED: 8/5/2022 3:19:53 PM

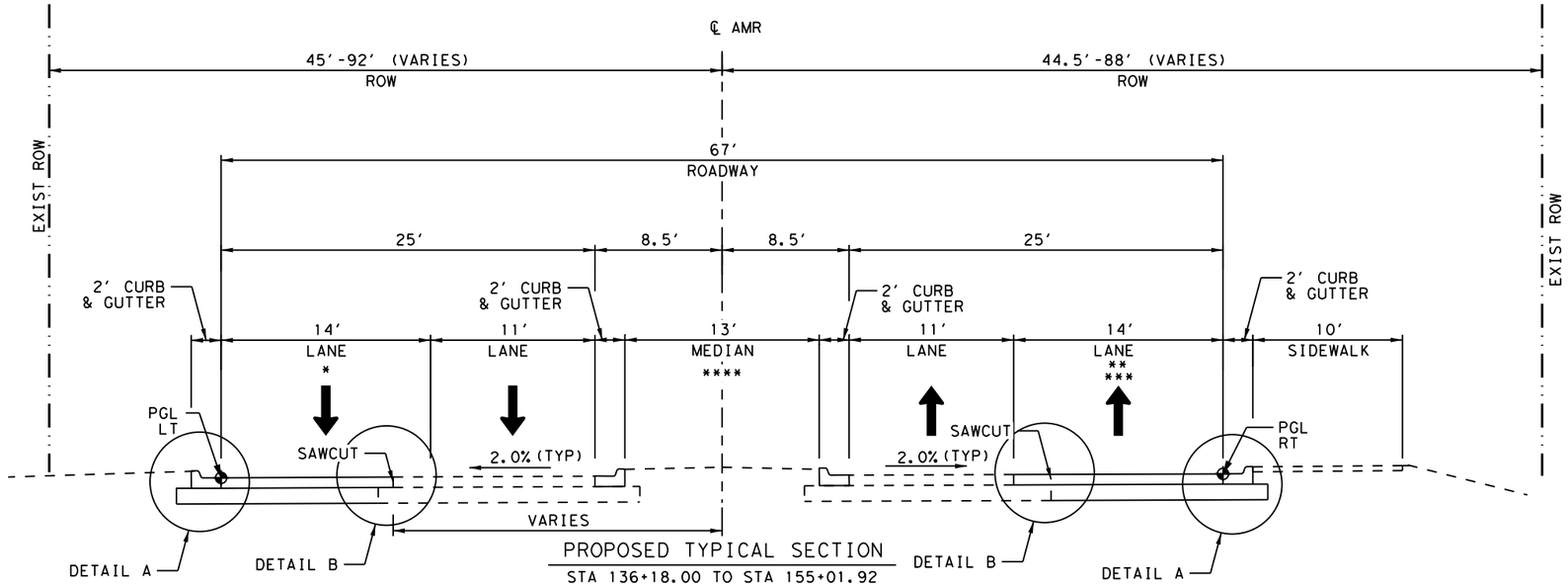


PROPOSED TYPICAL SECTION

STA 136+18.00 TO STA 155+01.92

* LIMITS OF MILL & OVERLAY ARE STA 144+56.92 TO STA 147+79.57

** LIMITS OF MILL & OVERLAY ARE STA 136+18.00 TO STA 138+68.05 AND STA 147+04.00 TO STA 149+96.12

*** LIMITS OF WIDENING ARE STA 136+18.00 TO STA 141+91.27 AND STA 147+04.00 TO STA 155+01.92

**** REFER TO PLAN & PROFILE SHEETS FOR LIMITS OF GRASS & BRICK PAVER MEDIAN

Ⓐ 6" TY D HMAC (2 EQUAL LIFTS)

Ⓑ PRIME COAT

Ⓒ 15" FLEX BASE (3 EQUAL LIFTS)

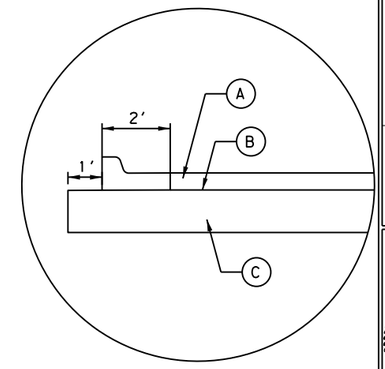


DETAIL A

Ⓐ 6" TY D HMAC (2 EQUAL LIFTS)

Ⓑ SAWCUT

Ⓒ PRIME COAT

Ⓓ 15" FLEX BASE (3 EQUAL LIFTS)

Ⓔ 3" TY D HMAC MILL & OVERLAY (IF IN LIMITS OF MILL & OVERLAY)

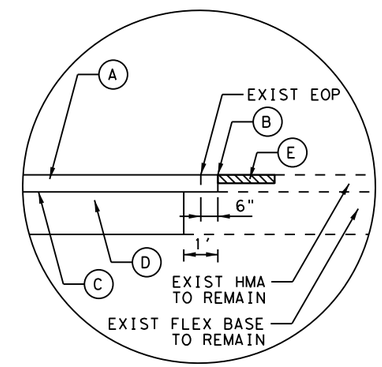


DETAIL B

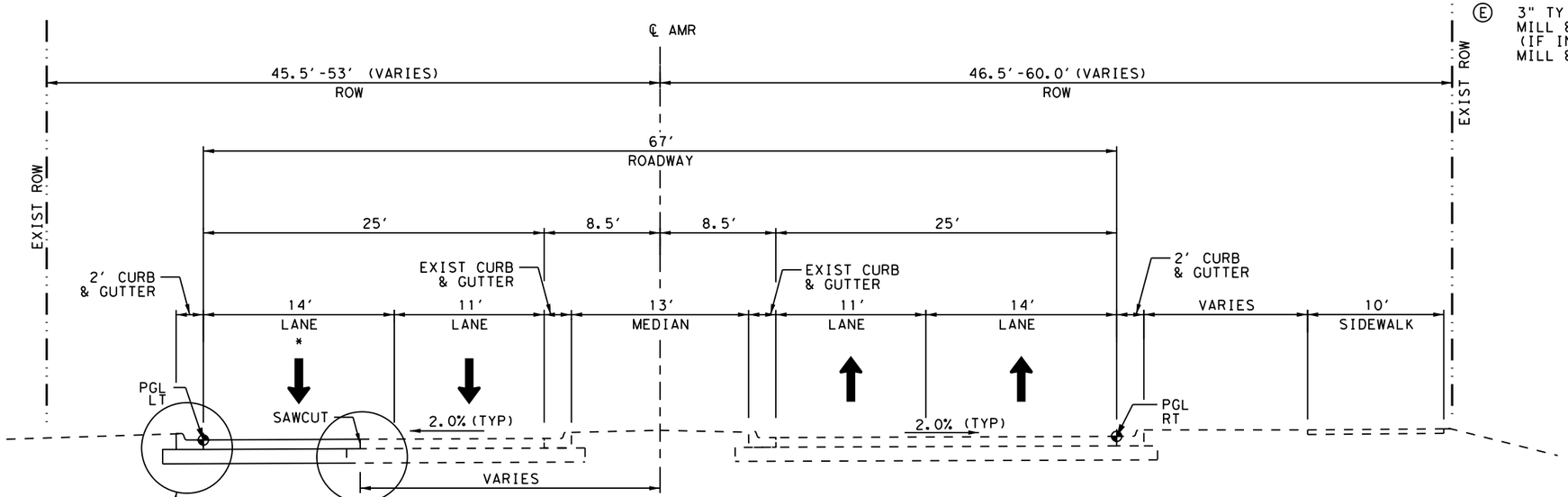


PROPOSED TYPICAL SECTION

STA 155+01.92 TO END OF PROJECT

* LIMITS OF MILL AND OVERLAY ARE STA 164+48.25 TO STA 167+63.00

NOTES:

1. SEE PLAN & PROFILE SHEETS FOR CURB TYPE, SAWCUT, AND MILL AND OVERLAY TRANSITIONS ALONG WITH OTHER ADDITIONAL INFORMATION.

| NO | DATE | ISSUES AND REVISIONS |
|---|---|---|

STATE OF TEXAS
AUSTIN S. HELTON
124922
LICENSED
PROFESSIONAL ENGINEER
8/5/2022


Kimley»Horn
F-928
10814 JOLLYVILLE ROAD
BLDG. 4, STE 200
AUSTIN, TX 78759
PHONE: 512-418-1771


# PROPOSED TYPICAL SECTIONS

SHEET 2 OF 2

ANDERSON MILL ROAD PHASE 2

CEDAR PARK



FILENAME: AMR*PROP*TYP*02.dgn
PLOTTED: 8/5/2022 3:20:00 PM

TCP SUMMARIES

| SPEC ITEM # | 6001 6002 | 641S | 803S-MO | 870S-A | 870S-A | 870S-B | 870S-B | 0512 6009 | 0512 6010 | 0512 6057 | 0512 6058 |
|---|---|---|---|---|---|---|---|---|---|---|---|
| ITEM DESCRIPTION | PORTABLE CHANGEABLE MESSAGE SIGN | STABILIZED CONTRUCTION EXIST | BARRICADES, SIGNS, AND TRAFFIC HANDLING | WORK ZONE PAVEMENT MARKINGS REMOVABLE 4 INW (SOLID) | WORK ZONE PAVEMENT MARKINGS REMOVABLE 8 INW (SOLID) | WORK ZONE PAVEMENT MARKINGS NON-REMOV 4 INW (SOLID) | WORK ZONE PAVEMENT MARKINGS NON-REMOV 8 INW (SOLID) | PORT CTB (FUR& INST) (LOW PROF) (TY1) | PORT CTB (FUR& INST) (LOW PROF) (TY2) | PORT CTB (REMOVE) (LOW PROF) (TY1) | PORT CTB (REMOVE) (LOW PROF) (TY2) |
| UNITS | EA | EA | MONTH | LF | LF | LF | LF | LF | LF | LF | LF |
| | | | | | | | | | | | |
| PHASE 1 | | | 5 | | | | | | | | |
| PHASE 2 | | | 5 | | | | | | | | |
| PHASE 3 | 3 | 4 | 2 | 36 | 109 | 36 | 109 | 660 | 80 | 660 | 80 |
| PHASE 5 | | | 2 | | | | | | | | |
| | | | | | | | | | | | |
| TOTAL | 3 | 4 | 14 | 36 | 109 | 36 | 109 | 660 | 80 | 660 | 80 |
| | | | * | | | | | | | | |

* REMOVAL OF EXISTING PAVEMENT MARKINGS SUBSIDIARY TO ITEM 803S-MO

** CONCRETE CURB SUBSIDIARY TO ITEM 433S-C ON RUBY QUARRY DRIVEWAY ONLY

*** SUBSIDIARY TO ITEM 101S-B

REMOVAL SUMMARIES

| SPEC ITEM # | 104S-A | 104S-C | 0496 6002 | 0496 6004 | 0496 6007 | 610S-R | |
|---|---|---|---|---|---|---|---|
| ITEM DESCRIPTION | REMOVE P.C CONCRETE CURB | REMOVE P.C. CONCRETE SIDEWALK | REMOV STR (INLET) | REMOV STR (SET) | REMOV STR (PIPE) | REMOVAL OF EXISTING TREES | REMOVE PED RAIL |
| UNITS | LF | SF | EA | EA | LF | EA | LF |
| | | | | | | | |
| ROADWAY | 328 | 4279 | 2 | 4 | 65 | 3 | 85 |
| | | | | | | | |
| TOTAL | 328 | 4279 | 2 | 4 | 65 | 3 | 85 |
| | *** | *** | *** | *** | *** | *** | *** |

ROADWAY SUMMARIES

| SPEC ITEM # | 101S-B | 111S-A | 132S-A | 210S-A | 306S | 315S-A | 340S-B | 340S-B | 430S-B | 430S-C | 432S-4 |
|---|---|---|---|---|---|---|---|---|---|---|---|
| ITEM DESCRIPTION | PREPARING RIGHT OF WAY | STREET EXCAVATION | EMBANKMENT | FLEXIBLE BASE 15" | PRIME COAT | SURFACE MILLING (2") | HOT MIX ASPH CONC PAVE, 3 IN TYPE D | HOT MIX ASPH CONC PAVE, 6 IN TYPE D | P.C.CONCRETE CURB & GUTTER (EXCAVATION) | P.C.CONCRETE CURB (EXCAVATION) | NEW P.C CONCRETE SIDEWALKS 4 INCH THICKNESS |
| UNITS | STA | CY | CY | CY | GAL | SY | SY | SY | LF | LF | SF |
| | | | | | | | | | | | |
| ROADWAY | 74 | 6179 | 859 | 4494 | 2157 | 1204 | 1204 | 8587 | 9842 | 53 | 20271 |
| | | | | | | | | | | | |
| TOTAL | 74 | 6179 | 859 | 4494 | 2157 | 1204 | 1204 | 8587 | 9842 | 53 | 20271 |

ROADWAY SUMMARIES CONT.

| SPEC ITEM # | 432S-RP-1 | 432S-PRC-3 | 433S-C | 433S-C | 434S | 0420 6066 | 0450 6030 | 0528 6004 |
|---|---|---|---|---|---|---|---|---|
| ITEM DESCRIPTION | P.C.SDWK CURB RAMP W/ PAVERS (TYPE I) | PEDESTRIAN ADA RAILING OPTION 3 (STANDARD 707S-3) | TYPE II P.C. CONC DRIVEWAY (7 INCH THICKNESS) | TYPE II P.C. CONC DRIVEWAY (8 INCH THICKNESS) | 4 IN P.C. CONCRETE MEDIAN AND ISLAND | CL C CONC (RAIL FOUNDATION) | RAIL (TYC221) | LANDSCAPE PAVERS |
| UNITS | EA | EA | SF | SF | SF | CY | LF | SY |
| | | | | | | | | |
| ROADWAY | 4 | 115 | 1414 | 4858 | 955 | 14 | 91 | 383 |
| | | | | | | | | |
| TOTAL | 4 | 115 | 1414 | 4858 | 955 | 14 | 91 | 383 |
| | | | ** | | | | | |

SIGNING AND PAVEMENT MARKING SUMMARIES

| SPEC ITEM # | 0658 6048 | 824S | 824S |
|---|---|---|---|
| ITEM DESCRIPTION | INSTL DEL ASSM (OM-2Z) (FLX) GND | REMOVE EXIST TRAFFIC SIGNS | TRAFFIC SIGNS (RELOCATE) |
| UNITS | EA | EA | EA |
| | | | |
| SIGNING AND MARKING | 1 | 8 | 8 |
| | | | |
| TOTAL | 1 | 8 | 8 |

SIGNING AND PAVEMENT MARKING SUMMARIES CONT.

| SPEC ITEM # | 824S | 863S-2 | 863S-5 | 871S-A | 871S-A | 871S-B | 871S-D | 875S-A | 875S-A | 875S-B | 875S-D |
|---|---|---|---|---|---|---|---|---|---|---|---|
| ITEM DESCRIPTION | TRAFFIC SIGNS | REFLECTORIZED PAVEMENT MARKINGS (TYPE I-C) | REFLECTORIZED PAVEMENT MARKINGS (TYPE II-C-R) | REFL TYPE 1 THERMO PVMT MRK 4" IN 100 MILS S (W BROKEN) | REFL TYPE 1 THERMO PVMT MRK 8" IN 100 MILS S (W SOLID) | REFL TYPE 1 THERMO PVMT MRK 24" IN 100 MILS S (W WORDS) | REFL TYPE 1 THERMO PVMT MRK 24" IN 100 MILS S (W SYMBOLS) | PAVEMENT SURFACE PREPARATION (4") (ASPHALT) | PAVEMENT SURFACE PREPARATION (8") (ASPHALT) | PAVEMENT SURFACE PREPARATION (WORDS) (ASPHALT) | PAVEMENT SURFACE PREPARATION (SYMBOLS) (ASPHALT) |
| UNITS | EA | EA | EA | LF | LF | EA | EA | LF | LF | EA | EA |
| | | | | | | | | | | | |
| SIGNING AND MARKING | 1 | 34 | 94 | 1940 | 732 | 6 | 6 | 1940 | 732 | 6 | 6 |
| | | | | | | | | | | | |
| TOTAL | 1 | 34 | 94 | 1940 | 732 | 6 | 6 | 1940 | 732 | 6 | 6 |

ISSUES AND REVISIONS

| NO | DATE |
|---|---|

Kimley»Horn F-928
10814 JOLLYVILLE ROAD
BLDG. 4, STE 200
AUSTIN, TX 78759
PHONE: 512-418-1771

QUANTITY SUMMARIES

SHEET 1 OF 2
ANDERSON MILL ROAD PHASE 2

CEDAR PARK



FILENAME: AMR*SUM*01.dgn
PLOTTED: 8/5/2022 3:20:10 PM

SUMMARIES CONT.

ILLUMINATION SUMMARIES

| SPEC ITEM # | 0416 6029 | 0610 6002 | 0618 6023 | 0618 6024 | 0620 6007 | 0620 6008 | 0624 6002 | 0624 6010 | 0628 6001 |
|---|---|---|---|---|---|---|---|---|---|
| ITEM DESCRIPTION | DRILL SHAFT (RDWY ILL POLE) (30 IN) | RELOCATE RD IL ASM (SHOE-BASE) | CONDT (PVC) (SCH 40) (2") | CONDT (PVC) (SCH 40) (2") (BORE) | ELEC CONDR (NO. 8) BARE | ELEC CONDR (NO. 8) INSULATED | GROUND BOX TY A (122311) W/APRON | GROUND BOX TY D (162922) W/APRON | RELOCATE ELECTRICAL SERVICES |
| UNITS | LF | EA | LF | LF | LF | LF | EA | EA | EA |
| | | | | | | | | | |
| ILLUMINATION | 30 | 3 | 575 | 130 | 710 | 1420 | 3 | 1 | 1 |
| | | | | | | | | | |
| TOTAL | 30 | 3 | 575 | 130 | 710 | 1420 | 3 | 1 | 1 |

DRAINAGE SUMMARIES

| SPEC ITEM # | 0465 6333 | 0465 6334 | 506S 4 | 506S M4 | 506S M5 | 506S J-4X4 | 506S J-5X5 | 508S-SET | 509S-1 | 510-ASD-18DIA | 510-ASD-36DIA |
|---|---|---|---|---|---|---|---|---|---|---|---|
| ITEM DESCRIPTION | INLET (COMPL) (TY IR)(10') | INLET (COMPL) (TY IIR)(10') | MINOR MANHOLE HEIGHT ADJUSTMENT ALL DIA. | STANDARD PRE-CAST MANHOLE W PRE-CAST BASE, 4FT. DIA | STANDARD PRE-CAST MANHOLE W PRE-CAST BASE, 5FT. DIA | JUNCTION BOX 4FT X 4FT | JUNCTION BOX 5FT X 5FT | SAFETY END TREATMENT TYPE II SIZE 36 INCH | TRENCH EXCAV SAFETY PROTECTIVE SYSTEMS (ALL DEPTHS) | PIPE,18"DIA CL II IRCP TYPE (ALL DEPTHS) INCLUDING EXCAV/BACKF | PIPE,36"DIA CL II IRCP TYPE (ALL DEPTHS) INCLUDING EXCAV/BACKF |
| UNITS | EA | EA | EA | EA | EA | EA | EA | EA | LF | LF | LF |
| | | | | | | | | | | | |
| DRAINAGE | 4 | 19 | 3 | 1 | 1 | 2 | 2 | 1 | 1200 | 1182 | 54 |
| | | | | | | | | | | | |
| TOTAL | 4 | 19 | 3 | 1 | 1 | 2 | 2 | 1 | 1200 | 1182 | 54 |

UTILITY SUMMARIES

| SPEC ITEM # | 505S-B-24 | 510-AWRJ-8DIA | 510-AWRJ-10DIA | 510-AWRJ-12DIA | 510-AW-6DIA | 510-JW-8X6 | 510-JW-8X8 | 510-JW-10X6 | 510-JW-10X10 | 510-KW |
|---|---|---|---|---|---|---|---|---|---|---|
| ITEM DESCRIPTION | ENCASEMENT PIPE, 24" DIA STEEL, MIN 1/2" THICK | RESTRAINED PIPE 8" DIA PVC (ALL DEPTHS) INCLUDING EXC AND EMBANK | RESTRAINED PIPE 10" DIA PVC (ALL DEPTHS) INCLUDING EXC AND EMBANK | RESTRAINED PIPE 12" DIA PVC (ALL DEPTHS) INCLUDING EXC AND EMBANK | PIPE 6" DIA DUCTILE IRON (ALL DEPTHS) INCLUDING EXC AND EMBANK | WET CONNECTIONS 8" DIA X 6" DIA | WET CONNECTIONS 8" DIA X 8" DIA | WET CONNECTIONS 10" DIA X 6" DIA | WET CONNECTIONS 10" DIA X 10" DIA | DUCTILE IRON FITTINGS |
| UNITS | LF | LF | LF | LF | LF | EA | EA | EA | EA | TON |
| | | | | | | | | | | |
| UTILITIES | 10 | 45 | 20 | 242 | 53 | 1 | 1 | 10 | 4 | 0.14 |
| | | | | | | | | | | |
| TOTAL | 10 | 45 | 20 | 242 | 53 | 1 | 1 | 10 | 4 | 0.14 |

UTILITY SUMMARIES CONT.

| SPEC ITEM # | 511S-A | 511S-B |
|---|---|---|
| ITEM DESCRIPTION | VALVES RESILIENT SEATED GATE TYP 6" DIA | FIRE HYDRANTS |
| UNITS | EA | EA |
| | | |
| UTILITIES | 11 | 11 |
| | | |
| TOTAL | 11 | 11 |

EROSION CONTROL SUMMARIES

| SPEC ITEM # | 602S-A | 604S-D | 609S-A | 609S-F | 628S-D | 642S |
|---|---|---|---|---|---|---|
| ITEM DESCRIPTION | BERMUDA BLOCK SODDING | NATIVE SEEDING FOR EROSION CONTROL METHOD | TOPSOIL (4" AND SEEDBED PREPARATION | WATERING | FILTER CURB INLET PROTECTION | SEDIMENT CONTROL FENCE |
| UNITS | SY | SY | SY | KG | LF | LF |
| | | | | | | |
| EROSION CONTROL | 26 | 32534 | 32534 | 977 | 504 | 2247 |
| | | | | | | |
| TOTAL | 26 | 32534 | 32534 | 977 | 504 | 2247 |

▲ ADDITIONAL MILL, OVERLAY AND STRIPING

| SPEC ITEM # | 307S | 315S-A | 340S-B | 863S-2 | 863S-5 | 871S-A | 871S-A | 871S-A | 871S-A | 871S-B |
|---|---|---|---|---|---|---|---|---|---|---|
| ITEM DESCRIPTION | TACK COAT | SURFACE MILLING (2") | HOT MIX ASPH CONC PAVE, 2 IN TYPE D | REFLECTORIZED PAVEMENT MARKINGS (TYPE I-C) | REFLECTORIZED PAVEMENT MARKINGS (TYPE II-C-R) | REFL TYPE 1 THERMO PAV MRK 4" IN WIDTH 100 MILS WHITE | REFL TYPE 1 THERMO PAV MRK 4" IN WIDTH 100 MILS WHITE | REFL TYPE 1 THERMO PAV MRK 8" IN WIDTH 100 MILS WHITE | REFL TYPE 1 THERMO PAV MRK WORD WIDTH 100 MILS WHITE | REFL TYPE 1 THERMO PAV MRK ARROW WIDTH 100 MILS WHITE |
| UNITS | G | SY | SY | EA | EA | LF | LF | LF | EA | EA |
| | | | | | | | | | | |
| ROADWAY | 1727 | 8634 | 8634 | 33 | 34 | 2660 | 400 | 9800 | 970 | 4 |
| | | | | | | | | | | |
| TOTAL | 1727 | 8634 | 8634 | 33 | 34 | 2660 | 400 | 9800 | 970 | 4 |

BASIS OF ESTIMATE

| ITEM | DESCRIPTION | RATE |
|---|---|---|
| 306S | PRIME COAT | 0.2 GAL/SY |
| 307S | TACK COAT | 0.2 GAL/SY |
| 340S-B | HOT MIX ASPHALTIC CONCRETE PAVEMENT, TYPE D | 110 LBS/(IN*SY) |
| 609S-F | WATERING | 10G/SY (3 APPLICATIONS) |

▲ THESE QUANITITES ARE FOR THE ADDITIONAL MILL, OVERLAY AND RESTRIPING OF EXISTING PAVEMENT NOT SHOWN IN THESE PLANS FROM APPROX 650' NORTH OF ZEPPELIN DRIVE TO END OF PROJECT NOT SHOWN IN THE PLANS

| NO | DATE | ISSUES AND REVISIONS |
|---|---|---|

Kimley»Horn F-928
10814 JOLLYVILLE ROAD
BLDG. 4, STE 200
AUSTIN, TX 78759
PHONE: 512-418-1771

QUANTITY SUMMARIES

SHEET 2 OF 2

ANDERSON MILL ROAD PHASE 2

CEDAR PARK



FILENAME: AMR*SUM*02.dgn
PLOTTED: 8/5/2022 3:20:18 PM

SEQUENCE OF CONSTRUCTION

PHASE 1:

1. PLACE CHANNELIZING DEVICES AS SHOWN IN THE PLANS.
2. PLACE TEMPORARY EROSION CONTROL DEVICES AS SHOWN IN PLANS
3. REMOVE EXISTING PAVEMENT MARKINGS IN CONFLICT. COVER EXISTING SIGNS IN CONFLICT WITH WORK ZONE SIGNING.
4. UTILIZING EXISTING PAVEMENT, SHIFT ANDERSON MILL ROAD TRAFFIC ONTO NORTHBOUND PAVEMENT AS SHOWN IN PLANS.
5. CONSTRUCT PROPOSED STORM SEWER SYSTEM ON SOUTHBOUND SIDE AS SHOWN IN PLANS.
6. RELOCATE EXISTING LUMINAIRES AND ELECTRICAL SERVICE AS SHOWN IN PLANS.
7. CONSTRUCT PROPOSED CURB AND GUTTER AND DRIVEWAYS AS SHOWN IN PLANS.
8. CONTRACTOR TO MAINTAIN ACCESS TO PROPERTIES AT ALL TIMES.
9. MILL 3" OF SURFACE AS SHOWN IN PLANS.
10. SAWCUT EXISTING HMAC 0.5' INSIDE SOUTHBOUND EXISTING EDGE OF PAVEMENT.
11. WIDEN NORTHBOUND PAVEMENT EXCEPT FOR FINAL 3" TY D HMAC.
12. APPLY FINAL 3" TY D HMAC SURFACE OVER MILLED AND WIDENED PAVMENT.
13. INSTALL FINAL SOUTHBOUND PAVEMENT MARKINGS.

PHASE 2:

1. PLACE CHANNELIZING DEVICES AS SHOWN IN THE PLANS.
2. ADJUST TEMPORARY EROSION CONTROL DEVICES AS SHOWN IN PLANS
3. REMOVE EXISTING PAVEMENT MARKINGS IN CONFLICT. COVER EXISTING SIGNS IN CONFLICT WITH WORK ZONE SIGNING.
4. UTILIZING EXISTING AND PHASE 1 PAVEMENT, SHIFT ANDERSON MILL ROAD TRAFFIC AS SHOWN IN PLANS.
5. CONSTRUCT PROPOSED STORM SEWER SYSTEM ON NORTHBOUND SIDE AS SHOWN IN PLANS.
6. RELOCATE EXISTING LUMINAIRES AS SHOWN IN PLANS.
7. CONSTRUCT PROPOSED CURB AND GUTTER, SIDEWALK, RAMP, AND DRIVEWAYS AS SHOWN IN PLANS.
8. CONTRACTOR TO MAINTAIN ACCESS TO PROPERTIES AT ALL TIMES.
9. MILL 3" OF SURFACE AS SHOWN IN PLANS.
10. SAWCUT EXISTING HMAC 0.5' INSIDE NORTHBOUND EXISTING EDGE OF PAVEMENT.
11. WIDEN NORTHBOUND PAVEMENT EXCEPT FOR FINAL 3" TY D HMAC.
12. APPLY FINAL 3" TY D HMAC SURFACE OVER MILLED AND WIDENED PAVMENT.
13. INSTALL FINAL NORTHBOUND PAVEMENT MARKINGS FROM STA 144+61.92 TO END OF PROJECT.

PHASE 3:

1. PLACE CHANNELIZING DEVICES AND LOW PROFILE BARRIER AS SHOWN IN THE PLANS.
2. ADJUST TEMPORARY EROSION CONTROL DEVICES AS SHOWN IN PLANS
3. REMOVE EXISTING PAVEMENT MARKINGS IN CONFLICT. COVER EXISTING SIGNS IN CONFLICT WITH WORK ZONE SIGNING.
4. UTILIZING EXISTING, PHASE 1 AND PHASE 2 PAVEMENT, SHIFT ANDERSON MILL ROAD TRAFFIC AS SHOWN IN PLANS.
5. CONSTRUCT REMAINING PROPOSED STORM SEWER SYSTEM AS SHOWN IN PLANS.
6. CONSTRUCT CONCRETE, BRICK PAVER, AND GRASS MEDIAN AS SHOWN IN PLANS.

PHASE 4:

1. INSTALL FINAL SIGNING AND REMAINING FINAL PAVEMENT MARKINGS AND OPEN TO TRAFFIC UNRESTRICTED.

PHASE 5:

1. REMOVE CURB RAMPS AND CONSTRUCT PROPOSED CURB AS SHOWN IN PLANS AT THE INTERSECTION OF LIME CREEK ROAD AND ANDERSON MILL ROAD. UTILIZE CITY OF AUSTIN TCP DETAIL 804S-1A FOR LANE CLOSURES AS NECESSARY.
2. CONSTRUCT PROPOSED SIDEWALK ALONG THE EAST SIDE OF ANDERSON MILL AS SHOWN IN PLANS BETWEEN ZEPPELIN DRIVE AND LIME CREEK ROAD. UTILIZE CITY OF AUSTIN TCP DETAIL 804S-1A FOR LANE CLOSURES AS NECESSARY.
3. CONSTRUCT RAIL IMPROVEMENTS AT GASPAR BEND INTERSECTION AS SHOWN IN PLANS. UTILIZE CITY OF AUSTIN TCP DETAIL 804S-1A FOR LANE CLOSURES AS NECESSARY.
4. INSTALL FINAL SEEDING.
5. PERFORM FINAL CLEANUP.

| NO | DATE | ISSUES AND REVISIONS |
|---|---|---|

STATE OF TEXAS
AUSTIN S. HELTON
124922
LICENSED
PROFESSIONAL ENGINEER

8/5/2022

Kimley»Horn F-928
10814 JOLLYVILLE ROAD
BLDG. 4, STE 200
AUSTIN, TX 78759
PHONE: 512-418-1771

TRAFFIC CONTROL NARRATIVE

SHEET 1 OF 1
ANDERSON MILL ROAD PHASE 2

CEDAR PARK



FILENAME: AMR-TCP-NARR.dgn
PLOTTED: 8/5/2022 3:20:26 PM

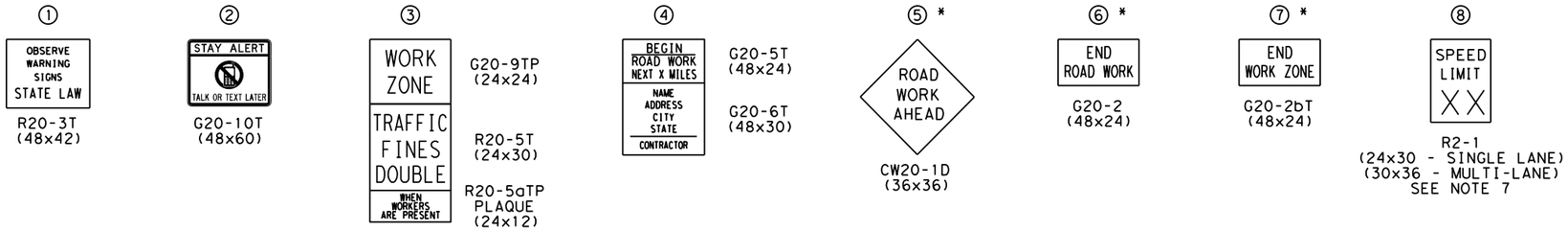


NOTES:

1. CONTRACTOR SHALL PLACE ADVANCE WARNING SIGNS ACCORDING TO DISTANCE "X" ON STANDARDS 804S-1.
2. CONTRACTOR SHALL FIELD VERIFY POSTED SPEED FOR "X" SPACING.
3. SIGN LOCATIONS MAY BE ADJUSTED DUE TO CONDITIONS AS APPROVED BY THE ENGINEER.
4. CONFLICTING SIGNS SHALL BE COVERED BY CONTRACTOR OR AS DIRECTED BY THE ENGINEER.
5. SIGNS SHOWN SHALL BE COORDINATED WITH SPECIFIC WORK TRAFFIC CONTROL DETAILS INCLUDED IN THE PLANS.
6. SIGNS 5 & 6 TO BE MOVED AND PLACED ONLY IN ADVANCE OF WHERE WORK IS BEING PERFORMED.
7. SIGN 8 SHALL DISPLAY APPROPRIATE SPEED LIMIT IN PLACE OF "XX".

**LEGEND**

- CONSTRUCTION WARNING SIGN
- TRAFFIC FLOW
- WORK ZONE

| POSTED SPEED | LONGITUDINAL BUFFER SPACE "Y" DISTANCE |
|---|---|
| MPH | FT (APPROX) |
| 30 | 90 |
| 35 | 120 |
| 40 | 155 |
| 45 | 195 |
| 50 | 240 |
| 55 | 295 |
| 60 | 350 |
| 65 | 410 |
| 70 | 475 |

* SEE NOTE 6 FOR TYPICAL USE OF SIGNS 5 & 6

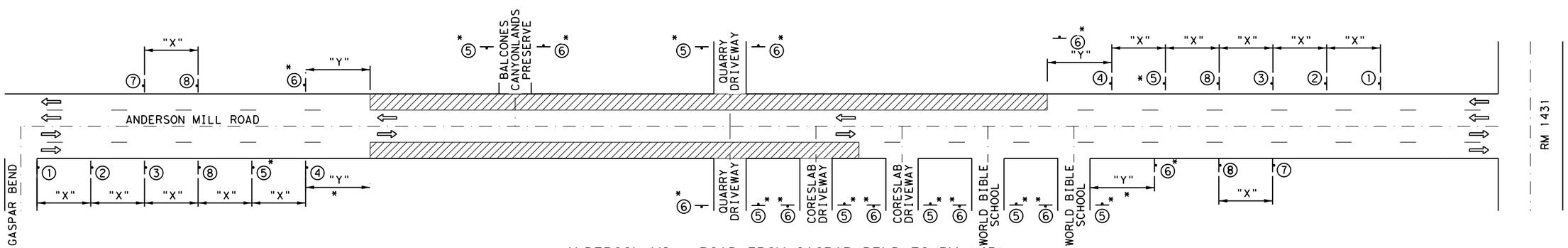


ANDERSON MILL ROAD FROM GASPAR BEND TO RM 1431

| NO | DATE | ISSUES AND REVISIONS |
|---|---|---|

STATE OF TEXAS
AUSTIN S. HELTON
124922
LICENSED
PROFESSIONAL ENGINEER
8/5/2022

Kimley»Horn F-928
10814 JOLLYVILLE ROAD
BLDG. 4, STE 200
AUSTIN, TX 78759
PHONE: 512-418-1771

# ADVANCED WARNING SIGNS

SHEET 1 OF 1
ANDERSON MILL ROAD PHASE 2

CEDAR PARK



FILENAME: AMR*TCP*AWS.dgn
PLOTTED: 8/5/2022 3:20:33 PM

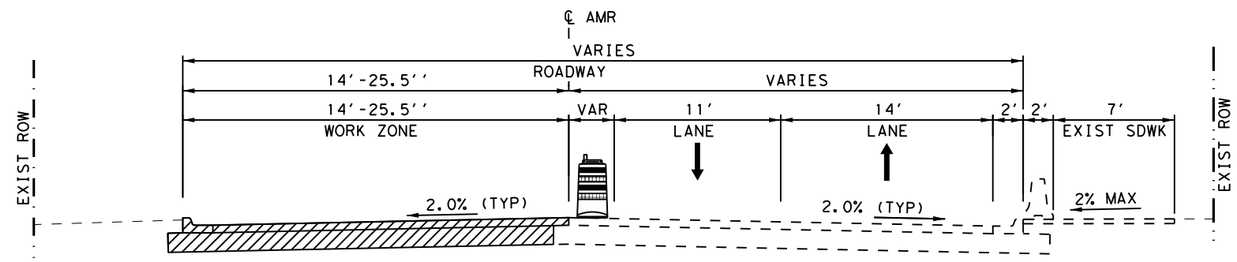


PHASE 1 TYPICAL SECTION

BEGIN PROJECT TO STA.136+20.57

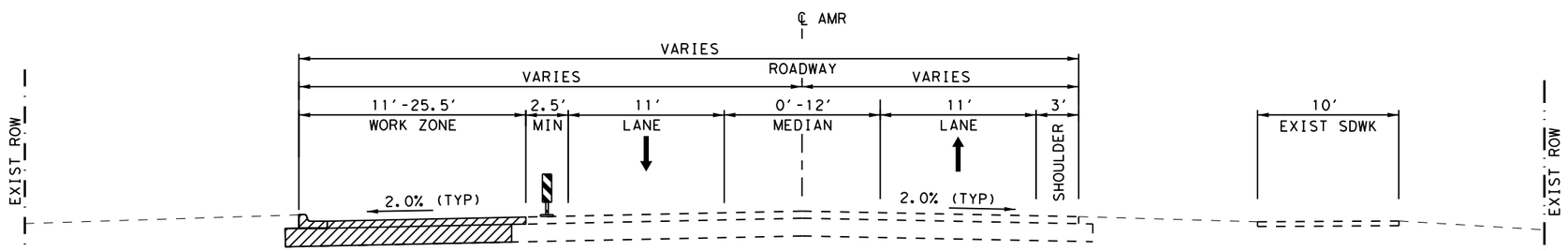


PHASE 1 TYPICAL SECTION

STA. 136+20.57 TO STA. 144+56.92

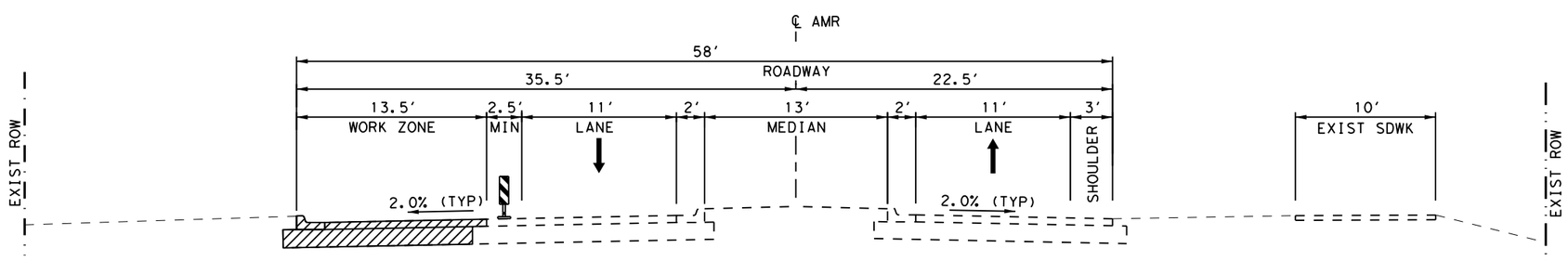


PHASE 1 TYPICAL SECTION

STA. 144+56.92 TO END OF PROJECT

## LEGEND

- EXIST ROW
- EXIST EASEMENT
- PROP SAWCUT
- CONSTRUCTION PREVIOUS PHASE
- CONSTRUCTION THIS PHASE
- TYPE III BARRICADE
- CHANNELIZING DEVICES
- TRAFFIC MOVEMENT

0 20 40

NOTES:

1. DIMENSIONS, STATIONS AND OFFSETS GIVEN AT BACK OF CURB UNLESS OTHERWISE NOTED.
2. WHERE BUFFER BETWEEN LANE LINE AND WORK ZONES IS LESS THREE (3) FEET VERTICAL PANELS MAY BE USED AS CHANNELIZING DEVICES.
3. LOCATION OF EXISTING UTILITES SHOWN ARE APPROXIMATE. CONTRACTOR TO CONFIRM IN THE FIELD PRIOR TO CONSTRUCTION.
4. REFER TO ROADWAY PLAN AND PROFILE SHEETS FOR MORE INFORMATION.

| NO | DATE | ISSUES AND REVISIONS |
|---|---|---|

STATE OF TEXAS
AUSTIN S. HELTON
124922
LICENSED
PROFESSIONAL ENGINEER
8/5/2022


Kimley»Horn F-928
10814 JOLLYVILLE ROAD
BLDG. 4, STE 200
AUSTIN, TX 78759
PHONE: 512-418-1771


# TRAFFIC CONTROL TYPICALS PHASE 1

SHEET 1 OF 2

ANDERSON MILL ROAD PHASE 2

CEDAR PARK



FILENAME: AMR*TCP*TYP*01.dgn
PLOTTED: 8/5/2022 3:20:45 PM

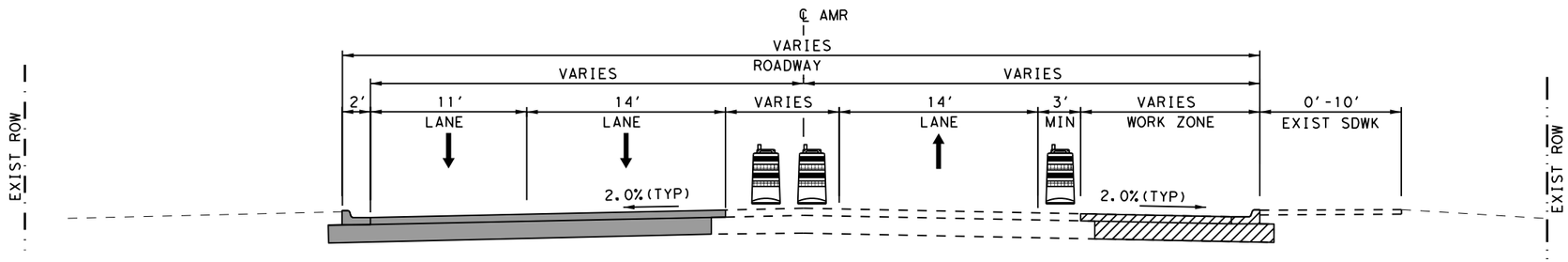


PHASE 2 TYPICAL SECTION

136+18.00 TO STA. 143+60.98

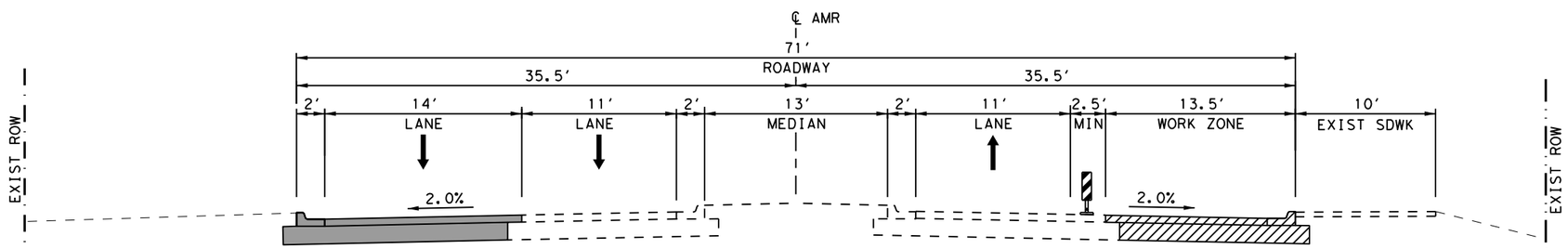


PHASE 2 TYPICAL SECTION

STA. 147+04.00 TO STA. 155+01.92

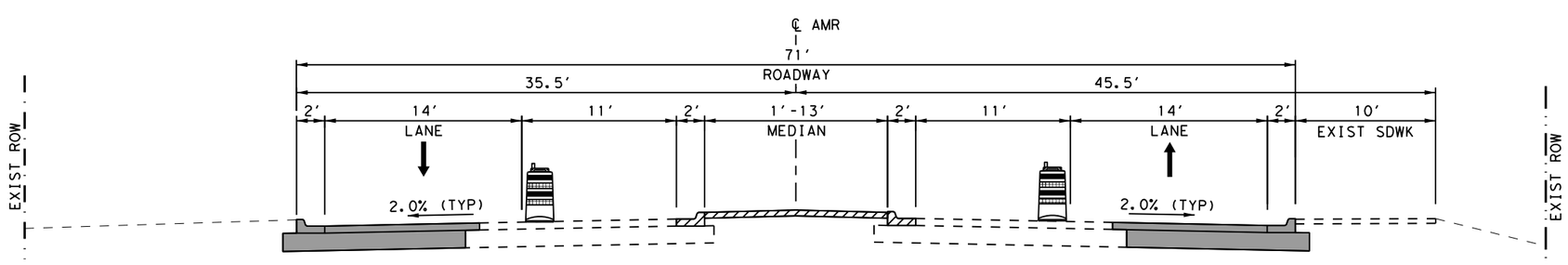


PHASE 3 TYPICAL SECTION

BEGIN PROJECT TO STA. 144+56.92

## LEGEND

- EXIST ROW
- EXIST EASEMENT
- PROP SAWCUT
- CONSTRUCTION PREVIOUS PHASE
- CONSTRUCTION THIS PHASE
- TYPE III BARRICADE
- CHANNELIZING DEVICES
- TRAFFIC MOVEMENT

0 20 40

NOTES:

1. DIMENSIONS, STATIONS AND OFFSETS GIVEN AT BACK OF CURB UNLESS OTHERWISE NOTED.
2. WHERE BUFFER BETWEEN LANE LINE AND WORK ZONES IS LESS THREE (3) FEET VERTICAL PANELS MAY BE USED AS CHANNELIZING DEVICES.
3. LOCATION OF EXISTING UTILITES SHOWN ARE APPROXIMATE. CONTRACTOR TO CONFIRM IN THE FIELD PRIOR TO CONSTRUCTION.
4. REFER TO ROADWAY PLAN AND PROFILE SHEETS FOR MORE INFORMATION.

| NO | DATE | ISSUES AND REVISIONS |
|---|---|---|

STATE OF TEXAS
AUSTIN S. HELTON
124922
LICENSED
PROFESSIONAL ENGINEER
8/5/2022


Kimley»Horn F-928
10814 JOLLYVILLE ROAD
BLDG. 4, STE 200
AUSTIN, TX 78759
PHONE: 512-418-1771


# TRAFFIC CONTROL TYPICALS
## PHASE 2 & PHASE 3
SHEET 2 OF 2
ANDERSON MILL ROAD PHASE 2

CEDAR PARK



FILENAME: AMR*TCP*TYP*02.dgn
PLOTTED: 8/5/2022 3:20:52 PM

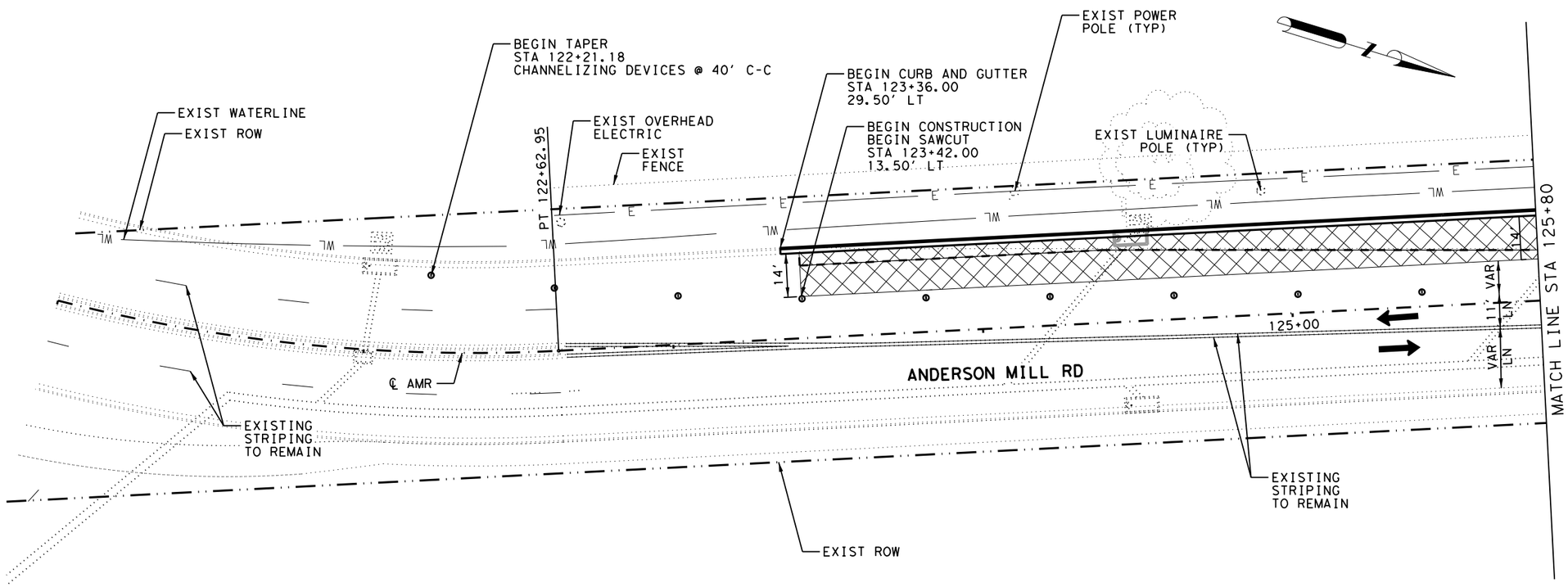


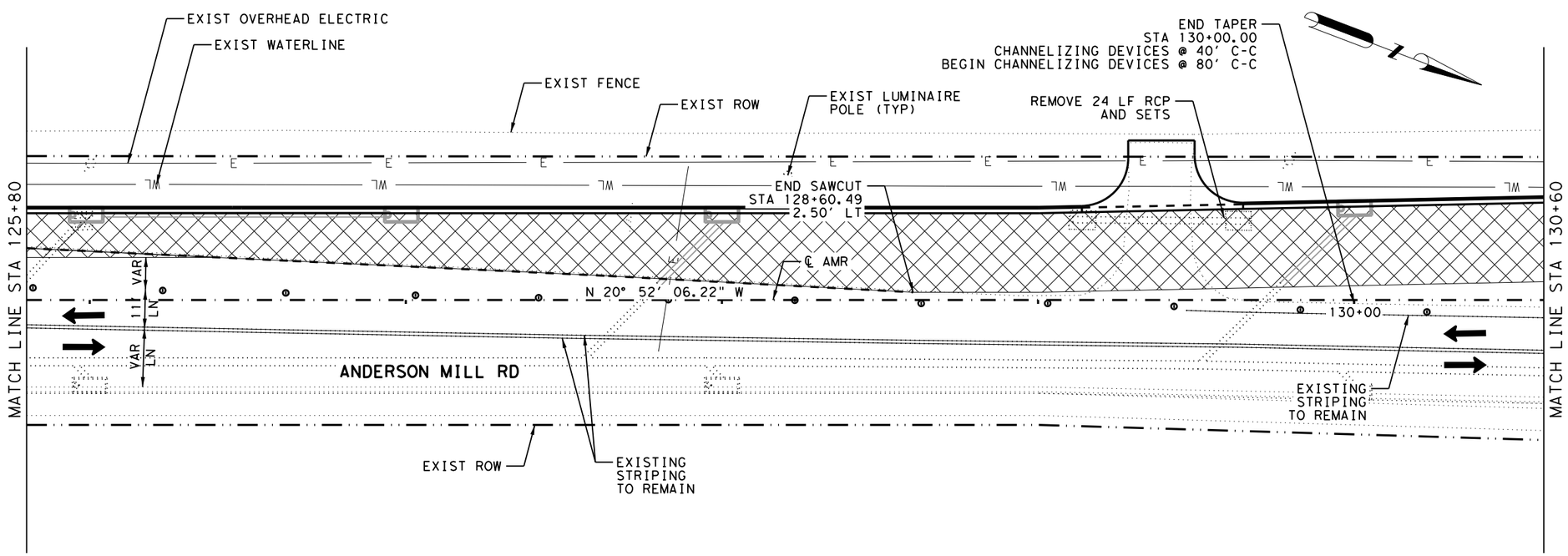


## LEGEND

- EXIST ROW
- EXIST EASEMENT
- PROP SAWCUT
- CONSTRUCTION PREVIOUS PHASE
- CONSTRUCTION THIS PHASE
- TYPE III BARRICADE
- CHANNELIZING DEVICES
- TRAFFIC MOVEMENT

0 20 40

NOTES:

1. DIMENSIONS, STATIONS AND OFFSETS GIVEN AT BACK OF CURB UNLESS OTHERWISE NOTED.
2. WHERE BUFFER BETWEEN LANE LINE AND WORK ZONES IS LESS THREE (3) FEET VERTICAL PANELS MAY BE USED AS CHANNELIZING DEVICES.
3. LOCATION OF EXISTING UTILITES SHOWN ARE APPROXIMATE. CONTRACTOR TO CONFIRM IN THE FIELD PRIOR TO CONSTRUCTION.
4. REFER TO ROADWAY PLAN AND PROFILE SHEETS FOR MORE INFORMATION.

| NO | DATE | ISSUES AND REVISIONS |
|---|---|---|

STATE OF TEXAS
AUSTIN S. HELTON
124922
LICENSED
PROFESSIONAL ENGINEER
8/5/2022

Kimley»Horn F-928
10814 JOLLYVILLE ROAD
BLDG. 4, STE 300
AUSTIN, TX 78759
PHONE: 512-418-1771

# TRAFFIC CONTROL PLANS PHASE 1

SHEET 1 OF 6

ANDERSON MILL ROAD PHASE 2

CEDAR PARK



FILENAME: AMR*TCP*PH1*01.dgn
PLOTTED: 8/5/2022 3:21:31 PM

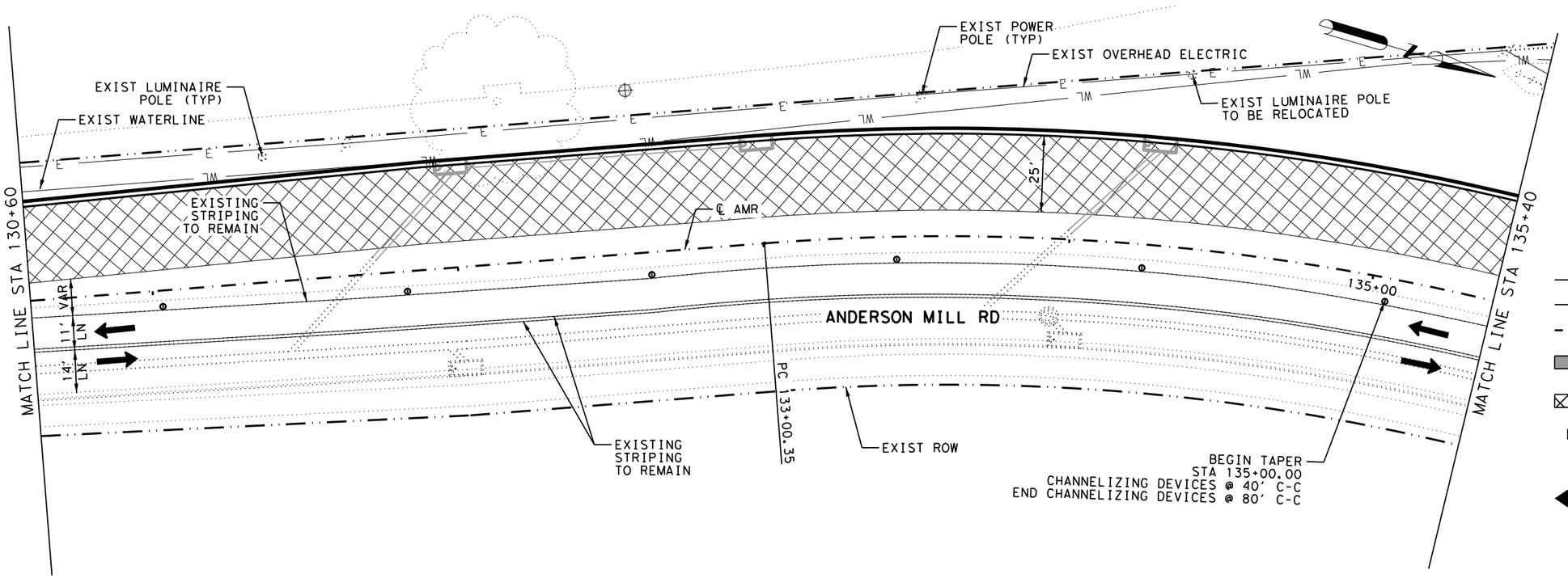


## LEGEND

- EXIST ROW
- EXIST EASEMENT
- PROP SAWCUT
- CONSTRUCTION PREVIOUS PHASE
- CONSTRUCTION THIS PHASE
- TYPE III BARRICADE
- CHANNELIZING DEVICES
- TRAFFIC MOVEMENT

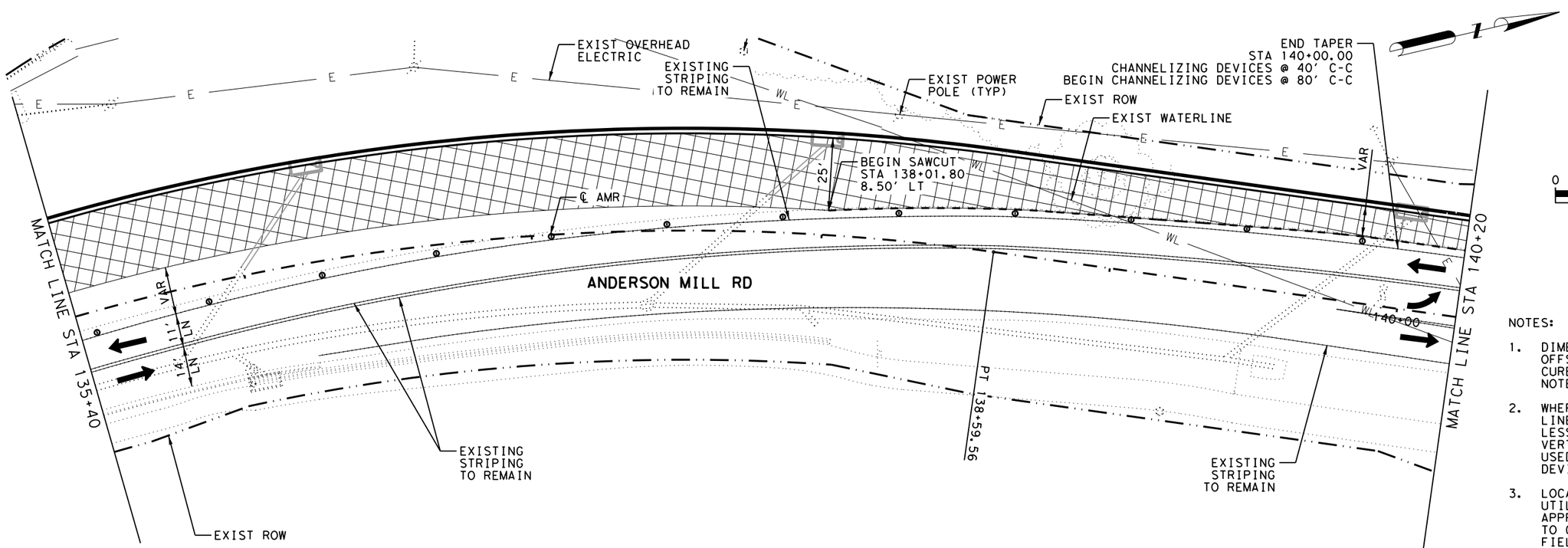


0 20 40

NOTES:

1. DIMENSIONS, STATIONS AND OFFSETS GIVEN AT BACK OF CURB UNLESS OTHERWISE NOTED.
2. WHERE BUFFER BETWEEN LANE LINE AND WORK ZONES IS LESS THREE (3) FEET VERTICAL PANELS MAY BE USED AS CHANNELIZING DEVICES.
3. LOCATION OF EXISTING UTILITES SHOWN ARE APPROXIMATE. CONTRACTOR TO CONFIRM IN THE FIELD PRIOR TO CONSTRUCTION.
4. REFER TO ROADWAY PLAN AND PROFILE SHEETS FOR MORE INFORMATION.

| NO | DATE | ISSUES AND REVISIONS |
|---|---|---|

STATE OF TEXAS
AUSTIN S. HELTON
124922
LICENSED
PROFESSIONAL ENGINEER
8/5/2022

Kimley»Horn F-928
10814 JOLLYVILLE ROAD
BLDG. 4, STE 300
AUSTIN, TX 78759
PHONE: 512-418-1771

# TRAFFIC CONTROL PLAN PHASE 1

SHEET 2 OF 6

ANDERSON MILL ROAD PHASE 2

CEDAR PARK



FILENAME: AMR*TCP*PH1*02.dgn
PLOTTED: 8/5/2022 3:21:46 PM

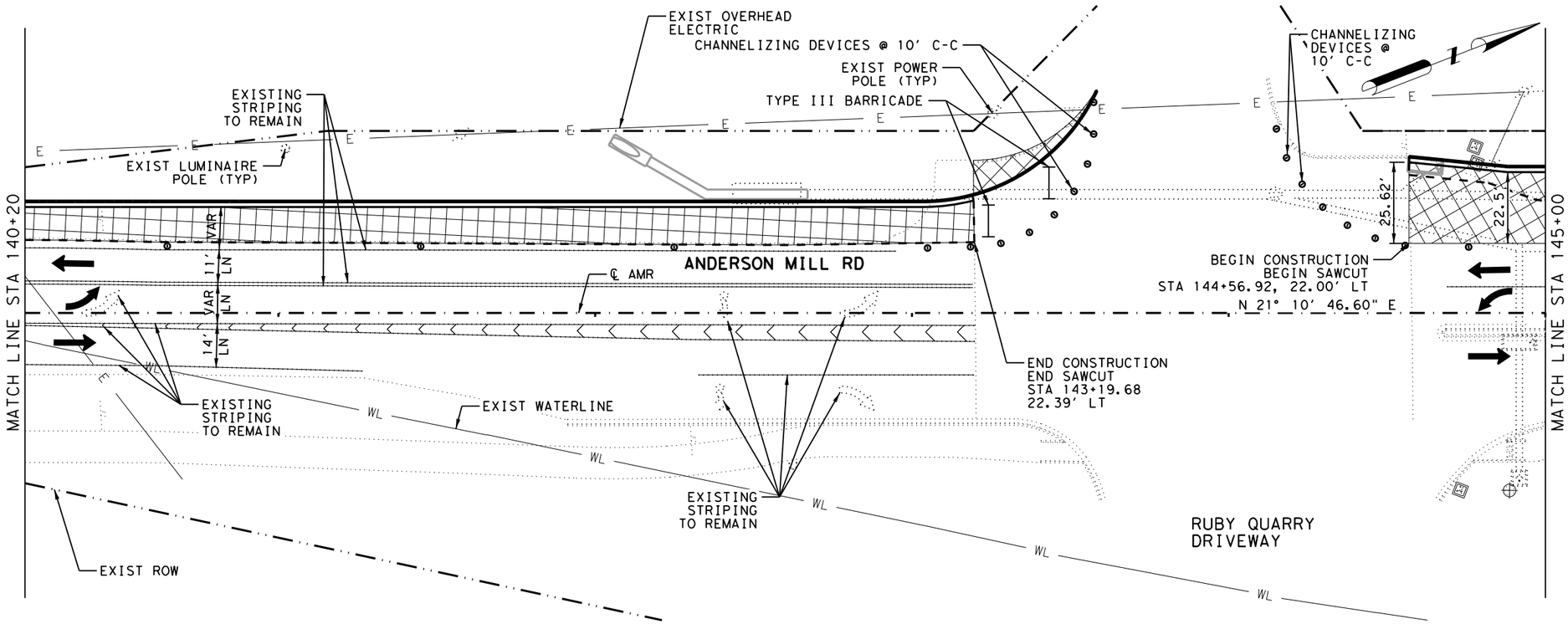


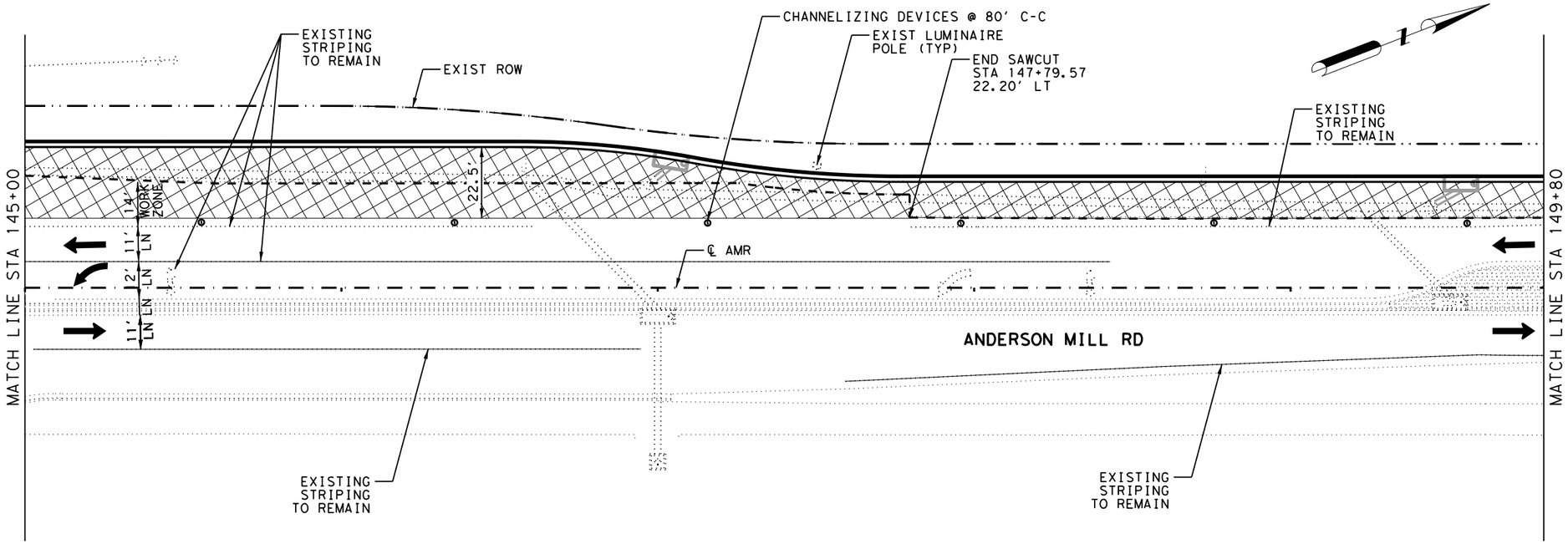


## LEGEND

- EXIST ROW
- EXIST EASEMENT
- PROP SAWCUT
- CONSTRUCTION PREVIOUS PHASE
- CONSTRUCTION THIS PHASE
- TYPE III BARRICADE
- CHANNELIZING DEVICES
- TRAFFIC MOVEMENT

0 20 40

NOTES:

1. DIMENSIONS, STATIONS AND OFFSETS GIVEN AT BACK OF CURB UNLESS OTHERWISE NOTED.
2. WHERE BUFFER BETWEEN LANE LINE AND WORK ZONES IS LESS THREE (3) FEET VERTICAL PANELS MAY BE USED AS CHANNELIZING DEVICES.
3. LOCATION OF EXISTING UTILITES SHOWN ARE APPROXIMATE. CONTRACTOR TO CONFIRM IN THE FIELD PRIOR TO CONSTRUCTION.
4. REFER TO ROADWAY PLAN AND PROFILE SHEETS FOR MORE INFORMATION.

| NO | DATE | ISSUES AND REVISIONS |
|---|---|---|

STATE OF TEXAS
AUSTIN S. HELTON
124922
LICENSED
PROFESSIONAL ENGINEER
8/5/2022

Kimley»Horn F-928
10814 JOLLYVILLE ROAD
BLDG. 4, STE 300
AUSTIN, TX 78759
PHONE: 512-418-1771

# TRAFFIC CONTROL PLAN PHASE 1

SHEET 3 OF 6

ANDERSON MILL ROAD PHASE 2

CEDAR PARK



FILENAME: AMR*TCP*PH1*03.dgn
PLOTTED: 8/5/2022 3:21:57 PM

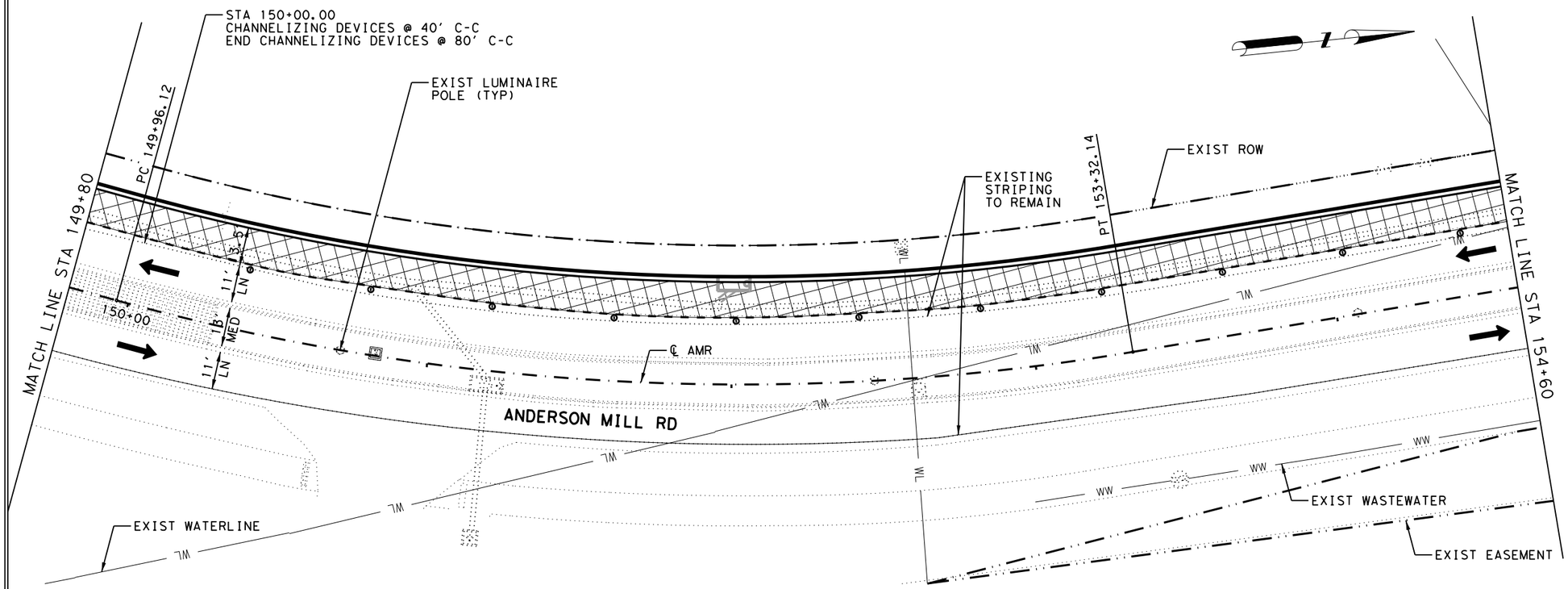


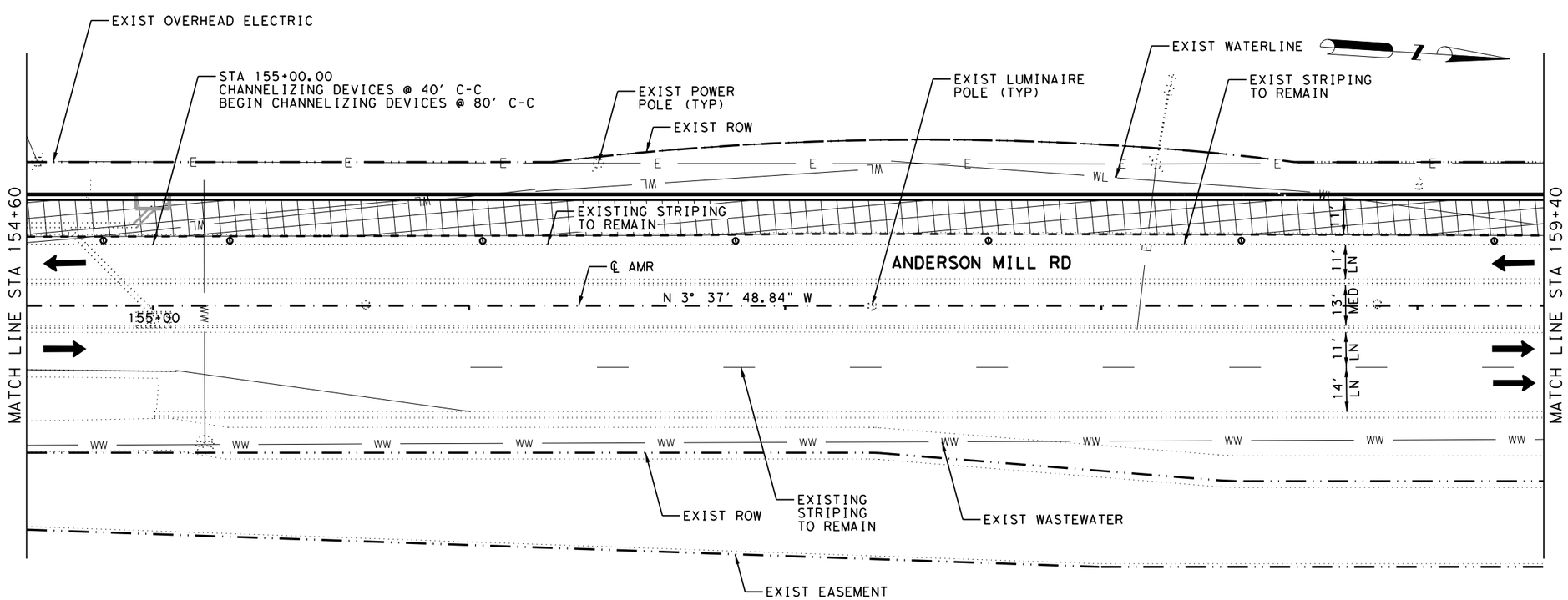


## LEGEND

- EXIST ROW
- EXIST EASEMENT
- PROP SAWCUT
- CONSTRUCTION PREVIOUS PHASE
- CONSTRUCTION THIS PHASE
- TYPE III BARRICADE
- CHANNELIZING DEVICES
- TRAFFIC MOVEMENT

0 20 40

NOTES:

1. DIMENSIONS, STATIONS AND OFFSETS GIVEN AT BACK OF CURB UNLESS OTHERWISE NOTED.
2. WHERE BUFFER BETWEEN LANE LINE AND WORK ZONES IS LESS THREE (3) FEET VERTICAL PANELS MAY BE USED AS CHANNELIZING DEVICES.
3. LOCATION OF EXISTING UTILITES SHOWN ARE APPROXIMATE. CONTRACTOR TO CONFIRM IN THE FIELD PRIOR TO CONSTRUCTION.
4. REFER TO ROADWAY PLAN AND PROFILE SHEETS FOR MORE INFORMATION.

| NO | DATE | ISSUES AND REVISIONS |
|---|---|---|

STATE OF TEXAS
AUSTIN S. HELTON
124922
LICENSED
PROFESSIONAL ENGINEER
8/5/2022

Kimley»Horn F-928
10814 JOLLYVILLE ROAD
BLDG. 4, STE 300
AUSTIN, TX 78759
PHONE: 512-418-1771

# TRAFFIC CONTROL PLAN PHASE 1

SHEET 4 OF 6

ANDERSON MILL ROAD PHASE 2

CEDAR PARK



FILENAME: AMR*TCP*PH1*04.dgn
PLOTTED: 8/5/2022 31:22:05 PM

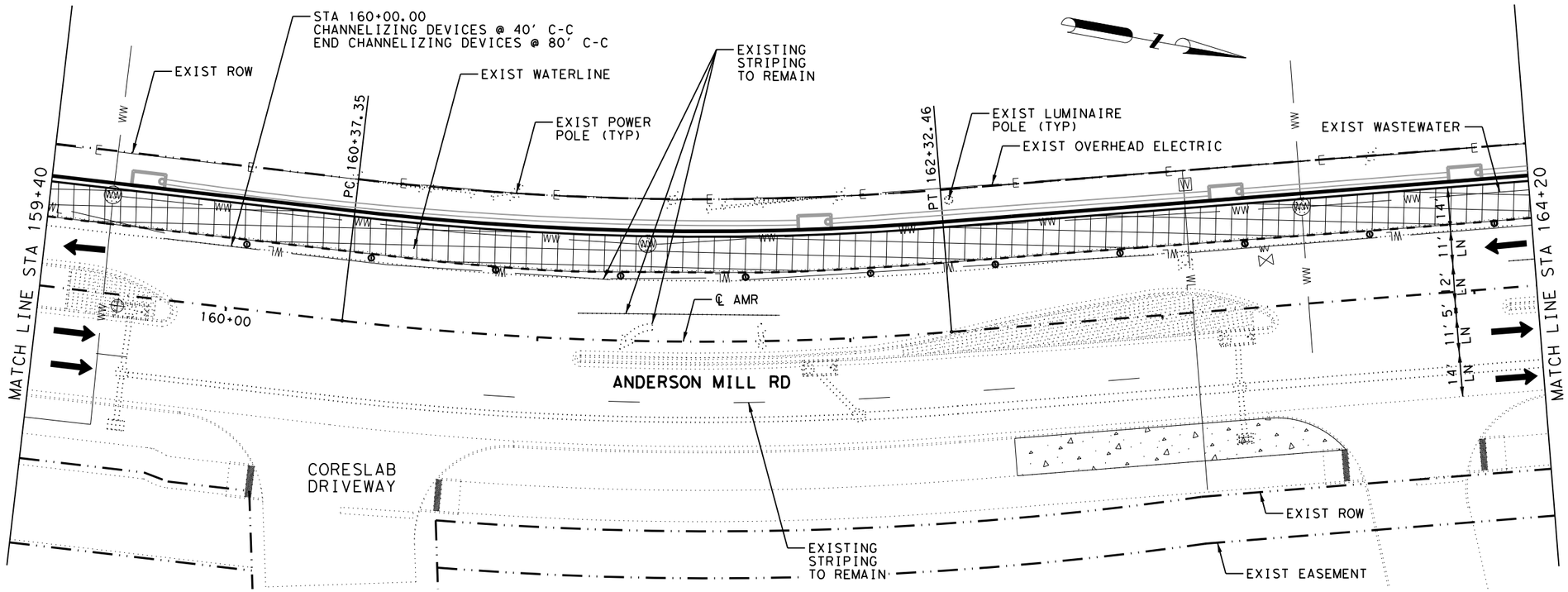


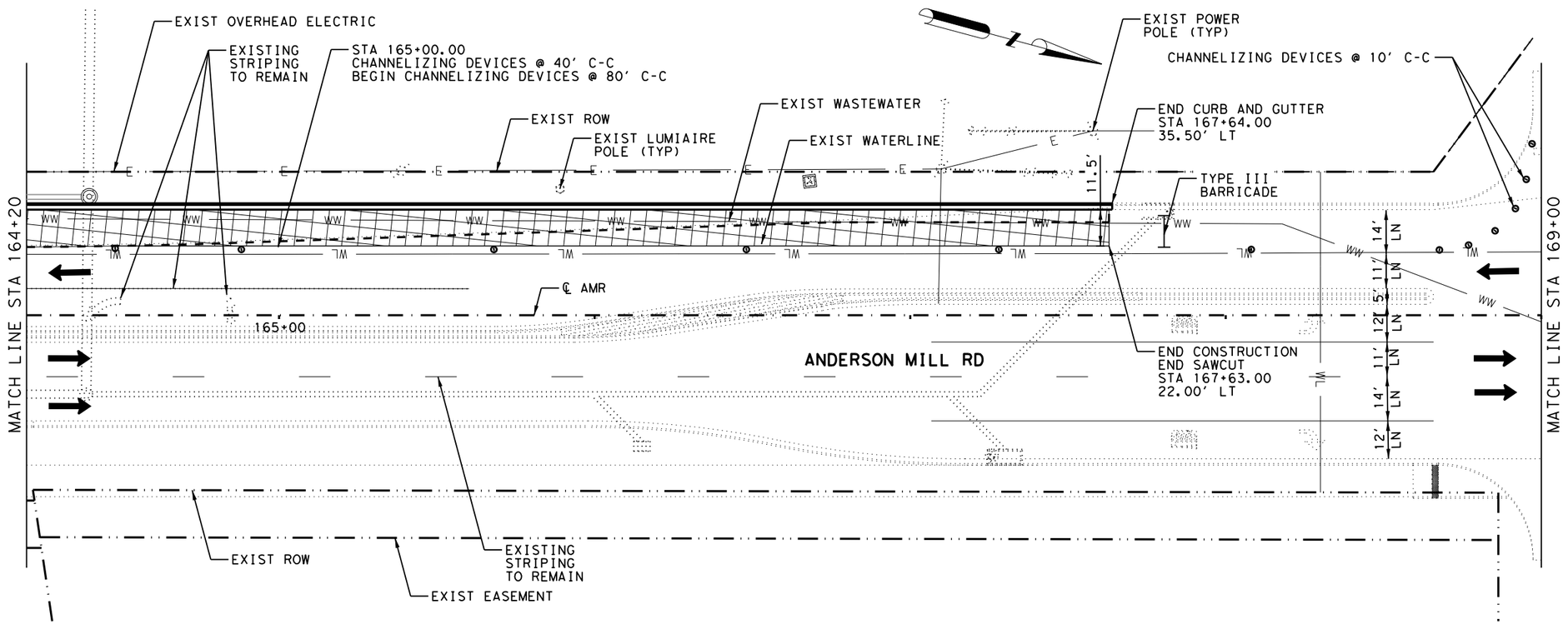


## LEGEND

- EXIST ROW
- EXIST EASEMENT
- PROP SAWCUT
- CONSTRUCTION PREVIOUS PHASE
- CONSTRUCTION THIS PHASE
- TYPE III BARRICADE
- CHANNELIZING DEVICES
- TRAFFIC MOVEMENT

0 20 40

NOTES:

1. DIMENSIONS, STATIONS AND OFFSETS GIVEN AT BACK OF CURB UNLESS OTHERWISE NOTED.
2. WHERE BUFFER BETWEEN LANE LINE AND WORK ZONES IS LESS THREE (3) FEET VERTICAL PANELS MAY BE USED AS CHANNELIZING DEVICES.
3. LOCATION OF EXISTING UTILITES SHOWN ARE APPROXIMATE. CONTRACTOR TO CONFIRM IN THE FIELD PRIOR TO CONSTRUCTION.
4. REFER TO ROADWAY PLAN AND PROFILE SHEETS FOR MORE INFORMATION.

| NO | DATE | ISSUES AND REVISIONS |
|---|---|---|

STATE OF TEXAS
AUSTIN S. HELTON
124922
LICENSED
PROFESSIONAL ENGINEER
8/5/2022

Kimley»Horn F-928
10814 JOLLYVILLE ROAD
BLDG. 4, STE 300
AUSTIN, TX 78759
PHONE: 512-418-1771

# TRAFFIC CONTROL PLAN PHASE 1

SHEET 5 OF 6

ANDERSON MILL ROAD PHASE 2

CEDAR PARK



FILENAME: AMR*TCP*PH1*05.dgn
PLOTTED: 8/5/2022 3:22:15 PM

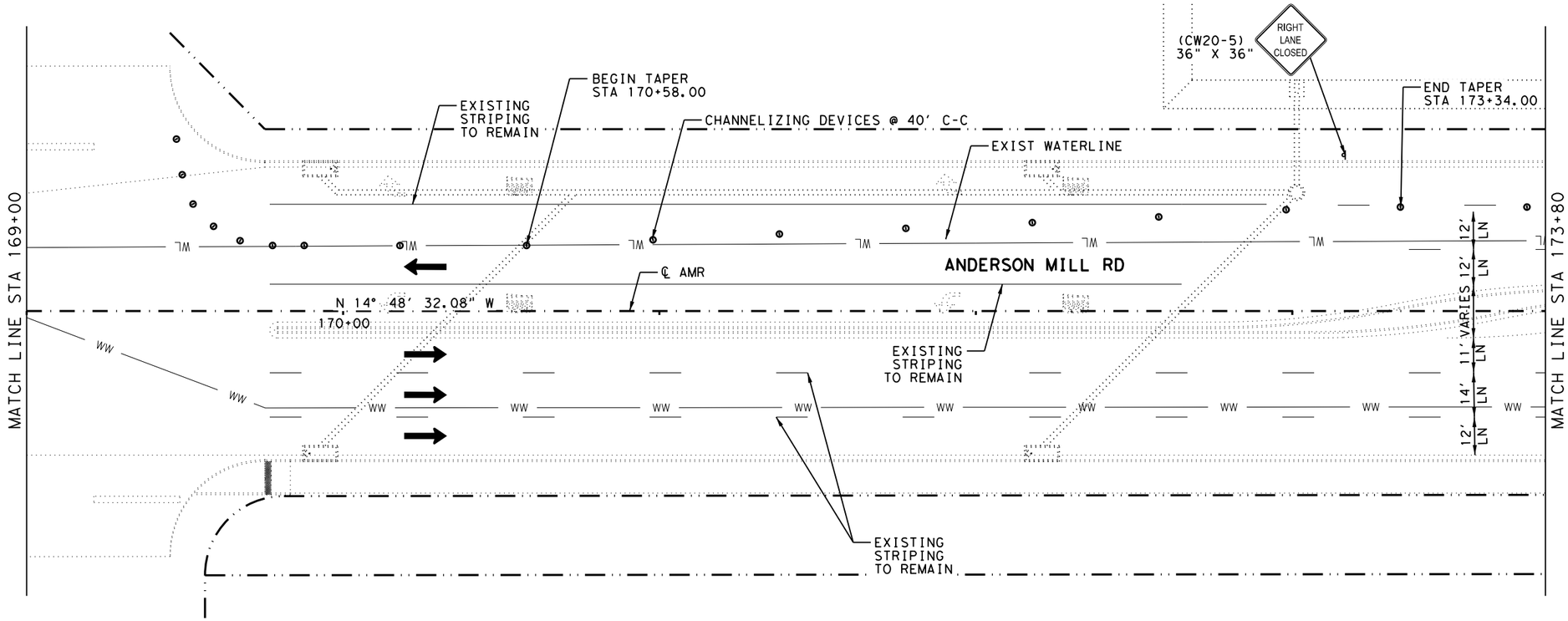


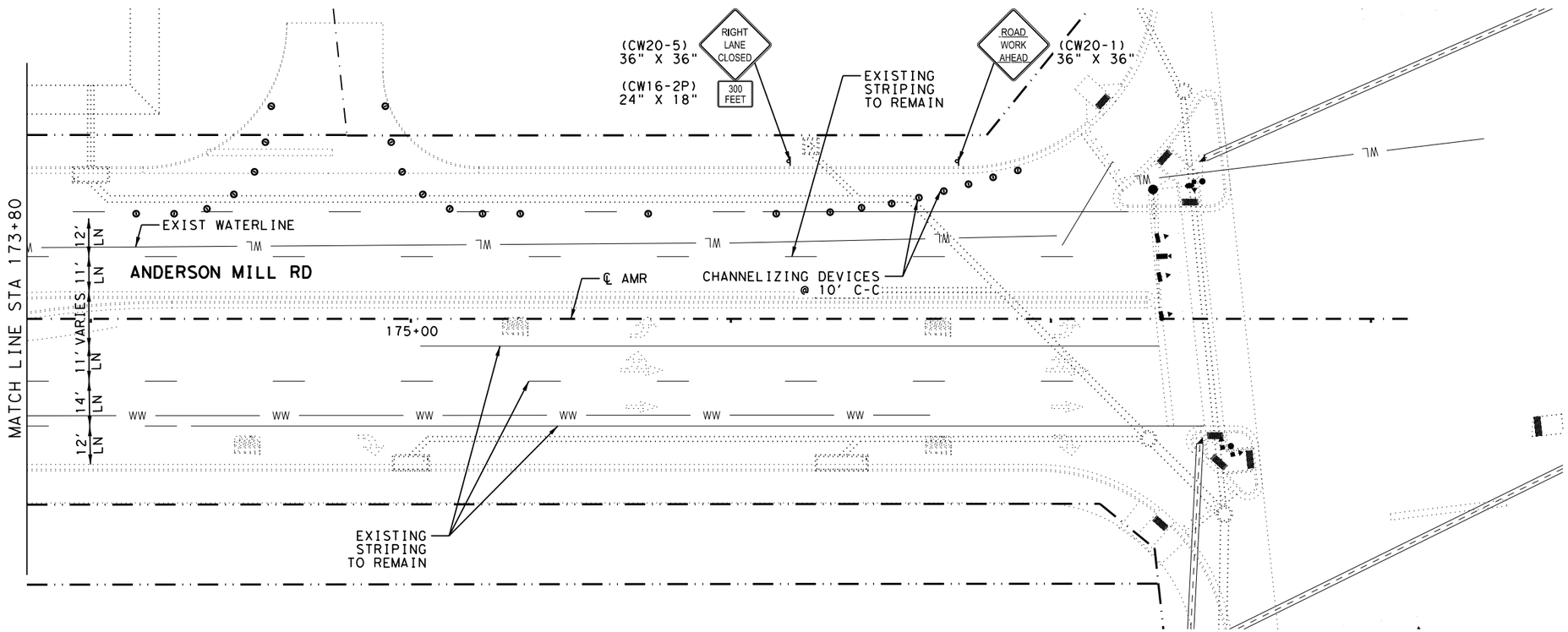

## LEGEND

- EXIST ROW
- EXIST EASEMENT
- PROP SAWCUT
- CONSTRUCTION PREVIOUS PHASE
- CONSTRUCTION THIS PHASE
- TYPE III BARRICADE
- CHANNELIZING DEVICES
- TRAFFIC MOVEMENT

0 20 40

NOTES:

1. DIMENSIONS, STATIONS AND OFFSETS GIVEN AT BACK OF CURB UNLESS OTHERWISE NOTED.
2. WHERE BUFFER BETWEEN LANE LINE AND WORK ZONES IS LESS THREE (3) FEET VERTICAL PANELS MAY BE USED AS CHANNELIZING DEVICES.
3. LOCATION OF EXISTING UTILITES SHOWN ARE APPROXIMATE. CONTRACTOR TO CONFIRM IN THE FIELD PRIOR TO CONSTRUCTION.
4. REFER TO ROADWAY PLAN AND PROFILE SHEETS FOR MORE INFORMATION.

| NO | DATE | ISSUES AND REVISIONS |
|---|---|---|

STATE OF TEXAS
AUSTIN S. HELTON
124922
LICENSED
PROFESSIONAL ENGINEER
8/5/2022

Kimley»Horn F-928
10814 JOLLYVILLE ROAD
BLDG. 4, STE 300
AUSTIN, TX 78759
PHONE: 512-418-1771

# TRAFFIC CONTROL PLAN PHASE 1

SHEET 6 OF 6

ANDERSON MILL ROAD PHASE 2

CEDAR PARK



FILENAME: AMR*TCP*PH1*06.dgn
PLOTTED: 8/5/2022 3:22:23 PM

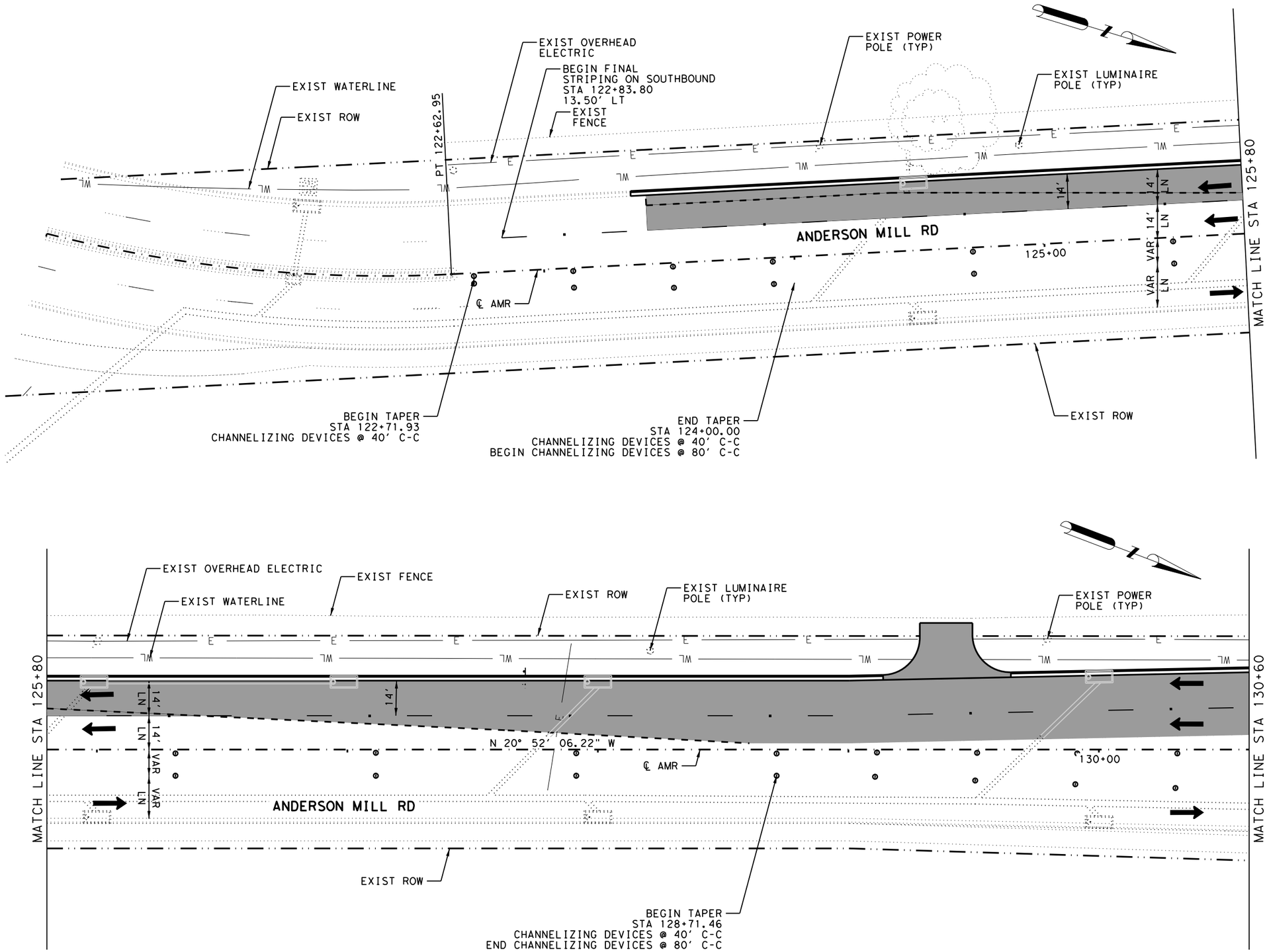


## LEGEND

- EXIST ROW
- EXIST EASEMENT
- PROP SAWCUT
- CONSTRUCTION PREVIOUS PHASE
- CONSTRUCTION THIS PHASE
- TYPE III BARRICADE
- CHANNELIZING DEVICES
- TRAFFIC MOVEMENT

0 20 40

NOTES:

1. DIMENSIONS, STATIONS AND OFFSETS GIVEN AT BACK OF CURB UNLESS OTHERWISE NOTED.
2. WHERE BUFFER BETWEEN LANE LINE AND WORK ZONES IS LESS THREE (3) FEET VERTICAL PANELS MAY BE USED AS CHANNELIZING DEVICES.
3. LOCATION OF EXISTING UTILITES SHOWN ARE APPROXIMATE. CONTRACTOR TO CONFIRM IN THE FIELD PRIOR TO CONSTRUCTION.
4. REFER TO ROADWAY PLAN AND PROFILE SHEETS FOR MORE INFORMATION.

| NO | DATE | ISSUES AND REVISIONS |
|---|---|---|

STATE OF TEXAS
AUSTIN S. HELTON
124922
LICENSED
PROFESSIONAL ENGINEER
8/5/2022

Kimley»Horn F-928
10814 JOLLYVILLE ROAD
BLDG. 4, STE 300
AUSTIN, TX 78759
PHONE: 512-418-1771

# TRAFFIC CONTROL PLAN PHASE 2

SHEET 1 OF 6

ANDERSON MILL ROAD PHASE 2

CEDAR PARK



FILENAME: AMR*TCP*PH2*01.dgn
PLOTTED: 8/5/2022 3:22:42 PM

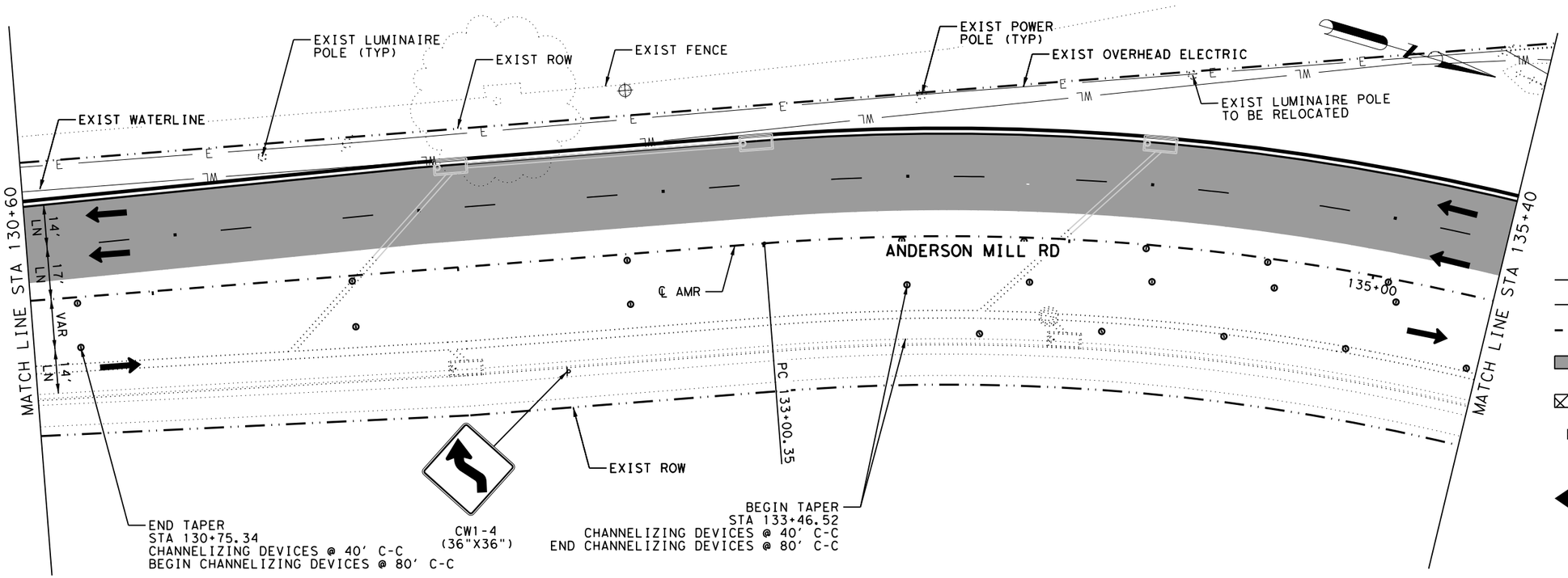


## LEGEND

- EXIST ROW
- EXIST EASEMENT
- PROP SAWCUT
- CONSTRUCTION PREVIOUS PHASE
- CONSTRUCTION THIS PHASE
- TYPE III BARRICADE
- CHANNELIZING DEVICES
- TRAFFIC MOVEMENT

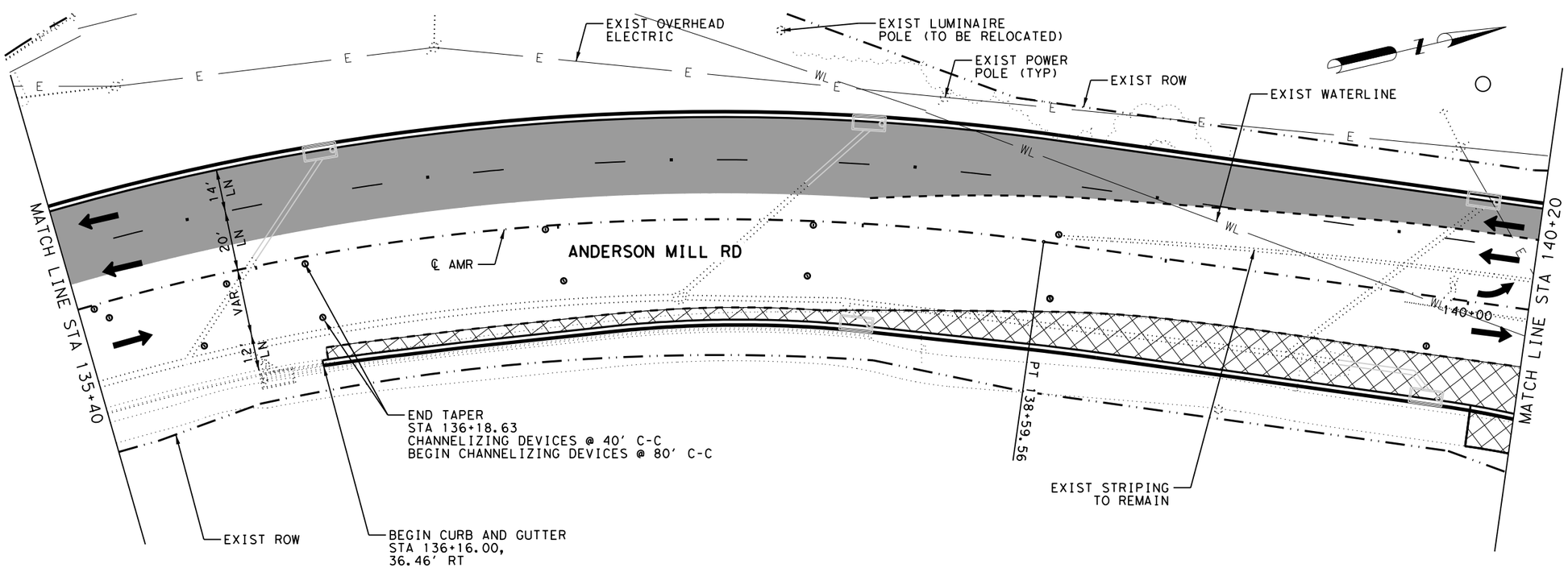


0 20 40

NOTES:

1. DIMENSIONS, STATIONS AND OFFSETS GIVEN AT BACK OF CURB UNLESS OTHERWISE NOTED.
2. WHERE BUFFER BETWEEN LANE LINE AND WORK ZONES IS LESS THREE (3) FEET VERTICAL PANELS MAY BE USED AS CHANNELIZING DEVICES.
3. LOCATION OF EXISTING UTILITES SHOWN ARE APPROXIMATE. CONTRACTOR TO CONFIRM IN THE FIELD PRIOR TO CONSTRUCTION.
4. REFER TO ROADWAY PLAN AND PROFILE SHEETS FOR MORE INFORMATION.

| NO | DATE | ISSUES AND REVISIONS |
|---|---|---|

STATE OF TEXAS
AUSTIN S. HELTON
124922
LICENSED
PROFESSIONAL ENGINEER
8/5/2022

Kimley»Horn F-928
10814 JOLLYVILLE ROAD
BLDG. 4, STE 300
AUSTIN, TX 78759
PHONE: 512-418-1771

# TRAFFIC CONTROL PLAN PHASE 2

SHEET 2 OF 6

ANDERSON MILL ROAD PHASE 2

CEDAR PARK



FILENAME: AMR*TCP*PH2*02.dgn
PLOTTED: 8/5/2022 3:22:57 PM

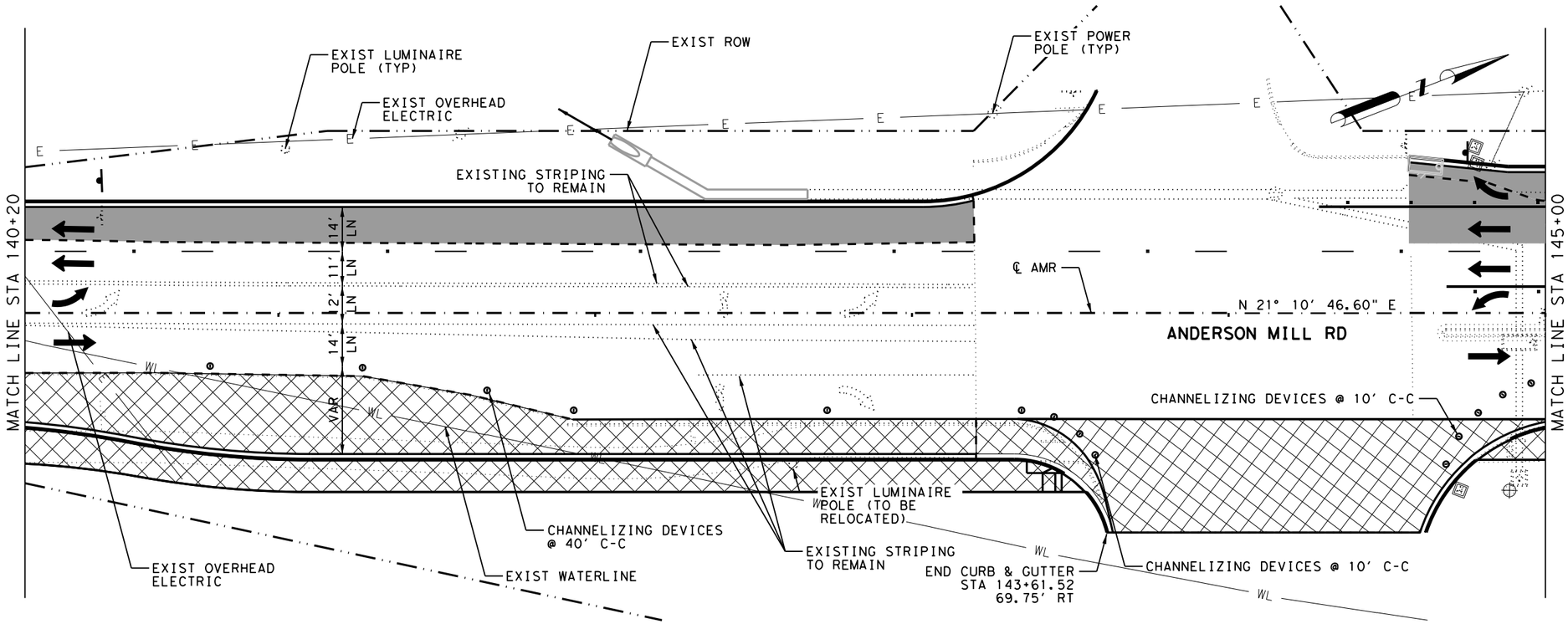


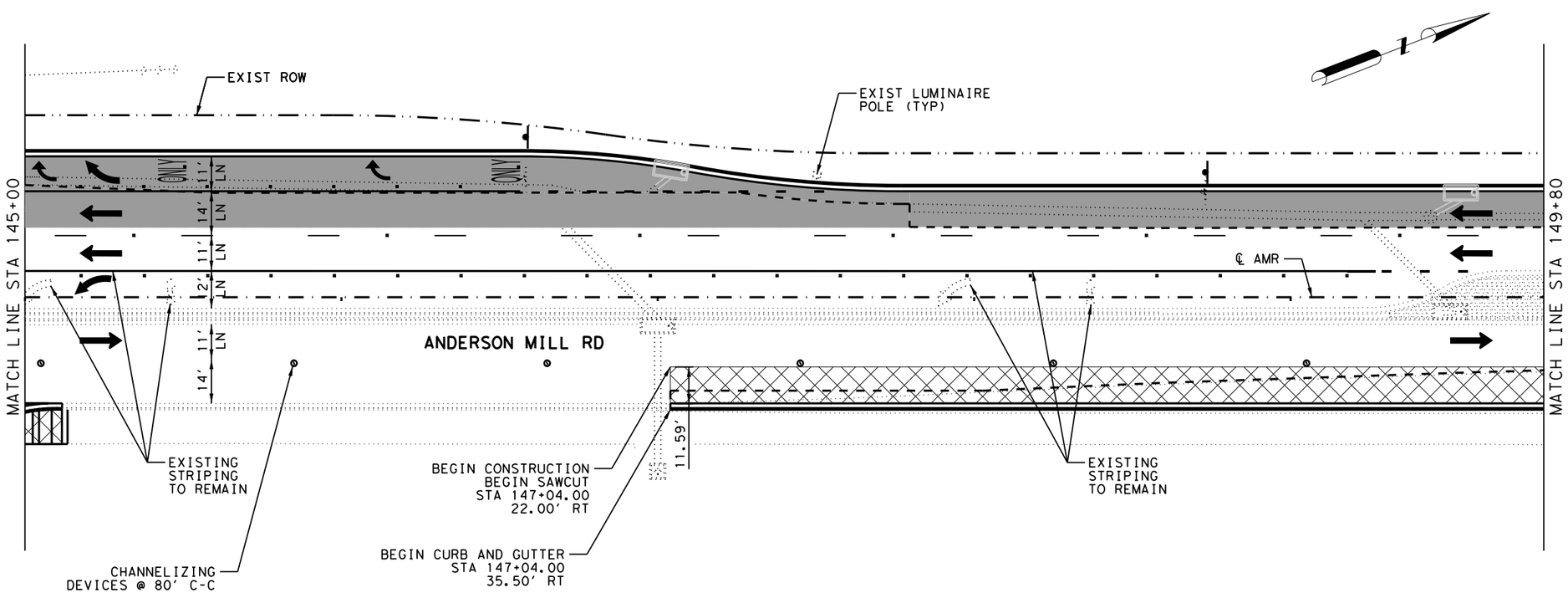


## LEGEND

- EXIST ROW
- EXIST EASEMENT
- PROP SAWCUT
- CONSTRUCTION PREVIOUS PHASE
- CONSTRUCTION THIS PHASE
- TYPE III BARRICADE
- CHANNELIZING DEVICES
- TRAFFIC MOVEMENT

0 20 40

NOTES:

1. DIMENSIONS, STATIONS AND OFFSETS GIVEN AT BACK OF CURB UNLESS OTHERWISE NOTED.
2. WHERE BUFFER BETWEEN LANE LINE AND WORK ZONES IS LESS THREE (3) FEET VERTICAL PANELS MAY BE USED AS CHANNELIZING DEVICES.
3. LOCATION OF EXISTING UTILITES SHOWN ARE APPROXIMATE. CONTRACTOR TO CONFIRM IN THE FIELD PRIOR TO CONSTRUCTION.
4. REFER TO ROADWAY PLAN AND PROFILE SHEETS FOR MORE INFORMATION.

| NO | DATE | ISSUES AND REVISIONS |
|---|---|---|

STATE OF TEXAS
AUSTIN S. HELTON
124922
LICENSED
PROFESSIONAL ENGINEER
8/5/2022

Kimley»Horn F-928
10814 JOLLYVILLE ROAD
BLDG. 4, STE 300
AUSTIN, TX 78759
PHONE: 512-418-1771

# TRAFFIC CONTROL PLAN PHASE 2

SHEET 3 OF 6

ANDERSON MILL ROAD PHASE 2

CEDAR PARK



FILENAME: AMR-TCP-PH2-03.dgn
PLOTTED: 8/5/2022 3:23:12 PM

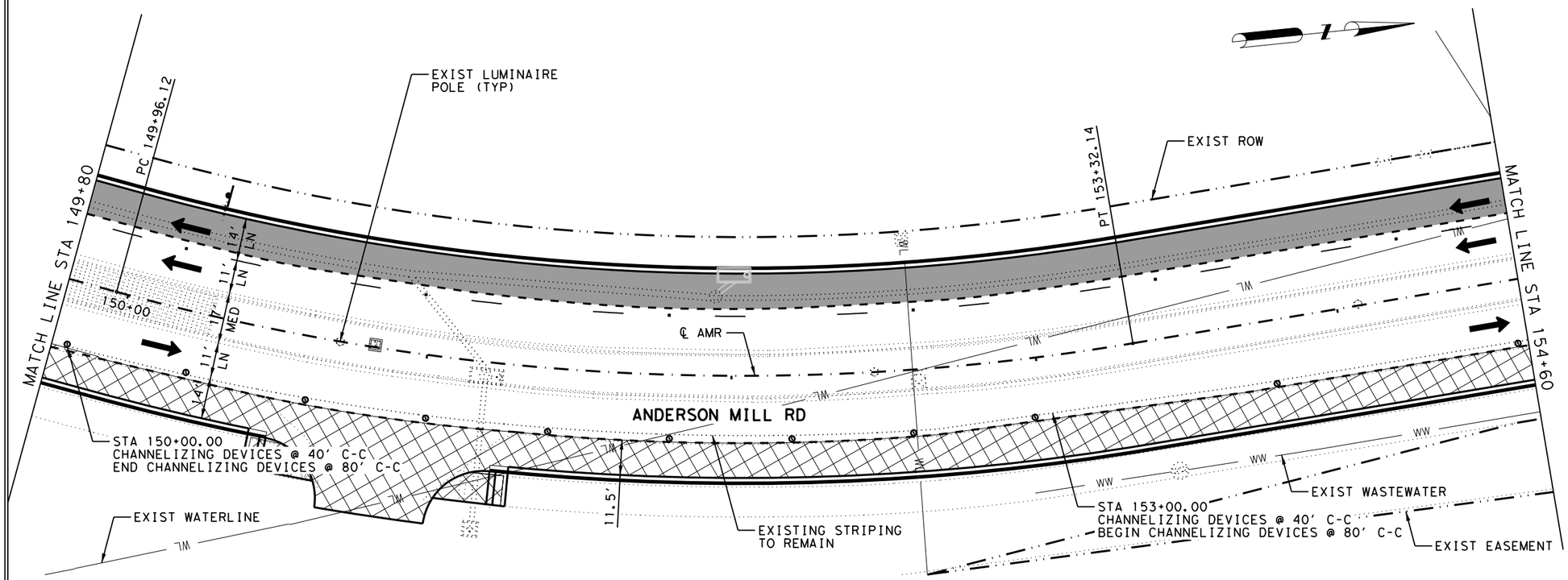


## LEGEND

- EXIST ROW
- EXIST EASEMENT
- PROP SAWCUT
- CONSTRUCTION PREVIOUS PHASE
- CONSTRUCTION THIS PHASE
- TYPE III BARRICADE
- CHANNELIZING DEVICES
- TRAFFIC MOVEMENT

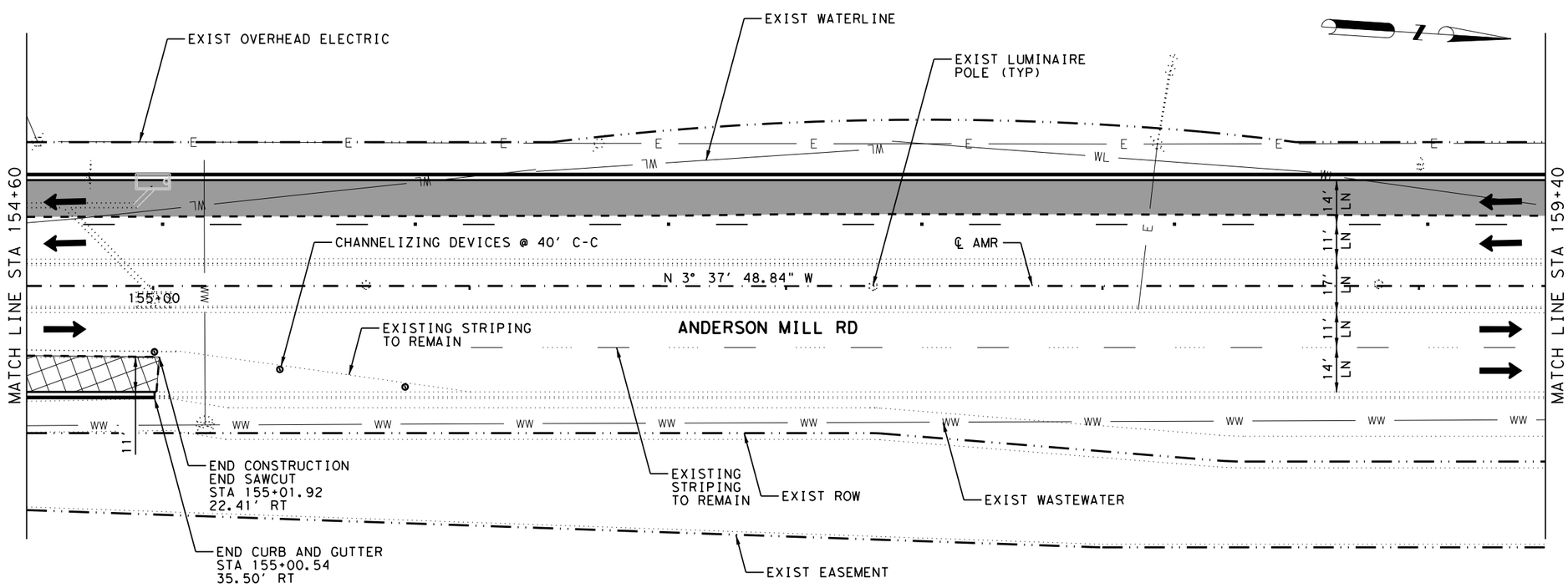


0 20 40

NOTES:

1. DIMENSIONS, STATIONS AND OFFSETS GIVEN AT BACK OF CURB UNLESS OTHERWISE NOTED.
2. WHERE BUFFER BETWEEN LANE LINE AND WORK ZONES IS LESS THREE (3) FEET VERTICAL PANELS MAY BE USED AS CHANNELIZING DEVICES.
3. LOCATION OF EXISTING UTILITES SHOWN ARE APPROXIMATE. CONTRACTOR TO CONFIRM IN THE FIELD PRIOR TO CONSTRUCTION.
4. REFER TO ROADWAY PLAN AND PROFILE SHEETS FOR MORE INFORMATION.

| NO | DATE | ISSUES AND REVISIONS |
|---|---|---|

STATE OF TEXAS
AUSTIN S. HELTON
124922
LICENSED
PROFESSIONAL ENGINEER
8/5/2022

Kimley»Horn F-928
10814 JOLLYVILLE ROAD
BLDG. 4, STE 300
AUSTIN, TX 78759
PHONE: 512-418-1771

# TRAFFIC CONTROL PLAN PHASE 2

SHEET 4 OF 6

ANDERSON MILL ROAD PHASE 2

CEDAR PARK



FILENAME: AMR*TCP*PH2*04.dgn
PLOTTED: 8/5/2022 3:23:27 PM

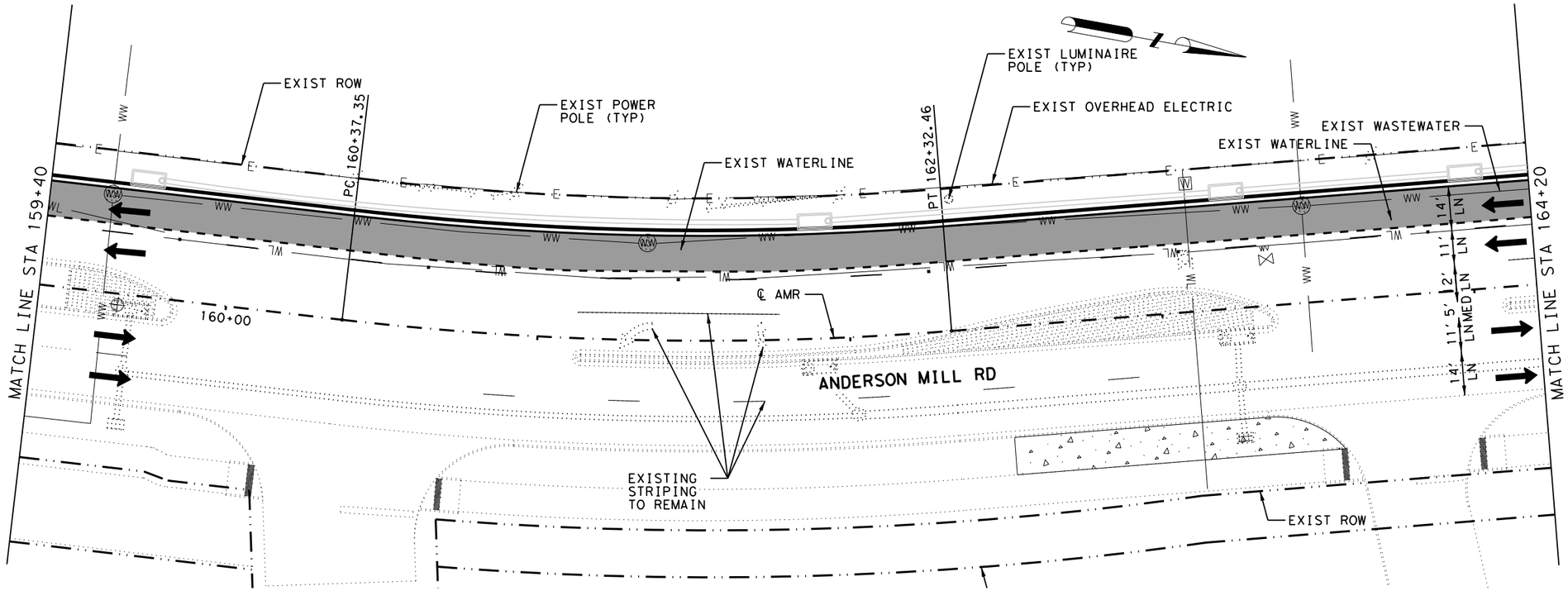


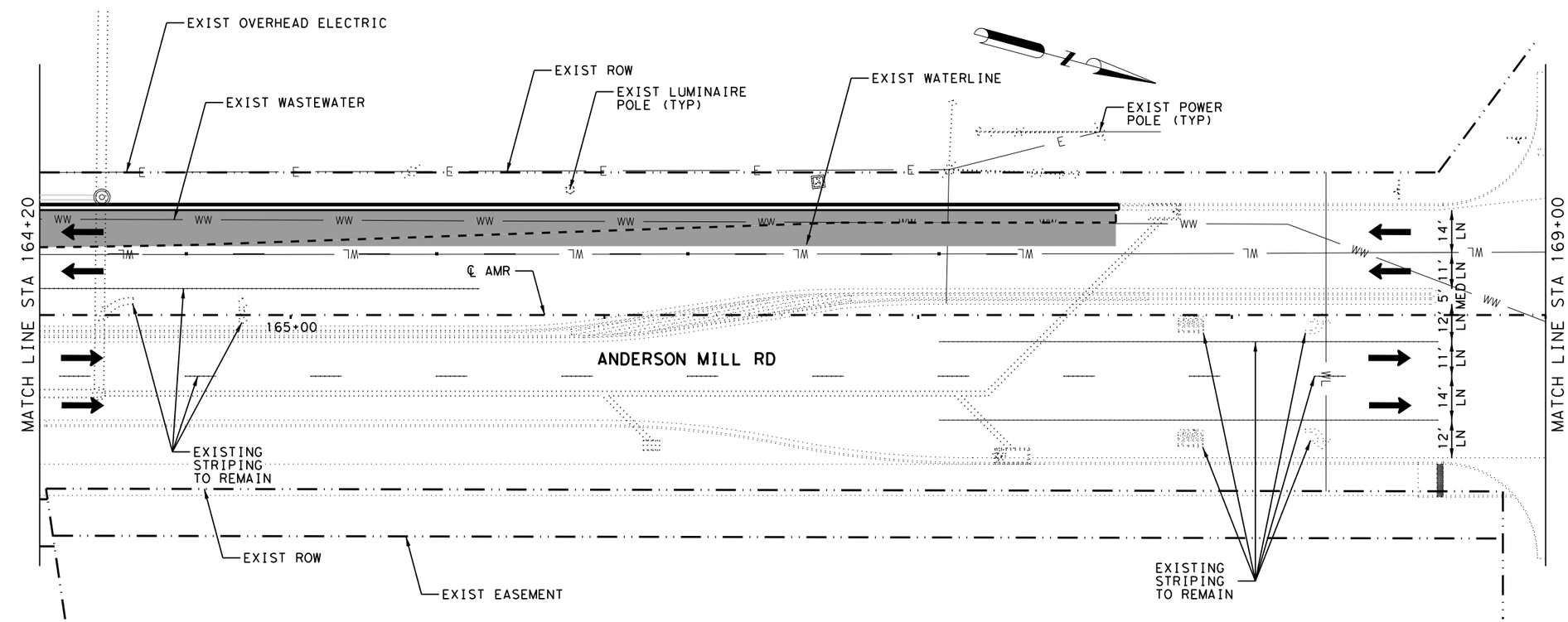


## LEGEND

- EXIST ROW
- EXIST EASEMENT
- PROP SAWCUT
- CONSTRUCTION PREVIOUS PHASE
- CONSTRUCTION THIS PHASE
- TYPE III BARRICADE
- CHANNELIZING DEVICES
- TRAFFIC MOVEMENT

0 20 40

NOTES:

1. DIMENSIONS, STATIONS AND OFFSETS GIVEN AT BACK OF CURB UNLESS OTHERWISE NOTED.
2. WHERE BUFFER BETWEEN LANE LINE AND WORK ZONES IS LESS THREE (3) FEET VERTICAL PANELS MAY BE USED AS CHANNELIZING DEVICES.
3. LOCATION OF EXISTING UTILITES SHOWN ARE APPROXIMATE. CONTRACTOR TO CONFIRM IN THE FIELD PRIOR TO CONSTRUCTION.
4. REFER TO ROADWAY PLAN AND PROFILE SHEETS FOR MORE INFORMATION.

| NO | DATE | ISSUES AND REVISIONS |
|---|---|---|

STATE OF TEXAS
AUSTIN S. HELTON
124922
LICENSED
PROFESSIONAL ENGINEER
8/5/2022

Kimley»Horn F-928
10814 JOLLYVILLE ROAD
BLDG. 4, STE 300
AUSTIN, TX 78759
PHONE: 512-418-1771

# TRAFFIC CONTROL PLAN PHASE 2

SHEET 5 OF 6

ANDERSON MILL ROAD PHASE 2

CEDAR PARK



FILENAME: AMR*TCP*PH2*05.dgn
PLOTTED: 8/5/2022 3:23:37 PM

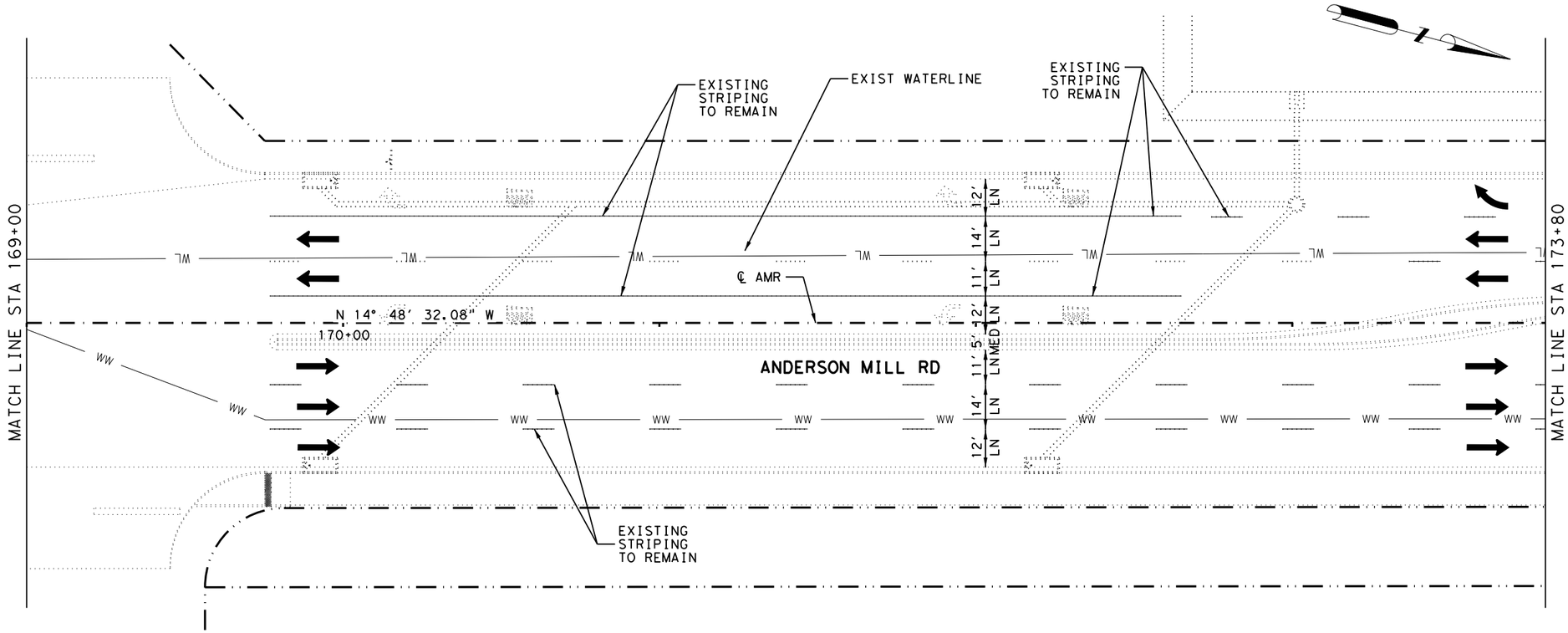


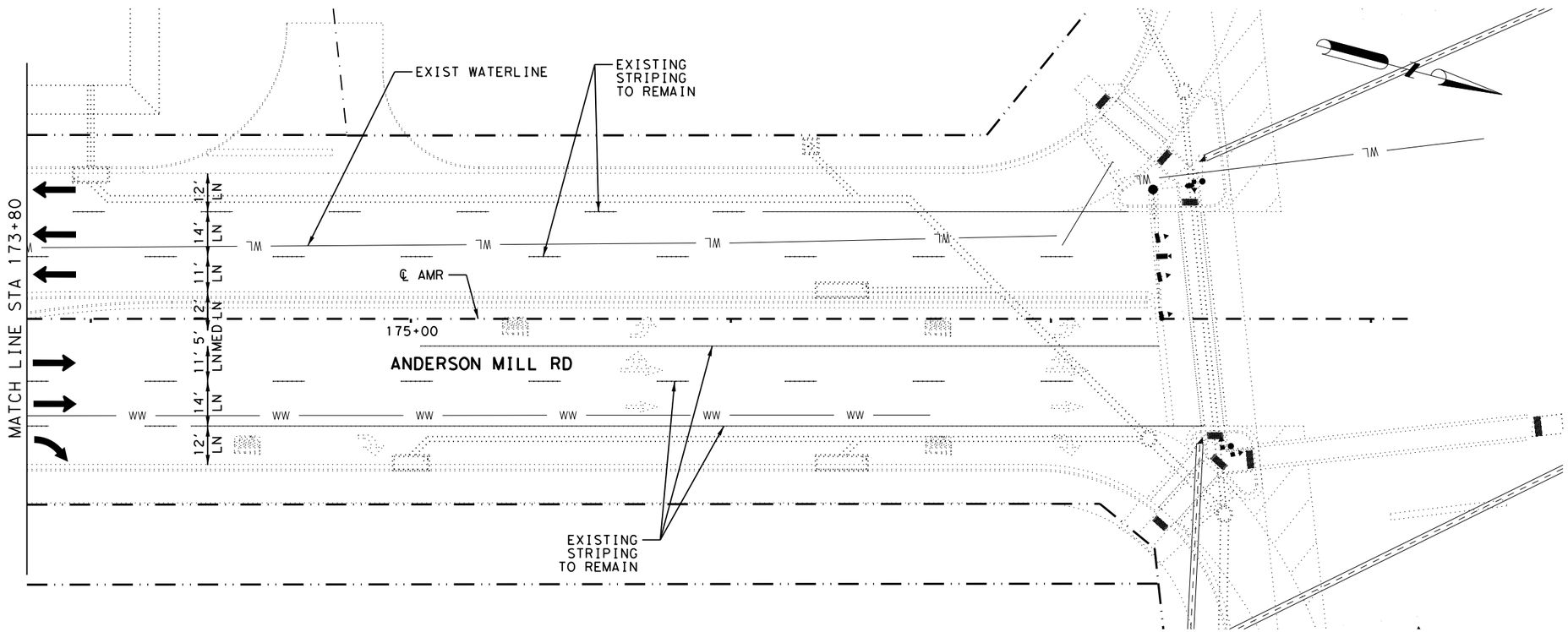


## LEGEND

- EXIST ROW
- EXIST EASEMENT
- PROP SAWCUT
- CONSTRUCTION PREVIOUS PHASE
- CONSTRUCTION THIS PHASE
- TYPE III BARRICADE
- CHANNELIZING DEVICES
- TRAFFIC MOVEMENT

0 20 40

NOTES:

1. DIMENSIONS, STATIONS AND OFFSETS GIVEN AT BACK OF CURB UNLESS OTHERWISE NOTED.
2. WHERE BUFFER BETWEEN LANE LINE AND WORK ZONES IS LESS THREE (3) FEET VERTICAL PANELS MAY BE USED AS CHANNELIZING DEVICES.
3. LOCATION OF EXISTING UTILITES SHOWN ARE APPROXIMATE. CONTRACTOR TO CONFIRM IN THE FIELD PRIOR TO CONSTRUCTION.
4. REFER TO ROADWAY PLAN AND PROFILE SHEETS FOR MORE INFORMATION.

| NO | DATE | ISSUES AND REVISIONS |
|---|---|---|

STATE OF TEXAS
AUSTIN S. HELTON
124922
LICENSED
PROFESSIONAL ENGINEER
8/5/2022

Kimley»Horn F-928
10814 JOLLYVILLE ROAD
BLDG. 4, STE 300
AUSTIN, TX 78759
PHONE: 512-418-1771

# TRAFFIC CONTROL PLAN PHASE 2

SHEET 6 OF 6

ANDERSON MILL ROAD PHASE 2

CEDAR PARK



FILENAME: AMR*TCP*PH2*06.dgn
PLOTTED: 8/5/2022 3:23:48 PM

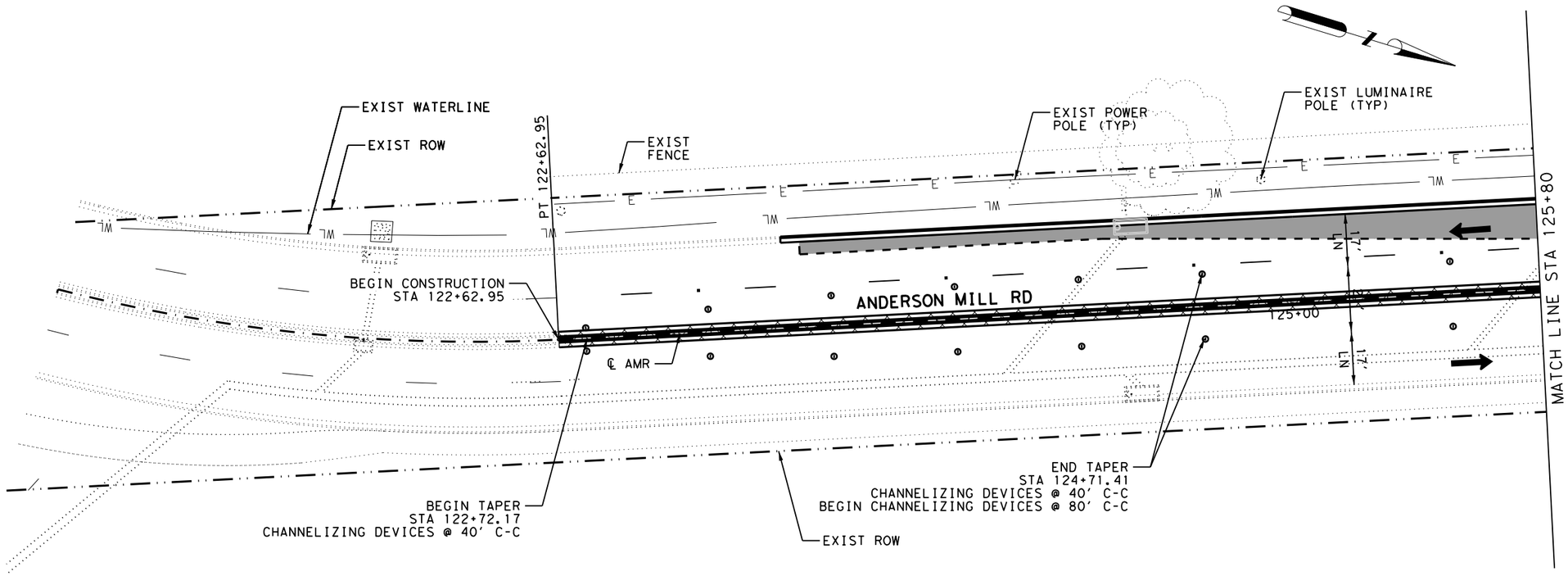


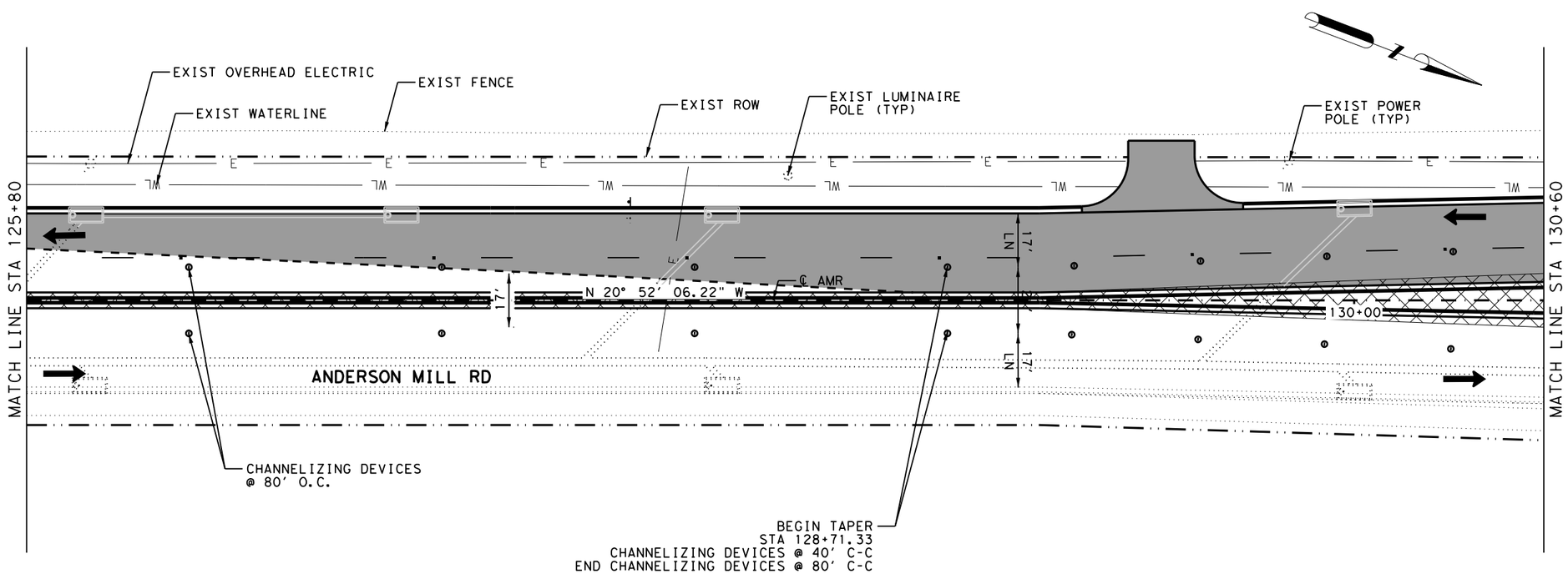


## LEGEND

- EXIST ROW
- EXIST EASEMENT
- PROP SAWCUT
- CONSTRUCTION PREVIOUS PHASE
- CONSTRUCTION THIS PHASE
- TYPE III BARRICADE
- CHANNELIZING DEVICES
- TRAFFIC MOVEMENT

0 20 40

NOTES:

1. DIMENSIONS, STATIONS AND OFFSETS GIVEN AT BACK OF CURB UNLESS OTHERWISE NOTED.
2. WHERE BUFFER BETWEEN LANE LINE AND WORK ZONES IS LESS THREE (3) FEET VERTICAL PANELS MAY BE USED AS CHANNELIZING DEVICES.
3. LOCATION OF EXISTING UTILITES SHOWN ARE APPROXIMATE. CONTRACTOR TO CONFIRM IN THE FIELD PRIOR TO CONSTRUCTION.
4. REFER TO ROADWAY PLAN AND PROFILE SHEETS FOR MORE INFORMATION.

| NO | DATE | ISSUES AND REVISIONS |
|---|---|---|

STATE OF TEXAS
AUSTIN S. HELTON
124922
LICENSED
PROFESSIONAL ENGINEER
8/5/2022

Kimley»Horn F-928
10814 JOLLYVILLE ROAD
BLDG. 4, STE 300
AUSTIN, TX 78759
PHONE: 512-418-1771

# TRAFFIC CONTROL PLAN PHASE 3

SHEET 1 OF 4

ANDERSON MILL ROAD PHASE 2

CEDAR PARK



FILENAME: AMR*TCP*PH3*01.dgn
PLOTTED: 8/5/2022 3:24:04 PM

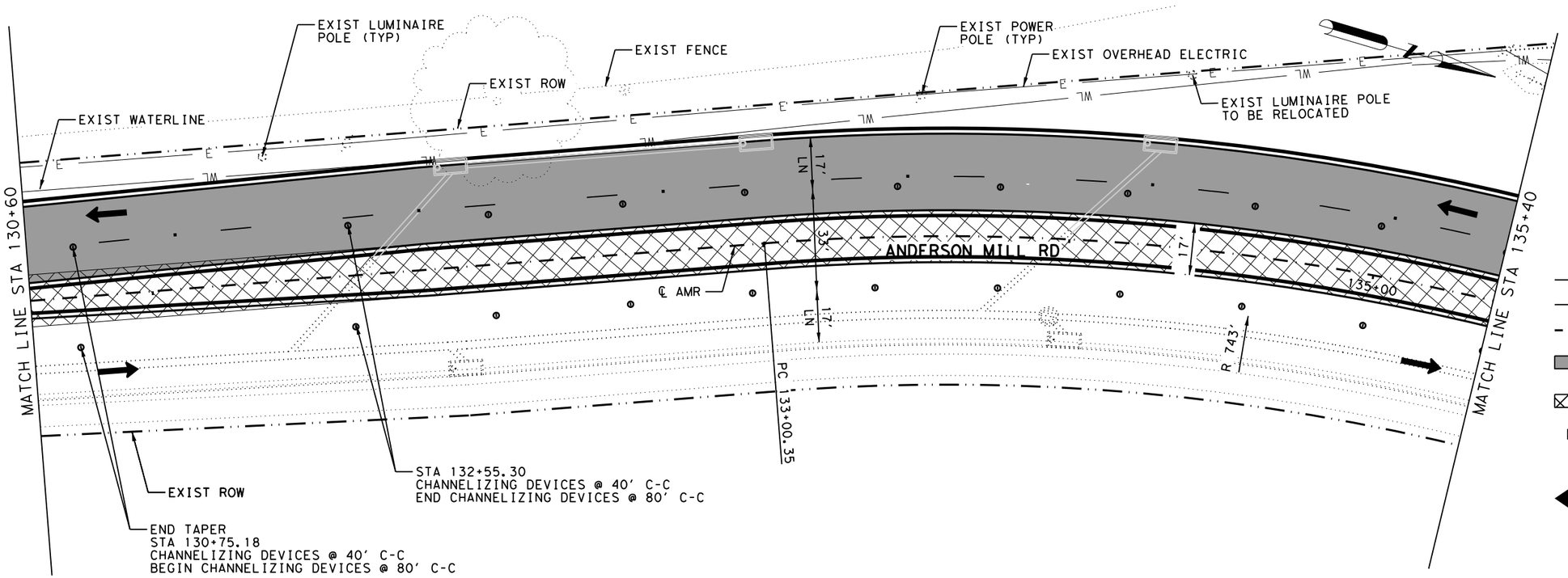


## LEGEND

- EXIST ROW
- EXIST EASEMENT
- PROP SAWCUT
- CONSTRUCTION PREVIOUS PHASE
- CONSTRUCTION THIS PHASE
- TYPE III BARRICADE
- CHANNELIZING DEVICES
- TRAFFIC MOVEMENT

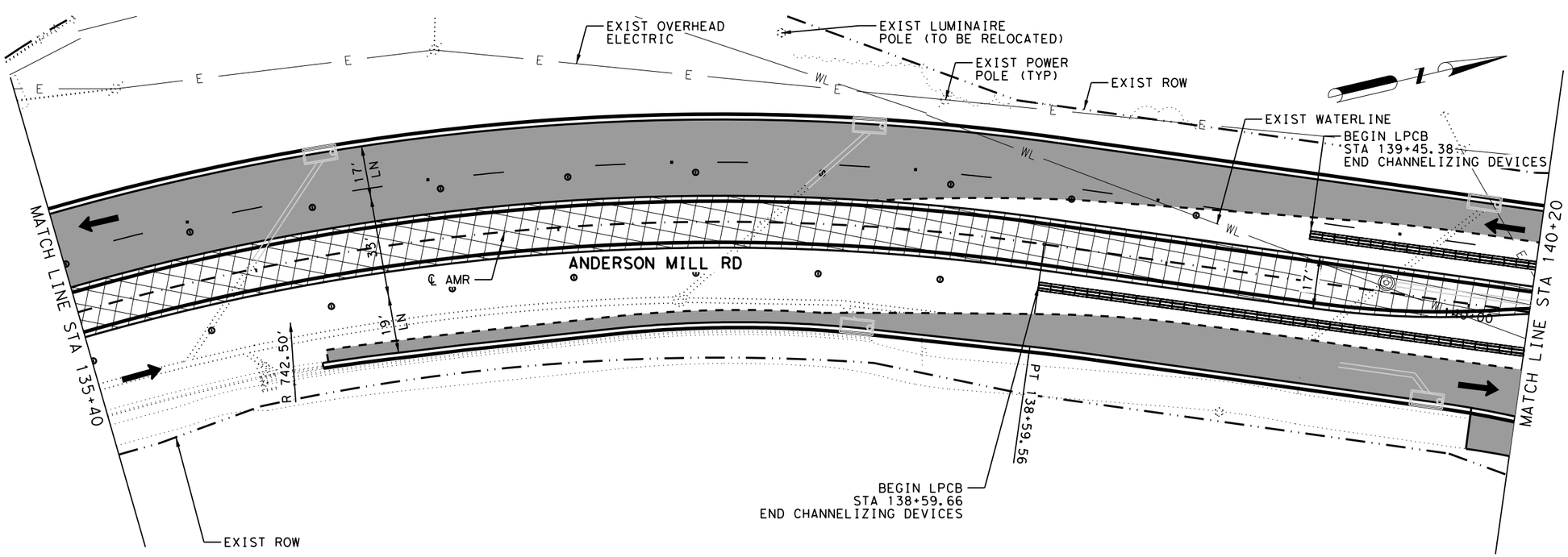


0 20 40

NOTES:

1. DIMENSIONS, STATIONS AND OFFSETS GIVEN AT BACK OF CURB UNLESS OTHERWISE NOTED.
2. WHERE BUFFER BETWEEN LANE LINE AND WORK ZONES IS LESS THREE (3) FEET VERTICAL PANELS MAY BE USED AS CHANNELIZING DEVICES.
3. LOCATION OF EXISTING UTILITES SHOWN ARE APPROXIMATE. CONTRACTOR TO CONFIRM IN THE FIELD PRIOR TO CONSTRUCTION.
4. REFER TO ROADWAY PLAN AND PROFILE SHEETS FOR MORE INFORMATION.

| NO | DATE | ISSUES AND REVISIONS |
|---|---|---|

STATE OF TEXAS
AUSTIN S. HELTON
124922
LICENSED
PROFESSIONAL ENGINEER
8/5/2022

Kimley»Horn F-928
10814 JOLLYVILLE ROAD
BLDG. 4, STE 300
AUSTIN, TX 78759
PHONE: 512-418-1771

# TRAFFIC CONTROL PLAN PHASE 3

SHEET 2 OF 4

ANDERSON MILL ROAD PHASE 2

CEDAR PARK



FILENAME: AMR*TCP*PH3*02.dgn
PLOTTED: 8/5/2022 3:24:22 PM

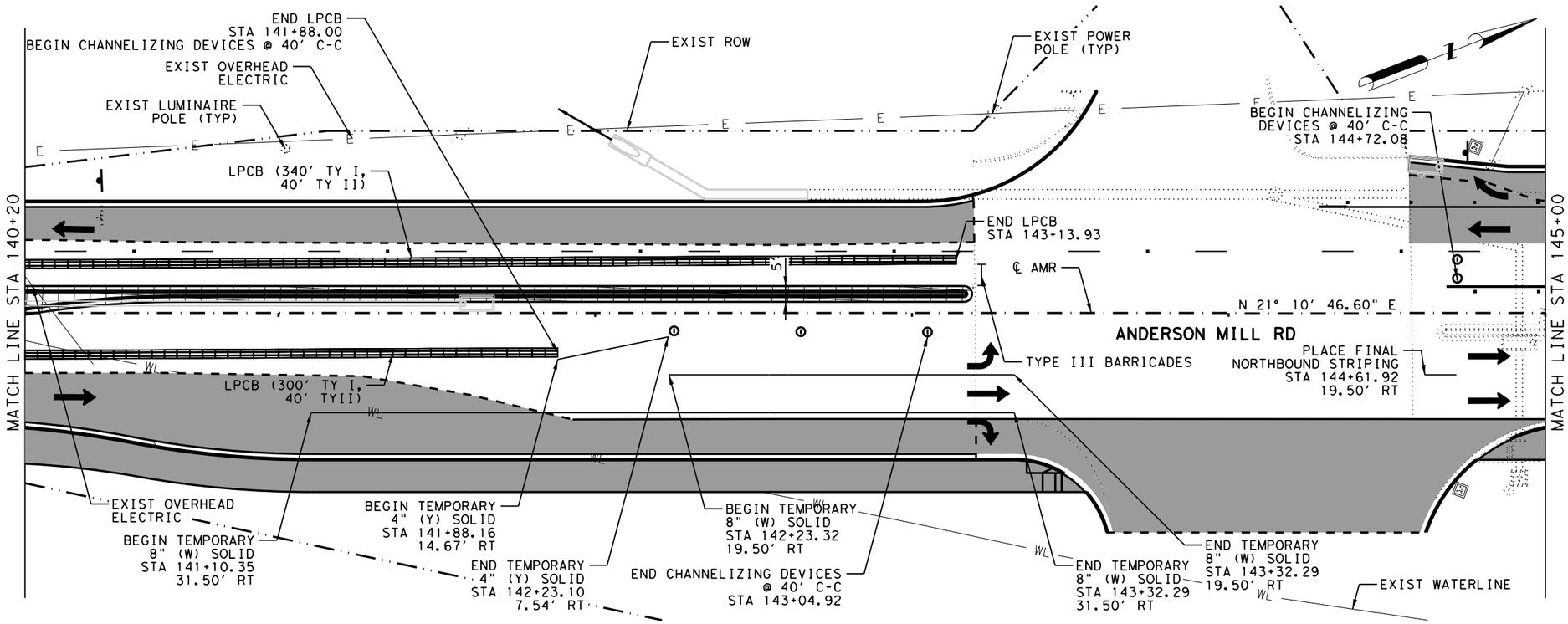


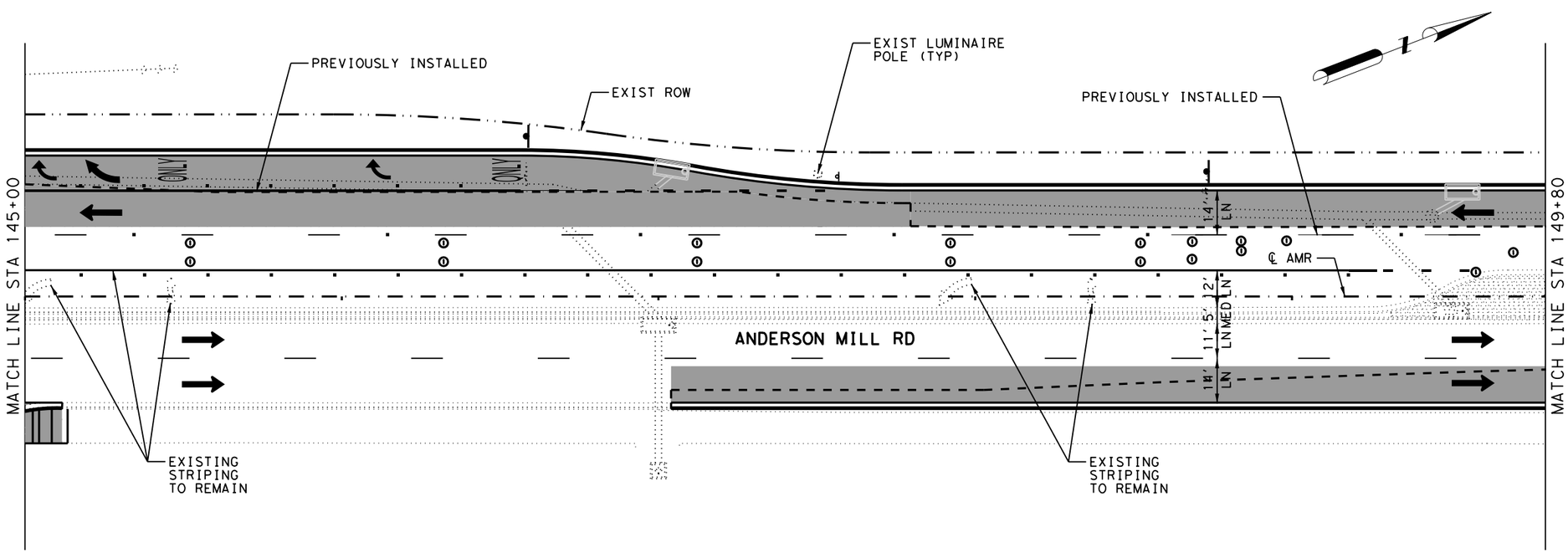


## LEGEND

- EXIST ROW
- EXIST EASEMENT
- PROP SAWCUT
- CONSTRUCTION PREVIOUS PHASE
- CONSTRUCTION THIS PHASE
- TYPE III BARRICADE
- CHANNELIZING DEVICES
- TRAFFIC MOVEMENT

0 20 40

NOTES:

1. DIMENSIONS, STATIONS AND OFFSETS GIVEN AT BACK OF CURB UNLESS OTHERWISE NOTED.
2. WHERE BUFFER BETWEEN LANE LINE AND WORK ZONES IS LESS THREE (3) FEET VERTICAL PANELS MAY BE USED AS CHANNELIZING DEVICES.
3. LOCATION OF EXISTING UTILITES SHOWN ARE APPROXIMATE. CONTRACTOR TO CONFIRM IN THE FIELD PRIOR TO CONSTRUCTION.
4. REFER TO ROADWAY PLAN AND PROFILE SHEETS FOR MORE INFORMATION.

| NO | DATE | ISSUES AND REVISIONS |
|---|---|---|

STATE OF TEXAS
AUSTIN S. HELTON
124922
LICENSED
PROFESSIONAL ENGINEER
8/5/2022

Kimley»Horn F-928
10814 JOLLYVILLE ROAD
BLDG. 4, STE 300
AUSTIN, TX 78759
PHONE: 512-418-1771

# TRAFFIC CONTROL PLAN PHASE 3

SHEET 3 OF 4

ANDERSON MILL ROAD PHASE 2

CEDAR PARK



FILENAME: AMR*TCP*PH3*03.dgn
PLOTTED: 8/5/2022 3:24:37 PM

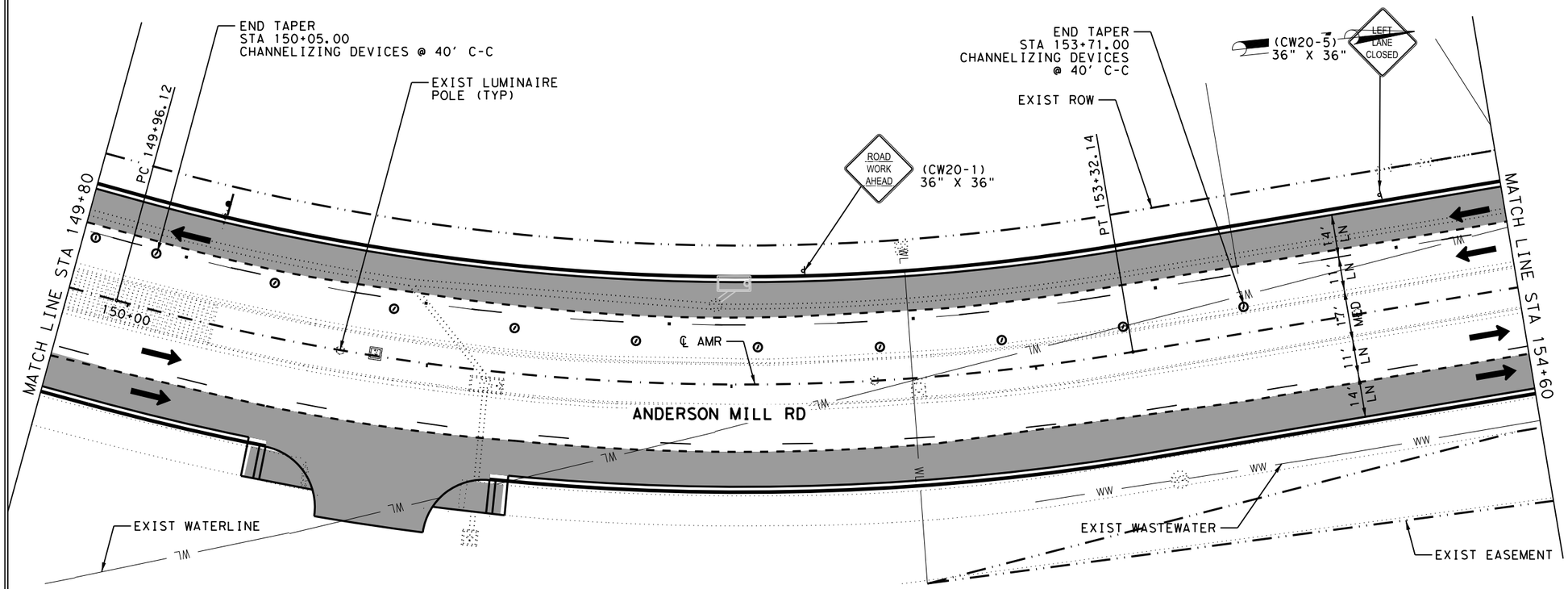


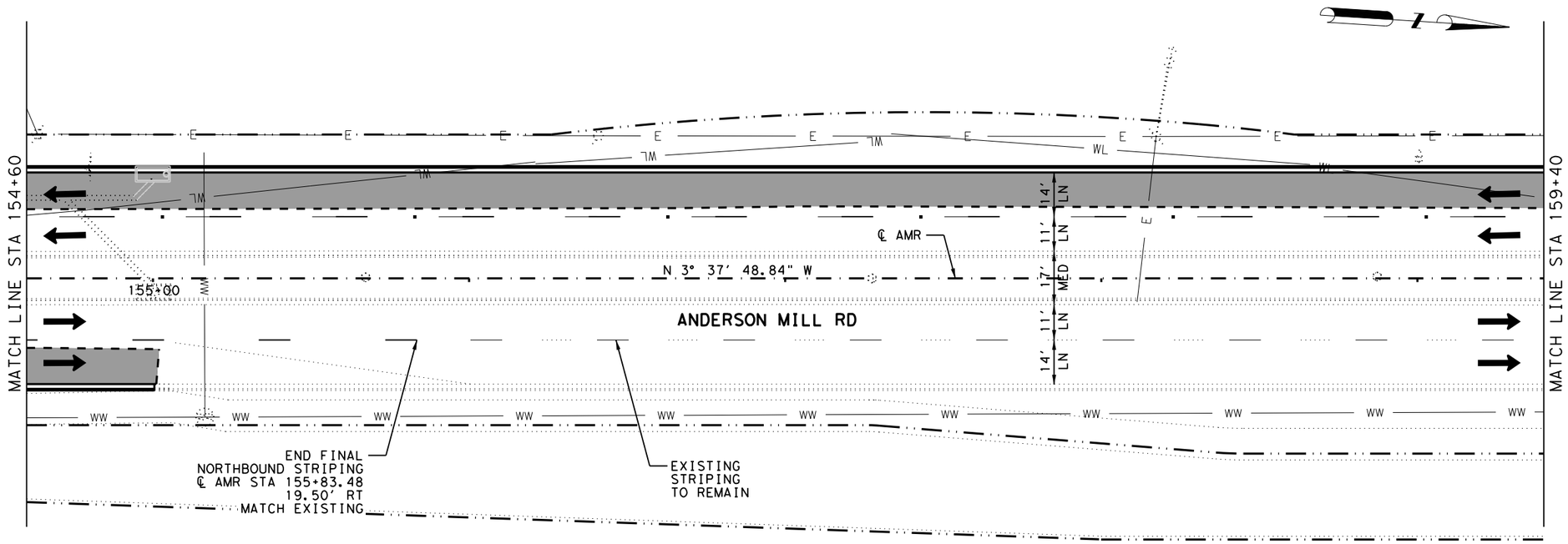


## LEGEND

- EXIST ROW
- EXIST EASEMENT
- PROP SAWCUT
- CONSTRUCTION PREVIOUS PHASE
- CONSTRUCTION THIS PHASE
- TYPE III BARRICADE
- CHANNELIZING DEVICES
- TRAFFIC MOVEMENT

0 20 40

NOTES:

1. DIMENSIONS, STATIONS AND OFFSETS GIVEN AT BACK OF CURB UNLESS OTHERWISE NOTED.
2. WHERE BUFFER BETWEEN LANE LINE AND WORK ZONES IS LESS THREE (3) FEET VERTICAL PANELS MAY BE USED AS CHANNELIZING DEVICES.
3. LOCATION OF EXISTING UTILITES SHOWN ARE APPROXIMATE. CONTRACTOR TO CONFIRM IN THE FIELD PRIOR TO CONSTRUCTION.
4. REFER TO ROADWAY PLAN AND PROFILE SHEETS FOR MORE INFORMATION.

| NO | DATE | ISSUES AND REVISIONS |
|---|---|---|

STATE OF TEXAS
AUSTIN S. HELTON
124922
LICENSED
PROFESSIONAL ENGINEER
8/5/2022

Kimley»Horn F-928
10814 JOLLYVILLE ROAD
BLDG. 4, STE 300
AUSTIN, TX 78759
PHONE: 512-418-1771

# TRAFFIC CONTROL PLAN PHASE 3

SHEET 4 OF 4

ANDERSON MILL ROAD PHASE 2

CEDAR PARK



FILENAME: AMR*TCP*PH3*04.dgn
PLOTTED: 8/5/2022 3:24:57 PM

THIS DETAIL FOR USE BY CITY FORCES ONLY

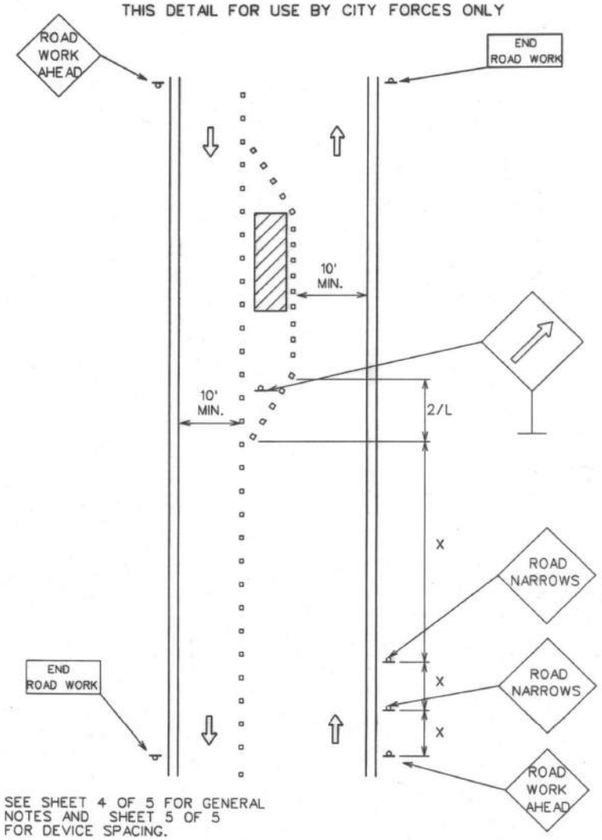


SEE SHEET 4 OF 5 FOR GENERAL NOTES AND SHEET 5 OF 5 FOR DEVICE SPACING.

| CITY OF AUSTIN DEPARTMENT OF PUBLIC WORKS | RESIDENTIAL ROAD NARROWS FOR CENTERLINE WORK | STANDARD NO. |
|---|---|---|
| Bill Gardner 11/13/07 ADOPTED | THE ARCHITECT/ENGINEER ASSUMES RESPONSIBILITY FOR APPROPRIATE USE OF THIS STANDARD. | 804S-1A 1 OF 5 |

THIS DETAIL FOR USE BY CITY FORCES ONLY

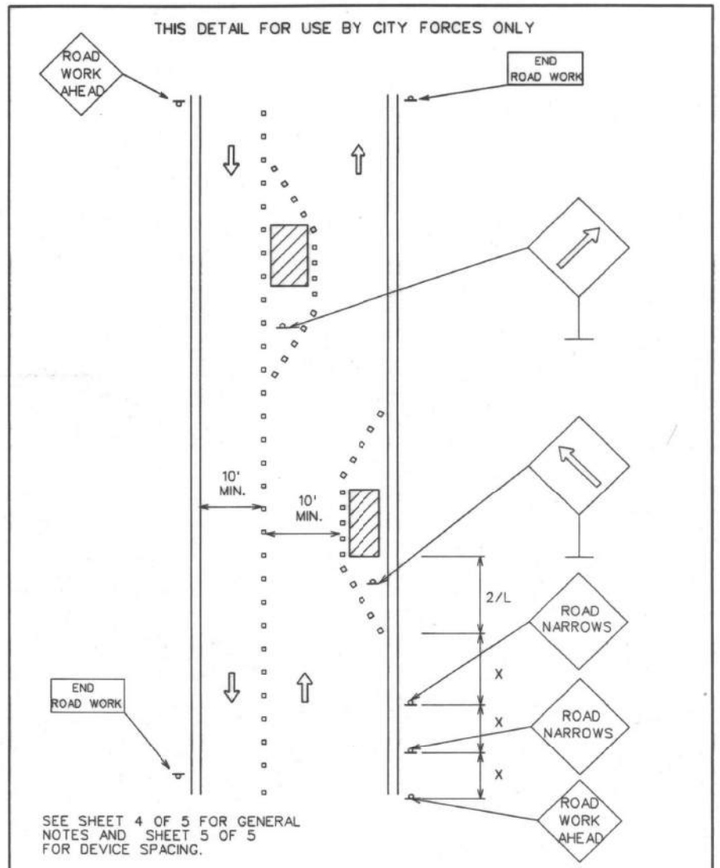


SEE SHEET 4 OF 5 FOR GENERAL NOTES AND SHEET 5 OF 5 FOR DEVICE SPACING.

| CITY OF AUSTIN DEPARTMENT OF PUBLIC WORKS | RESIDENTIAL ROAD NARROWS FOR CL/CURB WORK | STANDARD NO. |
|---|---|---|
| Bill Gardner 11/13/07 ADOPTED | THE ARCHITECT/ENGINEER ASSUMES RESPONSIBILITY FOR APPROPRIATE USE OF THIS STANDARD. | 804S-1A 2 OF 5 |

THIS DETAIL FOR USE BY CITY FORCES ONLY

NOTE:
THIS INFORMATION ALSO SHALL BE USED WHEN WORK IS BEING PERFORMED IN THE LANE ADJACENT TO THE CENTERLINE. IN THIS CASE, THE RIGHT LANE SIGN SHALL BE SUBSTITUTED.

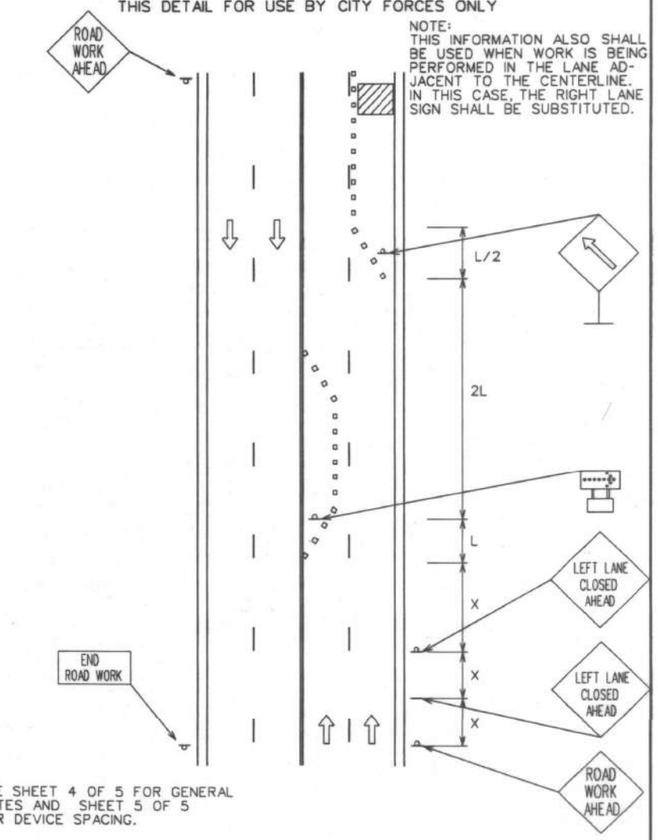


SEE SHEET 4 OF 5 FOR GENERAL NOTES AND SHEET 5 OF 5 FOR DEVICE SPACING.

| CITY OF AUSTIN DEPARTMENT OF PUBLIC WORKS | TEMPORARY ARTERIAL ONE LANE CLOSURE-LEFT LANE | STANDARD NO. |
|---|---|---|
| Bill Gardner 11/13/07 ADOPTED | THE ARCHITECT/ENGINEER ASSUMES RESPONSIBILITY FOR APPROPRIATE USE OF THIS STANDARD. | 804S-1A 3 OF 5 |

| NO | DATE | ISSUES AND REVISIONS |
|---|---|---|


Kimley»Horn F-928
10814 JOLLYVILLE ROAD
BLDG. 4, STE 200
AUSTIN, TX 78759
PHONE: 512-418-1771


STANDARD DETAILS
TCP
SHEET 1 OF 6
ANDERSON MILL ROAD PHASE 2

CEDAR PARK



FILENAME: AMR*TCP*STD*01.dgn
PLOTTED: 8/5/2022 3:25:10 PM

THIS DETAIL FOR USE BY CITY FORCES ONLY

1. ALL SETUPS SHALL BE IN ACCORDANCE WITH THE CURRENT ADDITION OF THE TEXAS MANUAL ON UNIFORM TRAFFIC CONTROL DEVICES AND THE CITY OF AUSTIN TRANSPORTATION CRITERIA MANUAL.
2. TO DETERMINE APPROPRIATE DEVICES AND SIGN SIZES TO BE USED, REFER TO STANDARD 804S-5. SHEETS 5, 6 AND 7 OF 11.
3. FOR INTERMEDIATE-TERM SITUATIONS, WHEN IT IS NOT FEASIBLE TO REMOVE AND RESTORE PAVEMENT MARKINGS, THE CHANNELIZATION MUST BE MADE DOMINANT BY USING A VERY CLOSE DEVICE SPACING. THIS IS ESPECIALLY IMPORTANT IN LOCATIONS OF CONFLICTING INFORMATION, SUCH AS WHERE TRAFFIC IS DIRECTED OVER A DOUBLE YELLOW CENTERLINE. IN SUCH LOCATIONS, A MAXIMUM CHANNELIZING DEVICE SPACING OF 3 m (10') IS REQUIRED.
4. FOR LONG TERM STATIONARY WORK, ALL CONFLICTING PAVEMENT MARKINGS MUST BE REMOVED AND CENTERLINE STRIPING PROVIDED WHERE TWO WAY TRAFFIC IS IN ADJACENT LANES.
5. FOR TEMPORARY PAVEMENT MARKING REQUIREMENTS SEE STANDARD 804S-3.
6. FOR ONE-WAY AND MULTI-LANE ROADWAYS THE "LANE BLOCKED" SIGN MAY BE USED IN LIEU OF THE "LANE CLOSED AHEAD" SIGN. THE NUMBER OF DIGITS ON THE SIGN SHALL NOT BE GREATER THAN THE NUMBER OF LANES PRESENT ON THE ROADWAY. THE "X" SHALL BE PLACED UNDER THE NUMBER OF LANE(S) BLOCKED.
7. FOR FLAGGING OPERATION REQUIREMENTS SEE STANDARD 804S-2.
8. CONTRACTOR SHALL PROVIDE SIDEWALK CLOSURES, CROSSWALK CLOSURES OR WALKWAY BYPASS WHEREVER PEDESTRIAN MOVEMENTS ARE AFFECTED BY CONSTRUCTION ACTIVITIES. ALL SIDEWALKS AND CROSSWALKS SHALL BE ACCESSIBLE WHEN CONTRACTOR IS NOT WORKING UNLESS APPROVED BY THE TRANSPORTATION DIVISION.
9. FOR EXCAVATION PROTECTION AND SAFETY FENCE REQUIREMENTS SEE STANDARD 804S-4.
10. THE USE OF ARROW DISPLAYS ARE REQUIRED ON ALL LANE CLOSURES. THE CONTRACTOR SHALL PROVIDE ONE (1) STAND-BY UNIT IN GOOD WORKING CONDITION AT THE JOB SITE, READY FOR USE IF THE OPERATION REQUIRES 24-HOUR A DAY LANE CLOSURE SET-UPS.
11. WHEN ACTIVITY ENCROACHES OR BLOCKS A BIKE LANE, SIGNS ARE REQUIRED TO INDICATE BIKE LANE CLOSURES.

| CITY OF AUSTIN<br>DEPARTMENT OF PUBLIC WORKS | GENERAL NOTES | |
|---|---|---|
| Bill Gardner 11/13/07<br>ADOPTED | THE ARCHITECT/ENGINEER ASSUMES RESPONSIBILITY FOR APPROPRIATE USE OF THIS STANDARD. | STANDARD NO.<br>804S-1A<br>4 OF 5 |

THIS DETAIL FOR USE BY CITY FORCES ONLY

**Typical Transition Lengths and Suggested Maximum Spacing of Devices**

| | | | Minimum Desirable Taper Lengths (L) Meters (Feet) | | | Suggested Max. Device Spacing | | Suggested Sign Spacing Meters (Feet) |
|---|---|---|---|---|---|---|---|---|
| Speed KMPH | Posted Speed MPH | Formula | 3.0(10) Offset Meters (feet) | 3.3(11) Offset Meters (feet) | 3.6(12) Offset Meters (feet) | On a taper Meters (feet) | On a tangent Meters (feet) | "X" Dimension |
| 50 | 30 | $L=\frac{WS^2}{60}$ | 45 (150) | 50 (165) | 55 (180) | 9 (30) | 15-20 (60-75) | 40 (120) |
| 55 | 35 | | 65 (205) | 70 (225) | 75 (245) | 10 (35) | 25-25 (70-90) | 50 (160) |
| 65 | 40 | | 80 (265) | 90 (295) | 100 (320) | 12 (40) | 25-30 (80-100) | 75 (240) |
| 70 | 45 | L=WS | 135 (450) | 150 (495) | 165 (540) | 13 (45) | 25-30 (90-110) | 100 (320) |
| 80 | 50 | | 150 (500) | 165 (550) | 180 (600) | 15 (50) | 30-35 (100-125) | 120 (400) |
| 90 | 55 | | 165 (550) | 185 (605) | 200 (660) | 16 (55) | 35-40 (110-140) | 150 (500) |
| 95 | 60 | | 180 (600) | 200 (660) | 220 (720) | 18 (60) | 40-45 (120-150) | 180 (600) |
| 105 | 65 | | 195 (650) | 215 (715) | 235 (780) | 19 (65) | 40-50 (130-165) | 210 (700) |
| 115 | 70 | | 215 (700) | 235 (770) | 255 (840) | 21 (70) | 45-55 (140-175) | 240 (800) |

LEGEND
- Channelizing devices
- Trailer mounted flashing arrow board
- Flagger

| CITY OF AUSTIN<br>DEPARTMENT OF PUBLIC WORKS | DEVICE SPACING | |
|---|---|---|
| Bill Gardner 11/13/07<br>ADOPTED | THE ARCHITECT/ENGINEER ASSUMES RESPONSIBILITY FOR APPROPRIATE USE OF THIS STANDARD. | STANDARD NO.<br>804S-1A<br>5 OF 5 |

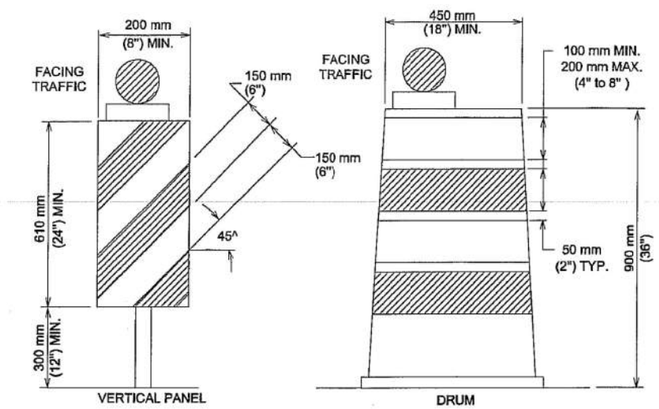


LONG TERM AND INTERMEDIATE TERM STATIONARY WORK

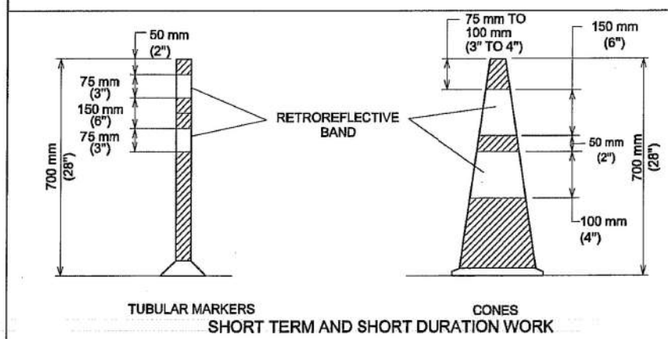


SHORT TERM AND SHORT DURATION WORK

SEE STANDARD 804S-5
SHEET 12 OF 13 AND SHEET 13 OF 13
FOR GENERAL NOTES AND DEVICE SPACING.

| CITY OF AUSTIN<br>DEPARTMENT OF PUBLIC WORKS | CHANNELIZING DEVICES | |
|---|---|---|
| 1/4/10<br>ADOPTED | THE ARCHITECT/ENGINEER ASSUMES RESPONSIBILITY FOR APPROPRIATE USE OF THIS STANDARD. | STANDARD NO.<br>804S-5<br>1 OF 13 |

| NO | DATE | ISSUES AND REVISIONS |
|---|---|---|


Kimley»Horn F-928
10814 JOLLYVILLE ROAD
BLDG. 4, STE 200
AUSTIN, TX 78759
PHONE: 512-418-1771


STANDARD DETAILS
TCP
SHEET 2 OF 6
ANDERSON MILL ROAD PHASE 2

CEDAR PARK



FILENAME: AMR*TCP*STD*02.dgn
PLOTTED: 8/5/2022 3:25:29 PM

## CHANNELIZING DEVICES

1. ALL CHANNELIZING DEVICES SHALL HAVE WARNING LIGHTS OR LARGE REFLECTORS WHEN USED AT NIGHT. FLASHING WARNING LIGHTS MAY BE PLACED ON CHANNELIZING DEVICES USED SINGULARLY OR IN GROUPS TO MARK A SPOT CONDITION. WARNING LIGHTS ON CHANNELIZING DEVICES USED IN A SERIES SHALL BE STEADY-BURN. CHANNELIZING DEVICES IN TAPERS AT NIGHT SHALL HAVE TYPE C WARNING LIGHTS.
2. THE RETROREFLECTIVE MATERIAL USED ON CHANNELIZING DEVICES SHALL HAVE A SMOOTH, SEALED OUTER SURFACE.
3. THE NAME AND TELEPHONE NUMBER OF THE AGENCY, CONTRACTOR OR SUPPLIER SHALL BE SHOWN ON THE NON-RETROREFLECTIVE SURFACE OF ALL CHANNELIZING DEVICES. THE LETTERS AND NUMBERS SHALL BE A NON-RETROREFLECTIVE COLOR AND NOT OVER 50 mm (2") IN HEIGHT.
4. PARTICULAR ATTENTION SHOULD BE GIVEN TO ASSURE THAT CHANNELIZING DEVICES ARE MAINTAINED AND KEPT CLEAN, VISIBLE AND PROPERLY POSTITIONED AT ALL TIMES. DEVICES SHALL BE REPLACED THAT ARE DAMAGED AND HAVE LOST A SIGNIFICANT AMOUNT OF THEIR RETROREFLECTIVITY AND EFFECTIVENESS.

## CONES

CONES SHALL PREDOMINANTLY BE ORANGE, FLUORESCENT RED-ORANGE, OR FLUORESCENT YELLOW-ORANGE IN COLOR, NOT LESS THAN 70 mm (28") IN HEIGHT, AND SHALL BE MADE OF A MATERIAL THAT CAN BE STRUCK WITHOUT DAMAGING VEHICLES ON IMPACT. FOR NIGHT TIME USE, CONES SHALL BE RETROREFLECTIVE OR EQUIPPED WITH LIGHTING DEVICES FOR MAXIMUM VISIBLITY. RETROREFLECTION OF CONES SHALL BE PROVIDED BY A WHITE BOND 150 mm (6") WIDE, NO MORE THAN 75 TO 100 mm (3 TO 4") FROM THE TOP OF THE CONE, AND AN ADDITIONAL 100 mm (4") WHITE BAND A MINIMUM OF 50 mm (2") BELOW THE 150 mm (6") BAND. TRAFFIC CONES ARE NORMALLY USED FOR SHORT-TERM STATIONARY AND SHORT DURATION WORK. HOWEVER, CONES MAY BE USED FOR INTERMEDIATE-TERM STATIONARY WORK AT NIGHT, IF THE SITE IS CONTINUOUSLY MANNED.

## TUBULAR MARKERS

TUBULAR MARKERS SHALL PREDOMINANTLY BE ORANGE IN COLOR, NOT LESS THAN 700 mm (28") IN HEIGHT, A MINIMUM 50 mm (2") WIDE WHEN FACING TRAFFIC AND MADE OF A MATERIAL THAT CAN BE STRUCK WITHOUT DAMAGING VEHICLES. FOR NIGHT TIME USE, TUBULAR MARKERS SHALL BE RETROREFLECTIVE PROVIDED BY TWO (2) 75 mm (3") WIDE WHITE BANDS PLACED A MAXIMUM OF 50 mm (2") FROM THE TOP, WITH A MAXIMUM OF 150 mm (6") BETWEEN BANDS. TUBULAR MARKERS ARE NORMALLY USED FOR SHORT-TERM STATIONARY AND SHORT DURATION WORK. HOWEVER, TUBULAR MARKERS MAY BE USED FOR INTERMEDIATE-TERM STATIONARY WORK AT NIGHT, IF THE SITE IS CONTINUOUSLY MANNED.

## VERTICAL PANELS

VERTICAL PANELS SHALL BE 200 TO 300 mm (8 TO 12") WIDE AND AT LEAST 600 mm (24") IN HEIGHT. THEY SHALL HAVE ORANGE AND WHITE STRIPES, AND BE RETROREFLECTIVE. PANEL STRIPE WIDTHS SHALL BE 150 mm (6") EXCEPT WHERE PANEL HEIGHTS ARE LESS THAN 900 mm (36"), WHEN 100 mm (4") STRIPES MAY BE USED. IF USED FOR TWO-WAY TRAFFIC, BACK-TO-BACK PANELS SHALL BE USED.

## DRUMS

1. DRUMS USED FOR TRAFFIC WARNING OR CHANNELIZATION SHALL BE CONSTRUCTED OF LIGHT-WEIGHT FLEXIBLE AND DEFORMABLE MATERIALS AND BE A MINIMUM OF 900 mm (36") IN HEIGHT, AND HAVE AT LEAST 450 mm (18") MINIMUM WIDTH, REGARDLESS OF OREINTATION. STEEL DRUMS SHALL NOT BE USED. THE MARKINGS ON DRUMS SHALL BE HORIZONTAL, CIRCUNFERENTIAL, ALTERNATING ORANGE AND WHITE RETROREFLECTIVE STRIPES 100 TO 200 mm (4 TO 8") WIDE. EACH DRUM SHALL HAVE A MINIMUM OF TWO (2) ORANGE AND TWO (2) WHITE STRIPES. ANY NON-RETROREFLECTIVE SPACES BETWEEN THE HORIZONTAL ORANGE AND WHITE STRIPES, SHALL NOT EXCEED 50 mm (2") WIDE. DRUMS SHALL HAVE CLOSED TOPS THAT WILL NOT ALLOW COLLECTION OF ROADWORK OR OTHER DEBRIS.
2. DRUMS SHOULD NOT BE WEIGHTED WITH SAND, WATER OR ANY MATERIAL TO AN EXTENT THAT WOULD MAKE THE HAZARDOUS TO MOTORISTS, PEDESTRIANS OR WORKERS. WHEN THEY ARE USED IN REGIONS SUSCEPTIBLE TO FREEZING, THEY SHOULD HAVE DRAINAGE HOLES IN THE BOTTOM SO WATER WILL NOT ACCUMULATE AND FREEZE,CAUSING A HAZARD IF STRUCK BY A MOTORIST. BALLAST SHALL NOT BE PLACED ON TOP OF THE DRUM.

| CITY OF AUSTIN<br>DEPARTMENT OF PUBLIC WORKS | CHANNELIZING DEVICES | |
|---|---|---|
| 1/4/10<br>ADOPTED | THE ARCHITECT/ENGINEER ASSUMES RESPONSIBILITY FOR APPROPRIATE USE OF THIS STANDARD. | STANDARD NO.<br>804S-5<br>2 OF 13 |

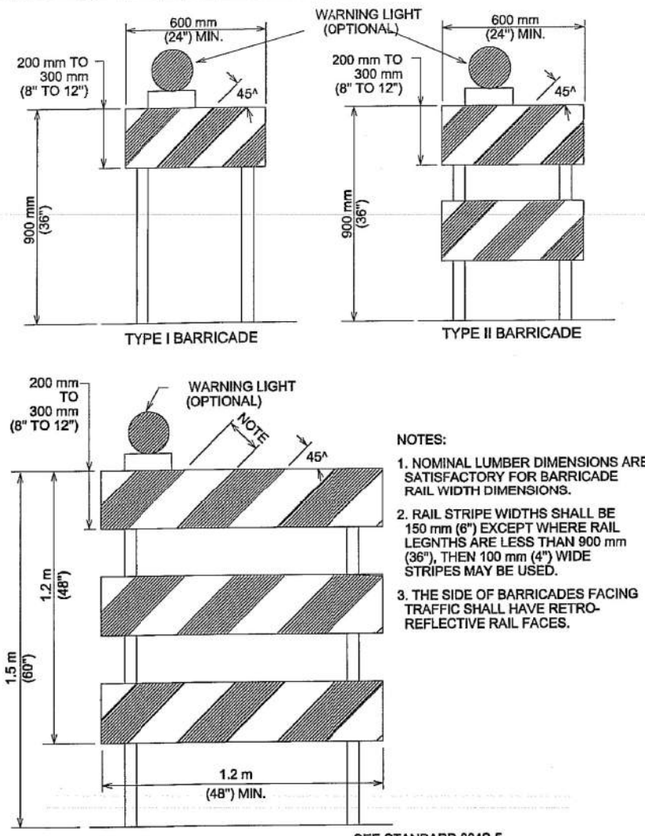


NOTES:

1. NOMINAL LUMBER DIMENSIONS ARE SATISFACTORY FOR BARRICADE RAIL WIDTH DIMENSIONS.
2. RAIL STRIPE WIDTHS SHALL BE 150 mm (6") EXCEPT WHERE RAIL LEGNTHS ARE LESS THAN 900 mm (36"), THEN 100 mm (4") WIDE STRIPES MAY BE USED.
3. THE SIDE OF BARRICADES FACING TRAFFIC SHALL HAVE RETRO-REFLECTIVE RAIL FACES.

SEE STANDARD 804S-5
SHEET 12 OF 13 AND SHEET 13 OF 13
FOR GENERAL NOTES AND DEVICE SPACING.

| CITY OF AUSTIN<br>DEPARTMENT OF PUBLIC WORKS | BARRICADES | |
|---|---|---|
| 1/4/10<br>ADOPTED | THE ARCHITECT/ENGINEER ASSUMES RESPONSIBILITY FOR APPROPRIATE USE OF THIS STANDARD. | STANDARD NO.<br>804S-5<br>3 OF 13 |

## BARRICADES

1. BARRICADES SHALL BE OF THREE TYPES: TYPE I, TYPE II OR TYPE III.
2. STRIPES ON BARRICADE RAILS SHALL BE ALTERNATING ORANGE AND WHITE RETRO-REFLECTIVE STRIPES (SLOPING DOWNWARD AT AN ANGLE OF 45 DEGREES IN THE DIRECTION TRAFFIC IS TO PASS). THE STRIPES SHALL BE 150 mm (6") WIDE, EXCEPT WHERE RAIL LENGTHS ARE LESS THAN 900 mm (36"), WHEN 100 mm (4") WIDE STRIPES MAY BE USED.
3. WHERE A BARRICADE EXTENDS ENTIRELY ACROSS A ROADWAY, THE SURFACE STRIPES SHOULD SLOPE DOWNWARD IN THE DIRECTION TOWARD WHICH TRAFFIC MUST TURN. WHERE BOTH RIGHT AND LEFT TURNS ARE PROVIDED, THE STRIPES MAY SLOPE DOWN-WARD IN BOTH DIRECTIONS FROM THE CENTER OF THE BARRICADE OR BARRICADES. WHERE NO TURNS ARE INTENDED, THE STRIPES SHOULD SLOPE DOWNWARD TOWARD THE CENTER OF THE BARRICADE OR BARRICADES.
4. BARRICADE RAILS SHOULD BE SUPPORTED IN A MANNER THAT WILL ALLOW THEM TO BE SEEN BY THE MOTORIST AND PROVIDE A STABLE SUPPORT NOT EASILY BLOWN OVER BY THE WIND OR TRAFFIC. FOR TYPE I BARRICADES, THE SUPPORT MAY INCLUDE OTHER UNSTRIPED HORIZONTAL PANELS NECESSARY TO PROVIDE STABILITY.
5. BARRICADES ARE LOCATED ADJACENT TO TRAFFIC AND ARE THEREFORE SUBJECT TO IMPACT WITH ERRANT VEHICLES. BECAUSE OF THEIR VULNERABLE POSITION AND THE HAZARD THEY COULD CREATE, THEY SHOULD BE CONSTRUCTED OF LIGHTWEIGHT MATERIALS AND HAVE NO RIGID STAY BRACING FOR A-FRAME DESIGNS. ALL BARRICADE SYSTEMS SHOULD BE CRASHWORTHY.
6. ON HIGH-SPEED EXPRESSWAYS OR IN OTHER SITUATION WHERE BARRICADES MAY BE SUSCEPTIBLE TO OVERTURING IN THE WIND, SANDBAGS SHOULD BE USED FOR BALLASTING. SANDBAGS MAY BE PLACED ON PARTS OF THE FRAME OR STAYS TO PROVIDE THE REQUIRED BALLAST BUT SHALL NOT BE PLACED ON TOP OF ANY STRIPED RAIL. BARRICADES SHALL NOT BE BALLASTED BY HEAVY OBJECTS SUCH AS ROCKS OR CHUNKS OF CONCRETE.

| CITY OF AUSTIN<br>DEPARTMENT OF PUBLIC WORKS | BARRICADES | |
|---|---|---|
| 1/4/10<br>ADOPTED | THE ARCHITECT/ENGINEER ASSUMES RESPONSIBILITY FOR APPROPRIATE USE OF THIS STANDARD. | STANDARD NO.<br>804S-5<br>4 OF 13 |

| NO | DATE | ISSUES AND REVISIONS |
|---|---|---|


Kimley»Horn
F-928
10814 JOLLYVILLE ROAD
BLDG. 4, STE 200
AUSTIN, TX 78759
PHONE: 512-418-1771


STANDARD DETAILS
TCP
SHEET 3 OF 6
ANDERSON MILL ROAD PHASE 2

CEDAR PARK



FILENAME: AMR*TCP*STD*03.dgn
PLOTTED: 8/5/2022 3:25:51 PM

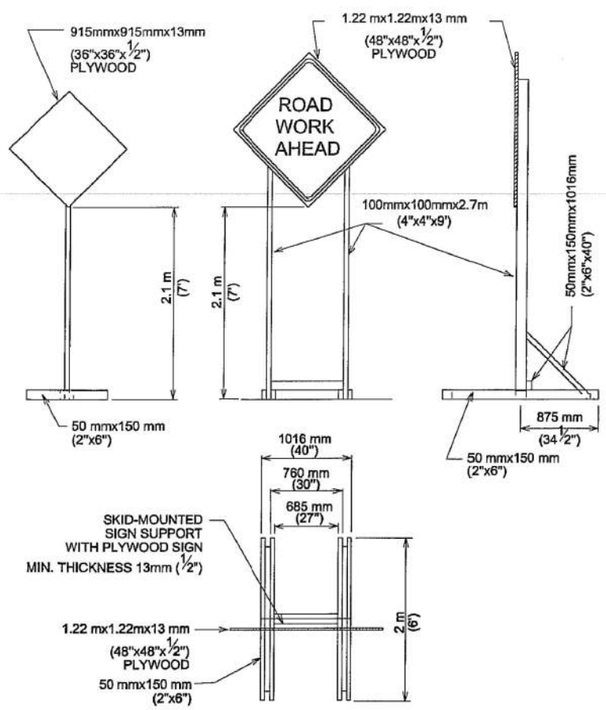


( LONG TERM AND INTERMEDIATE-TERM STATIONARY WORK)

TEMPORARY SIGN SUPPORT

SEE STANDARD 804S-5
SHEET 12 OF 13 AND SHEET 13 OF 13
FOR GENERAL NOTES AND DEVICE SPACING.

| CITY OF AUSTIN<br>DEPARTMENT OF PUBLIC WORKS | TRAFFIC CONTROL SIGNS | |
|---|---|---|
| 1/4/10<br>ADOPTED | THE ARCHITECT/ENGINEER ASSUMES RESPONSIBILITY FOR APPROPRIATE USE OF THIS STANDARD. | STANDARD NO.<br>804S-5<br>5 OF 13 |

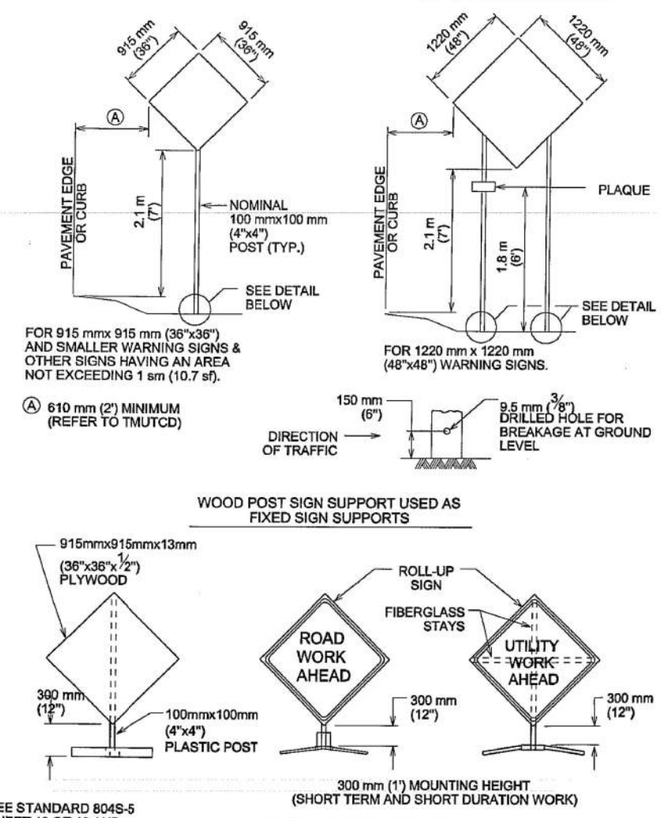


PORTABLE SIGN SUPPORT

SEE STANDARD 804S-5
SHEET 12 OF 13 AND
SHEET 13 OF 13 FOR
GENERAL NOTES AND DEVICE SPACING.

| CITY OF AUSTIN<br>DEPARTMENT OF PUBLIC WORKS | TRAFFIC CONTROL SIGNS | |
|---|---|---|
| 1/4/10<br>ADOPTED | THE ARCHITECT/ENGINEER ASSUMES RESPONSIBILITY FOR APPROPRIATE USE OF THIS STANDARD. | STANDARD NO.<br>804S-5<br>6 OF 13 |

1. WARNING SIGNS SHALL BE ORANGE, FLUORESCENT RED-ORANGE OR FLUORESCENT YELLOW-ORANGE IN COLOR. THE FLUORESCENT VERSIONS OF ORANGE PROVIDE HIGHER CONSPICUITY THAN STANDARD ORANGE, ESPECIALLY DURING TWILIGHT. ALL SIGNS USED AT NIGHT SHALL BE EITHER RETROREFLECTIVE, WITH A MATERIAL THAT HAS A SMOOTH, SEALED OUTER SURFACE, OR ILLUMINATED TO SHOW SIMILAR SHAPE AND COLOR BOTH DAY AND NIGHT. SIGN ILLUMINATION MAY BE EITHER INTERNAL OR EXTERNAL. ROADWAY LIGHTING DOES NOT MEET THE REQUIREMENTS FOR SIGN ILLUMINATION.
2. TYPE A FLASHING WARNING LIGHTS MAY BE USED IN CONJUNCTION WITH SIGNS AT NIGHT. STANDARD ORANGE FLAGS MAY BE USED FOR DAY TIME OPERATIONS. HOWEVER, NEITHER LIGHTS NOR FLAGS MAY BLOCK THE SIGN LEGEND.
3. SIGNS SHOULD BE LOCATED ON THE RIGHT-HAND SIDE OF THE ROADWAY. WHEN SPECIAL EMPHASIS IS NEEDED, SIGNS MAY BE PLACE ON BOTH THE LEFT AND RIGHT SIDES OF ROADWAY. SIGNS SHALL BE PLACED ON BOTH THE LEFT AND RIGHT SIDES OF ONE-WAY OR DIVIDED ROADWAYS. SIGNS USED FOR LONG-TERM STATIONARY AND INTERMEDIATE-TERM STATIONARY WORK SHALL BE MOUNTED AT A HEIGHT OF AT LEAST 2.1 m (7'), MEASURED FROM THE BOTTOM OF THE SIGN. THE HEIGHT TO THE BOTTOM OF A SECONDARY SIGN MOUNTED BELOW ANOTHER SIGN MAY BE 0.3 m (1') LESS THAN THE APPROPRIATE HEIGHT ABOVE.
4. SIGNS MAY BE MOUNTED ON PORTABLE SUPPORTS FOR SHORT-TERM, SHORT DURATION, MOBILE CONDITIONS AND EMERGENCIES. SIGNS MOUNTED ON PORTABLE SUPPORTS SHALL BE AT A HEIGHT OF AT LEAST 0.3 m (1'), MEASURED FROM THE BOTTOM OF THE SIGN.
5. ALL SIGN SYSTEMS SHOULD BE CRASHWORTHY. NO SIGN MOUNTS SHALL BLOCK OR IMPEDE SIDEALKS UNLESS NO OTHER OPTION IS AVAILABLE. ONLY SANDBAGS SHOULD BE USED FOR BALLASTING SIGN MOUNTS.

TABLE VI-3 TYPICAL CONSTRUCTION WARNING SIGN SIZE AND SPACING

| Roadway Classification | Posted Speed | Sign Spacing ☆ | Long-term Stationary Or Intermediate-term Stationary Approaching Warning Signs CW20 Series And CW22-1 Sign | | Short-term Stationary Or Short Duration Approach Warning Signs CW22 Series | | Other Warning Signs |
|---|---|---|---|---|---|---|---|
| | | | Standard | Minimum[4] | Standard | Minimum[4] | Standard |
| Conven. | KPH (MPH) | meter (feet) | mm (inches) | mm (inches) | mm (inches) | mm (inches) | mm (inches) |
| | 50 (30) | 40 (120) | 1220x1220 (48x48) | 915x915 (36x36) | | | |
| | 55 (35) | 60 (160) | | | 915x915 (36x36) | | 915x915 (36x36) |
| | 65 (40) | 75 (240) | | | | | |
| | 70 (45) | 100 (320) | | Use Standard Size | | Use Standard Size | |
| | 80 (50) | 120 (400) | | | | | |
| | 90 (55) | 150 2 (500) | | | | | |
| | 100 (60) | 180 2 (600) | | | 1220x1220 (48x48) | | 1220x1220 (48x48) |
| | 105 (65) | 210 2 (700) | | | | | |
| | 115 (70) | 240 2 (800) | | | | | |
| Exp. or Fwy | ☆☆ | ☆☆ 3 | | | ☆☆☆ | ☆☆☆ | ☆☆☆ |

☆ MINIMUM DISTANCE FROM WORK TO 1st ADVANCE WARNING SIGN AND/OR DISTANCE BETWEEN EACH ADDITIONAL SIGN.
☆☆ FOR TYPICAL SIGN SPACINGS ON EXPRESSWAYS AND FREEWAYS, REFER TO THE CURRENT ADDITION OF TMUTCD.
☆☆☆ SMALLER SIGN SIZES MAY BE USED WHERE SIGN DESIGNS HAVE NOT BEEN INCLUDED IN THE "STANDARD HIGHWAY SIGNS DESIGN MANUAL".

1. SPECIAL OR LARGER SIZE SIGNS MAY BE USED AS NECESSARY.
2. DISTANCE BETWEEN SIGNS SHOULD BE INCREASED AS REQUIRED TO HAVE 450 m (1500') OR MORE ADVANCE WARNING.
3. DISTANCE BETWEEN SIGNS SHOULD BE INCREASED AS REQUIRED TO HAVE A 0.8 km (1/2 MILE) OR MORE ADVANCE WARNING.
4. FOR USE ONLY ON SECONDARY ROADS OR CITY STREETS WHERE SPEEDS ARE LOW.

| CITY OF AUSTIN<br>DEPARTMENT OF PUBLIC WORKS | TRAFFIC CONTROL SIGNS | |
|---|---|---|
| 1/4/10<br>ADOPTED | THE ARCHITECT/ENGINEER ASSUMES RESPONSIBILITY FOR APPROPRIATE USE OF THIS STANDARD. | STANDARD NO.<br>804S-5<br>7 OF 13 |

| NO | DATE | ISSUES AND REVISIONS |
|---|---|---|

Kimley»Horn F-928
10814 JOLLYVILLE ROAD
BLDG. 4, STE 200
AUSTIN, TX 78759
PHONE: 512-418-1771

STANDARD DETAILS
TCP
SHEET 4 OF 6
ANDERSON MILL ROAD PHASE 2

CEDAR PARK



FILENAME: AMR*TCP*STD*04.dgn
PLOTTED: 8/5/2022 3:26:13 PM

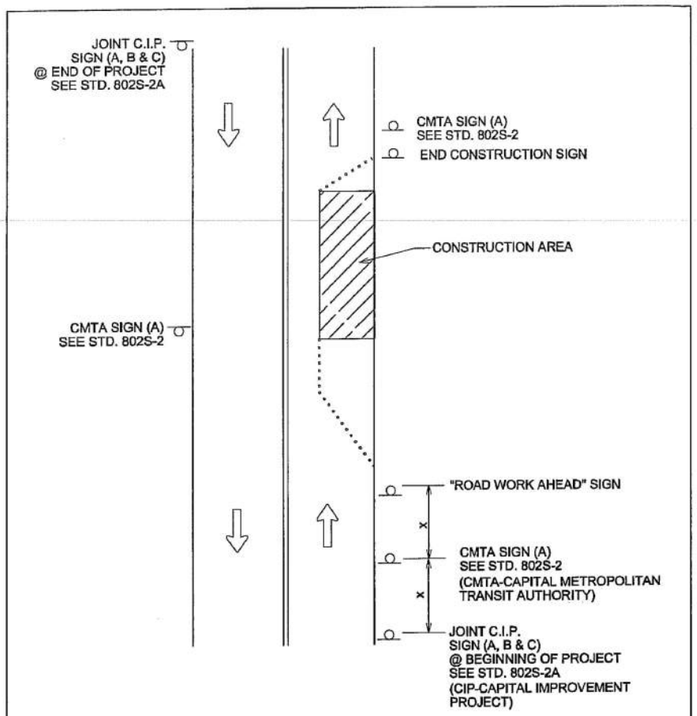


NOTES:

1. OTHER REQUIRED SIGNS NOT SHOWN FOR CLARITY.
2. "X" DISTANCES SAME AS STANDARD TABLE SHOWN ON SHEET 13 OF 13.

SEE STANDARD 804S-5
SHEET 12 OF 13 AND SHEET 13 OF 13
FOR GENERAL NOTES AND DEVICE SPACING.

| CITY OF AUSTIN DEPARTMENT OF PUBLIC WORKS | TYPICAL CMTA/C.I.P. SIGN LOCATIONS | |
|---|---|---|
| 1/4/10 ADOPTED | THE ARCHITECT/ENGINEER ASSUMES RESPONSIBILITY FOR APPROPRIATE USE OF THIS STANDARD. | STANDARD NO. 804S-5 8 OF 13 |

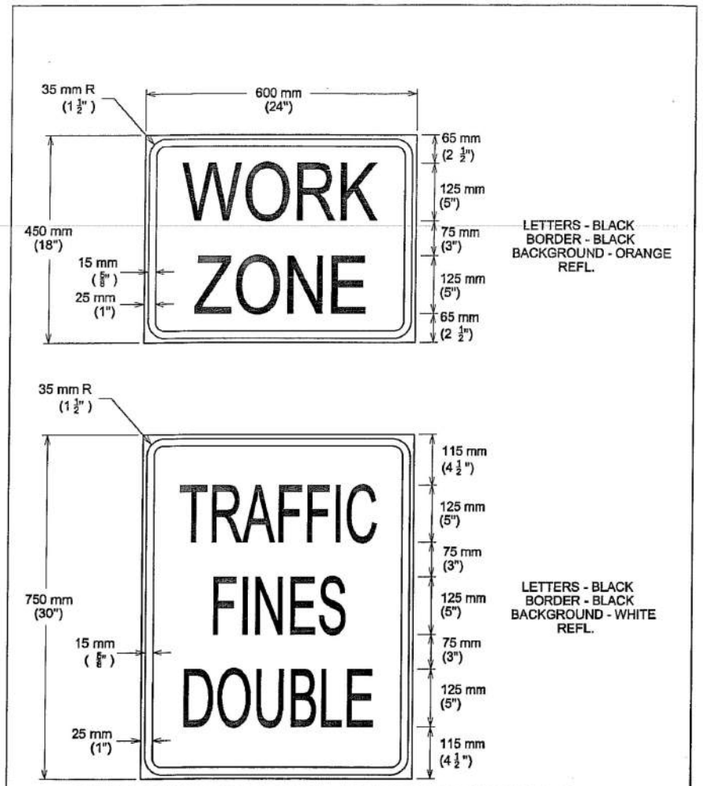


SEE STANDARD DETAIL 804S-5
SHEET 5 OF 13 FOR SKID-
MOUNTED SIGN SUPPORT.

| CITY OF AUSTIN DEPARTMENT OF PUBLIC WORKS | SPECIAL WORK ZONE SIGNS | |
|---|---|---|
| 1/4/10 ADOPTED | THE ARCHITECT/ENGINEER ASSUMES RESPONSIBILITY FOR APPROPRIATE USE OF THIS STANDARD. | STANDARD NO. 804S-5 9 OF 13 |

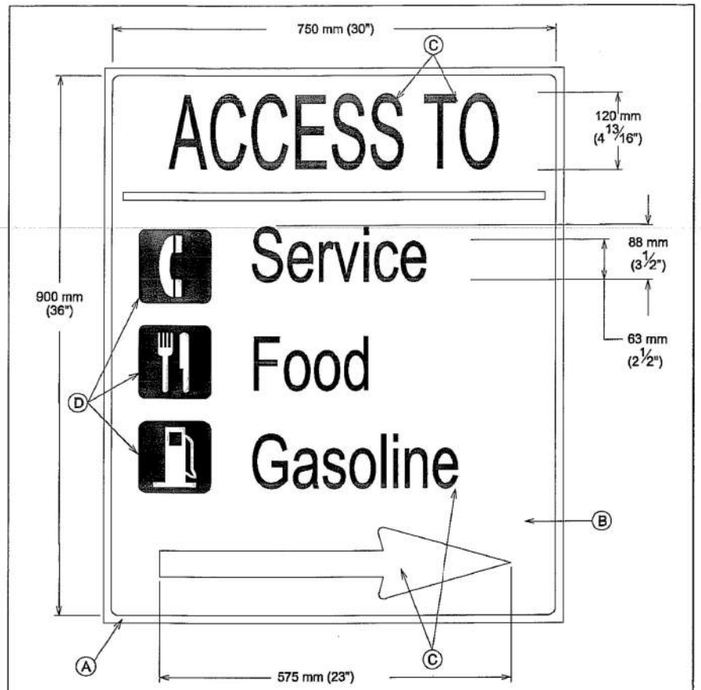


(A) 50 mm (1/2") WHITE RETROREFLECTIVE BORDER
(B) BLUE RETROFEFLECTIVE BACKGROUND
(C) WHITE RETROREFLECTIVE ARROW AND LETTERS
(D) WHITE RETROREFELCTIVE BUSINESS LOGO

NOTES:

1. CONTRACTORS CAN MAKE BUSINESS NAMES REMOVABLE/CHANGEABLE AS AN OPTION.
2. BUSINESS LOGO ARE OPTIONAL. IF USED LETTERING MUST BE MINIMIZED.

| CITY OF AUSTIN DEPARTMENT OF PUBLIC WORKS | SPECIAL WORK ZONE SIGNS | |
|---|---|---|
| 1/4/10 ADOPTED | THE ARCHITECT/ENGINEER ASSUMES RESPONSIBILITY FOR APPROPRIATE USE OF THIS STANDARD. | STANDARD NO. 804S-5 10 OF 13 |

| NO | DATE | ISSUES AND REVISIONS |
|---|---|---|

Kimley»Horn F-928
10814 JOLLYVILLE ROAD
BLDG. 4, STE 200
AUSTIN, TX 78759
PHONE: 512-418-1771

STANDARD DETAILS
TCP
SHEET 5 OF 6
ANDERSON MILL ROAD PHASE 2

CEDAR PARK



FILENAME: AMR*TCP*STD*05.dgn
PLOTTED: 8/5/2022 3:26:35 PM

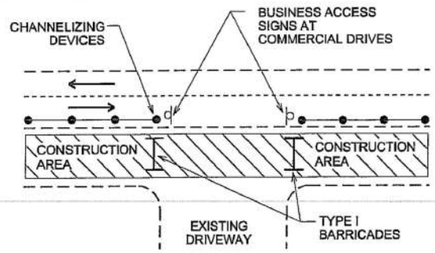


DRIVEWAY ACCESS BARRICADE DETAIL

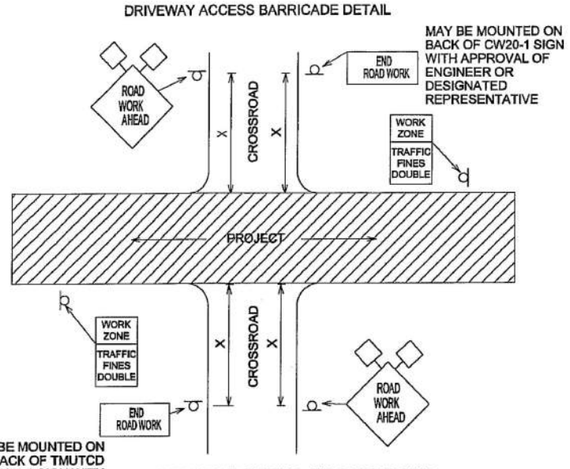


CROSSROAD SIGNING AND BARRICADING

SEE STANDARD 804S-5
SHEET 12 OF 13 AND SHEET 13 OF 13
FOR GENERAL NOTES AND DEVICE SPACING.

| CITY OF AUSTIN<br>DEPARTMENT OF PUBLIC WORKS | SIGNING AND BARRICADING<br>CROSSROAD & DRIVEWAY | |
|---|---|---|
| 1/4/10<br>ADOPTED | THE ARCHITECT/ENGINEER ASSUMES RESPONSIBILITY FOR APPROPRIATE USE OF THIS STANDARD. | STANDARD NO.<br>804S-5<br>11 OF 13 |

1. ALL TRAFFIC CONTROL DEVICES, SIGNS, BARRICADES AND WARNING SIGNS SHALL BE FURNISHED, PLACED, CONSTRUCTED AND MAINTAINED IN THE APPROPRIATE TYPES AND SIZES AND FLAGGER OPERATIONS EXECUTED IN ACCORDANCE WITH THE CURRENT EDITION OF THE TEXAS MANUAL ON UNIFORM CONTROL DEVICES (TMUTCD), THE CITY OF AUSTIN STANDARD SPECIFICATIONS SERIES 800 AND THE CITY OF AUSTIN TRANSPORTATION CRITERIA MANUAL, OR AS DIRECTED BY THE ENGINEER OR DESIGNATED REPRESENTATIVE. IF A CONFLICT ARISES THEN THE CITY OF AUSTIN TRANSPORTATION CRITERIA MANUAL SHALL CONTROL UNLESS OTHERWISE INSTRUCTED BY THE ENGINEER OR DESIGNATED REPRESENTATIVE.
2. THE CONTRACTOR SHALL NOTIFY THE TRANSPORTATION DIVISION OF THE DEPARTMENT OF PUBLIC WORKS AT 974-7024 NO LATER THAN THE MONDAY OF THE WEEK DURING WHICH THE CONTRACTOR INTENDS TO SET UP BARRICADES TO START CONSTRUCTION.
3. PROPOSED CONSTRUCTION TRAFFIC MOVEMENTS MAY REQUIRE EXISTING SIGNAL HEADS TO BE RELOCATED. THE CITY OF AUSTIN WILL REVIEW SIGNAL HEAD LOCATIONS DURING CONSTRUCTION AND PERFORM THE REQUIRED ADJUSTMENTS. THE CONTRACTOR SHALL CONTACT THE TRANSPORTATION DIVISION OF THE DEPARTMENT OF PUBLIC WORKS AT 974-7024, THREE (3) DAYS PRIOR TO PLACMENT ANY TRAFFIC CONTROLS WHICH MAY REQUIRE SIGNAL HEAD ADJUSTMENTS/RELOCATION.
4. THE CONTRACTOR SHALL PROVIDE ONE (1) FULL-TIME OFF-DUTY, UNIFORMED AUSTIN POLICE DEPARTMENT CERTIFIED PEACE OFFICER AND ONE (1) VEHICLE OF THE TYPE APPROVED BY THE ENGINEER OR DESIGNATED REPRESENTATIVE FOR TEMPORARY LANE CLOSURES WHEN UNDERSEALING, MILLING, PAVING AND WHEN WORKING IN INTERSECTIONS AS PART OF THE TRAFFIC CONTROL OPERATIONS. THE PEACE OFFICER SHALL BE ABLE TO SHOW PROOF OF CERTIFICATION BY THE TEXAS COMMISSION ON LAW ENFORCEMENT OFFICER STANDARDS.
5. THE CONTRACTOR SHALL NOTIFY ALL OTHER GOVERNMENTAL AGENCIES WHOSE RIGHTS-OF-WAY ARE AFFECTED BY HIS WORK ACTIVITIES. THE CONTRACTOR SHALL PROVIDE ANY ADDITIONAL TRAFFIC CONTROL DEVICES THAT THEY MAY NEED.
6. THE CONTRACTOR SHALL MAINTAIN ONE (1) DUST-FREE LANE OF TRAFFIC IN EACH DIRECTION AT ALL TIMES, UNLESS OTHERWISE NOTED IN THE DRAWINGS OR APPROVED THE ENGINEER OR DESIGNATED REPRESENTATIVE.
7. THERE SHALL BE A MINIMUM OF THREE (3) METERS (10 FEET) CLEAR WIDTH FOR EACH LANE OF TRAFFIC IN CHANNELIZED AREAS, UNLESS OTHERWISE NOTED ON THE DRAWINGS OR APPROVED BY THE ENGINEER OR DESIGNATED REPRESENTATIVE.
8. THE CONTRACTOR SHALL MAINTAIN DRIVEWAY ACCESS AT ALL TIMES. IF ACCESS CANNOT BE MAINTAINED, THE CONTRACTOR WITH THE APPROVAL OF THE ENGINEER OR DESIGNATED REPRESENTATIVE SHALL PROVIDE AT LEAST 24 HOUR WRITTEN NOTICE OF LIMITED ACCESS TO AFFECTED PROPERTY OWNERS. THE CONTRACTOR SHALL PROVIDE BUSINESS ACCESS SIGNS AS NEEDED TO NFORM DRIVERS OF THE LOCATIONS OF ALL DRIVEWAYS.
9. TEMPORARY LANE CLOSURES IN THE CENTRAL BUSINESS DISTRICT (CBD) OR ON ARTERIAL STREETS SHALL NOT BE PERMITTED DURING THE HOURS OF 7 AM TO 9 AM AND 4 PM TO 6PM MONDAY THROUGH FRIDAY UNLESS PRIOR APPROVAL HAS BEEN OBTAINED FROM THE TRANSPORTATION DIVISION.
10. TRAFFIC CONTROL SHOWN ON STANDARD DETAILS IS TYPICAL. ADDITIONAL SIGNING AND/OR BARRICADING, AS WELL AS TEMPORARY PAVEMENT MARKINGS AND OBLITERATION/RESTORATION OF EXISTING PAVEMENT MARKINGS, MAY BE REQUIRED DEPENDING ON FIELD CONDITIONS. FIELD ADJUSTMENTS TO TRAFFIC CONTROLS WILL NOT BE PAID FOR DIRECTLY, BUT WILL BE CONSIDERED SUBSIDIARY TO ITEM NO. 803S "BARRICADES, SIGNS AND TRAFFIC HANDLING".
11. THE CONTRACTOR SHALL DESIGNATE A COMPETENT PERSON FOR TRAFFIC CONTROL. THE COMPETENT PERSON SHALL MAKE INSPECTIONS OF THE TRAFFIC CONTROL DEVICES AT LEAST TWO (2) TIMES A DAY (ONCE AT THE BEGINNING OF THE DAY AND ONCE AT THE END OF THE DAY), INCLUDING NON-WORKING DAYS, ENSURING THAT ALL DEVICES ARE IN THEIR PROPER PLACE AND ARE IN WORKING ORDER.
12. ALL DEVICES SHALL BE MADE USING MATERIALS LISTED ON THE TxDOT APPROVED PRODUCTS LIST.

| CITY OF AUSTIN<br>DEPARTMENT OF PUBLIC WORKS | GENERAL TRAFFIC CONTROL NOTES | |
|---|---|---|
| 1/4/10<br>ADOPTED | THE ARCHITECT/ENGINEER ASSUMES RESPONSIBILITY FOR APPROPRIATE USE OF THIS STANDARD. | STANDARD NO.<br>804S-5<br>12 OF 13 |

13. ALL PERSONS WORKING WITHIN THE RIGHT-OF-WAY SHALL WEAR A BRIGHTLY COLORED SAFETY VEST. FOR NIGHTTIME WORK THE VEST SHALL BE RETROREFLECTIVE,
14. WHEN AN INTERSECTION IS CLOSED FOR CONSTRUCTION, THE CONTRACTOR SHALL PROCEED WITH CONSTRUCTION IN SUCH A MANNER THAT THE CLOSURE TIME IS MINIMIZED.
15. THE CONTRACTOR SHALL NOTIFY THE CAPITAL METRO DISPATCHER AT 385-4295 ONE (1) WEEK PRIOR TO LANE CLOSURES ADJACENT TO BUS STOPS.

DURATION OF WORK

WORK DURATION IS A MAJOR FACTOR IN DETERMINING THE NUMBER AND TYPES OF DEVICES USED IN TEMPORARY TRAFFIC ZONES. THE FIVE (5) CATEGORIES OF WORK DURATION AND THEIR TIME AT A LOCATION ARE AS FOLLOWS:

- LONG-TERM STATIONARY-WORK THAT OCCUPIES A LOCATION FOR MORE THAN 3 DAYS.
- INTERMEDIATE-TERM STATIONARY-WORK THAT OCCUPIES A LOCATION FROM OVERNIGHT TO 3 DAYS.
- SHORT-TERM STATIONARY-DAYTIME WORK THAT OCCUPIES A LOCATION FROM 1 TO 12 HOURS.
- SHORT-DURATION WORK THAT OCCUPIES A LOCATION UP TO 1 HOUR.
- MOBILE-WORK THAT MOVES INTERMITTENTLY OR CONTINUOUSLY.

Typical Transition Lengths and Suggested Maximum Spacing of Devices

| | | Minimum Desirable Taper Lengths (L) Meters (Feet) | | | Suggested Max. Device Spacing | | Suggested Sign Spacing Meters (Feet) |
|---|---|---|---|---|---|---|---|
| Posted Speed KPH (MPH) | Formula | 3.0(10) Offset Meters (feet) | 3.3(11) Offset Meters (feet) | 3.6(12) Offset Meters (feet) | On a taper Meters (feet) | On a tangent Meters (feet) | "X" Dimension |
| 50 (30) | $L=\frac{WS^2}{60}$ | 45 (150) | 50 (165) | 55 (180) | 9 (30) | 15-20 (60-75) | 40 (120) |
| 55 (35) | | 65 (205) | 70 (225) | 75 (245) | 10 (35) | 25-25 (70-90) | 50 (160) |
| 65 (40) | | 80 (265) | 90 (295) | 100 (320) | 12 (40) | 25-30 (80-100) | 75 (240) |
| 70 (45) | L=WS | 135 (450) | (495) | 165 (540) | 13 (45) | 25-30 (90-110) | 100 (320) |
| 80 (50) | | 150 (500) | 165 (550) | 180 (600) | 15 (50) | 30-35 (100-125) | 120 (400) |
| 90 (55) | | 165 (550) | 185 (605) | 200 (660) | 16 (55) | 35-40 (110-140) | 150 (500) |
| 100 (60) | | 180 (600) | 200 (660) | 220 (720) | 18 (60) | 40-45 (120-150) | 180 (600) |
| 105 (65) | | 195 (650) | 215 (715) | 235 (780) | 19 (65) | 40-50 (130-165) | 210 (700) |
| 115 (70) | | 215 (700) | 235 (770) | 255 (840) | 21 (70) | 45-55 (140-175) | 240 (800) |

| CITY OF AUSTIN<br>DEPARTMENT OF PUBLIC WORKS | GENERAL TRAFFIC CONTROL NOTES | |
|---|---|---|
| 1/4/10<br>ADOPTED | THE ARCHITECT/ENGINEER ASSUMES RESPONSIBILITY FOR APPROPRIATE USE OF THIS STANDARD. | STANDARD NO.<br>804S-5<br>13 OF 13 |

| NO | DATE | ISSUES AND REVISIONS |
|---|---|---|

Kimley»Horn F-928
10814 JOLLYVILLE ROAD
BLDG. 4, STE 200
AUSTIN, TX 78759
PHONE: 512-418-1771

STANDARD DETAILS
TCP
SHEET 6 OF 6
ANDERSON MILL ROAD PHASE 2

CEDAR PARK



FILENAME: AMR*TCP*STD*06.dgn
PLOTTED: 8/5/2022 3:26:54 PM

℄ AMR

Beginning chain AMR description
Feature: Road_Centerline

```
==========================================================================

Point AMR1              N   10,149,671.128 E    3,078,534.447 Sta      56+35.26

Course from AMR1 to PC AMR_3 N 30° 29′ 53.33" W Dist 147.290

                                   Curve Data
                                  *----------*
Curve AMR_3
P.I.  Station              61+42.97  N      10,150,108.600  E       3,078,276.775
Delta        =       19° 36′ 54.68"  (LT)
Degree       =        2° 44′ 52.80"
Tangent      =              360.427
Length       =              713.799
Radius       =            2,085.000
External     =               30.924
Long Chord   =              710.318
Mid. Ord.    =               30.472
P.C.  Station              57+82.55  N      10,149,798.040  E       3,078,459.695
P.T.  Station              64+96.35  N      10,150,339.732  E       3,078,000.214
C.C.                                 N      10,148,739.881  E       3,076,663.164
Back         = N  30° 29′ 53.33" W
Ahead        = N  50° 06′ 48.00" W
Chord Bear   = N  40° 18′ 20.66" W

Course from PT AMR_3 to PC AMR_6 N 50° 06′ 48.00" W Dist 162.351

                                   Curve Data
                                  *----------*
Curve AMR_6
P.I.  Station              67+50.39  N      10,150,502.643  E       3,077,805.283
Delta        =       12° 41′ 02.46"  (LT)
Degree       =        6° 56′ 41.79"
Tangent      =               91.693
Length       =              182.637
Radius       =              825.000
External     =                5.080
Long Chord   =              182.264
Mid. Ord.    =                5.049
P.C.  Station              66+58.70  N      10,150,443.843  E       3,077,875.640
P.T.  Station              68+41.33  N      10,150,544.560  E       3,077,723.731
C.C.                                 N      10,149,810.808  E       3,077,346.591
Back         = N  50° 06′ 48.00" W
Ahead        = N  62° 47′ 50.46" W
Chord Bear   = N  56° 27′ 19.23" W

Course from PT AMR_6 to PC AMR_9 N 62° 47′ 50.46" W Dist 1,591.125

                                   Curve Data
                                  *----------*
Curve AMR_9
P.I.  Station              88+76.48  N      10,151,474.904  E       3,075,913.683
Delta        =       46° 39′ 38.58"  (RT)
Degree       =        5° 33′ 55.44"
Tangent      =              444.020
Length       =              838.407
Radius       =            1,029.500
External     =               91.671
Long Chord   =              815.430
Mid. Ord.    =               84.175
P.C.  Station              84+32.46  N      10,151,271.925  E       3,076,308.592
P.T.  Station              92+70.87  N      10,151,901.430  E       3,075,790.277
C.C.                                 N      10,152,187.557  E       3,076,779.217
Back         = N  62° 47′ 50.46" W
Ahead        = N  16° 08′ 11.88" W
Chord Bear   = N  39° 28′ 01.17" W

Course from PT AMR_9 to PC AMR_12 N 16° 08′ 11.70" W Dist 0.216

                                   Curve Data
                                  *----------*
Curve AMR_12
P.I.  Station              97+10.51  N      10,152,323.749  E       3,075,668.088
Delta        =       44° 03′ 32.91"  (RT)
Degree       =        5° 16′ 33.08"
Tangent      =              439.425
Length       =              835.109
Radius       =            1,086.000
External     =               85.533
Long Chord   =              814.685
Mid. Ord.    =               79.288
P.C.  Station              92+71.08  N      10,151,901.637  E       3,075,790.217
P.T.  Station             101+06.19  N      10,152,712.016  E       3,075,873.861
C.C.                                 N      10,152,203.468  E       3,076,833.431
Back         = N  16° 08′ 11.88" W
Ahead        = N  27° 55′ 21.03" E
Chord Bear   = N   5° 53′ 34.58" E

Course from PT AMR_12 to PC AMR_15 N 27° 55′ 21.03" E Dist 174.107

                                   Curve Data
                                  *----------*
Curve AMR_15
P.I.  Station             103+48.12  N      10,152,925.783  E       3,075,987.152
Delta        =        7° 45′ 36.86"  (RT)
Degree       =        5° 43′ 46.48"
Tangent      =               67.825
Length       =              135.442
Radius       =            1,000.000
External     =                2.297
Long Chord   =              135.338
Mid. Ord.    =                2.292
P.C.  Station             102+80.30  N      10,152,865.854  E       3,075,955.391
P.T.  Station             104+15.74  N      10,152,980.874  E       3,076,026.714
C.C.                                 N      10,152,397.577  E       3,076,838.973
Back         = N  27° 55′ 21.03" E
Ahead        = N  35° 40′ 57.89" E
Chord Bear   = N  31° 48′ 09.46" E

Course from PT AMR_15 to PC AMR_18 N 35° 40′ 57.89" E Dist 66.018

                                   Curve Data
                                  *----------*
Curve AMR_18
P.I.  Station             105+49.43  N      10,153,089.468  E       3,076,104.697
Delta        =        7° 44′ 35.75"  (LT)
Degree       =        5° 43′ 46.48"
Tangent      =               67.676
Length       =              135.145
Radius       =            1,000.000
External     =                2.287
Long Chord   =              135.043
Mid. Ord.    =                2.282
P.C.  Station             104+81.76  N      10,153,034.498  E       3,076,065.222
P.T.  Station             106+16.90  N      10,153,149.256  E       3,076,136.406
C.C.                                 N      10,153,617.795  E       3,075,252.963
Back         = N  35° 40′ 57.89" E
Ahead        = N  27° 56′ 22.14" E
Chord Bear   = N  31° 48′ 40.02" E

Course from PT AMR_18 to PC AMR_21 N 27° 56′ 22.14" E Dist 752.906
```

℄ AMR (CONTINUED)

```
                                   Curve Data
                                  *----------*
Curve AMR_21
P.I.  Station             115+21.75  N      10,153,948.637  E       3,076,560.362
Delta        =        3° 28′ 52.16"  (RT)
Degree       =        1° 08′ 45.30"
Tangent      =              151.941
Length       =              303.788
Radius       =            5,000.000
External     =                2.308
Long Chord   =              303.741
Mid. Ord.    =                2.307
P.C.  Station             113+69.81  N      10,153,814.406  E       3,076,489.172
P.T.  Station             116+73.60  N      10,154,078.297  E       3,076,639.571
C.C.                                 N      10,151,471.712  E       3,080,906.386
Back         = N  27° 56′ 22.14" E
Ahead        = N  31° 25′ 14.30" E
Chord Bear   = N  29° 40′ 48.22" E

Course from PT AMR_21 to PC AMR_24 N 31° 25′ 14.30" E Dist 96.540

                                   Curve Data
                                  *----------*
Curve AMR_24
P.I.  Station             120+35.20  N      10,154,386.877  E       3,076,828.081
Delta        =       52° 17′ 20.52"  (LT)
Degree       =       10° 36′ 37.19"
Tangent      =              265.064
Length       =              492.813
Radius       =              540.000
External     =               61.547
Long Chord   =              475.888
Mid. Ord.    =               55.250
P.C.  Station             117+70.14  N      10,154,160.681  E       3,076,689.899
P.T.  Station             122+62.95  N      10,154,634.552  E       3,076,733.660
C.C.                                 N      10,154,442.192  E       3,076,229.083
Back         = N  31° 25′ 14.30" E
Ahead        = N  20° 52′ 06.22" W
Chord Bear   = N   5° 16′ 34.04" E

Course from PT AMR_24 to PC AMR_27 N 20° 52′ 06.22" W Dist 1,037.394

                                   Curve Data
                                  *----------*
Curve AMR_27
P.I.  Station             135+93.22  N      10,155,877.554  E       3,076,259.789
Delta        =       42° 02′ 52.82"  (RT)
Degree       =        7° 31′ 08.87"
Tangent      =              292.871
Length       =              559.214
Radius       =              762.000
External     =               54.344
Long Chord   =              546.749
Mid. Ord.    =               50.726
P.C.  Station             133+00.35  N      10,155,603.895  E       3,076,364.116
P.T.  Station             138+59.56  N      10,156,150.642  E       3,076,365.601
C.C.                                 N      10,155,875.337  E       3,077,076.130
Back         = N  20° 52′ 06.22" W
Ahead        = N  21° 10′ 46.60" E
Chord Bear   = N   0° 09′ 20.19" E

Course from PT AMR_27 to PC AMR_30 N 21° 10′ 46.60" E Dist 1,136.564

                                   Curve Data
                                  *----------*
Curve AMR_30
P.I.  Station             151+66.81  N      10,157,369.589  E       3,076,837.901
Delta        =       24° 48′ 35.44"  (LT)
Degree       =        7° 23′ 00.52"
Tangent      =              170.685
Length       =              336.018
Radius       =              776.000
External     =               18.550
Long Chord   =              333.399
Mid. Ord.    =               18.117
P.C.  Station             149+96.12  N      10,157,210.434  E       3,076,776.234
P.T.  Station             153+32.14  N      10,157,539.931  E       3,076,827.093
C.C.                                 N      10,157,490.797  E       3,076,052.650
Back         = N  21° 10′ 46.60" E
Ahead        = N   3° 37′ 48.84" W
Chord Bear   = N   8° 46′ 28.88" E

Course from PT AMR_30 to PC AMR_33 N 3° 37′ 48.84" W Dist 705.208

                                   Curve Data
                                  *----------*
Curve AMR_33
P.I.  Station             161+35.21  N      10,158,341.391  E       3,076,776.245
Delta        =       11° 10′ 43.24"  (LT)
Degree       =        5° 43′ 46.48"
Tangent      =               97.863
Length       =              195.105
Radius       =            1,000.000
External     =                4.777
Long Chord   =              194.795
Mid. Ord.    =                4.754
P.C.  Station             160+37.35  N      10,158,243.724  E       3,076,782.442
P.T.  Station             162+32.46  N      10,158,436.003  E       3,076,751.232
C.C.                                 N      10,158,180.407  E       3,075,784.448
Back         = N   3° 37′ 48.84" W
Ahead        = N  14° 48′ 32.08" W
Chord Bear   = N   9° 13′ 10.46" W

Course from PT AMR_33 to AMR35 N 14° 48′ 32.08" W Dist 1,580.177

Point AMR35             N   10,159,963.693 E    3,076,347.345 Sta     178+12.63

==========================================================================
Ending chain AMR description
```

| NO | DATE | ISSUES AND REVISIONS |
|---|---|---|

8/5/2022


Kimley»Horn F-928
10814 JOLLYVILLE ROAD
BLDG. 4, STE 200
AUSTIN, TX 78759
PHONE: 512-418-1771


# HORIZONTAL ALIGNMENT DATA

SHEET 1 OF 1

ANDERSON MILL ROAD PHASE 2

CEDAR PARK



FILENAME: AMR*HORZ*DATA.dgn
PLOTTED: 8/5/2022 3:27:10 PM

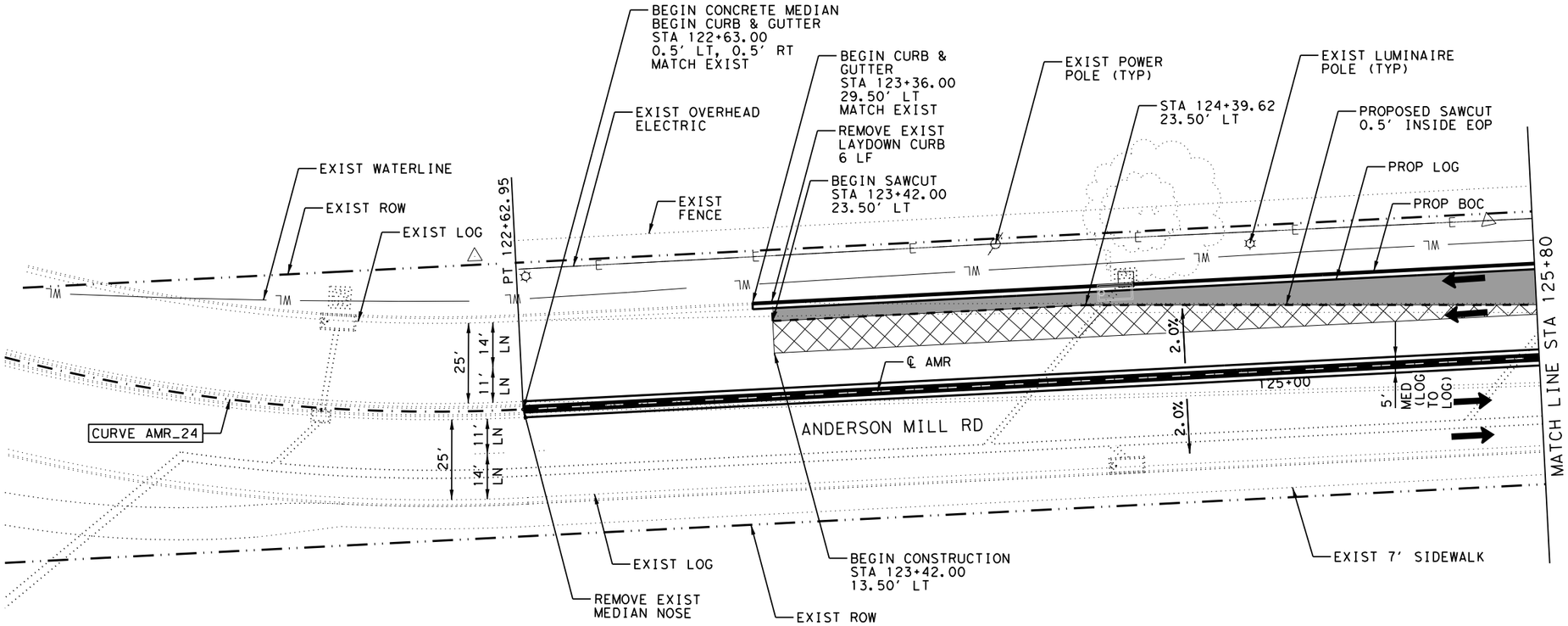


## LEGEND

- EXIST ROW
- EXIST EASEMENT
- PROP SAWCUT
- PROP ASPHALT PAVEMENT
- PROP MILL & OVERLAY
- PROP BRICK MEDIAN
- PROP CONCRETE DRIVEWAY

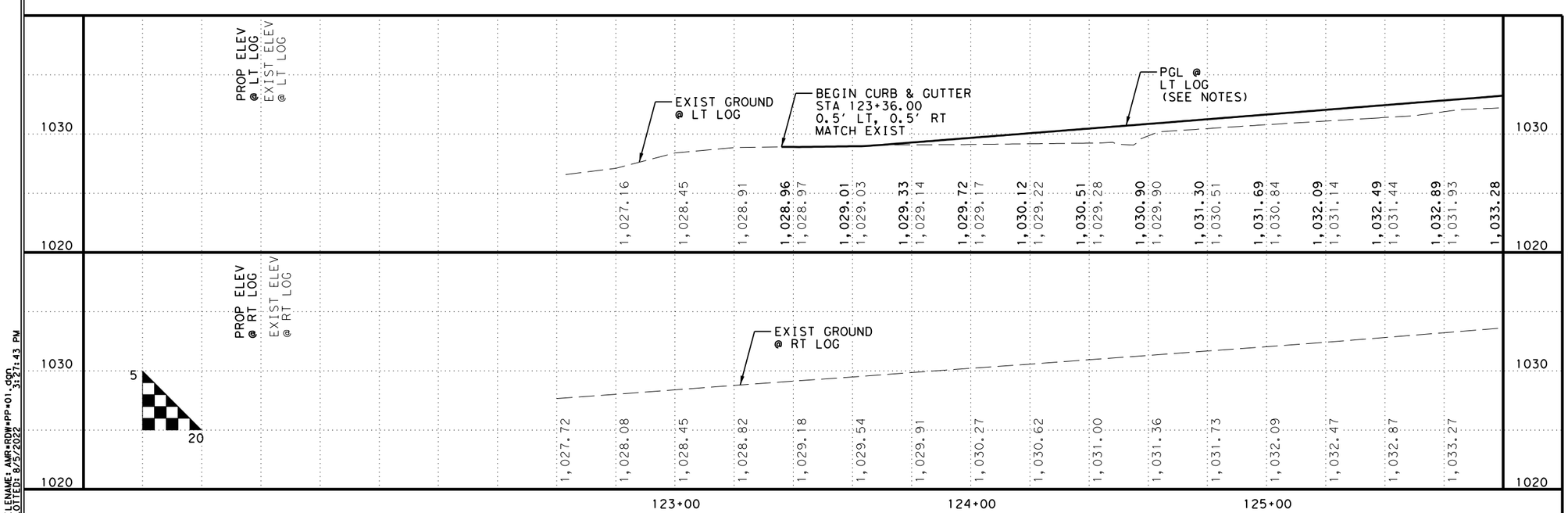


0 20 40

NOTES:

1. DIMENSIONS, STATIONS, AND OFFSETS GIVEN AT BACK OF CURB UNLESS OTHERWISE NOTED.
2. ALL UTILITIES TO BE LOCATED AND CONFIRMED BY THE CONTRACTOR IN THE FIELD PRIOR TO CONSTRUCTION.
3. PGL SHOWN IS BASED OFF MATCHING EDGE OF EXISTING ROADWAY AND WIDENING THE ROADWAY AT THE SAME CROSS-SLOPE AND/OR SUPERELEVATION OF EXISTING ROADWAY.

| NO | DATE | ISSUES AND REVISIONS |
|---|---|---|

STATE OF TEXAS
AUSTIN S. HELTON
124922
LICENSED
PROFESSIONAL ENGINEER
8/5/2022

Kimley»Horn
F-928
10814 JOLLYVILLE ROAD
BLDG. 4, STE 200
AUSTIN, TX 78759
PHONE: 512-418-1771

# ROADWAY PLAN & PROFILE

SHEET 1 OF 10
ANDERSON MILL ROAD PHASE 2

CEDAR PARK



FILENAME: AMR+RDW+PP+01.dgn
PLOTTED: 8/5/2022 3:27:43 PM

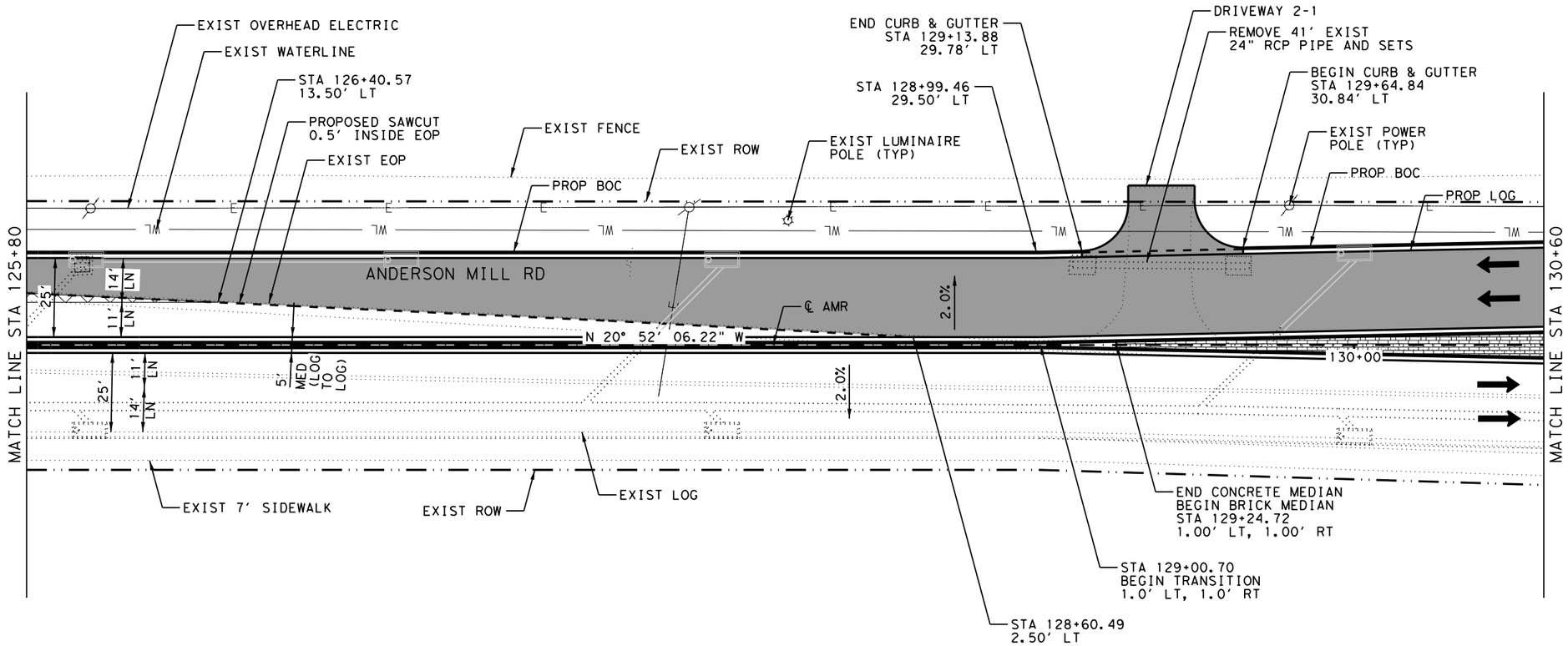


## LEGEND

- EXIST ROW
- EXIST EASEMENT
- PROP SAWCUT
- PROP ASPHALT PAVEMENT
- PROP MILL & OVERLAY
- PROP BRICK MEDIAN
- PROP CONCRETE DRIVEWAY

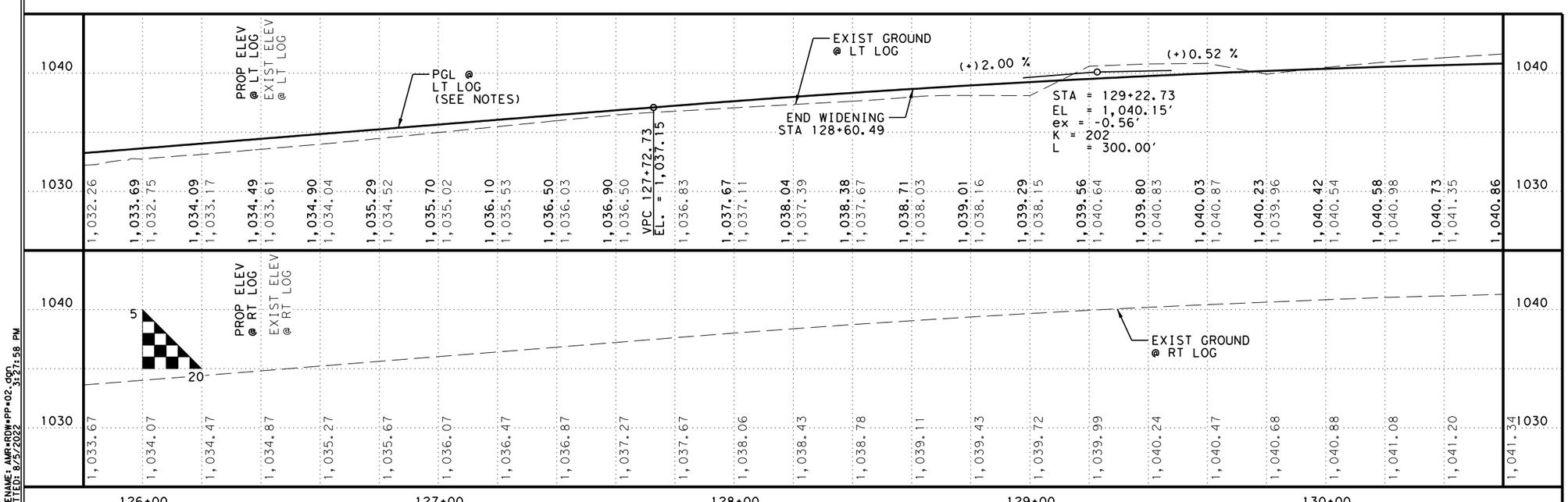


0 20 40

NOTES:

1. DIMENSIONS, STATIONS, AND OFFSETS GIVEN AT BACK OF CURB UNLESS OTHERWISE NOTED.
2. ALL UTILITIES TO BE LOCATED AND CONFIRMED BY THE CONTRACTOR IN THE FIELD PRIOR TO CONSTRUCTION.
3. PGL SHOWN IS BASED OFF MATCHING EDGE OF EXISTING ROADWAY AND WIDENING THE ROADWAY AT THE SAME CROSS-SLOPE AND/OR SUPERELEVATION OF EXISTING ROADWAY.

| NO | DATE | ISSUES AND REVISIONS |
|---|---|---|

STATE OF TEXAS
AUSTIN S. HELTON
124922
LICENSED
PROFESSIONAL ENGINEER
8/5/2022

Kimley»Horn F-928
10814 JOLLYVILLE ROAD
BLDG. 4, STE 200
AUSTIN, TX 78759
PHONE: 512-418-1771

# ROADWAY PLAN & PROFILE

SHEET 2 OF 10
ANDERSON MILL ROAD PHASE 2

CEDAR PARK



FILENAME: AMR+RDW+PP+02.dgn
PLOTTED: 8/5/2022 3:27:58 PM

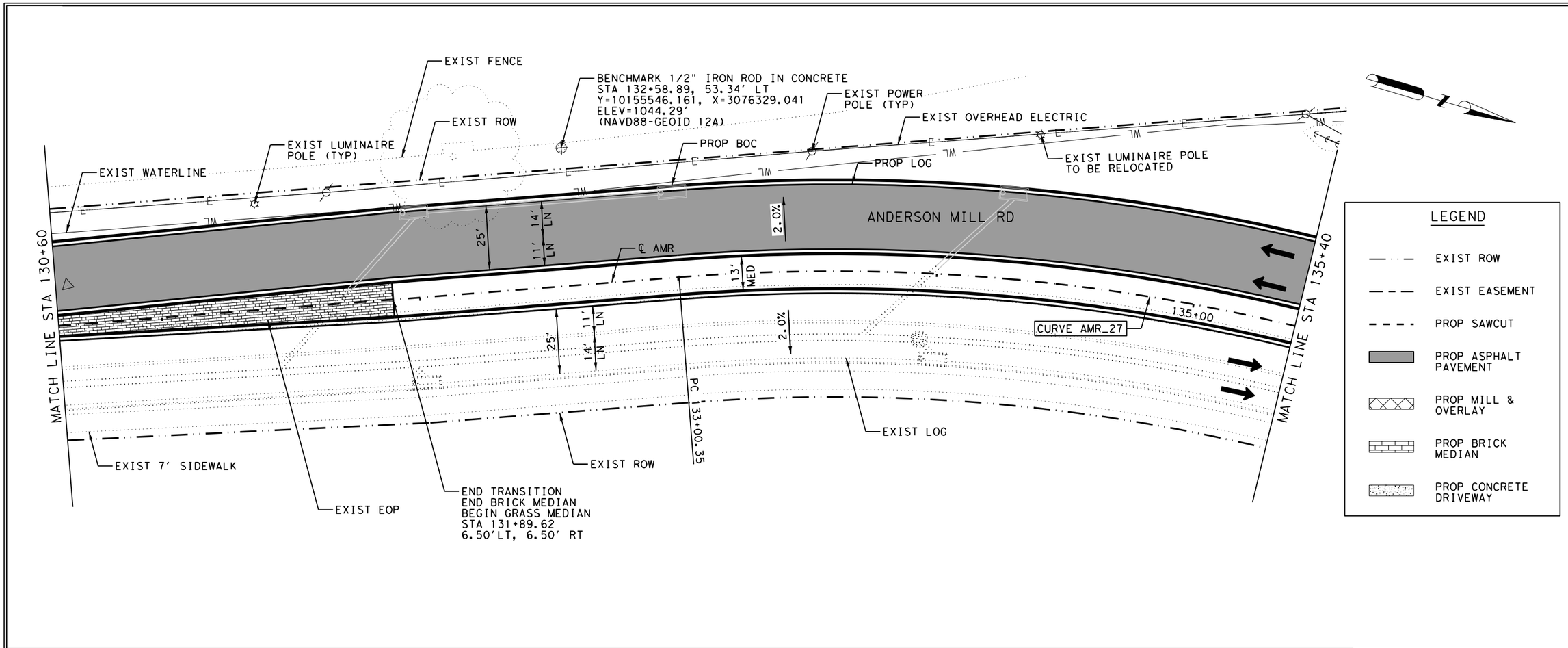


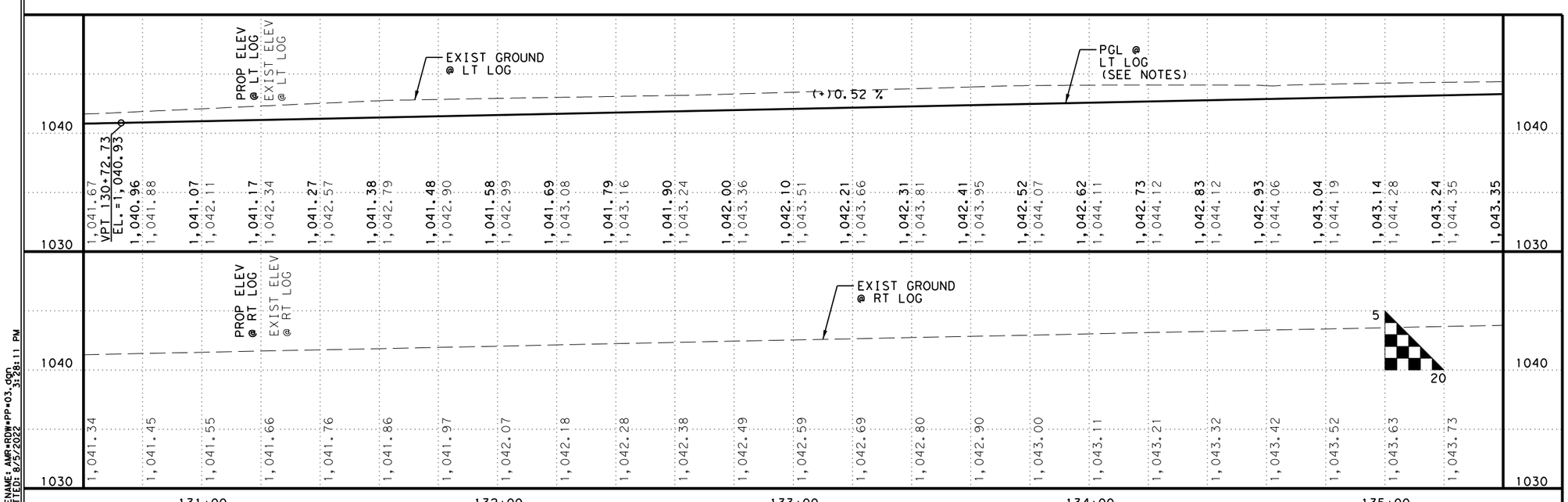


0 20 40

NOTES:

1. DIMENSIONS, STATIONS, AND OFFSETS GIVEN AT BACK OF CURB UNLESS OTHERWISE NOTED.
2. ALL UTILITIES TO BE LOCATED AND CONFIRMED BY THE CONTRACTOR IN THE FIELD PRIOR TO CONSTRUCTION.
3. PGL SHOWN IS BASED OFF MATCHING EDGE OF EXISTING ROADWAY AND WIDENING THE ROADWAY AT THE SAME CROSS-SLOPE AND/OR SUPERELEVATION OF EXISTING ROADWAY.

| NO | DATE | ISSUES AND REVISIONS |
|---|---|---|

STATE OF TEXAS
AUSTIN S. HELTON
124922
LICENSED
PROFESSIONAL ENGINEER
8/5/2022

Kimley»Horn
F-928
10814 JOLLYVILLE ROAD
BLDG. 4, STE 200
AUSTIN, TX 78759
PHONE: 512-418-1771

# ROADWAY PLAN & PROFILE

SHEET 3 OF 10
ANDERSON MILL ROAD PHASE 2

CEDAR PARK



FILENAME: AMR+RDW+PP+03.dgn
PLOTTED: 8/5/2022 3:28:11 PM

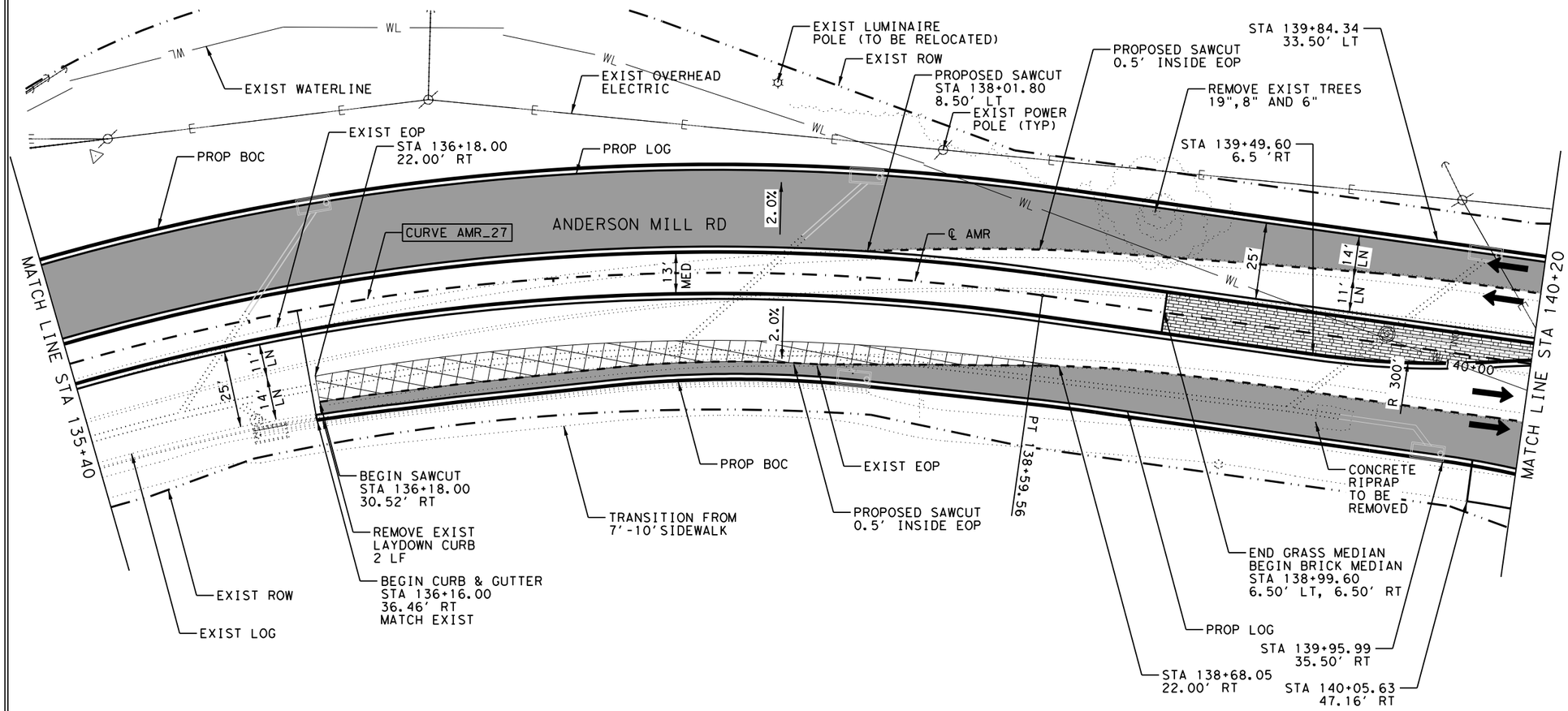


## LEGEND

- EXIST ROW
- EXIST EASEMENT
- PROP SAWCUT
- PROP ASPHALT PAVEMENT
- PROP MILL & OVERLAY
- PROP BRICK MEDIAN
- PROP CONCRETE DRIVEWAY

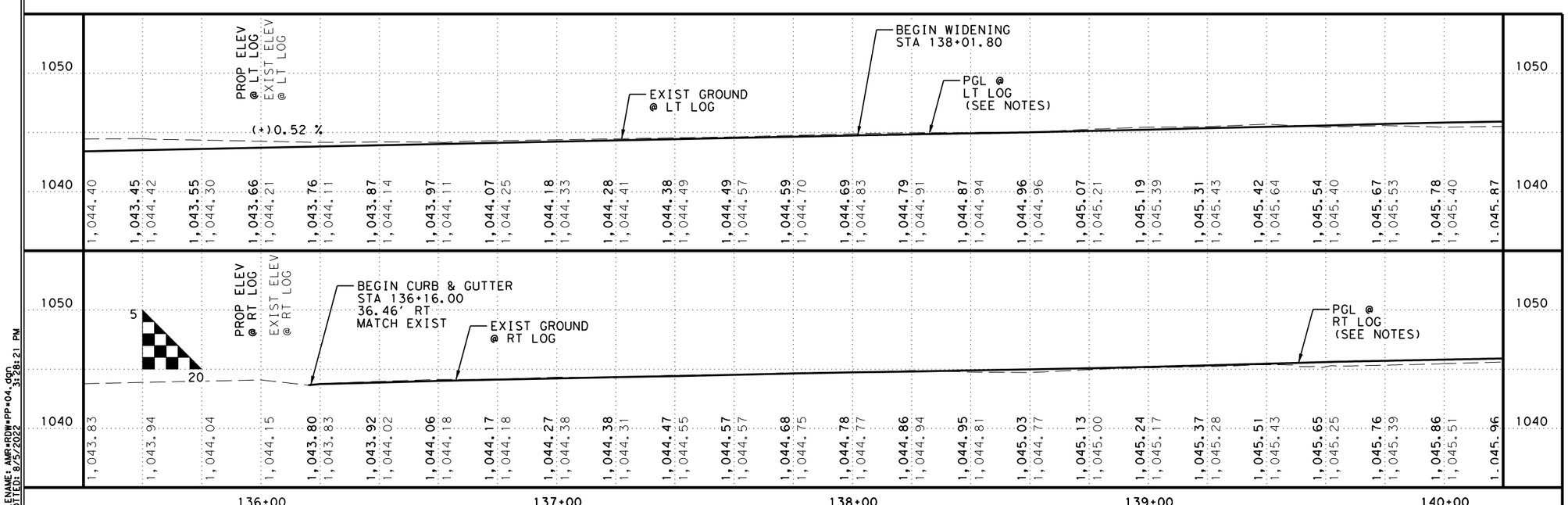


0 20 40

NOTES:

1. DIMENSIONS, STATIONS, AND OFFSETS GIVEN AT BACK OF CURB UNLESS OTHERWISE NOTED.
2. ALL UTILITIES TO BE LOCATED AND CONFIRMED BY THE CONTRACTOR IN THE FIELD PRIOR TO CONSTRUCTION.
3. PGL SHOWN IS BASED OFF MATCHING EDGE OF EXISTING ROADWAY AND WIDENING THE ROADWAY AT THE SAME CROSS-SLOPE AND/OR SUPERELEVATION OF EXISTING ROADWAY.

| NO | DATE | ISSUES AND REVISIONS |
|---|---|---|

STATE OF TEXAS
AUSTIN S. HELTON
124922
LICENSED
PROFESSIONAL ENGINEER
8/5/2022

Kimley»Horn F-928
10814 JOLLYVILLE ROAD
BLDG. 4, STE 200
AUSTIN, TX 78759
PHONE: 512-418-1771

# ROADWAY PLAN & PROFILE

SHEET 4 OF 10
ANDERSON MILL ROAD PHASE 2

CEDAR PARK



FILENAME: AMR+RDW+PP+04.dgn
PLOTTED: 8/5/2022 3:28:21 PM

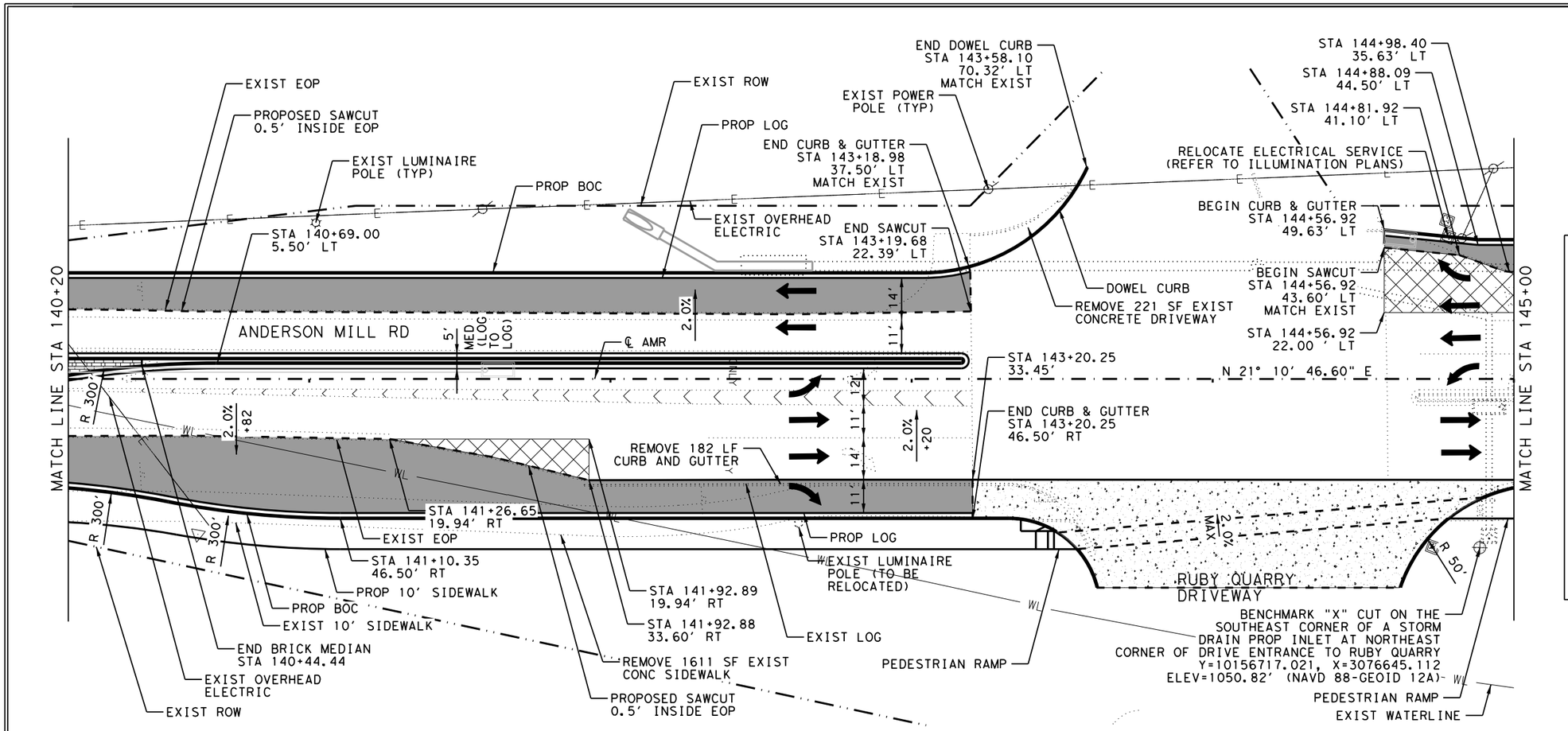


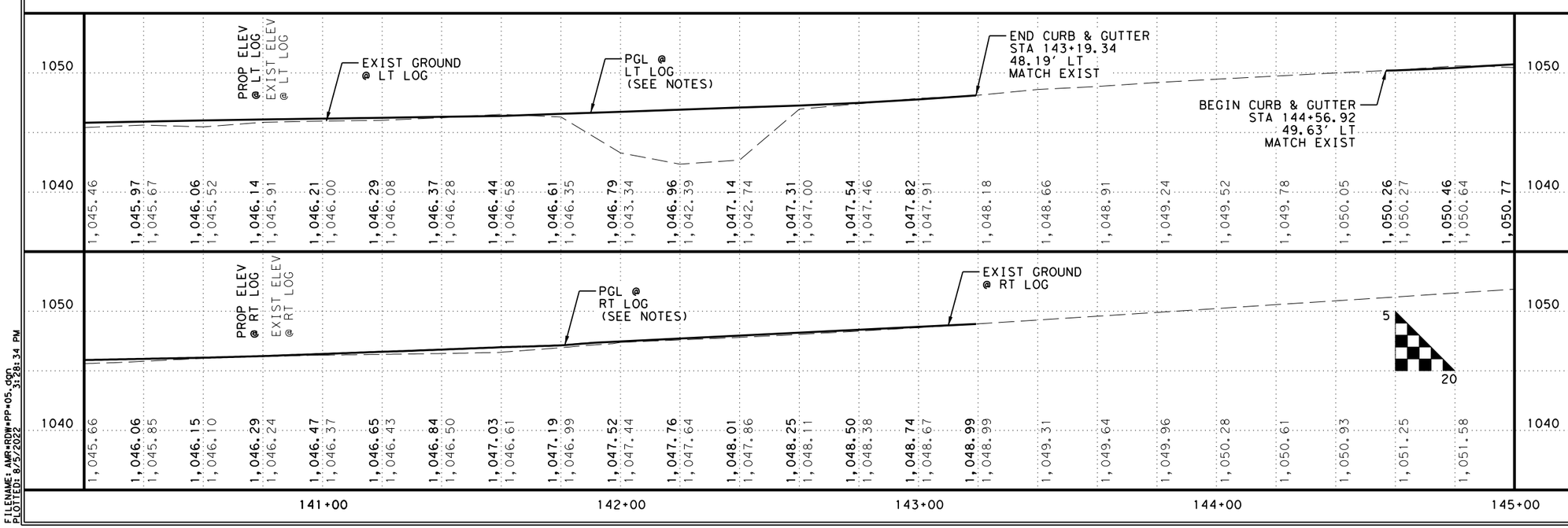

## LEGEND

- EXIST ROW
- EXIST EASEMENT
- PROP SAWCUT
- PROP ASPHALT PAVEMENT
- PROP MILL & OVERLAY
- PROP BRICK MEDIAN
- PROP CONCRETE DRIVEWAY

0 20 40

NOTES:

1. DIMENSIONS, STATIONS, AND OFFSETS GIVEN AT BACK OF CURB UNLESS OTHERWISE NOTED.
2. ALL UTILITIES TO BE LOCATED AND CONFIRMED BY THE CONTRACTOR IN THE FIELD PRIOR TO CONSTRUCTION.
3. PGL SHOWN IS BASED OFF MATCHING EDGE OF EXISTING ROADWAY AND WIDENING THE ROADWAY AT THE SAME CROSS-SLOPE AND/OR SUPERELEVATION OF EXISTING ROADWAY.

| NO | DATE | ISSUES AND REVISIONS |
|---|---|---|

STATE OF TEXAS
AUSTIN S. HELTON
124922
LICENSED
PROFESSIONAL ENGINEER
8/5/2022

Kimley»Horn F-928
10814 JOLLYVILLE ROAD
BLDG. 4, STE 200
AUSTIN, TX 78759
PHONE: 512-418-1771

# ROADWAY PLAN & PROFILE

SHEET 5 OF 10
ANDERSON MILL ROAD PHASE 2

CEDAR PARK



FILENAME: AMR+RDW+PP+05.dgn
PLOTTED: 8/5/2022 3:28:34 PM

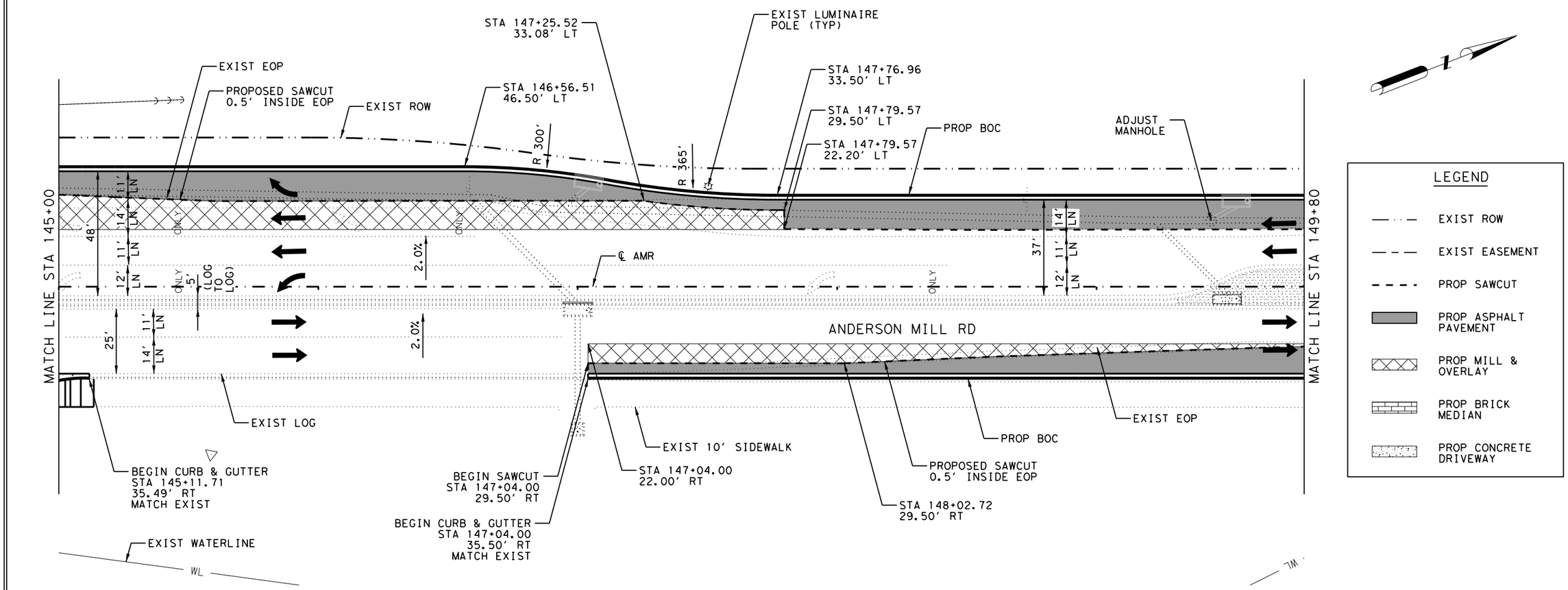




## LEGEND

- EXIST ROW
- EXIST EASEMENT
- PROP SAWCUT
- PROP ASPHALT PAVEMENT
- PROP MILL & OVERLAY
- PROP BRICK MEDIAN
- PROP CONCRETE DRIVEWAY

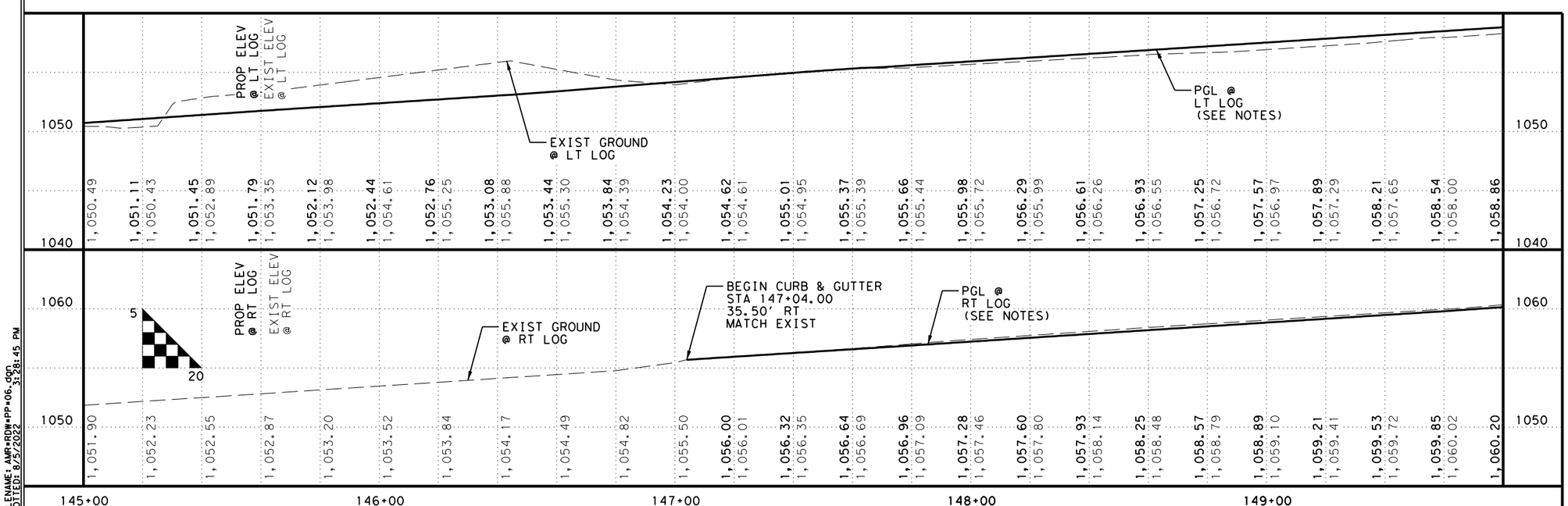


0 20 40

NOTES:

1. DIMENSIONS, STATIONS, AND OFFSETS GIVEN AT BACK OF CURB UNLESS OTHERWISE NOTED.
2. ALL UTILITIES TO BE LOCATED AND CONFIRMED BY THE CONTRACTOR IN THE FIELD PRIOR TO CONSTRUCTION.
3. PGL SHOWN IS BASED OFF MATCHING EDGE OF EXISTING ROADWAY AND WIDENING THE ROADWAY AT THE SAME CROSS-SLOPE AND/OR SUPERELEVATION OF EXISTING ROADWAY.

| NO | DATE | ISSUES AND REVISIONS |
|---|---|---|

STATE OF TEXAS
AUSTIN S. HELTON
124922
LICENSED
PROFESSIONAL ENGINEER
8/5/2022


Kimley»Horn
F-928
10814 JOLLYVILLE ROAD
BLDG. 4, STE 200
AUSTIN, TX 78759
PHONE: 512-418-1771


# ROADWAY PLAN & PROFILE

SHEET 6 OF 10
ANDERSON MILL ROAD PHASE 2

CEDAR PARK



FILENAME: AMR*RDW*PP*06.dgn
PLOTTED: 8/5/2022 3:28:45 PM

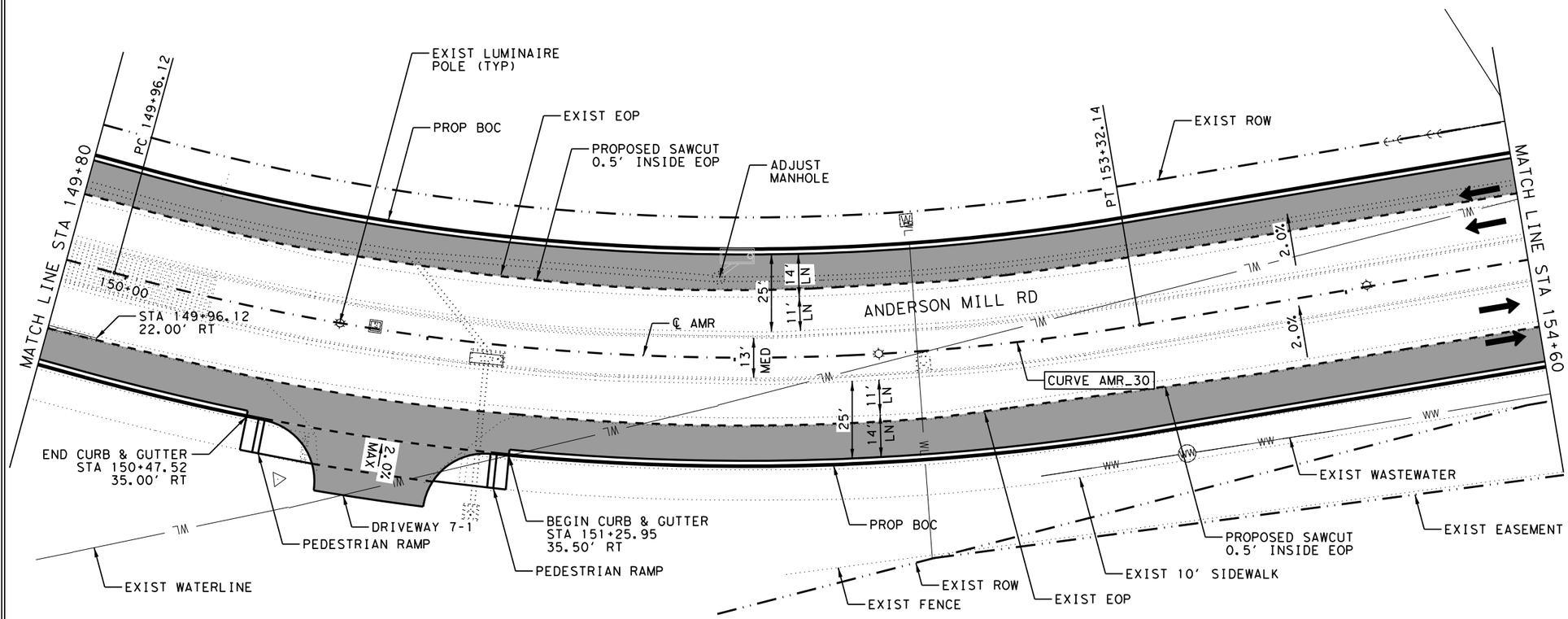


## LEGEND

- EXIST ROW
- EXIST EASEMENT
- PROP SAWCUT
- PROP ASPHALT PAVEMENT
- PROP MILL & OVERLAY
- PROP BRICK MEDIAN
- PROP CONCRETE DRIVEWAY

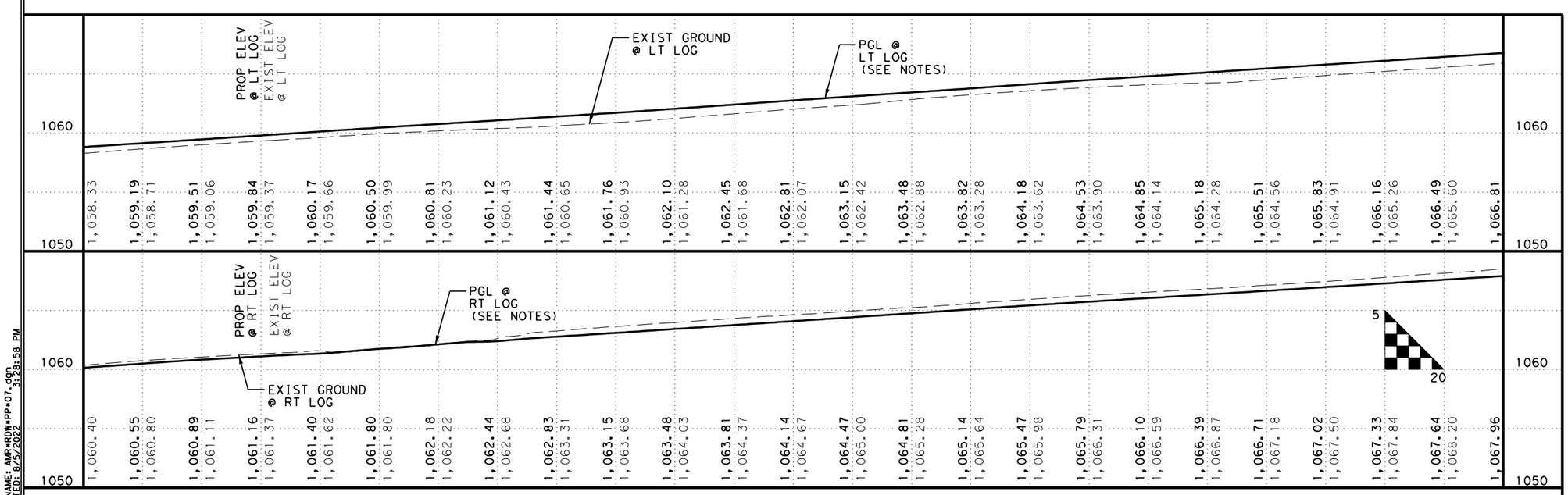


0 20 40

NOTES:

1. DIMENSIONS, STATIONS, AND OFFSETS GIVEN AT BACK OF CURB UNLESS OTHERWISE NOTED.
2. ALL UTILITIES TO BE LOCATED AND CONFIRMED BY THE CONTRACTOR IN THE FIELD PRIOR TO CONSTRUCTION.
3. PGL SHOWN IS BASED OFF MATCHING EDGE OF EXISTING ROADWAY AND WIDENING THE ROADWAY AT THE SAME CROSS-SLOPE AND/OR SUPERELEVATION OF EXISTING ROADWAY.

| NO | DATE | ISSUES AND REVISIONS |
|---|---|---|

STATE OF TEXAS
AUSTIN S. HELTON
124922
LICENSED
PROFESSIONAL ENGINEER
8/5/2022

Kimley»Horn F-928
10814 JOLLYVILLE ROAD
BLDG. 4, STE 200
AUSTIN, TX 78759
PHONE: 512-418-1771

# ROADWAY PLAN & PROFILE

SHEET 7 OF 10
ANDERSON MILL ROAD PHASE 2

CEDAR PARK



FILENAME: AMR+RDW+PP+07.dgn
PLOTTED: 8/5/2022 3:28:58 PM

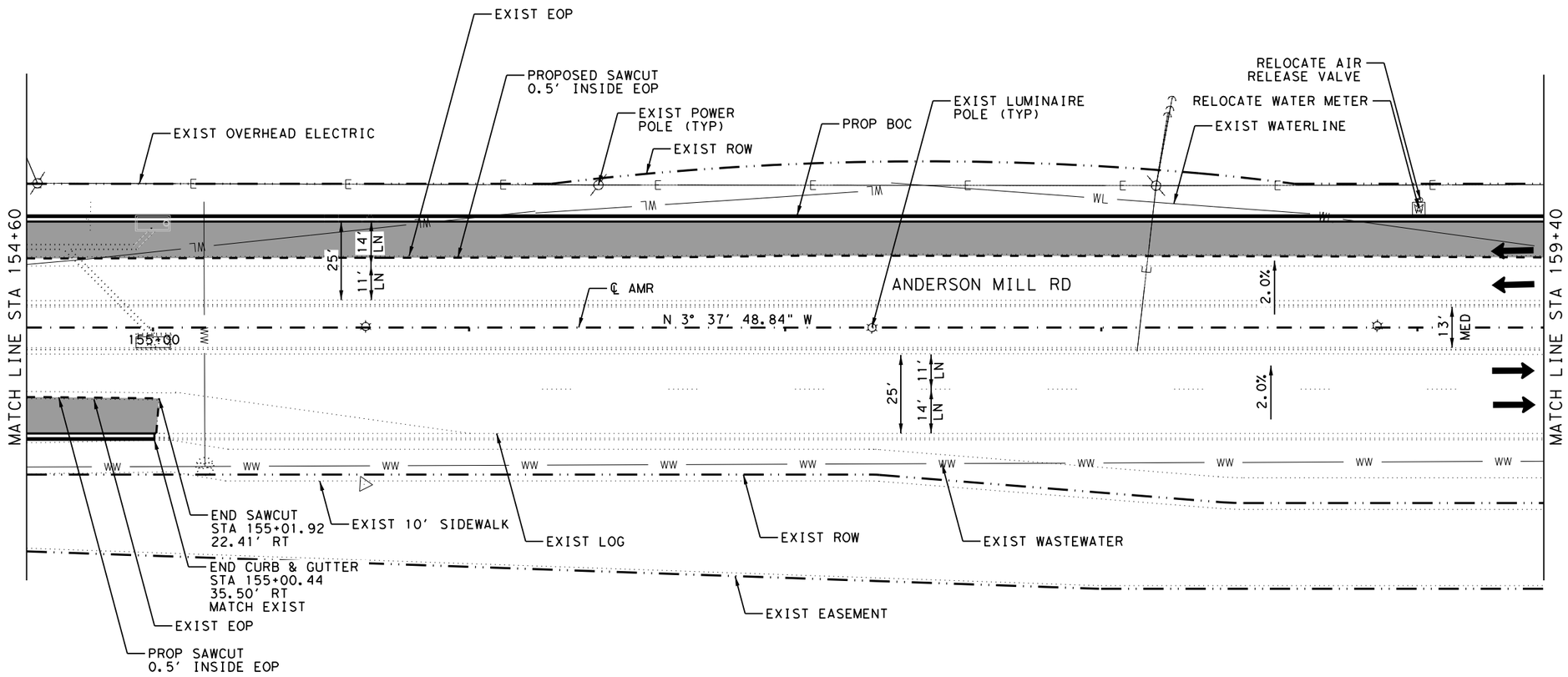


## LEGEND

- EXIST ROW
- EXIST EASEMENT
- PROP SAWCUT
- PROP ASPHALT PAVEMENT
- PROP MILL & OVERLAY
- PROP BRICK MEDIAN
- PROP CONCRETE DRIVEWAY

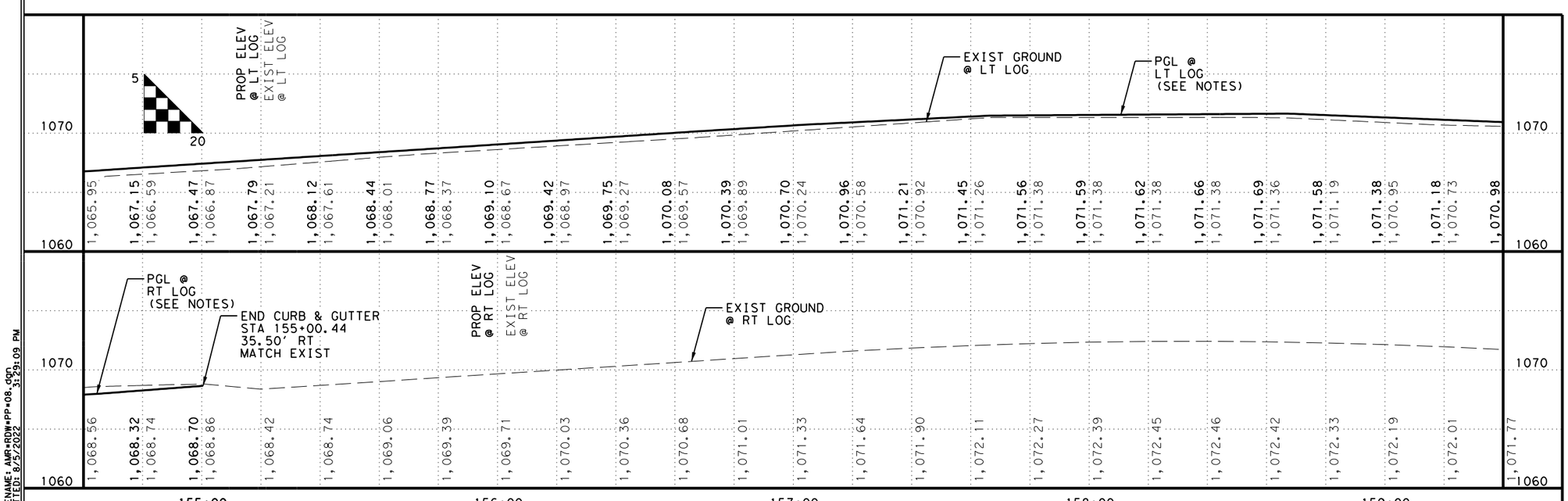


0 20 40

NOTES:

1. DIMENSIONS, STATIONS, AND OFFSETS GIVEN AT BACK OF CURB UNLESS OTHERWISE NOTED.
2. ALL UTILITIES TO BE LOCATED AND CONFIRMED BY THE CONTRACTOR IN THE FIELD PRIOR TO CONSTRUCTION.
3. PGL SHOWN IS BASED OFF MATCHING EDGE OF EXISTING ROADWAY AND WIDENING THE ROADWAY AT THE SAME CROSS-SLOPE AND/OR SUPERELEVATION OF EXISTING ROADWAY.

| NO | DATE | ISSUES AND REVISIONS |
|---|---|---|

STATE OF TEXAS
AUSTIN S. HELTON
124922
LICENSED
PROFESSIONAL ENGINEER
8/5/2022


Kimley»Horn
F-928
10814 JOLLYVILLE ROAD
BLDG. 4, STE 200
AUSTIN, TX 78759
PHONE: 512-418-1771


# ROADWAY PLAN & PROFILE

SHEET 8 OF 10
ANDERSON MILL ROAD PHASE 2

CEDAR PARK



FILENAME: AMR+RDW+PP+08.dgn
PLOTTED: 8/5/2022 3:29:09 PM

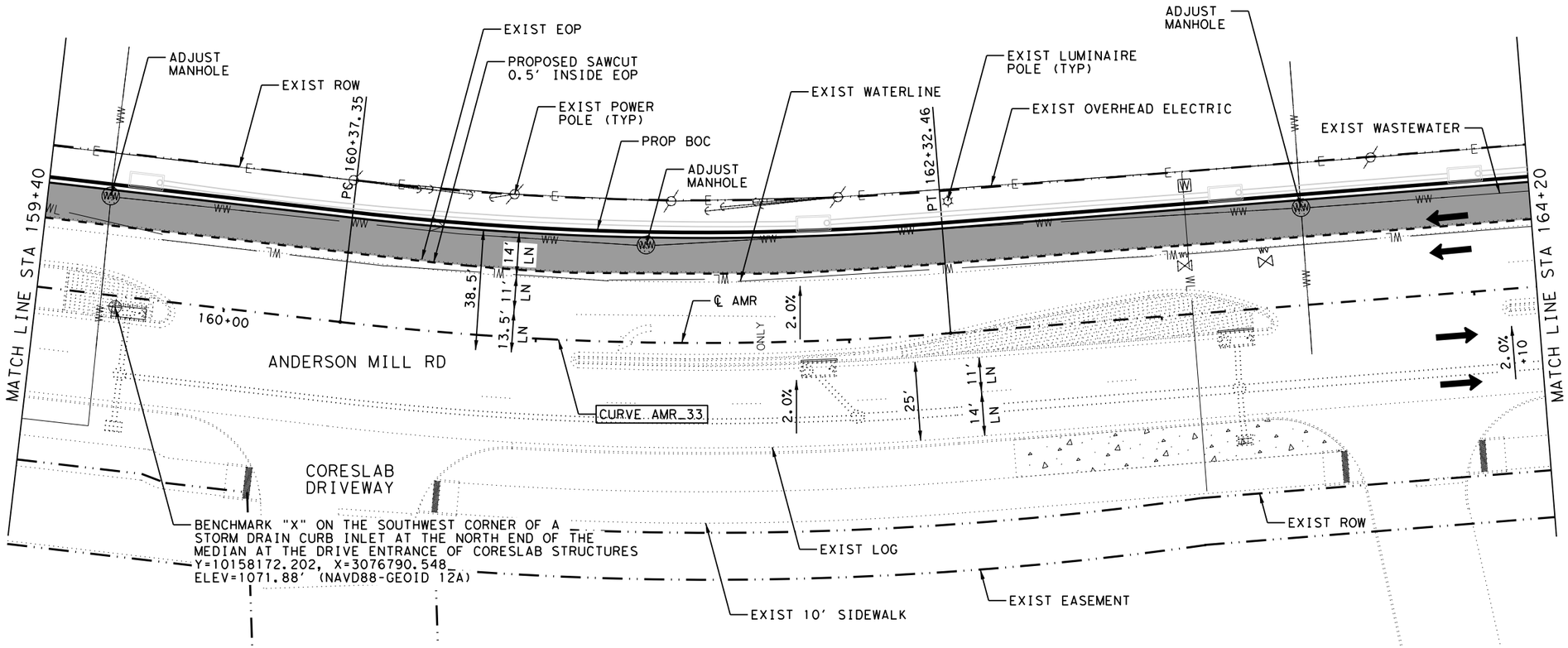

## LEGEND

- EXIST ROW
- EXIST EASEMENT
- PROP SAWCUT
- PROP ASPHALT PAVEMENT
- PROP MILL & OVERLAY
- PROP BRICK MEDIAN
- PROP CONCRETE DRIVEWAY

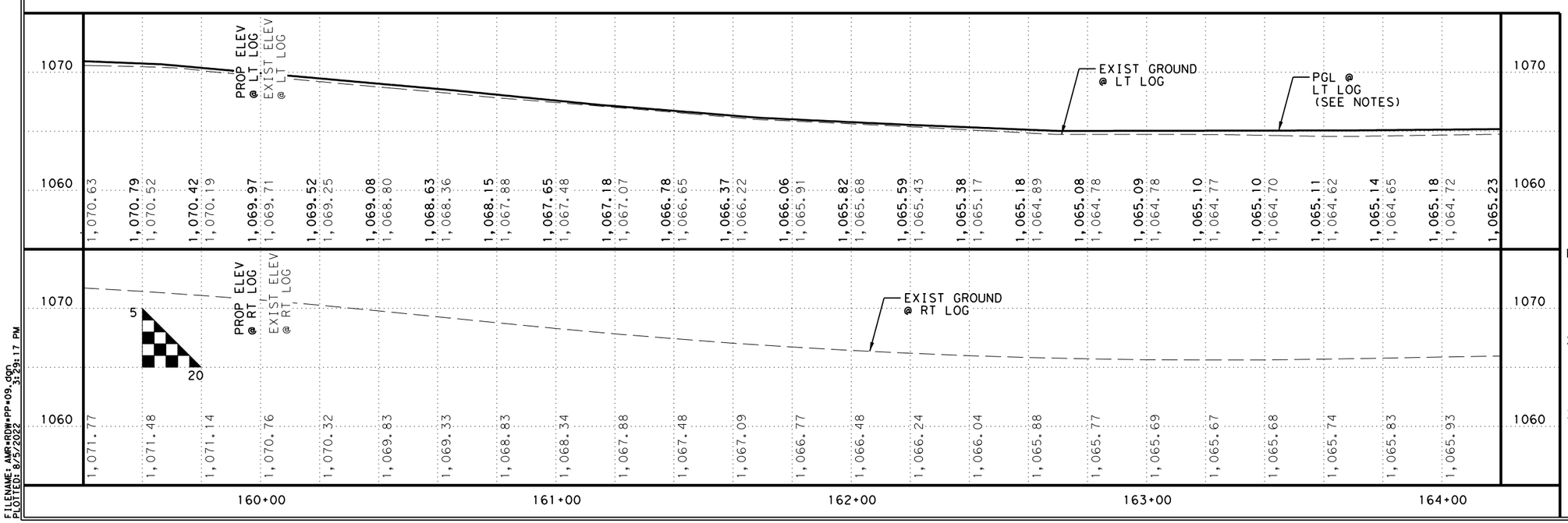


0 20 40

NOTES:

1. DIMENSIONS, STATIONS, AND OFFSETS GIVEN AT BACK OF CURB UNLESS OTHERWISE NOTED.
2. ALL UTILITIES TO BE LOCATED AND CONFIRMED BY THE CONTRACTOR IN THE FIELD PRIOR TO CONSTRUCTION.
3. PGL SHOWN IS BASED OFF MATCHING EDGE OF EXISTING ROADWAY AND WIDENING THE ROADWAY AT THE SAME CROSS-SLOPE AND/OR SUPERELEVATION OF EXISTING ROADWAY.

| NO | DATE | ISSUES AND REVISIONS |
|---|---|---|

STATE OF TEXAS
AUSTIN S. HELTON
124922
LICENSED
PROFESSIONAL ENGINEER
8/5/2022

Kimley»Horn F-928
10814 JOLLYVILLE ROAD
BLDG. 4, STE 200
AUSTIN, TX 78759
PHONE: 512-418-1771

# ROADWAY PLAN & PROFILE

SHEET 9 OF 10
ANDERSON MILL ROAD PHASE 2

CEDAR PARK



FILENAME: AMR-RDW-PP-09.dgn
PLOTTED: 8/5/2022 3:29:17 PM

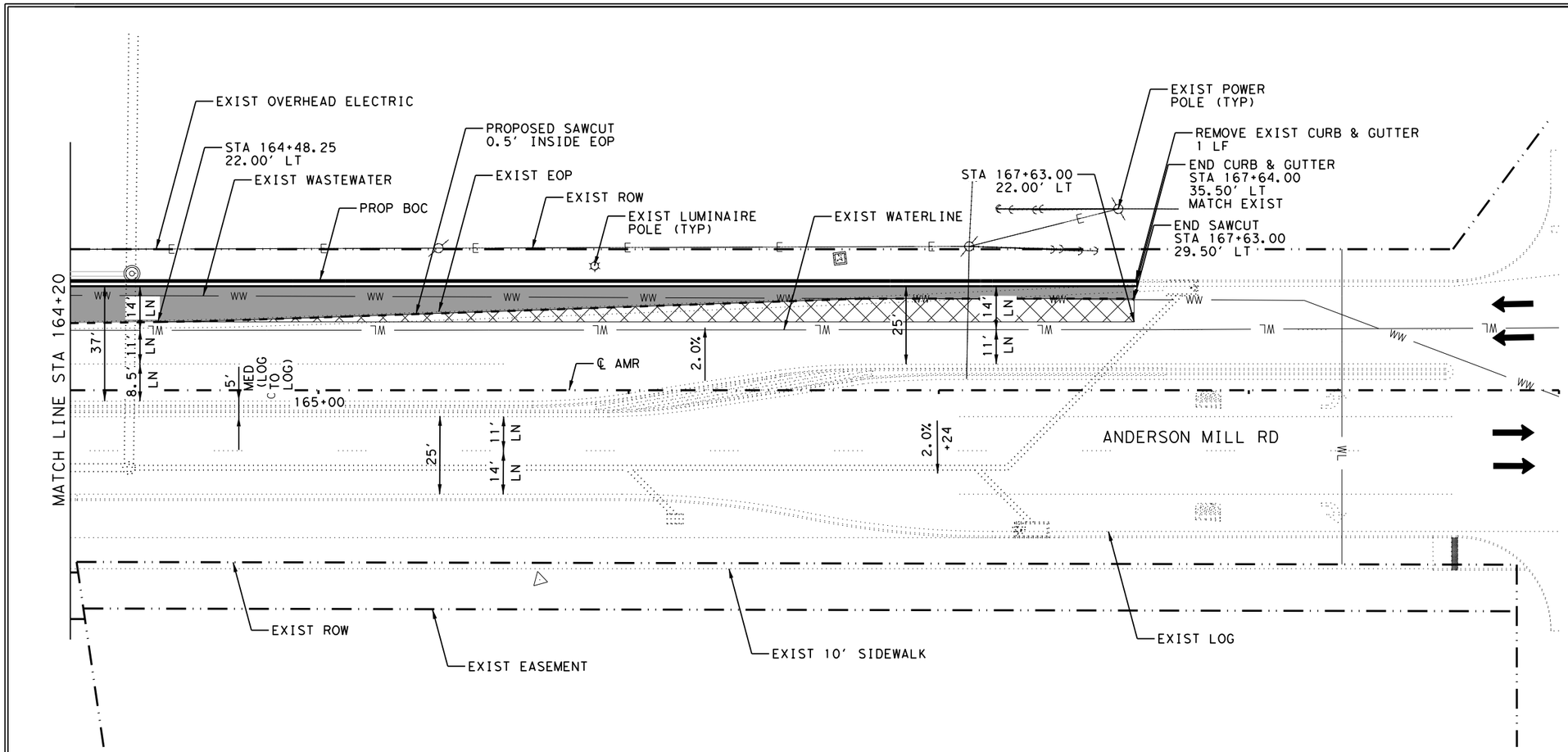


## LEGEND

- EXIST ROW
- EXIST EASEMENT
- PROP SAWCUT
- PROP ASPHALT PAVEMENT
- PROP MILL & OVERLAY
- PROP BRICK MEDIAN
- PROP CONCRETE DRIVEWAY

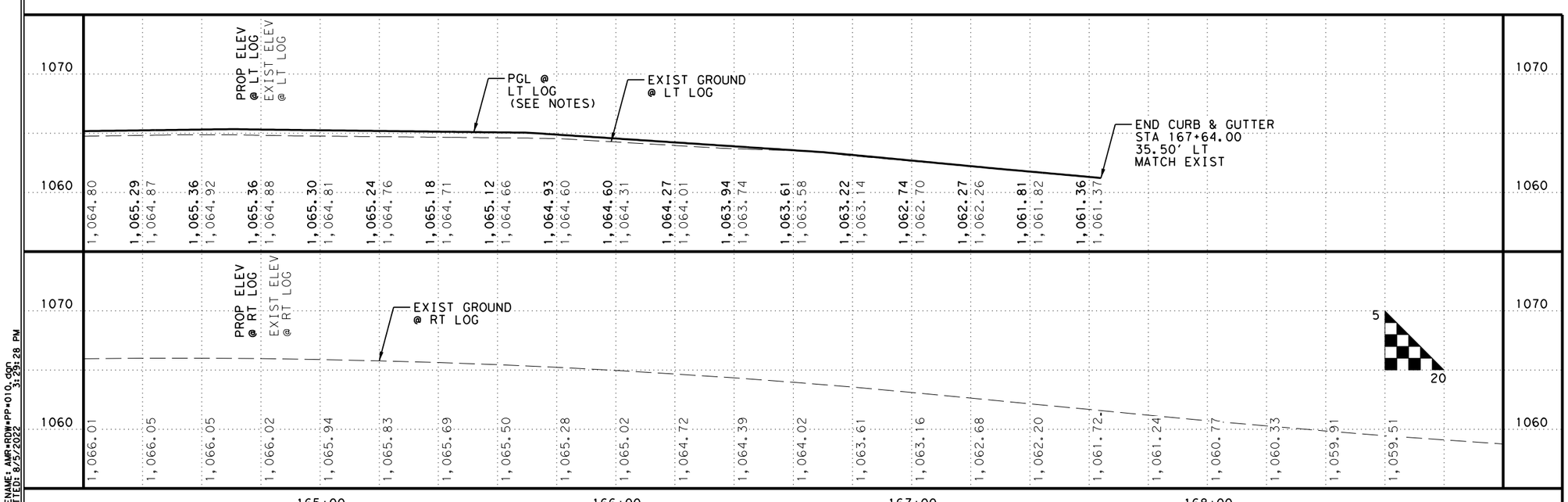


0 20 40

NOTES:

1. DIMENSIONS, STATIONS, AND OFFSETS GIVEN AT BACK OF CURB UNLESS OTHERWISE NOTED.
2. ALL UTILITIES TO BE LOCATED AND CONFIRMED BY THE CONTRACTOR IN THE FIELD PRIOR TO CONSTRUCTION.
3. PGL SHOWN IS BASED OFF MATCHING EDGE OF EXISTING ROADWAY AND WIDENING THE ROADWAY AT THE SAME CROSS-SLOPE AND/OR SUPERELEVATION OF EXISTING ROADWAY.

| NO | DATE | ISSUES AND REVISIONS |
|---|---|---|

STATE OF TEXAS
AUSTIN S. HELTON
124922
LICENSED
PROFESSIONAL ENGINEER
8/5/2022

Kimley»Horn
F-928
10814 JOLLYVILLE ROAD
BLDG. 4, STE 200
AUSTIN, TX 78759
PHONE: 512-418-1771

# ROADWAY PLAN & PROFILE

SHEET 10 OF 10
ANDERSON MILL ROAD PHASE 2

CEDAR PARK



FILENAME: AMR*RDW*PP*010.dgn
PLOTTED: 8/5/2022 3:29:28 PM

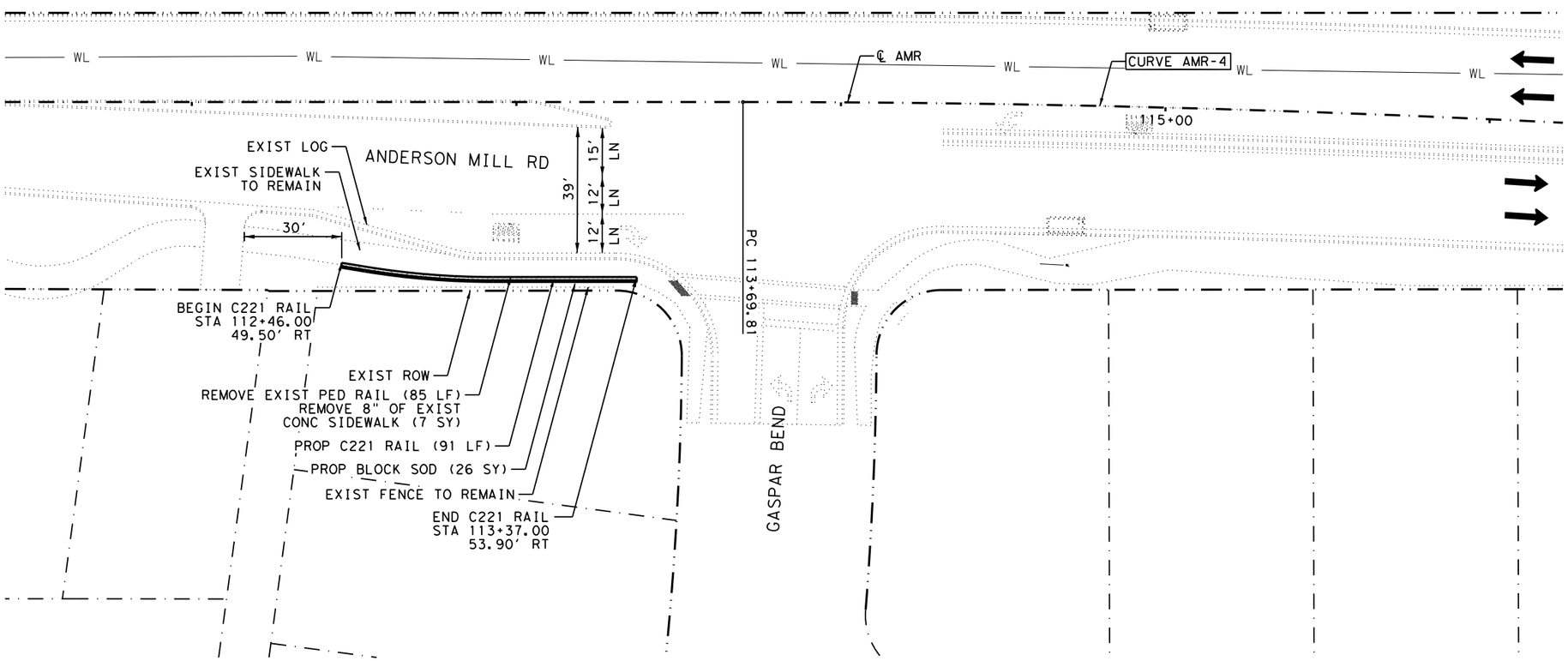

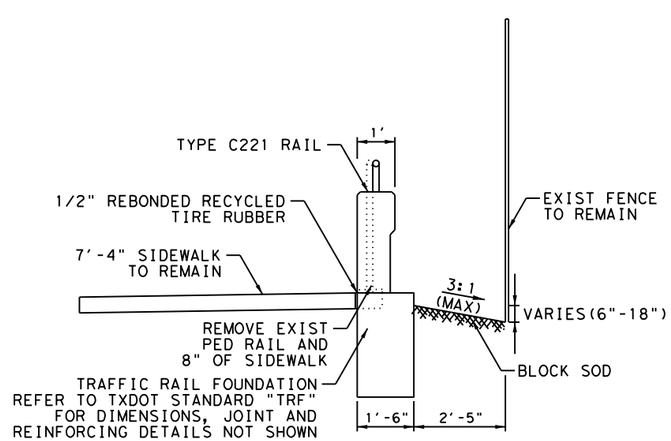


**SIDEWALK DETAIL**

| NO | DATE | ISSUES AND REVISIONS |
|---|---|---|
| | | |

STATE OF TEXAS
AUSTIN S. HELTON
124922
LICENSED
PROFESSIONAL ENGINEER

8/5/2022

Kimley»Horn
F-928
10814 JOLLYVILLE ROAD
BLDG. 4, STE 200
AUSTIN, TX 78759
PHONE: 512-418-1771

# RAIL LAYOUT

SHEET 1 OF 1
ANDERSON MILL ROAD PHASE 2

CEDAR PARK



FILENAME: AMR-RDW-PP-GASPAR.dgn
PLOTTED: 8/5/2022 3:30:33 PM

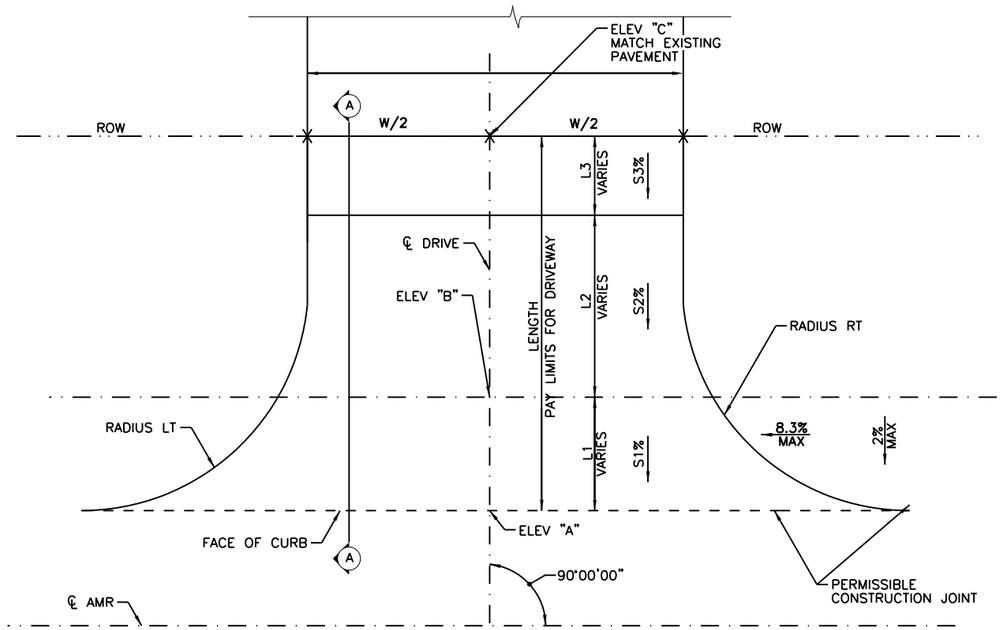


CONCRETE DRIVEWAY PLAN

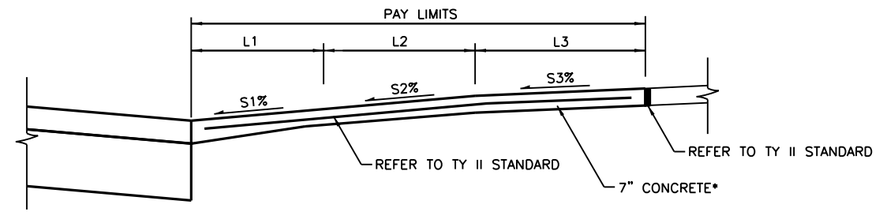


SECTION "A-A"
SCALE: NTS

* 8" CONCRETE PAVEMENT FOR RUBY QUARRY DRIVEWAY

| DRIVEWAY ID | DRIVEWAY TYPE | STATION | ELEV "A" | ELEV "B" | ELEV "C" | RADIUS LT (FT) | RADIUS RT (FT) | PROP WIDTH (FT) | DRIVEWAY LENGTH | | | | DRIVEWAY SLOPE | | | DRIVEWAYS (CONC) (SF) |
|---|---|---|---|---|---|---|---|---|---|---|---|---|---|---|---|---|
| | | | | | | | | | L1 (FT) | L2 (FT) | L3 (FT) | TOTAL (FT) | S1 | S2 | S3 | |
| 2-1 | CONCRETE | 129+39 | 1040.29 | - | 1041.23 | 15 | 15 | 21.00 | 20.69 | - | - | 20.69 | 4.5% | - | - | 623 |
| RUBY QUARRY | CONCRETE | 144+13 | 1051.09 | 1051.50 | 1052.68 | 50 | 30 | 101.00 | 12.20 | 6.00 | 17.60 | 35.80 | 3.4% | 2.0% | 6.0% | 4800 |
| 7-1 | CONCRETE | 150+89 | 1061.97 | 1062.20 | 1062.81 | 20 | 20 | 36.00 | 11.53 | - | 8.47 | 20.00 | 2.0% | - | 7.2% | 896 |

GENERAL NOTES

1. DRIVEWAYS SHOULD EXTEND TO THE LIMITS SHOWN IN THE PLANS UNLESS DIRECTED BY THE ENGINEER TO TIE INTO EXIST DRIVEWAY JOINTS WITHIN EXIST ROW.
2. CONCRETE DRIVEWAYS SHALL BE IN ACCORDANCE WITH CITY STANDARDS AND SPECIFICATIONS FOR RESIDENTIAL AND COMMERICAL.
3. ALL DRIVEWAY SLOPES ARE AT THE CENTER OF THE DRIVEWAY AND ARE APPROXIMATE. CONTRACTOR TO TIE IN ALL PROPOSED DRIVEWAYS TO EXISTING CONSTRUCTION JOINTS.
4. DRIVEWAY SHALL BE SLOPED AT A MAX OF 2% FOR A MINIMUM WIDTH OF 5' ACROSS DRIVEWAY BETWEEN PEDEDTRIAN RAMPS.

| NO | DATE | ISSUES AND REVISIONS |
|---|---|---|

STATE OF TEXAS
AUSTIN S. HELTON
124922
LICENSED
PROFESSIONAL ENGINEER
8/5/2022

Kimley»Horn
F-928
10814 JOLLYVILLE ROAD
BLDG. 4, STE 200
AUSTIN, TX 78759
PHONE: 512-418-1771

# DRIVEWAY DETAIL

SHEET 1 OF 1
ANDERSON MILL ROAD PHASE 2

CEDAR PARK



FILENAME: AMR-DRV-DET.dgn
PLOTTED: 8/5/2022 3:31:15 PM

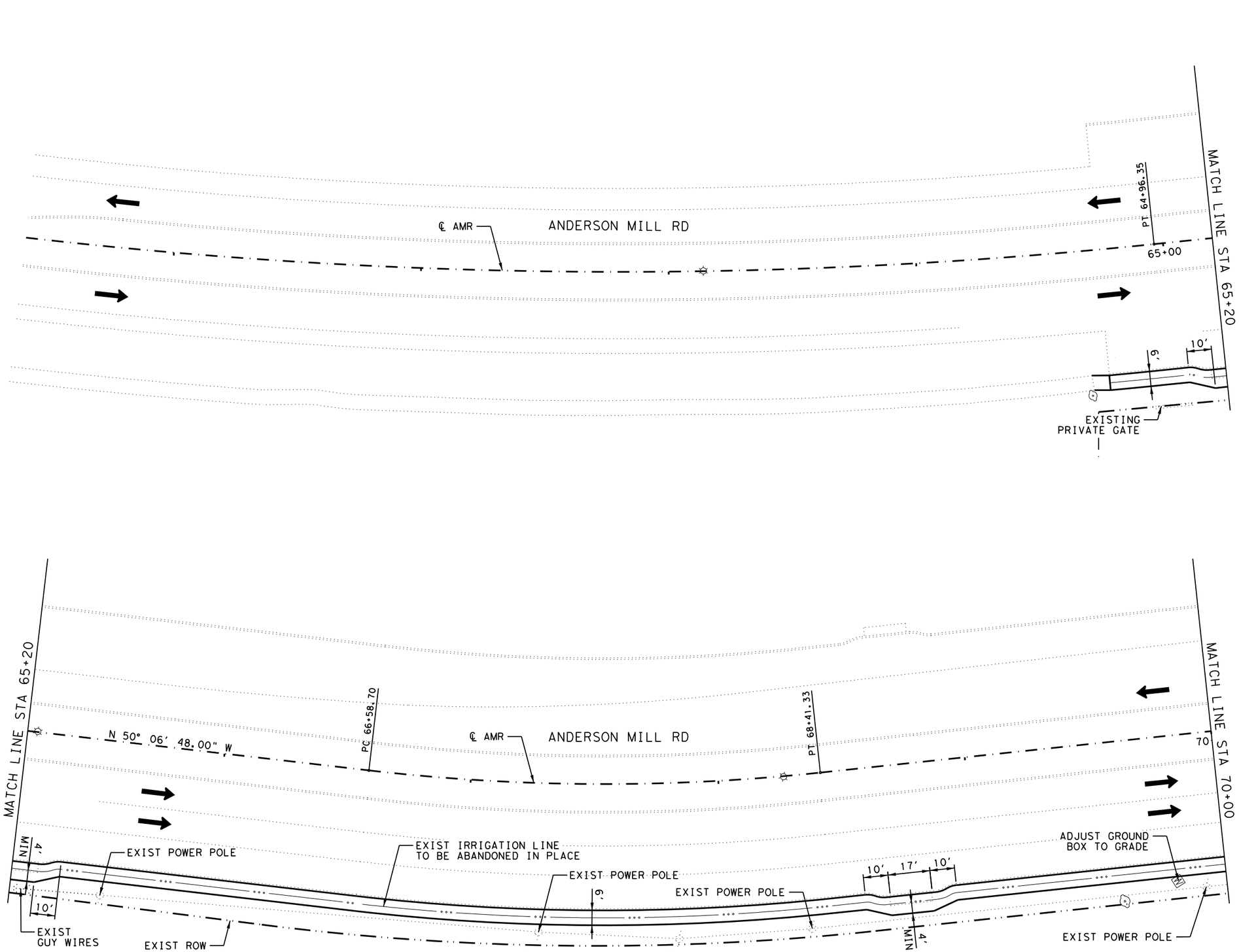


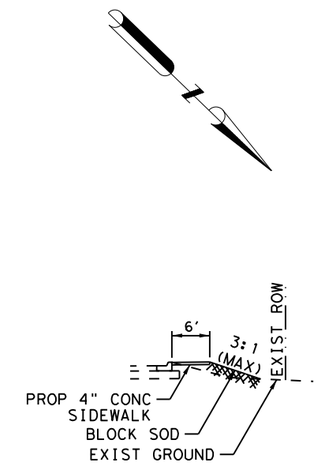


**SIDEWALK DETAIL**

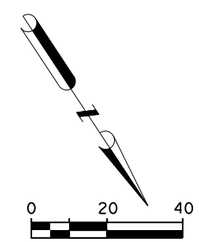


| NO | DATE | ISSUES AND REVISIONS |
|---|---|---|
| | | |

Kimley»Horn
F-928
10814 JOLLYVILLE ROAD
BLDG. 4, STE 200
AUSTIN, TX 78759
PHONE: 512-418-1771

# SIDEWALK LAYOUT

SHEET 1 OF 4
ANDERSON MILL ROAD PHASE 2

CEDAR PARK



FILENAME: AMR*ROW*SL*01.dgn
PLOTTED: 8/5/2022 3:32:31 PM

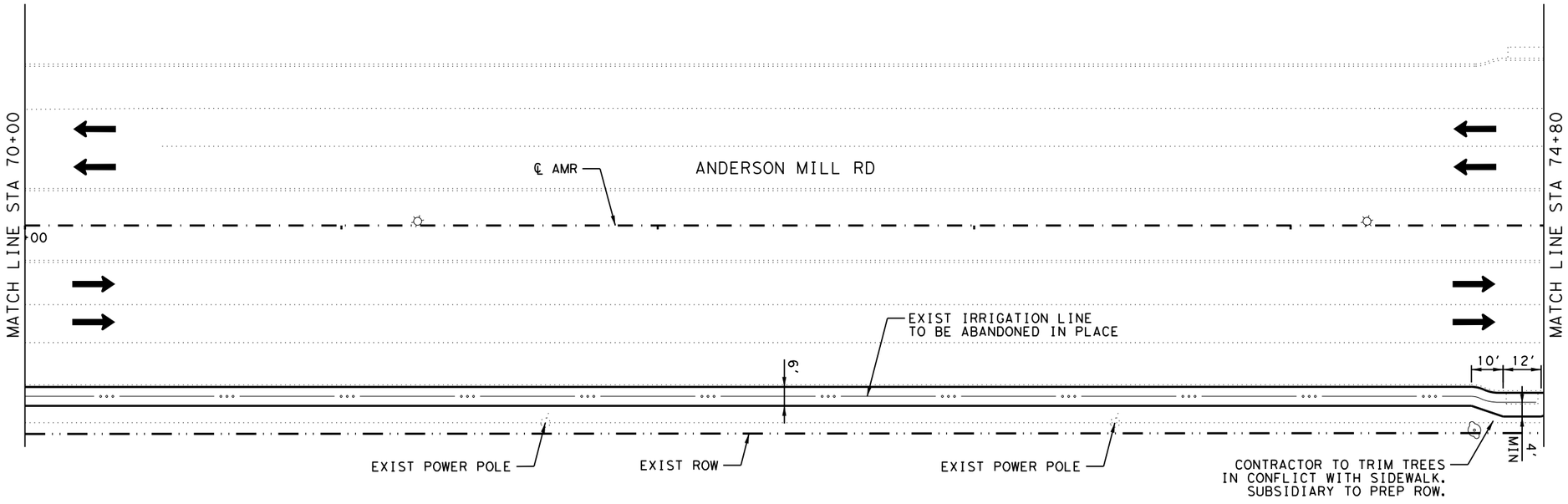


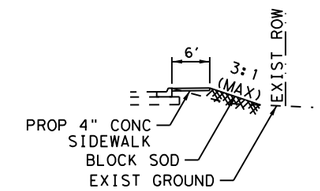


**SIDEWALK DETAIL**

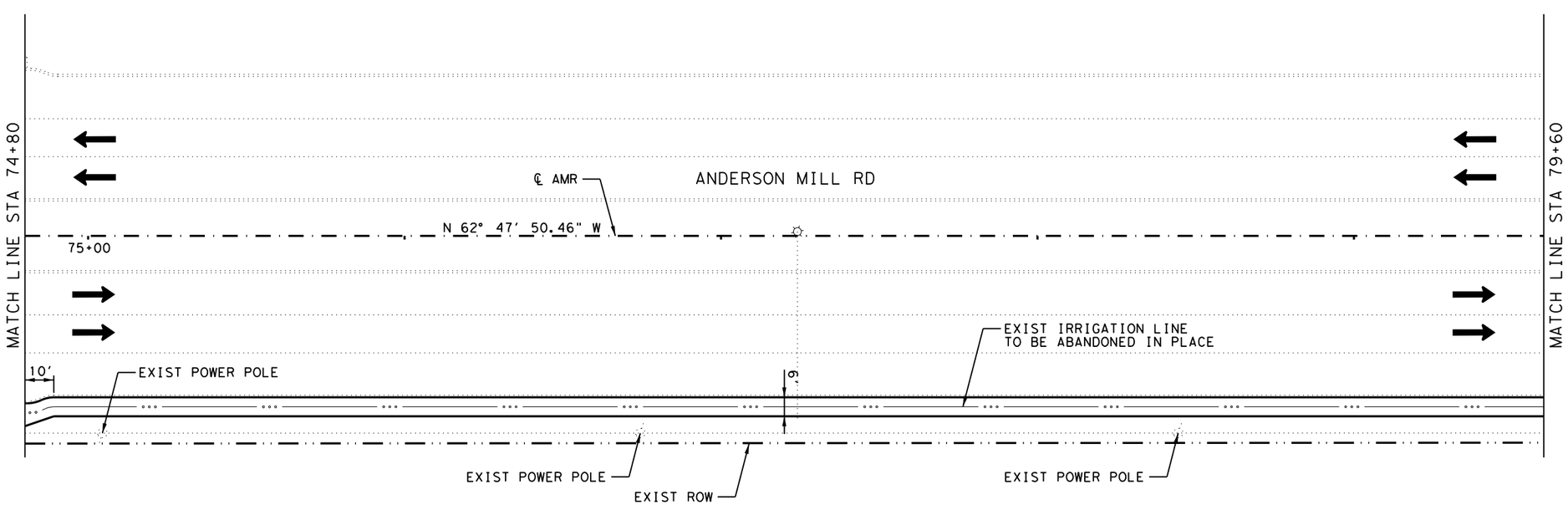


0 20 40

| NO | DATE | ISSUES AND REVISIONS |
|---|---|---|
| | | |

Kimley»Horn F-928
10814 JOLLYVILLE ROAD
BLDG. 4, STE 200
AUSTIN, TX 78759
PHONE: 512-418-1771

# SIDEWALK LAYOUT

SHEET 1 OF 4
ANDERSON MILL ROAD PHASE 2

CEDAR PARK



FILENAME: AMR*RDW*SL*02.dgn
PLOTTED: 8/5/2022 3:32:42 PM

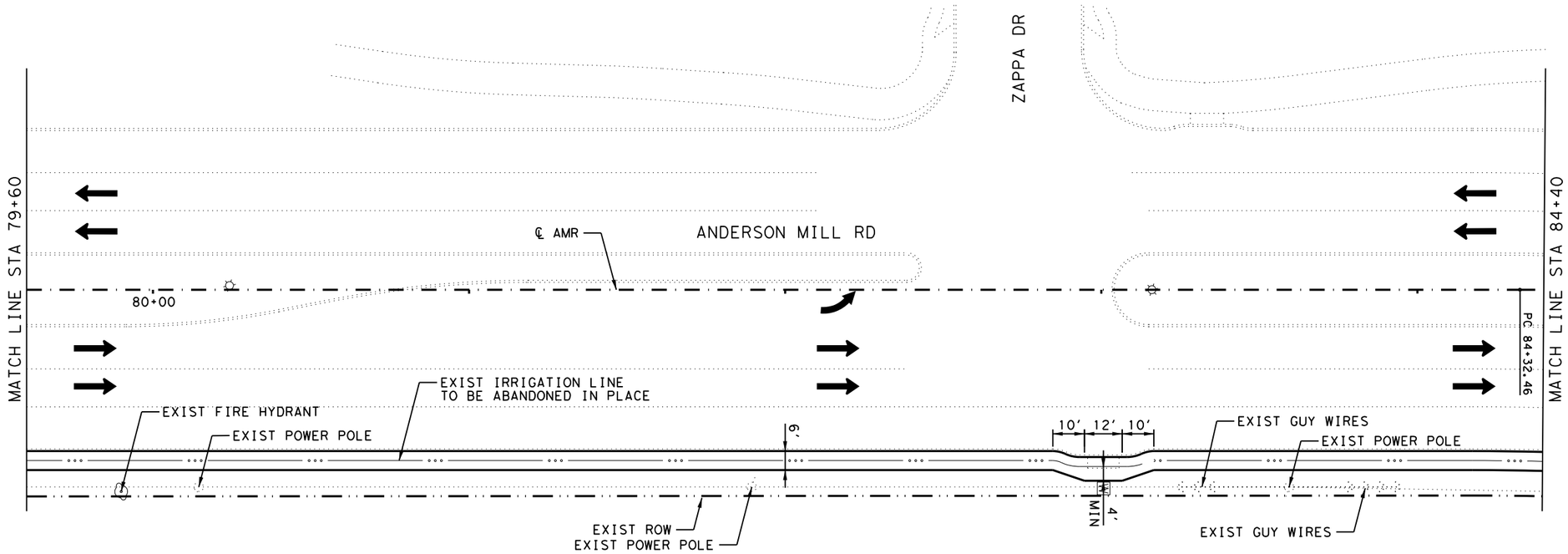


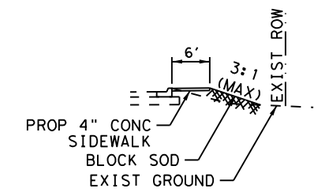


**SIDEWALK DETAIL**

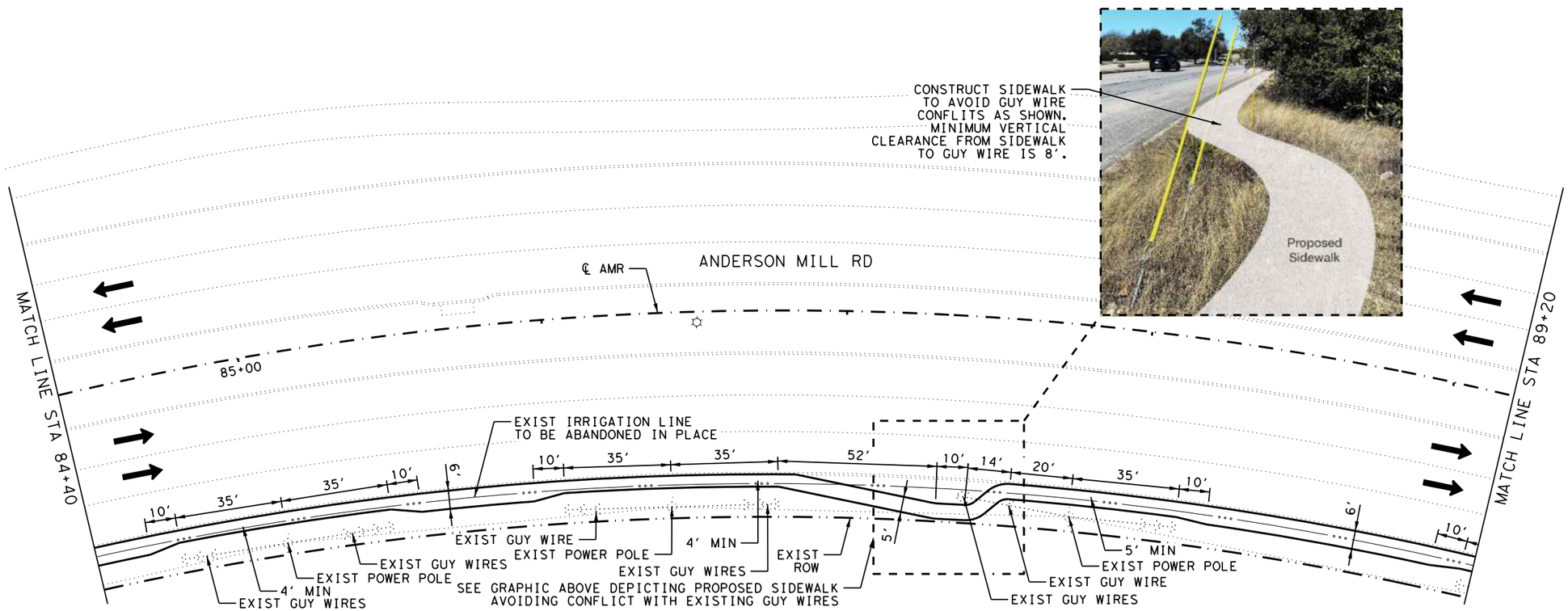


0 20 40

| NO | DATE | ISSUES AND REVISIONS |
|---|---|---|
| | | |


Kimley»Horn F-928
10814 JOLLYVILLE ROAD
BLDG. 4, STE 200
AUSTIN, TX 78759
PHONE: 512-418-1771


# SIDEWALK LAYOUT

SHEET 3 OF 4
ANDERSON MILL ROAD PHASE 2

CEDAR PARK



FILENAME: AMR+ROW+SL+03.dgn
PLOTTED: 8/5/2022 3:32:50 PM

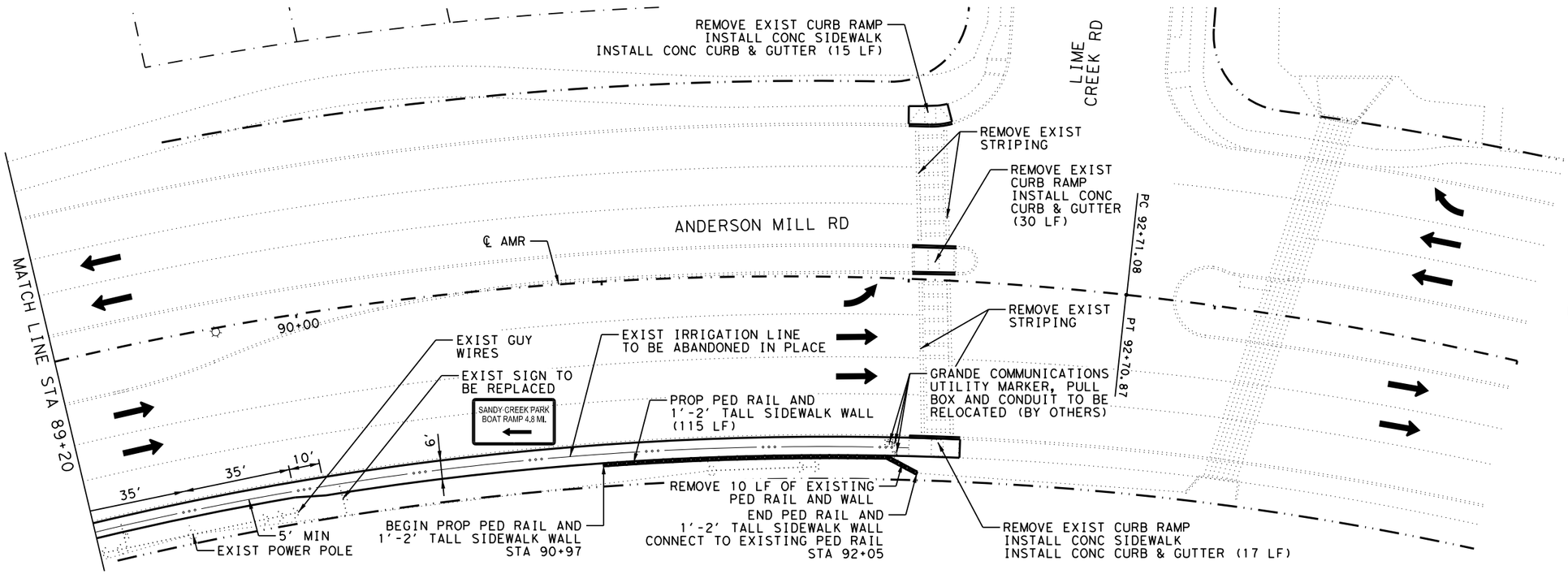


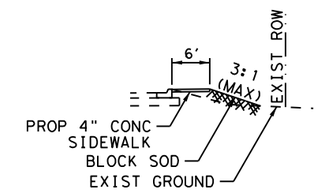


**SIDEWALK DETAIL**

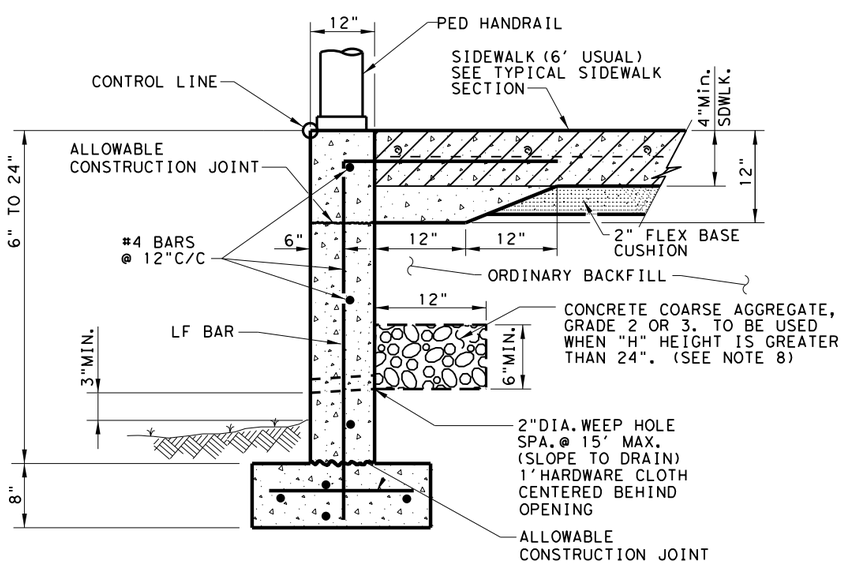


**SIDEWALK WALL**

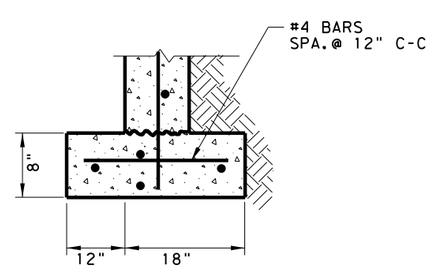


**FOOTING DETAIL**

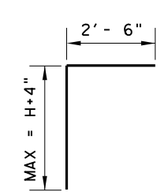


**BAR "LF"**

0 20 40

| NO | DATE | ISSUES AND REVISIONS |
|---|---|---|

Kimley»Horn F-928
10814 JOLLYVILLE ROAD
BLDG. 4, STE 200
AUSTIN, TX 78759
PHONE: 512-418-1771

SIDEWALK LAYOUT
SHEET 4 OF 4
ANDERSON MILL ROAD PHASE 2

CEDAR PARK



FILENAME: AMR+RDW+SL+04.dgn
PLOTTED: 8/5/2022 3:33:02 PM

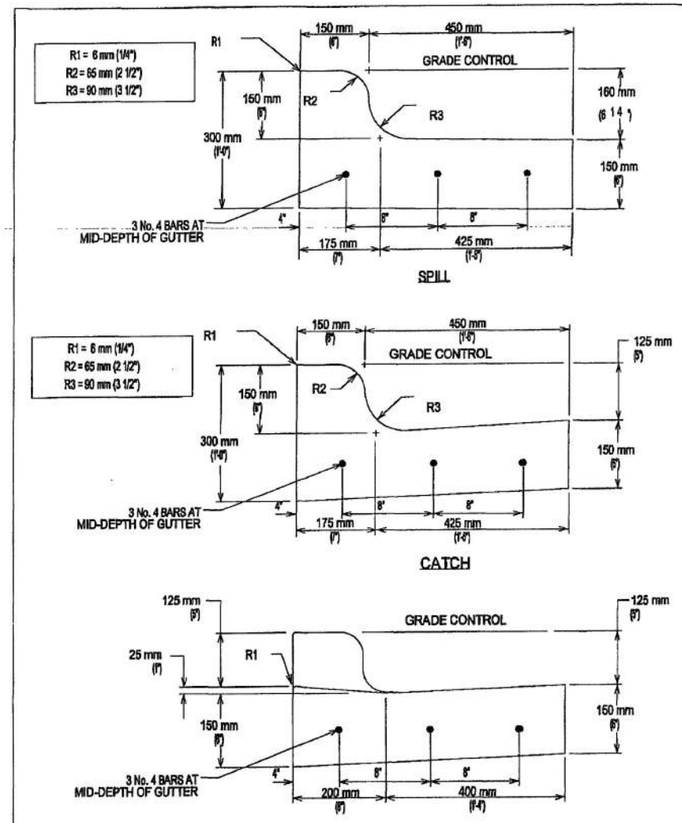


| CITY OF AUSTIN<br>DEPARTMENT OF PUBLIC WORKS | REINFORCED CURB AND GUTTER SECTION | |
|---|---|---|
| 1/4/10<br>ADOPTED | THE ARCHITECT/ENGINEER ASSUMES RESPONSIBILITY FOR APPROPRIATE USE OF THIS STANDARD. | STANDARD NO.<br>430S-2 |

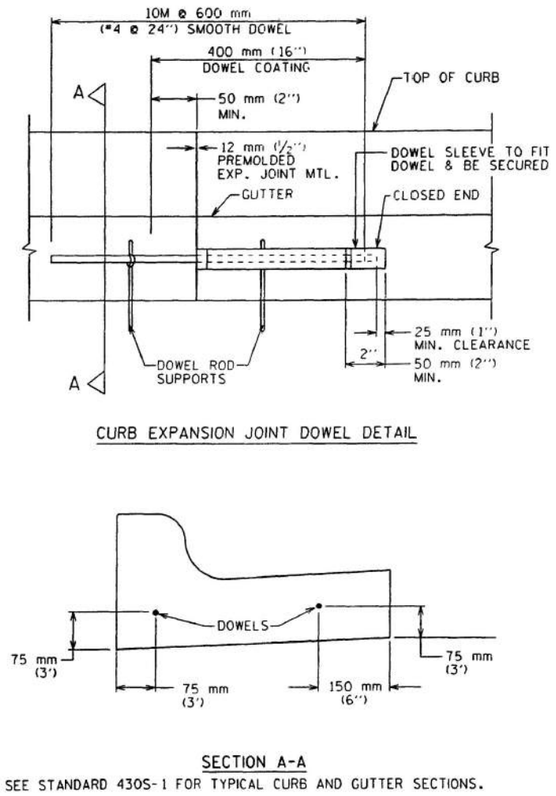


| CITY OF AUSTIN<br>DEPARTMENT OF PUBLIC WORKS AND TRANSPORTATION | CURB EXPANSION JOINT DOWEL DETAIL | |
|---|---|---|
| Lino Rivera 9/29/99<br>ADOPTED | THE ARCHITECT/ENGINEER ASSUMES RESPONSIBILITY FOR APPROPRIATE USE OF THIS STANDARD. | STANDARD NO.<br>430S-3 |

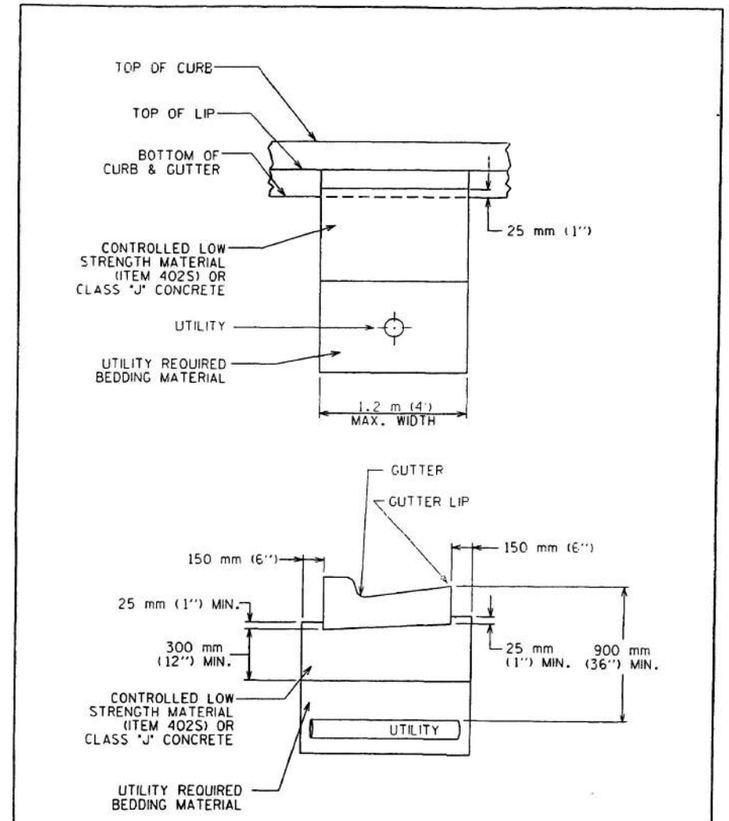


| CITY OF AUSTIN<br>DEPARTMENT OF PUBLIC WORKS AND TRANSPORTATION | CONCRETE BACKFILL<br>UNDER CURB & GUTTER | |
|---|---|---|
| Lino Rivera 9/29/99<br>ADOPTED | THE ARCHITECT/ENGINEER ASSUMES RESPONSIBILITY FOR APPROPRIATE USE OF THIS STANDARD. | STANDARD NO.<br>430S-4 |

| NO | DATE | ISSUES AND REVISIONS |
|---|---|---|


Kimley»Horn
F-928
10814 JOLLYVILLE ROAD
BLDG. 4, STE 200
AUSTIN, TX 78759
PHONE: 512-418-1771


STANDARD DETAILS
ROADWAY
SHEET 1 OF 7
ANDERSON MILL ROAD PHASE 2

CEDAR PARK



FILENAME: AMR*ROW*STD*01.dgn
PLOTTED: 8/5/2022 3:33:42 PM

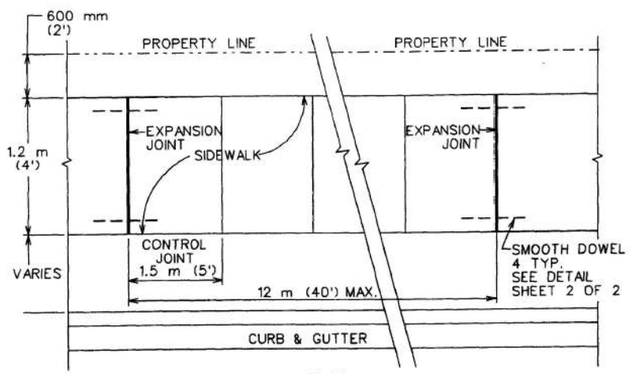


PLAN

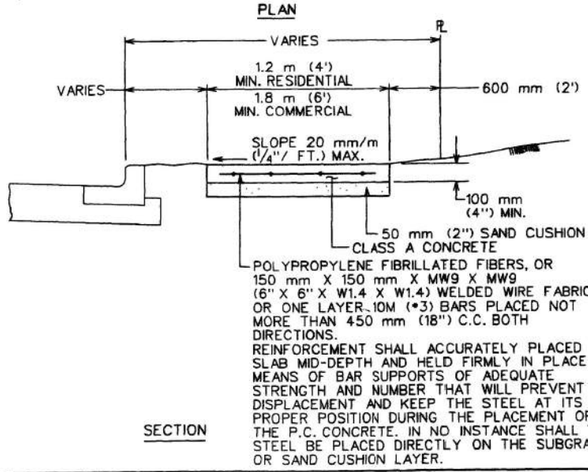


SECTION

| CITY OF AUSTIN<br>DEPARTMENT OF PUBLIC WORKS | SIDEWALK | |
|---|---|---|
| Bill Gardner 3/26/08<br>ADOPTED | THE ARCHITECT/ENGINEER ASSUMES RESPONSIBILITY FOR APPROPRIATE USE OF THIS STANDARD. | STANDARD NO.<br>432S-1<br>1 OF 3 |

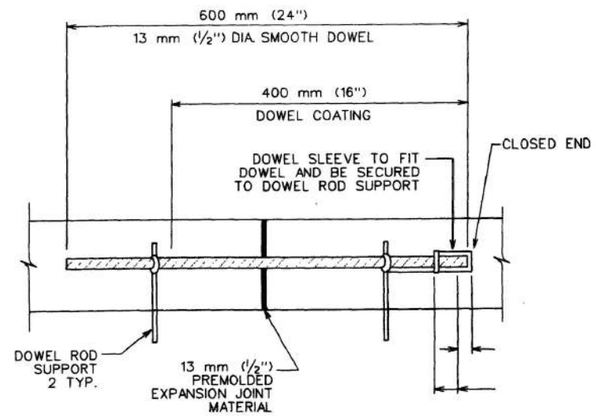


DOWEL DETAIL

| CITY OF AUSTIN<br>DEPARTMENT OF PUBLIC WORKS | SIDEWALK | |
|---|---|---|
| Bill Gardner 3/26/08<br>ADOPTED | THE ARCHITECT/ENGINEER ASSUMES RESPONSIBILITY FOR APPROPRIATE USE OF THIS STANDARD. | STANDARD NO.<br>432S-1<br>2 OF 3 |

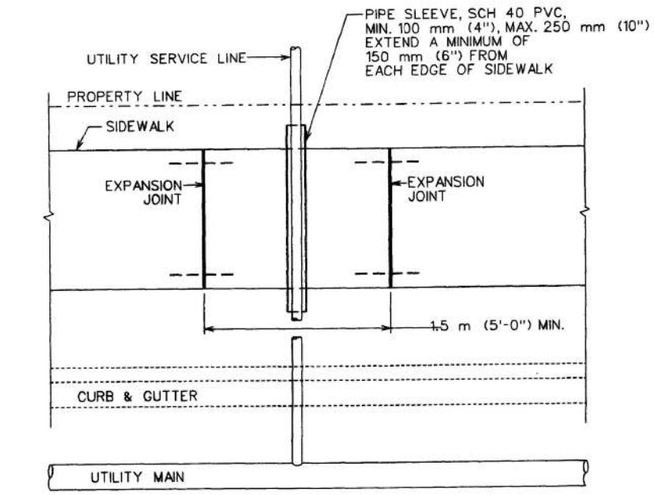


SIDEWALK OVER UTILITY SERVICE LINE PLAN

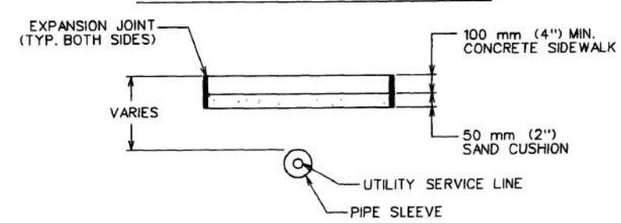


SECTION OF SIDEWALK OVER UTILITY SERVICE LINES

NOTES:
1. THIS STANDARD APPLIES TO THE INSTALLATION OF NEW UTILITIES OR UTILITIES BEING REPLACED BY A NEW LINE.
2. NO JOINTS IN UTILITY SERVICE PIPE TO BE LOCATED INSIDE PVC PIPE SLEEVE.

| CITY OF AUSTIN<br>DEPARTMENT OF PUBLIC WORKS | SIDEWALK | |
|---|---|---|
| Bill Gardner 3/26/08<br>ADOPTED | THE ARCHITECT/ENGINEER ASSUMES RESPONSIBILITY FOR APPROPRIATE USE OF THIS STANDARD. | STANDARD NO.<br>432S-1<br>3 OF 3 |

| NO | DATE | ISSUES AND REVISIONS |
|---|---|---|

Kimley»Horn
F-928
10814 JOLLYVILLE ROAD
BLDG. 4, STE 200
AUSTIN, TX 78759
PHONE: 512-418-1771

STANDARD DETAILS
ROADWAY
SHEET 2 OF 7
ANDERSON MILL ROAD PHASE 2

CEDAR PARK



FILENAME: AMR*RDW*STD*02.dgn
PLOTTED: 8/5/2022 3:33:59 PM

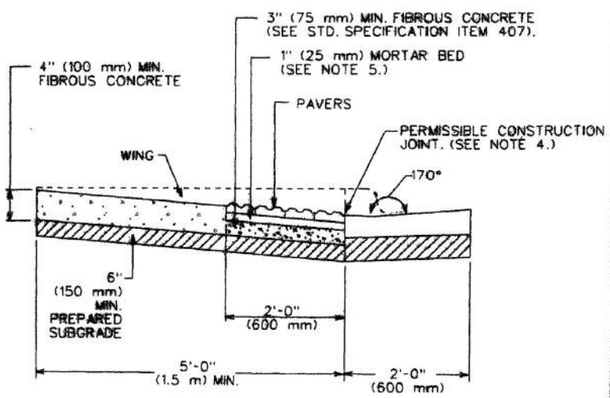


CROSS SECTION

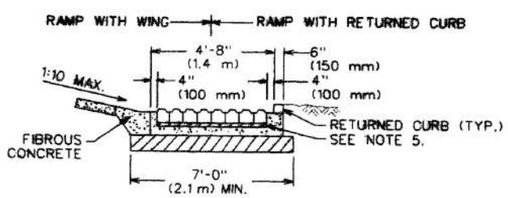


FRONT END VIEW

| CITY OF AUSTIN DEPARTMENT OF PUBLIC WORKS | DETECTABLE WARNING-PAVER (CITY PROPERTY/EASEMENTS) | |
|---|---|---|
| Bill Gardner 6/21/07 ADOPTED | THE ARCHITECT/ENGINEER ASSUMES RESPONSIBILITY FOR APPROPRIATE USE OF THIS STANDARD. | STANDARD NO. 432S-2A 1 OF 2 |

GENERAL NOTES:

1. THIS STANDARD IS APPLICABLE FOR RAMP CONSTRUCTION ON CITY PROPERTY AND EASEMENT AREAS ONLY.
2. PAVERS ARE REQUIRED FOR ALL CURB RAMP INSTALLATIONS.
3. PAVERS WILL HAVE DETECTABLE WARNING THAT CONSISTS OF RAISED TRUNCATED DOMES WITH A DIAMETER OF 0.9" (23 mm), A NOMINAL HEIGHT OF 0.2" (5 mm) AND A NOMINAL CENTER TO CENTER SPACING OF 2.35" (60 mm) AND SHALL CONSTRAST VISUALLY WITH ADJOINING SURFACES, EITHER LIGHT-ON-DARK OR DARK-ON-LIGHT (Re: ADAAG SECTION 4.29.2). MATERIAL USED TO PROVIDE CONTRAST SHALL BE AN INTEGRAL PART OF THE WALKING SURFACE. PAVER PATTERN SHALL BE BASKET WEAVE UNLESS DIRECTED OTHERWISE BY THE ENGINEER OR DESIGNATED REPRESENTATIVE.
4. TYPICAL SIDEWALK WIDTHS AND CURB RADII ARE SHOWN FOR ILLUSTRATION ONLY. REFER TO THE TRANSPORTATION CRITERIA MANUAL FOR SIDEWALK WIDTHS, CURB RADII AND CURB BASIS.
5. THE PERMISSIBLE CONSTRUCTION JOINT BETWEEN THE PAVERS AND THE ADJOINING SURFACE SHALL BE LIMITED TO 1/4" (6 mm) JOINT SIZE. GAPS LARGER THAN 1/4" (6 mm) MUST BE APPROVED BY THE ENGINEER OR DESIGNATED REPRESENTATIVE. ALL JOINTS BETWEEN BRICKS AND ADJOINING SURFACE SHALL BE MORTAR FILLED UNLESS DIRECTED OTHERWISE BY THE ENGINEER OR DESIGNATED REPRESENTATIVE.
6. MORTAR SHALL CONFORM TO STD. SPECIFICATION ITEM SECTION 403S.3.5, MORTAR AND GROUT. ALL OTHER CONCRETE SHALL CONFORM TO STD. SPECIFICATION ITEM 403S, CONCRETE FOR STRUCTURES, UNLESS OTHERWISE NOTED.
7. CURB RAMPS WITH RETURNED CURB MAY ONLY BE USED WHERE PEDESTRIANS WOULD NOT NORMALLY WALK DIAGONALLY ACROSS THE RAMP.

| CITY OF AUSTIN DEPARTMENT OF PUBLIC WORKS | DETECTABLE WARNING-PAVER (CITY PROPERTY/EASEMENTS) | |
|---|---|---|
| Bill Gardner 6/21/07 ADOPTED | THE ARCHITECT/ENGINEER ASSUMES RESPONSIBILITY FOR APPROPRIATE USE OF THIS STANDARD. | STANDARD NO. 432S-2A 2 OF 2 |

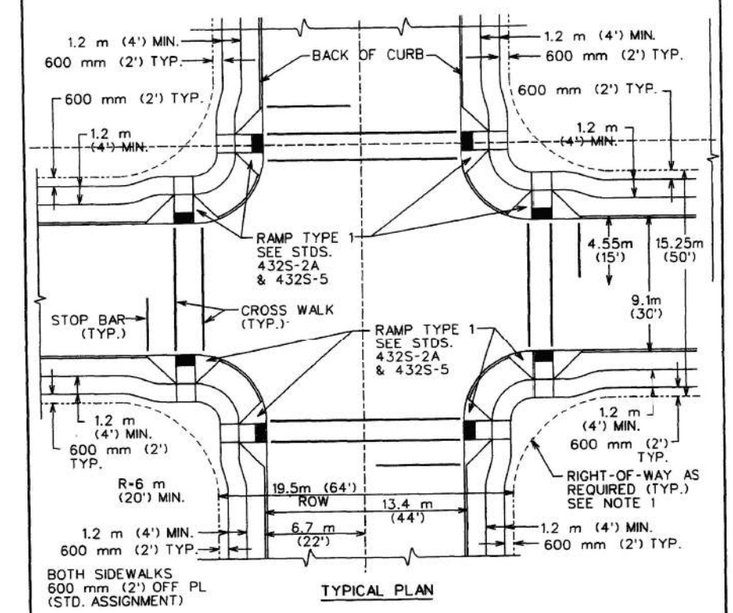


TYPICAL PLAN

| CITY OF AUSTIN DEPARTMENT OF PUBLIC WORKS | TYPE 1 CURB RAMPS-FULL INTERSECTION | |
|---|---|---|
| Bill Gardner 3/13/06 ADOPTED | THE ARCHITECT/ENGINEER ASSUMES RESPONSIBILITY FOR APPROPRIATE USE OF THIS STANDARD. | STANDARD NO. 432S-3 1 OF 3 |

| NO | DATE | ISSUES AND REVISIONS |
|---|---|---|


Kimley»Horn F-928
10814 JOLLYVILLE ROAD
BLDG. 4, STE 200
AUSTIN, TX 78759
PHONE: 512-418-1771


STANDARD DETAILS
ROADWAY
SHEET 3 OF 7
ANDERSON MILL ROAD PHASE 2

CEDAR PARK



FILENAME: AMR*RDW*STD*03.dgn
PLOTTED: 8/5/2022 3:34:20 PM

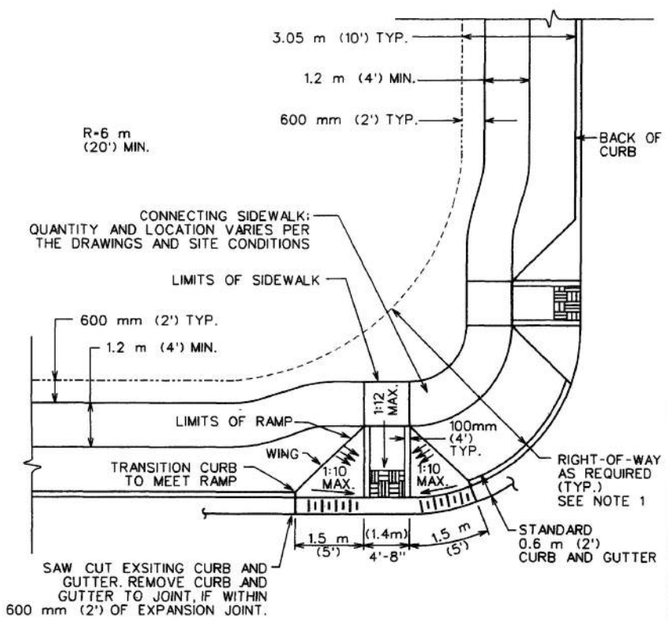


TYPICAL PLAN

| CITY OF AUSTIN DEPARTMENT OF PUBLIC WORKS | TYPE 1 CURB RAMPS-FULL INTERSECTION | |
|---|---|---|
| Bill Bardner 3/13/06 ADOPTED | THE ARCHITECT/ENGINEER ASSUMES RESPONSIBILITY FOR APPROPRIATE USE OF THIS STANDARD. | STANDARD NO. 432S-3 2 OF 3 |

GENERAL NOTES:

1. THIS STANDARD IS APPICABLE FOR RAMP CONSTRUCTION WITHIN RIGHT-OF-WAY OR EASEMENT ONLY.
2. THIS STANDARD REPRESENTS A TYPICAL CURB RAMP DESIGN FOR A NEWLY CONSTRUCTED INTERSECTION WITH A 6 m (20') RADIUS. LARGER RADII, STREET GRADES, LIMITED SIGHT DISTANCES, STREET CLASSIFICATION, SIGNALIZATION AND OTHER FACTORS MAY REQUIRE THE ENGINEER OR DESIGNATED REPRESENTATIVE TO MODIFY THIS STANDARD. SUFFICIENT RIGHT-OF-WAY SHALL BE DEDICATED SUCH THAT THE ENTIRE CURB RAMP, INCLUDING LANDING, AND THE INTER-CONNECTING SIDEWALK ARE CONTAINED WITHIN THE RIGHT-OF-WAY.
3. THE CURB, GUTTER AND RAMP SYSTEM SHALL BE CONFIGURED TO MAINTAIN ALL RUNOFF FROM A 25 YEAR FREQUENCY STORM WITHIN THE RIGHT-OF-WAY (DRAINAGE CRITERIA MANUAL SECTION 1.2.2.B). WHEN THERE IS AN ELEVATION DIFFERENCE BETWEEN THE BOTTOM OF RAMPS (IE. ELEVATION AT THE GUTTER) WITHIN A QUADRANT OF AN INTERSECTION, THE LOWER ELEVATION RAMP SHALL BE CONSTRUCTED WITH A POSITIVE RAMP SLOPE OF 1:12 IN ACCORDANCE WITH STANDARDS 432S-5, 432S-5A AND 432S-5B.
4. STANDARD ASSIGNMENT OF SIDEWALKS IS 600 mm (2') OFF PROPERTY LINE, EXCEPT AS INDICATED ON THE DRAWINGS.
5. ALTHOUGH CURB RAMPS MAY BE PLACED WITHIN THE RADIUS, PLACING THE RAMP OUTSIDE OF THE RADIUS WILL ALLOW FOR THE GREATEST DIFFERENCE IN ELEVATION BETWEEN THE RAMPS.
6. WINGS ARE REQUIRED ONLY IF PEDESTRIANS WOULD NORMALLY CROSS THE RAMP.
7. LANDINGS SHALL BE FLAT AND MATCH PT, PC OR TOP OF CURB ELEVATION.
8. CURB RAMPS WILL BE PERPENDICULAR TO ROADWAY CENTERLINES AND SHALL ALIGN WITH EACH OTHER.
9. GRADES ON SIDEWALKS LEADING TO OR FROM THE RAMPS SHALL FOLLOW CURB GRADES.
10. THE SLOPE OF THE SIDEWALK WHICH IS LOCATED WITHIN THE RADIUS AND CONNECTS TWO CURB RAMPS SHALL NOT EXCEED 1:20. THE DEVELOPER, AS PART OF THE CURB RAMP INSTALLATION, SHALL CONSTRUCT THIS CONNECTING SIDEWALK.
11. STRIPING AND SIGNAGE NOT REQUIRED IN ALL INSTANCES. STOP BARS, IF REQUIRED, SHALL BE LOCATED 1.2 m (4') FROM CROSSWALK.
12. IF A MEDIAN EXTENDS INTO THE CROSSWALK AREA, AN OPENING SHALL BE PROVIDED IN THE MEDIAN THE SAME WIDTH AS THE CURB RAMP.
13. CURB INLETS SHALL NOT BE LOCATED WITHIN 3.0 m (10') OF A CURB RAMP.
14. GUTTER SHALL PROVIDE SMOOTH TRANSITION TO RAMPS.

| CITY OF AUSTIN DEPARTMENT OF PUBLIC WORKS | TYPE 1 CURB RAMPS-FULL INTERSECTION | |
|---|---|---|
| Bill Bardner 3/13/06 ADOPTED | THE ARCHITECT/ENGINEER ASSUMES RESPONSIBILITY FOR APPROPRIATE USE OF THIS STANDARD. | STANDARD NO. 432S-3 3 OF 3 |

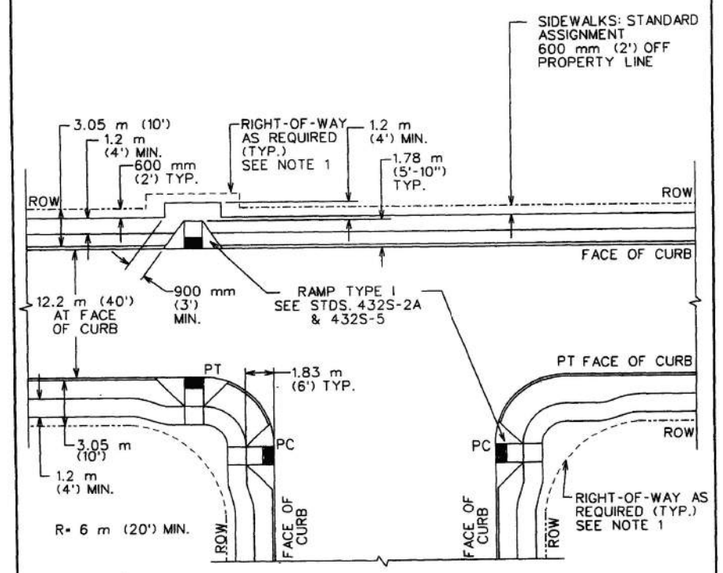


TYPICAL PLAN

| CITY OF AUSTIN DEPARTMENT OF PUBLIC WORKS | TYPE 1 CURB RAMPS - "T" INTERSECTION | |
|---|---|---|
| Bill Bardner 3/13/06 ADOPTED | THE ARCHITECT/ENGINEER ASSUMES RESPONSIBILITY FOR APPROPRIATE USE OF THIS STANDARD. | STANDARD NO. 432S-3A 1 OF 2 |

| NO | DATE | ISSUES AND REVISIONS |
|---|---|---|

Kimley»Horn F-928
10814 JOLLYVILLE ROAD
BLDG. 4, STE 200
AUSTIN, TX 78759
PHONE: 512-418-1771

STANDARD DETAILS
ROADWAY
SHEET 4 OF 7
ANDERSON MILL ROAD PHASE 2

CEDAR PARK



FILENAME: AMR-ROW-STD-04.dgn
PLOTTED: 8/5/2022 3:34:41 PM

GENERAL NOTES:

1. THIS STANDARD IS APPLICABLE FOR RAMP CONSTRUCTION WITHIN RIGHT-OF-WAY OR EASEMENT ONLY.
2. THIS STANDARD REPRESENTS A TYPICAL CURB RAMP DESIGN FOR A NEWLY CONSTRUCTED INTERSECTION WITH A 6 m (20') RADIUS. LARGER RADII, STREET GRADES, LIMITED SIGHT DISTANCES, STREET CLASSIFICATION, SIGNALIZATION AND OTHER FACTORS MAY REQUIRE THE ENGINEER OR DESIGNATED REPRESENTATIVE TO MODIFY THIS STANDARD. SUFFICIENT RIGHT-OF-WAY SHALL BE DEDICATED SUCH THAT THE ENTIRE CURB RAMP, INCLUDING LANDING, AND THE INTER-CONNECTING SIDEWALK ARE CONTAINED WITHIN THE RIGHT-OF-WAY.
3. THE CURB, GUTTER AND RAMP SYSTEM SHALL BE CONFIGURED TO MAINTAIN ALL RUNOFF FROM A 25 YEAR FREQUENCY STORM WITHIN THE RIGHT-OF-WAY (DRAINAGE CRITERIA MANUAL SECTION 1.2.2.B). WHEN THERE IS AN ELEVATION DIFFERENCE BETWEEN THE BOTTOM OF RAMPS (IE. ELEVATION AT THE GUTTER) WITHIN A QUADRANT OF AN INTERSECTION, THE LOWER ELEVATION RAMP SHALL BE CONSTRUCTED WITH A POSITIVE RAMP SLOPE OF 1:12 IN ACCORDANCE WITH STANDARDS 432S-5, 432S-5A AND 432S-5B.
4. STANDARD ASSIGNMENT OF SIDEWALKS IS 600 mm (2') OFF PROPERTY LINE, EXCEPT AS INDICATED ON THE DRAWINGS.
5. ALTHOUGH CURB RAMPS MAY BE PLACED WITHIN THE RADIUS, PLACING THE RAMP OUTSIDE OF THE RADIUS WILL ALLOW FOR THE GREATEST DIFFERENCE IN ELEVATION BETWEEN THE RAMPS.
6. WINGS ARE REQUIRED ONLY IF PEDESTRIANS WOULD NORMALLY CROSS THE RAMP.
7. LANDINGS SHALL BE FLAT AND MATCH PT, PC OR TOP OF CURB ELEVATION.
8. CURB RAMPS WILL BE PERPENDICULAR TO ROADWAY CENTERLINES AND SHALL ALIGN WITH EACH OTHER.
9. GRADES ON SIDEWALKS LEADING TO OR FROM THE RAMPS SHALL FOLLOW CURB GRADES.
10. THE SLOPE OF THE SIDEWALK WHICH IS LOCATED WITHIN THE RADIUS AND CONNECTS TWO CURB RAMPS SHALL NOT EXCEED 1:20. THE DEVELOPER, AS PART OF THE CURB RAMP INSTALLATION, SHALL CONSTRUCT THIS CONNECTING SIDEWALK.
11. STRIPING AND SIGNAGE NOT REQUIRED IN ALL INSTANCES. STOP BARS, IF REQUIRED, SHALL BE LOCATED 1.2 m (4') FROM CROSSWALK.
12. IF A MEDIAN EXTENDS INTO THE CROSSWALK AREA, AN OPENING SHALL BE PROVIDED IN THE MEDIAN THE SAME WIDTH AS THE CURB RAMP.
13. CURB INLETS SHALL NOT BE LOCATED WITHIN 3.0 m (10') OF A CURB RAMP.
14. GUTTER SHALL PROVIDE SMOOTH TRANSITION TO RAMPS.

| CITY OF AUSTIN<br>DEPARTMENT OF PUBLIC WORKS | TYPE 1 CURB RAMPS - "T" INTERSECTION | |
|---|---|---|
| Bill Gardner 3/13/06<br>ADOPTED | THE ARCHITECT/ENGINEER ASSUMES RESPONSIBILITY FOR APPROPRIATE USE OF THIS STANDARD. | STANDARD NO.<br>432S-3A<br>2 OF 2 |

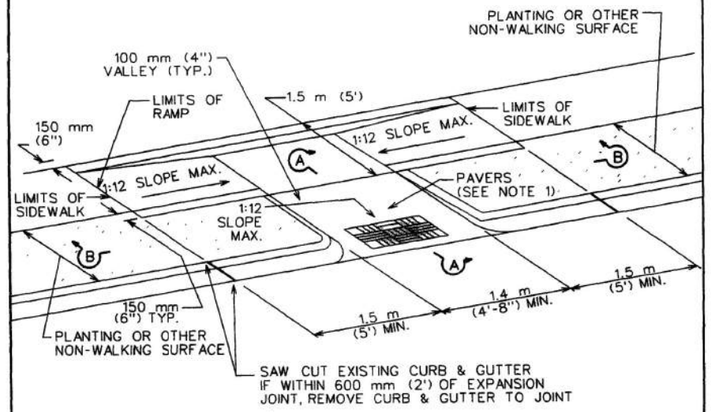


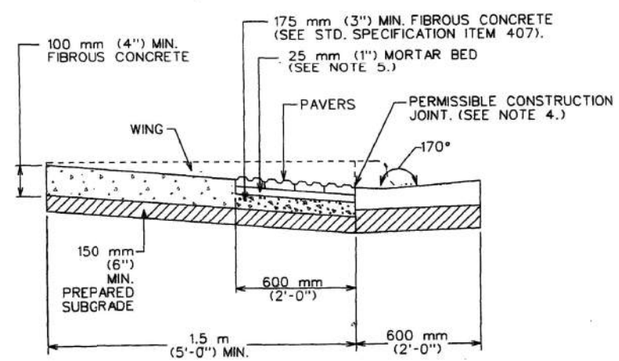


SECTION A-A

| CITY OF AUSTIN<br>DEPARTMENT OF PUBLIC WORKS | COMBINED SIDEWALK CURB RAMP WITH PAVERS | |
|---|---|---|
| Bill Gardner 3/13/06<br>ADOPTED | THE ARCHITECT/ENGINEER ASSUMES RESPONSIBILITY FOR APPROPRIATE USE OF THIS STANDARD. | STANDARD NO.<br>432S-3F<br>1 OF 2 |

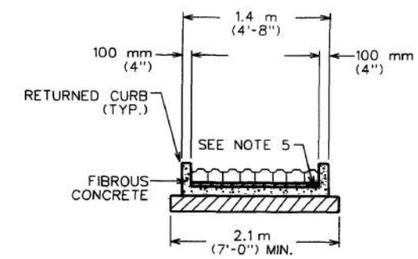


SECTION B-B

GENERAL NOTES:

1. THIS STANDARD IS APPLICABLE FOR RAMP CONSTRUCTION WITHIN RIGHT-OF-WAY OR EASEMENT ONLY.
2. PAVERS WILL HAVE DETECTABLE WARNING THAT CONSISTS OF RAISED TRUNCATED DOMES WITH A DIAMETER OF 23 mm (0.9"), A NOMINAL HEIGHT OF 5 mm (0.2") AND A NOMINAL CENTER TO CENTER SPACING OF 60 mm (2.35") AND SHALL CONTRAST VISUALLY WITH ADJOINING SURFACES, EITHER LIGHT-ON-DARK OR DARK-ON-LIGHT (Re: ADAAG SECTION 4.29.2). MATERIAL USED TO PROVIDE CONTRAST SHALL BE AN INTEGRAL PART OF THE WALKING SURFACE. A BASKET WEAVE PAVER PATTERN SHALL BE USED UNLESS DIRECTED BY THE ENGINEER OR DESIGNATED REPRESENTATIVE. PAVER PATTERN VARIES PER MANUFACTURER'S RECOMMENDATIONS. REFER TO STANDARD DETAIL 432S-5 FOR PAVER BASE PREPARATION DETAILS.
3. THE CURB, GUTTER AND RAMP SYSTEM SHALL BE CONFIGURED TO MAINTAIN ALL RUNOFF FROM A 25 YEAR FREQUENCY STORM WITHIN THE RIGHT-OF-WAY (DRAINAGE CRITERIA MANUAL SECTION 1.2.2.B).
4. TYPICAL SIDEWALK WIDTHS AND CURB RADII ARE SHOWN FOR ILLUSTRATION ONLY. REFER TO THE TRANSPORTATION CRITERIA MANUAL FOR SIDEWALK WIDTHS, CURB RADII AND CURB BASIC REQUIREMENTS.
5. THE PERMISSIBLE CONSTRUCTION JOINT BETWEEN THE PAVERS AND THE ADJOINING SURFACE SHALL BE LIMITED TO 6 mm (1/4") JOINT SIZE. GAPS LARGER THAN 6 mm (1/4") MUST BE APPROVED BY THE ENGINEER OR DESIGNATED REPRESENTATIVE. ALL JOINTS BETWEEN BRICKS AND ADJOINING SURFACE SHALL BE MORTAR FILLED UNLESS DIRECTED OTHERWISE BY THE ENGINEER OR DESIGNATED REPRESENTATIVE.
6. MORTAR SHALL CONFORM TO STD. SPECIFICATION ITEM SECTION 403S.3.5, MORTAR AND GROUT. ALL OTHER CONCRETE SHALL CONFORM TO STD. SPECIFICATION ITEM 403S, CONCRETE FOR STRUCTURES, UNLESS OTHERWISE NOTED.
7. CURB RAMPS WITH 100 mm (4") CONCRETE VALLEY MAY ONLY BE USED WHERE PEDESTRIANS WOULD NOT NORMALLY WALK DIAGONALLY ACROSS THE RAMP.

| CITY OF AUSTIN<br>DEPARTMENT OF PUBLIC WORKS | COMBINED SIDEWALK CURB RAMP WITH PAVERS | |
|---|---|---|
| Bill Gardner 3/13/06<br>ADOPTED | THE ARCHITECT/ENGINEER ASSUMES RESPONSIBILITY FOR APPROPRIATE USE OF THIS STANDARD. | STANDARD NO.<br>432S-3F<br>2 OF 2 |

| NO | DATE | ISSUES AND REVISIONS |
|---|---|---|


Kimley»Horn F-928
10814 JOLLYVILLE ROAD
BLDG. 4, STE 200
AUSTIN, TX 78759
PHONE: 512-418-1771


STANDARD DETAILS
ROADWAY
SHEET 5 OF 7
ANDERSON MILL ROAD PHASE 2

CEDAR PARK



FILENAME: AMR*ROW*STD*05.dgn
PLOTTED: 8/5/2022 3:35:00 PM

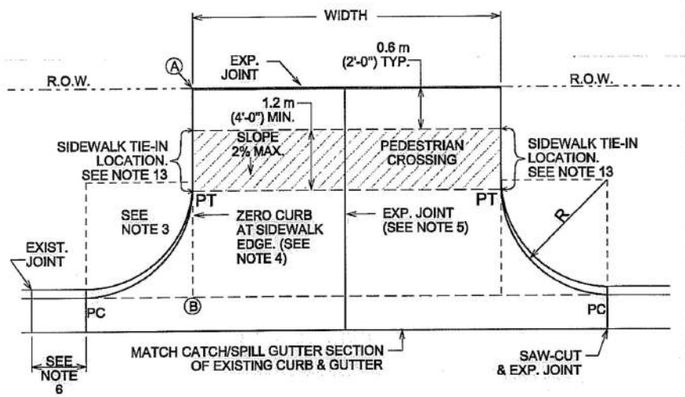


PLAN

NOTE: ALL DRIVEWAYS SHALL BE SLOPED TOWARDS THE STREET FROM THE R.O.W. LINE. ELEVATION OF POINT (A) ABOVE POINT (B) IS, TYPICALLY A MINIMUM OF 150 mm (6") PLUS 20 mm/m (1/4" RISE/FOOT) OVER DISTANCE "X" IN METERS (FEET).

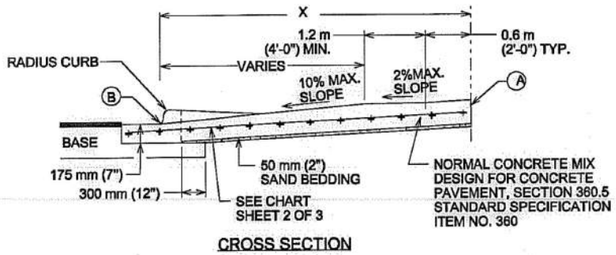


CROSS SECTION

| CITY OF AUSTIN DEPARTMENT OF PUBLIC WORKS | TYPE II DRIVEWAY | |
|---|---|---|
| 2/24/16 ADOPTED | THE ARCHITECT/ENGINEER ASSUMES RESPONSIBILITY FOR APPROPRIATE USE OF THIS STANDARD. | STANDARD NO. 433S-2 1 OF 2 |

| USE | THICKNESS | REINFORCEMENT |
|---|---|---|
| DRIVEWAYS FOR PASSENGER VEHICLE PARKING LOTS | 150 mm (6") MIN. | 125 mm (5") MIN. CONCRETE WITH ONE LAYER OF13M (#4) BARS PLACED ON CHAIRS AT MIDDEPTH OF SLAB AT NO MORE THAN 450 mm (18") O.C. BOTH DIRECTIONS |
| ALL OTHERS | 175 mm (7") MIN. | 125 mm (5") MIN. CONCRETE WITH ONE LAYER OF13M (#4) BARS PLACED ON CHAIRS AT MIDDEPTH OF SLAB AT NO MORE THAN 450 mm (18") O.C. BOTH DIRECTIONS |

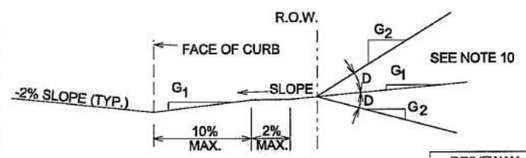


ALLOWABLE GRADES

| DRIVEWAY VOLUME (ADT) | D=GRADE CHANGE | |
|---|---|---|
| | STD. | MAX |
| >1500 | 0% | 3% |
| 500-1500 | 3% | 6% |
| < 500 | 6% | 15% |

NOTES:

1. ALL TYPE II DRIVEWAYS SHALL HAVE RADIUS ENDS.
2. DRIVEWAY WIDTHS AND RADII DIMENSIONS, ONE/TWO WAY TRAVEL REQUIREMENTS, AND GEOMETRIC LAY-OUT ARE HIGHLY VARIABLE. SUBJECT TO SITE SPECIFIC CONDITIONS AND REQUIREMENTS. SEE TRANSPORTATION CRITERIA MANUAL. SECTION 5 "DRIVEWAYS".
3. THE DRIVEWAY EDGE SHALL BE SMOOTHLY TRANSITITIONED INTO THE SIDEWALK TIE-IN LOCATION BEGINNING AT THE RADIUS PC LINE.
4. "ZERO" CURB AT PT OR SIDEWALK EDGE, WHICHEVER IS ENCOUNTERED FIRST.
5. PLACE AN EXPANSION JOINT DOWN THE CENTER OF DRIVEWAY ALL DRIVEWAYS.
6. IF DIMENSION IS LESS THAN 1.5 METERS (5 FEET), REMOVE CURB AND GUTTER TO EXISTING JOINT AND POUR MONOLITHICALLY WITH DRIVEWAY.
7. IF THE BASE IS OVER-EXCAVATED WHERE THE CURB AND GUTTER WERE REMOVED, BACKFILL WITH CONCRETE MONOLITHICALLY WITH THE DRIVEWAY.
8. TYPE II DRIVEWAYS ARE TO BE LOCATED NO CLOSER TO THE CORNER OF INTERSECTING RIGHT OF WAY THAN 60% OF PARCEL FRONTAGE AT 30 METERS (100 FEET): WHICHEVER IS LESS.
9. DRIVEWAY SHALL NOT BE CONSTRUCTED WITHIN THE CURB RETURN OF A STREET INTERSECTION.
10. WHILE THE PROPERTY OWNER REMAINS RESPONSIBLE FOR GRADE BREAKS WITHIN PRIVATE PROPERTY, THE FIRE DEPARTMENT SHALL BE CONSULTED WHERE THE DRIVEWAY IS ESSENTIAL TO EMERGENCY VEHICLE ACCESS AND "G2 IS GREATER THAN 15%.
11. USE 12 MM (1/2") ASPHALT BOARD OR OTHER APPROVED MATERIAL FOR CURB AND GUTTER EXPANSION JOINTS. SIDEWALK, AT THE R.O.W. LINE AND AT MIDWIDTH, SEE NOTE 5.
12. SEE TRANSPORTATION CRITERIA MANUAL, SECTION 5 FOR OTHER DRIVEWAY REQUIREMENTS.
13. THE SIDEWALK, REGARDLESS OF ITS LOCATION WITH RESPECT TO THE CURB OR PROPERTY LINE, SHALL BE CONNECTED TO THE DRIVEWAY AT THESE LOCATIONS.
14. WATER METER BOXES AND WASTEWATER CLEAN OUTS ARE PROHIBITED FROM BEING LOCATED IN DRIVEWAY AREAS.

| CITY OF AUSTIN DEPARTMENT OF PUBLIC WORKS | TYPE II DRIVEWAY | |
|---|---|---|
| 2/24/16 ADOPTED | THE ARCHITECT/ENGINEER ASSUMES RESPONSIBILITY FOR APPROPRIATE USE OF THIS STANDARD. | STANDARD NO. 433S-2 2 OF 2 |

| NO | DATE | ISSUES AND REVISIONS |
|---|---|---|

Kimley»Horn F-928
10814 JOLLYVILLE ROAD
BLDG. 4, STE 200
AUSTIN, TX 78759
PHONE: 512-418-1771

STANDARD DETAILS
ROADWAY
SHEET 6 OF 7
ANDERSON MILL ROAD PHASE 2

CEDAR PARK



FILENAME: AMR*RDW*STD*08.dgn
PLOTTED: 8/5/2022 3:35:18 PM

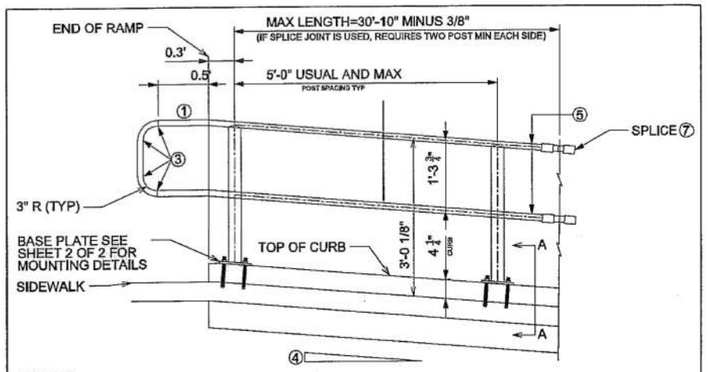


LEGEND
1. PARALLEL TO THE GROUND.
2. SHOP SPLICE IS PERMITTED WITH MINIMUM 85 PERCENT PENETRATION. THE WELD MAY BE SQUARE GROOVE OR SINGLE VEE GROOVE. GRIND SMOOTH.
3. SEE RAMP DETAIL LOCATED ELSEWHERE IN DRAWINGS FOR RAMP SLOPE AND DIMENSIONS. MAXIMUM RAMP SLOPE WILL NOT EXCEED 8.3 PERCENT. LEVEL LANDING REQUIRED FOR EACH 30" RISE IF GRADE EXCEEDS 5 PERCENT.
4. 1" DIA EXTRA HEAVY PIPE (1.315" O.D. , 0.179" WALL THICKNESS). PARALLEL TO RAMP/ SIDEWALK. PROVIDE HOLES AS NEEDED IN 1" DIA PIPE FOR GALVANIZING DRAINAGE AND VENTING.
5. 2 ½ DIA STANDARD PIPE (2.875" O.D. , 0.202" WALL THICKNESS). PLUMB ALL POSTS. SEE POST MOUNT DETAIL FOR CRIMPING AND TRIMMING POST TO FIT DIA OF TOP RAIL. PROVIDE HOLES AS NEEDED IN POST FOR GALVANIZING DRAINAGE AND VENTING.
6. SEE HANDRAIL FABRICATION DETAILS FOR SPLICE JOINTS.
7. CENTER LINE ⅝ DIA ROUND BAR EQ SPACES AT 4 ½ " MAX. PLUMB ALL PICKETS.

NOTE:
IF SPLICE JOINT IS USED, REQUIRES TWO POST MINIMUM EACH SIDE

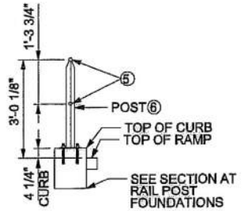


SECTION A-A

NOTES
* WHEN NEEDED FOR ACCESSIBILITY (GRADE >5 PERCENT) OR AS NEEDED FOR PEDESTRIAN SAFETY.
* NOT TO BE USED ON BRIDGES
* ONE SHOP SPLICE PER PANEL IS PERMITTED WITH MINIMUM 85 PERCENT PENETRATION. THE WELD MAY BE SQUARE GROOVE OR SINGLE VEE GROOVE. GRIND SMOOTH.

| CITY OF AUSTIN DEPARTMENT OF PUBLIC WORKS | PEDESTRIAN ADA HANDRAIL ON CURB- OPTION 2 | STANDARD NO. |
|---|---|---|
| Kris Sandoval-Green 1/4/11 ADOPTED | THE ARCHITECT/ENGINEER ASSUMES RESPONSIBILITY FOR APPROPRIATE USE OF THIS STANDARD. | 707-3 1 OF 2 |

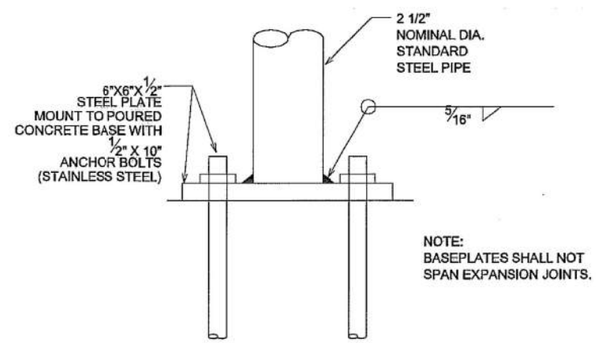


NOTE:
BASEPLATES SHALL NOT SPAN EXPANSION JOINTS.

BASE PLATE DETAIL

| CITY OF AUSTIN DEPARTMENT OF PUBLIC WORKS | PEDESTRIAN ADA HANDRAIL ON CURB- OPTION 2 | STANDARD NO. |
|---|---|---|
| Kris Sandoval-Green 1/4/11 ADOPTED | THE ARCHITECT/ENGINEER ASSUMES RESPONSIBILITY FOR APPROPRIATE USE OF THIS STANDARD. | 707-3 2 OF 2 |

| NO | DATE | ISSUES AND REVISIONS |
|---|---|---|

Kimley»Horn F-928
10814 JOLLYVILLE ROAD
BLDG. 4, STE 200
AUSTIN, TX 78759
PHONE: 512-418-1771

STANDARD DETAILS
ROADWAY
SHEET 7 OF 7
ANDERSON MILL ROAD PHASE 2

CEDAR PARK



FILENAME: AMR*RDW*STD*10.dgn
PLOTTED: 8/5/2022 3:36:02 PM

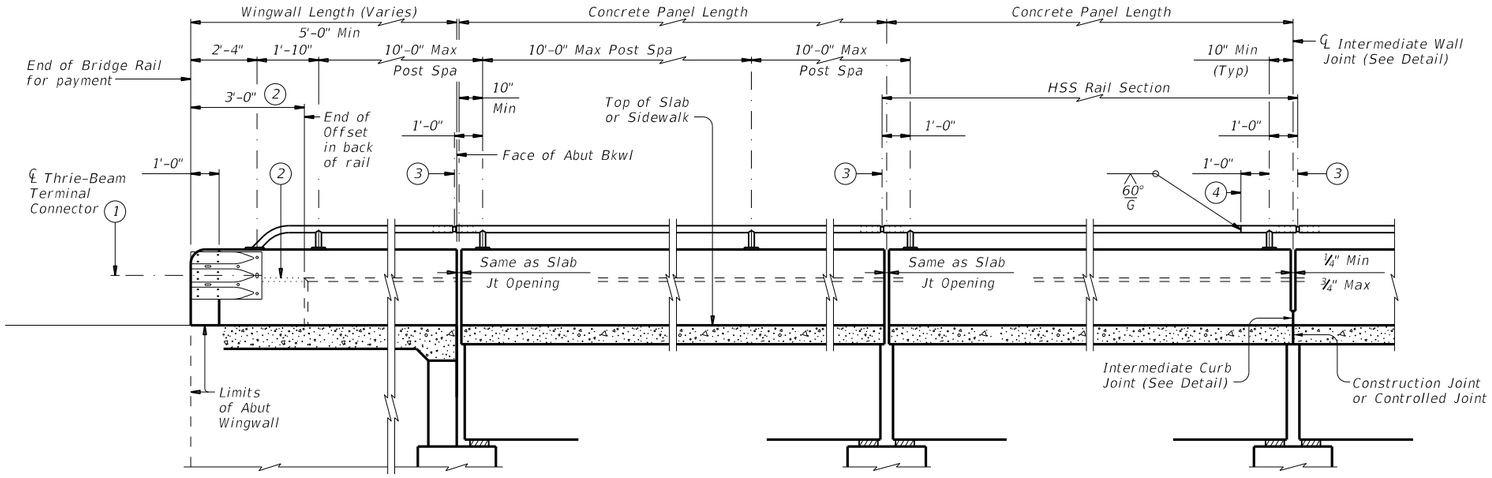


AT ABUTMENTS

AT BENTS WITH SLAB EXP JOINTS

AT BENTS WITHOUT SLAB EXP JOINTS

## ROADWAY ELEVATION OF RAIL

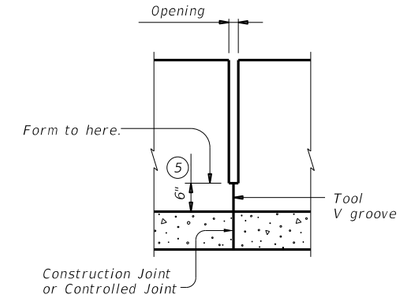


## INTERMEDIATE WALL JOINT DETAIL

Provide at all interior bents without slab expansion joints.

1. Terminal Connectors and associated hardware are to be paid for under the Item "Metal Beam Guard Fence". Attach Metal Beam Guard Fence Transitions to the bridge rail and extend along the embankment unless otherwise shown in the plans.
2. Back of rail offset may, with Engineer's approval, be continued to the end of the railing.
3. ℄ Exp Joint or Splice Joint as required.
4. One shop splice per HSS rail section is permitted with minimum 85 percent penetration. The weld may be square groove, or single vee groove. Grind smooth.
5. Increase 2" for structures with overlay.
6. Place 4 additional Bars R(#4) 3'-8" in length inside Bars S(#4) and centered 2'-0" from end of rail when Terminal Connections are required. Field bend as needed.
7. HSS 2.875 x 0.203
8. HSS 2.375 x 0.154
9. ⅜" Dia Hole in bottom of HSS rail (Minimum 1 hole between posts ~ Typ)

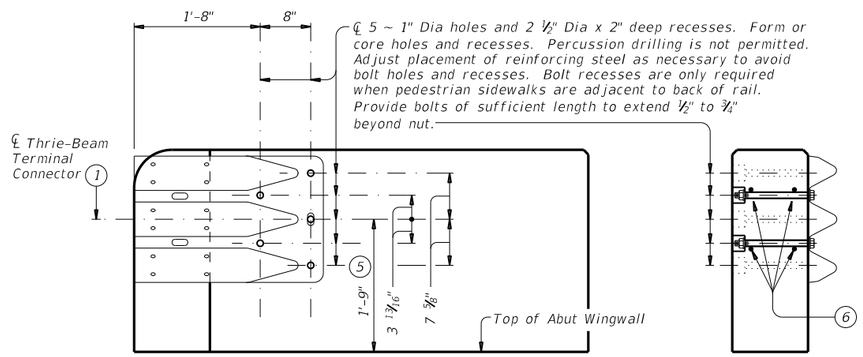


ELEVATION

SECTION

## TERMINAL CONNECTION DETAILS

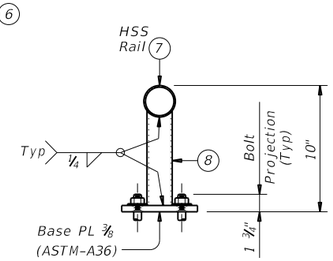


TRANSVERSE SECTION

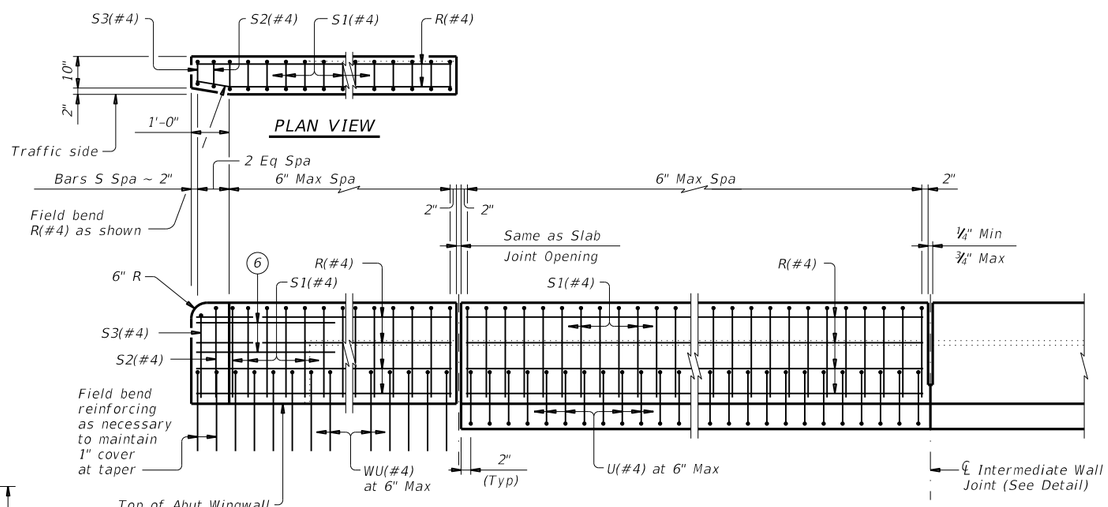


AT ABUT WINGWALL

AT BENTS WITH SLAB EXP JOINTS

AT SLAB

AT BENTS WITHOUT SLAB EXP JOINTS

## ELEVATION SHOWING TYPICAL REINFORCING PLACEMENT

(Showing without raised sidewalk)

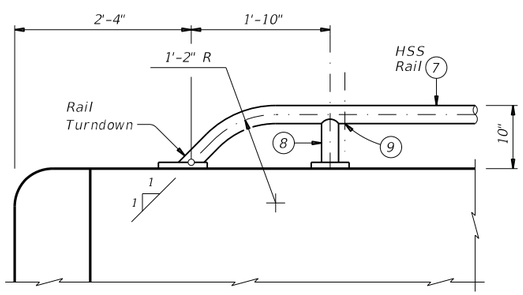


Note that at least two anchor points (as shown) are required for the Bridge Rail on the Abutment Wingwall. Longer Wingwalls may require more than two Rail anchorages.

## HSS RAIL TERMINAL DETAIL

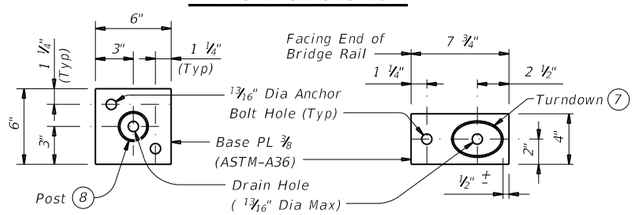


POST BASE PLATE PLAN

RAIL TURNDOWN BASE PLATE PLAN

## HSS RAIL DETAILS

SHEET 1 OF 3

Texas Department of Transportation

Bridge Division Standard

# COMBINATION RAIL

# TYPE C221

| FILE: r1std018-19.dgn | DN: TxDOT | CK: TxDOT | DW: JTR | CK: JMH |
|---|---|---|---|---|
| ©TxDOT September 2019 | CONT | SECT | JOB | HIGHWAY |
| REVISIONS | | | | AMR |
| | DIST | | COUNTY | SHEET NO. |
| | | | WILLIAMSON | 62 |

DISCLAIMER:
The use of this standard is governed by the "Texas Engineering Practice Act". No warranty of any kind is made by TxDOT for any purpose whatsoever. TxDOT assumes no responsibility for the conversion of this standard to other formats or for incorrect results or damages resulting from its use.

DATE: 8/5/2022 3:36:25 PM
FILE: G:\06852055_AMR Ph2\Design\Plan Set\3. Roadway\C221-1.dgn

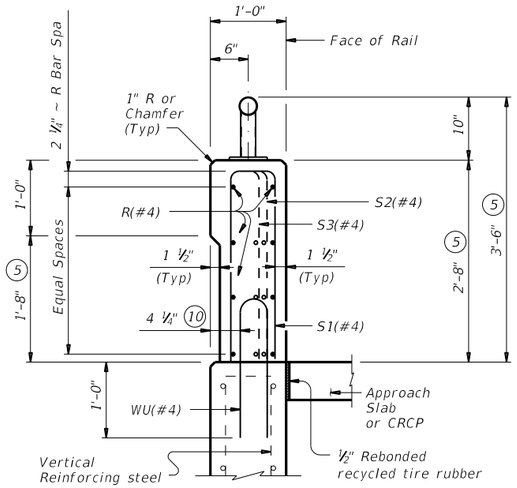


ON ABUTMENT WINGWALLS OR CIP RETAINING WALLS

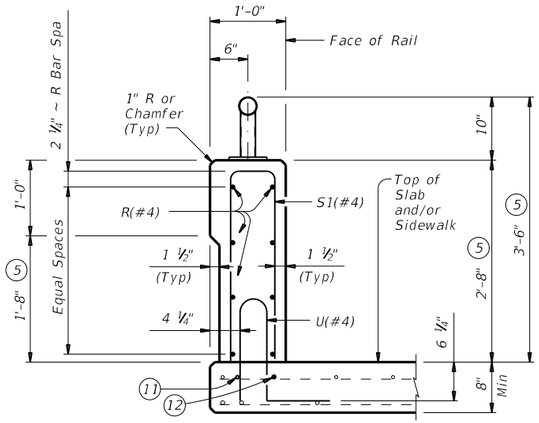


ON BRIDGE SLAB

## SECTIONS THRU RAIL WITHOUT RAISED SIDEWALK

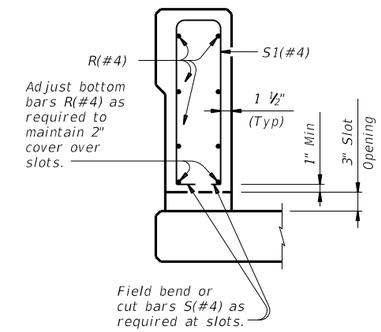


## SECTION THRU OPTIONAL SIDE SLOT DRAIN

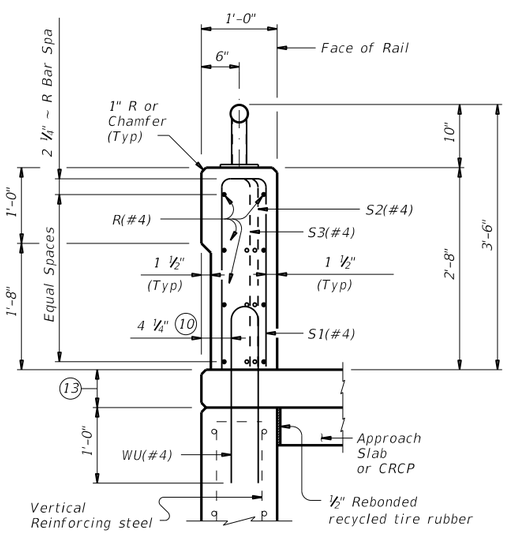


ON ABUTMENT WINGWALLS OR CIP RETAINING WALLS

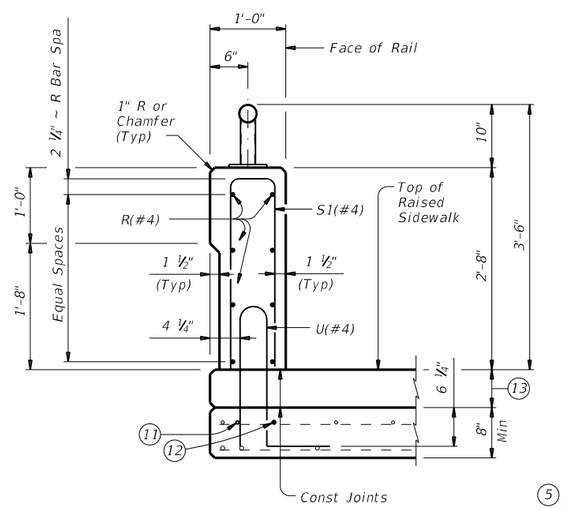


ON BRIDGE SLAB

## SECTIONS THRU RAIL WITH RAISED SIDEWALK

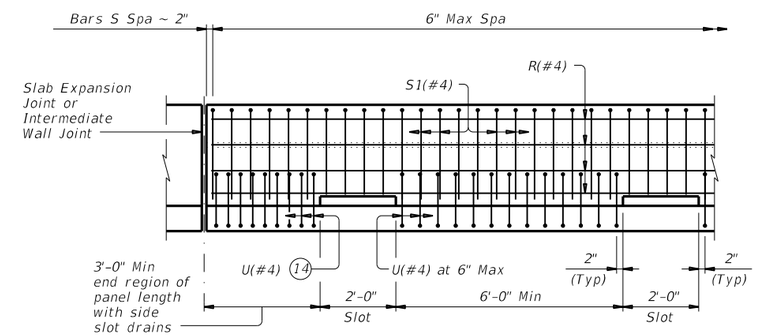


## OPTIONAL SIDE SLOT DRAIN DETAIL

Note: Side Slot Drains may be used where shown elsewhere on the plans or as directed by the Engineer. Drains should not be placed over railroad tracks, lower roadways, or sidewalks. When this rail is used as a separator between a roadway surface and a sidewalk surface, side drain slots will not be permitted.

5 Increase 2" for structures with overlay.

10 5 ¼" when vertical reinforcing has closer clear cover over horizontal reinforcing in abutment wingwalls or retaining walls on traffic side of wall.

11 As an aid in supporting reinforcement, additional longitudinal bars may be used in the slab with the approval of the Engineer. Such bars must be furnished at the Contractors expense.

12 Top longitudinal slab bar may be adjusted laterally 3" plus or minus to tie reinforcing.

13 Raised Sidewalk

14 Space U(#4) bars at 4" Max when end region of panel length is less than 6'-0" to side slot drain. Space U(#4) bars at 6" Max when end region of panel length is 6'-0" and greater to side slot drain.



Texas Department of Transportation — Bridge Division Standard

# COMBINATION RAIL

## TYPE C221

| FILE: r1std018-19.dgn | DN: TxDOT | CK: TxDOT | DW: JTR | CK: JMH |
|---|---|---|---|---|
| ©TxDOT September 2019 | CONT | SECT | JOB | HIGHWAY |
| REVISIONS | | | | AMR |
| | DIST | COUNTY | | SHEET NO. |
| | | WILLIAMSON | | 63 |

DISCLAIMER:
The use of this standard is governed by the "Texas Engineering Practice Act". No warranty of any kind is made by TxDOT for any purpose whatsoever. TxDOT assumes no responsibility for the conversion of this standard to other formats or for incorrect results or damages resulting from its use.

DATE: 8/5/2022 3:36:30 PM
FILE: G:\06852055_AMR Ph2\Design\Plan Set\3. Roadway\C221-2.dgn

## RAIL DATA FOR HORIZONTAL CURVES

| | RADIUS TO FACE OF RAIL | MAX CHORD LENGTH | CONSTRUCT OR FABRICATE |
|---|---|---|---|
| HSS Rail | Over 2800' | 29'-0" | Straight rail panels |
| | Over 1400' thru 2800' | 14'-6" | To required radius or to chords shown |
| | Over 700' thru 1400' | 7'-3" | |
| | Thru 700' | Zero | To required radius |

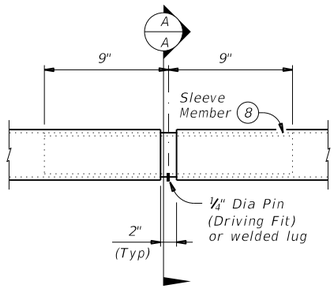


AT SPLICE OR EXP JTS

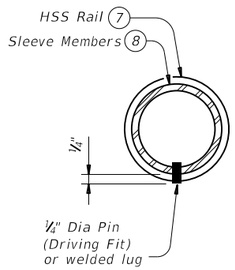


SECTION A-A

## PIPE SPLICE DETAILS

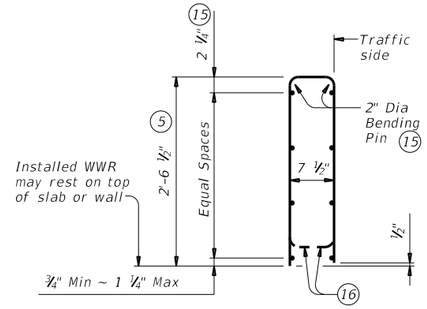


OPTIONAL WELDED WIRE REINFORCEMENT (WWR)

| DESCRIPTION | LONGITUDINAL WIRES | VERTICAL WIRES |
|---|---|---|
| Minimum (Cumulative Total) Wire Area | 1.067 Sq In. | 0.267 Sq In. per Ft |
| | No. of Wires | Spacing |
| Minimum | 8 | 4" |
| Maximum | 10 | 8" |
| Maximum Wire Size Differential | The smaller wire must have an area of 40% or more of the larger wire. | |

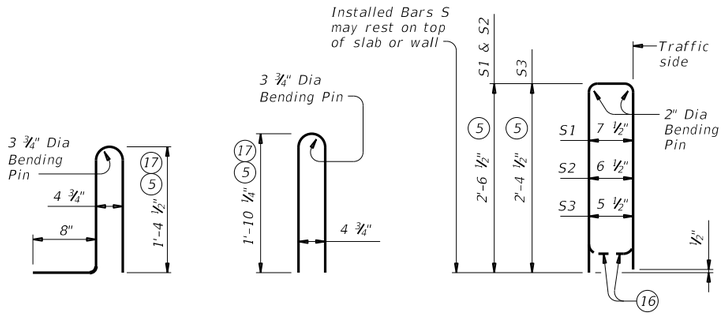


BARS U (#4) BARS WU (#4) BARS S (#4)

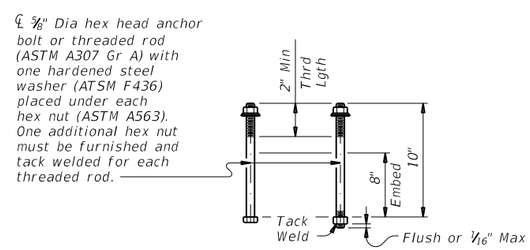


## CAST-IN-PLACE ANCHOR BOLT OPTIONS (18)

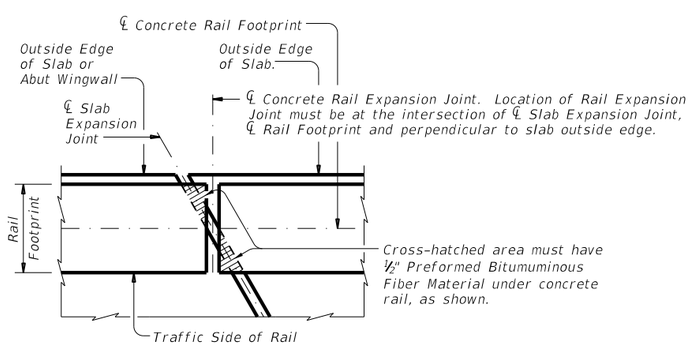


## PLAN OF RAIL AT EXPANSION JOINTS

Example showing Slab Expansion Joints without breakbacks.

(5) Increase 2" for structures with overlay.

(7) HSS 2.875 x 0.203

(8) HSS 2.375 x 0.154

(15) No longitudinal wires may be in top center of cage.

(16) Bend or cut as required to clear drain slots.

(17) For raised sidewalks, add sidewalk height to total bar height. Use sidewalk height at rail's location.

(18) See "Material Notes" for anchor bolt information.

### CONSTRUCTION NOTES:

This railing may be constructed by the slipform process when approved by the Engineer, with equipment approved by the Engineer and when adhesive anchor bolts are used. Slipforming parapet is not allowed if anchor bolts are cast with parapet wall. Provide sensor control for both line and grade. Tack welding to provide bracing for slipform operations is acceptable. Welding may be performed at a minimum spacing of 3 ft between the cage and the anchorage. It is permissible to weld to bars U, WU and S at any location on the cage. If increased bracing is needed, provide additional anchorage devices and weld in the upper two thirds of the cage. Paint welded areas on epoxy coated and/or galvanized reinforcing with an organic zinc rich paint in accordance with Item 445 "Galvanizing".

If rail is slipformed, apply an heavy epoxy bead 1" behind toe of traffic side of rail to concrete deck just prior to slip forming. Provide a ⅜" width x ¼" tall heavy epoxy bead with Type III, Class C or a Type V epoxy.

Test adhesive anchors in accordance with Item 450.3.3, "Tests". Test 3 anchors per 100 anchors installed. Perform corrective measures to provide adequate capacity if any of the tests do not meet the required test load. Repair damage from testing as directed.

At the Contractor's option anchor bolts may be cast with the parapet. See "Material Notes".

Face of rail, parapet must be plumb unless otherwise approved by the Engineer. HSS rail posts must be square to the top of parapet. Use epoxy mortar under post base plates if gaps larger than 1/16" exist.

Round or chamfer exposed edges of HSS rail and HSS rail posts to approximately 1/16" by grinding.

HSS rail sections must not include less than two posts, and no more than four (except at Abutments).

Chamfer all parapet exposed corners.

### MATERIAL NOTES:

Provide Class "C" concrete. Povide Class "C" (HPC) if required elsewhere.

Provide Grade 60 reinforcing steel.

Epoxy coat or galvanize all reinforcing steel if slab bars are epoxy coated or galvanized.

Provide ASTM A1085 or A500 Gr B or A53 Gr B for all HSS.

Galvanize all metal components of steel rail system. Apply additional coatings when shown elsewhere on the plans. When plans require paint over gavanizing, follow the requirements for painting galvanized steel in Item 445, "Galvanizing" and when field painting, Item 446, "Field Cleaning and Painting Steel". Sleeve members and anchor bolts must receive galvanization prior to installation and only field paint after installation unless directed otherwise by Engineer.

Deformed Welded Wire Reinforcement (WWR) (ASTM A1064) of equal size and spacing may be substituted for Bars U and WU unless noted otherwise. Deformed WWR (ASTM 1064) may be substituted for Bars R and S, as shown. Combinations of reinforcing steel and WWR or configurations of WWR other that shown are permitted if conditions in the table are satisfied. Provide the same laps as required for reinforcing bars.

Anchor bolts must be ⅝" Dia ASTM A307 Gr A fully threaded rods with one hex nut and one hardened steel washer (ASTM F436) each. Nuts must conform to ASTM A563 requirements. Embed fully threaded rods into parapet wall with a Type III, Class C, D, E, or F anchor adhesive. Minimum adhesive anchor embedment depth is 3". Anchor adhesive chosen must be able to achieve a nominal bond strength in tension of a single anchor, Na, of 5 kips (edge distance must be accounted for). Submit signed and sealed calculations or the manufacturer's published literature showing the proposed anchor adhesive's ability to develop this load to the Engineer for approval prior to use. Anchor installation, including hole size, drilling, and clean out, must be in accordance with Item 450, "Railing".

Optional cast-in-place anchor bolts must be ⅝" Dia ASTM A307 Gr A bolts (or threaded rods with one tack welded hex nut each) with one hex nut and one hardened steel washer (ASTM F436) at each bolt. Nuts must conform to ASTM A563 requirements.

Provide bar laps, where required, as follows: Uncoated or galvanized ~ #4 = 1'-7"
Epoxy coated ~ #4 = 2'-5"

### GENERAL NOTES:

This rail has been evaluated and accepted to be of equal strength to railings with like geometry, which have been crash tested to meet MASH TL-3 criteria. This rail can be used for speeds of 50 mph and greater when a TL-3 rated guard fence transition is used. When a TL-2 rated guard fence transition is used, this rail can only be used for speeds of 45 mph and less.

Do not use this railing on bridges with expansion joints providing more than 5" movement.

Rail anchorage details shown on this standard may require modification for select structure types. See appropriate details elsewhere in plans for these modifications.

Submit erection drawings showing panel lengths, rail post spacing, and anchor bolt setting to the Engineer for approval.

Average weight of railing with no overlay: 380 plf (total)
370 plf (Conc)
10 plf (Steel)

Cover dimensions are clear dimensions, unless noted otherwise.
Reinforcing bar dimensions shown are out-to-out of bar.



Texas Department of Transportation — Bridge Division Standard

# COMBINATION RAIL

# TYPE C221

| FILE: r1std018-19.dgn | DN: TxDOT | CK: TxDOT | DW: JTR | CK: JMH |
|---|---|---|---|---|
| ©TxDOT September 2019 | CONT | SECT | JOB | HIGHWAY |
| REVISIONS | | | | AMR |
| | DIST | | COUNTY | SHEET NO. |
| | | | WILLIAMSON | 64 |

DISCLAIMER:
The use of this standard is governed by the "Texas Engineering Practice Act". No warranty of any kind is made by TxDOT for any purpose whatsoever. TxDOT assumes no responsibility for the conversion of this standard to other formats or for incorrect results or damages resulting from its use.

DATE: 8/5/2022 3:36:36 PM
FILE: G:\06853205_AMR Ph2\Design\Plan Set\3. Roadway\C221-3.dgn

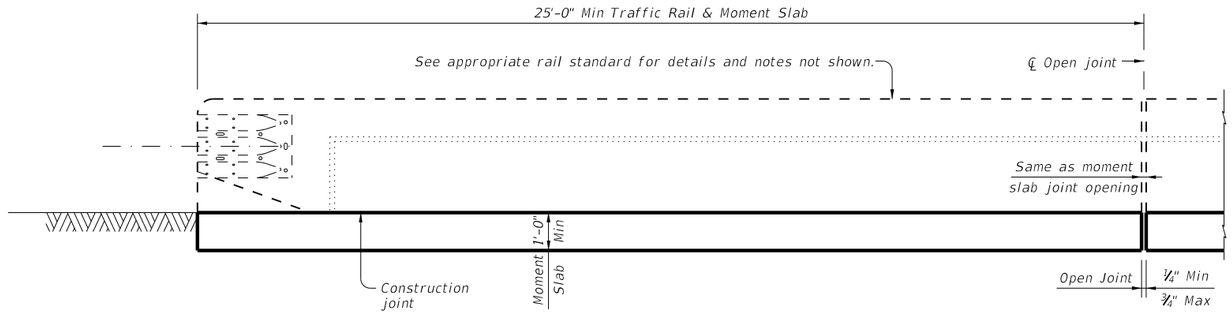


## ROADWAY ELEVATION OF TRAFFIC RAIL ON MOMENT SLAB (TRF-MS)

(Showing SSTR rail other rails are similar. Reinforcing not shown for clarity.)

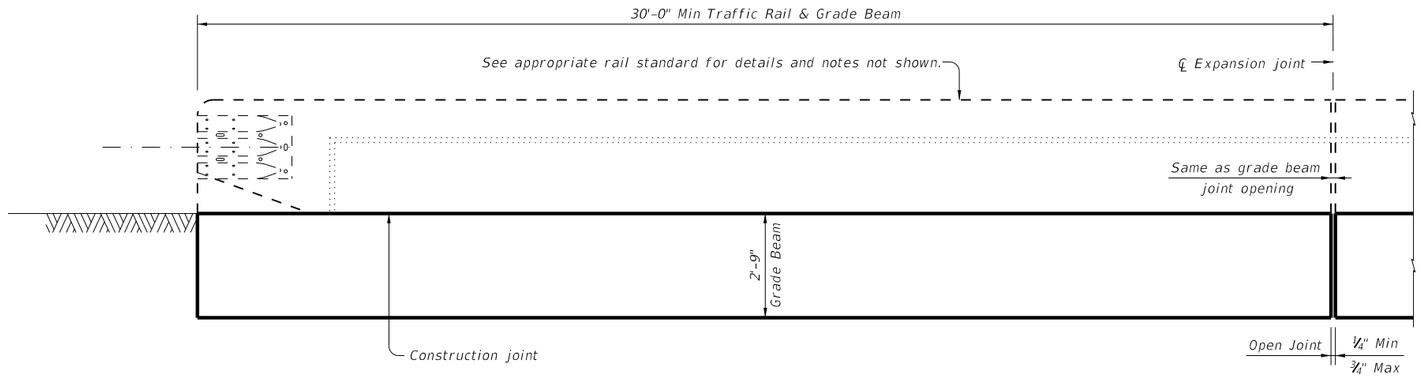


## ROADWAY ELEVATION OF TRAFFIC RAIL ON GRADE BEAM (TRF-GB)

(Showing SSTR rail other rails are similar. Reinforcing not shown for clarity.)

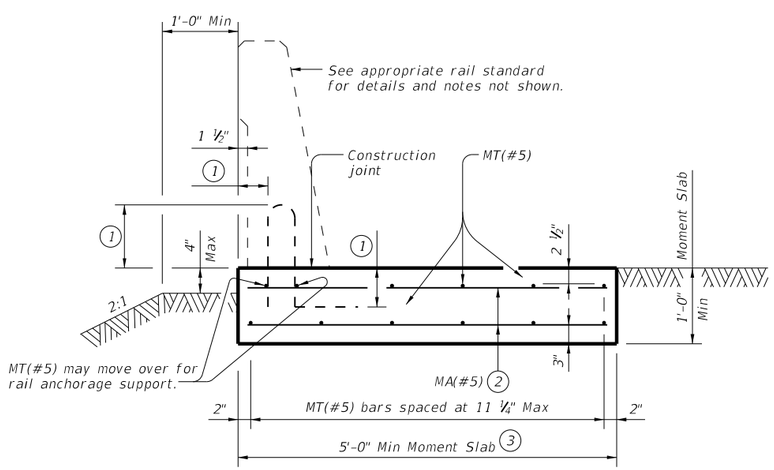


## SECTION OF TRAFFIC RAIL ON MOMENT SLAB (TRF-MS)

(Showing SSTR rail other rails are similar.)

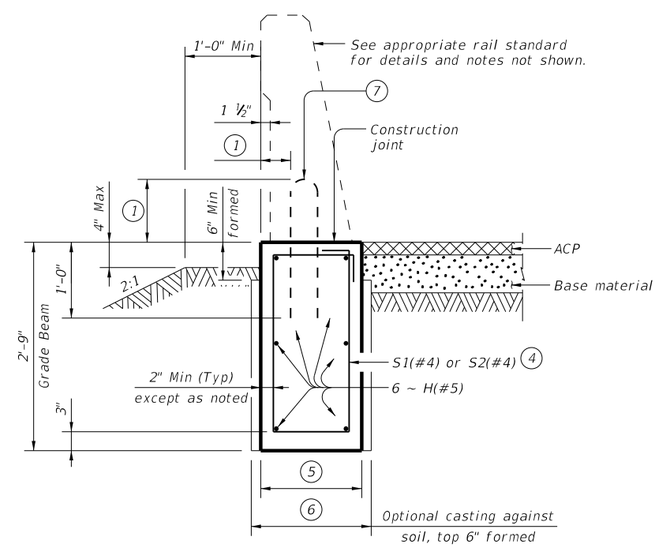


## SECTION OF TRAFFIC RAIL ON GRADE BEAM (TRF-GB)

(Showing SSTR rail other rails are similar.)

1. See applicable bridge rail standard.
2. MA(#5) space longitudinally along moment slab at 12" Max. (Spaced 2 ½" longitudinally from outside edge of moment slab).
3. Approximate moment slab concrete = 0.19 CY/LF and reinforcement = 22.4 LB/LF.
4. S1(#4) or S2(#4) spaced longitudinally along grade beam at 8" Max. (Spaced 2 ½" longitudinally from outside edge of grade beam).
5. Use bar S1(#4) with 1'-4" grade beam width and bridge rail types: All rails except for T224, C412, T66, C66, T80HT and T80SS.
   Approximate grade beam concrete = 0.14 CY/LF and reinforcement = 13.8 LB/LF.

   Use bar S2(#4) with 1'-7" grade beam width and bridge rail types: T66 and C66.
   Approximate grade beam concrete = 0.16 CY/LF and reinforcement = 14.2 LB/LF.
6. 1'-6" for bridge rail types: All rails except for T224, C412, T66, C66, T80HT and T80SS.

   1'-9" bridge rail types: T66 and C66.
7. Modify reinforcing on standard bridge rail anchorage if necessary by extending rail anchorage 12" Min, vertically into traffic rail

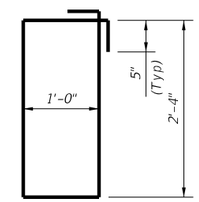


BARS S1(#4)

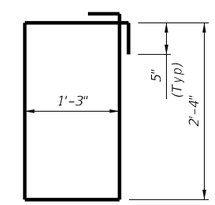


BARS S2(#4)

### CONSTRUCTION NOTES:

Align moment slab (TRF-MS) or grade beam (TRF-GB) open joints with rail open joints maintaining no less than minimum rail length. Provide moment slab (TRF-MS) or grade beam (TRF-GB) with open joints at no greater than 100' spacing unless otherwise shown on the plans or approved by the Engineer.

### MATERIAL NOTES:

Provide Class "C" concrete. Provide Class "C" (HPC) if required elsewhere.

Provide Grade 60 reinforcing steel.

Epoxy coat or galvanize all reinforcing steel if required elsewhere.

Deformed Welded Wire Reinforcement (WWR) (ASTM A1064) of equal size and spacing may be substituted for bars S1(#4), S2(#4) and H(#5) unless noted otherwise. Provide the same laps as required for reinforcing bars.

Provide bar laps, where required, as follows:

Uncoated or galvanized ~ #5 = 2'-4"
Epoxy coated ~ #5 = 3'-6"

### GENERAL NOTES:

Use of these details will result in a moment slab (TRF-MS) or grade beam (TRF-GB) foundation that is acceptable for traffic rails which are MASH TL-2, TL-3, or TL-4 compliant.

See elsewhere in the plans for selected options between moment slab (TRF-MS) and/or grade beam (TRF-GB).

The foundation design resistance is based on the current AASHTO bridge railing requirements with the assumption of fair to good soil support conditions. Poor soil conditions will require suitably deeper and/or wider foundations.

See appropriate rail standard for details and notes not shown.

This detail is intended for use as a guide to unusual railing anchorage situations but may be included in the plans, modified as necessary to apply to specific installations required on the project.

Payment for moment slab (TRF-MS) and/or grade beam (TRF-GB) will be by Class "C" concrete or Class "C" (HPC) concrete for rail foundations.

The associated bridge railing will be paid for by the linear foot which includes the concrete and reinforcement.

Excavation will be subsidiary to other Items.

Cover dimensions are clear dimensions, unless noted otherwise.
Reinforcing bar dimensions shown are out-to-out of bar.

Texas Department of Transportation — Bridge Division Standard

# TRAFFIC RAIL FOUNDATIONS

## FOR MASH TL-2, TL-3 & TL-4 BRIDGE RAILS

## TRF

| FILE: rlstd027-20.dgn | DN: TxDOT | CK: TAR | DW: JTR | CK: TAR |
|---|---|---|---|---|
| ©TxDOT September 2019 | CONT | SECT | JOB | HIGHWAY |
| REVISIONS 07-20: Added moment slab with rail foundation lengths. | | | | AMR |
| | DIST | COUNTY | | SHEET NO. |
| | | WILLIAMSON | | 65 |

DISCLAIMER:
The use of this standard is governed by the "Texas Engineering Practice Act". No warranty of any kind is made by TxDOT for any purpose whatsoever. TxDOT assumes no responsibility for the conversion of this standard to other formats or for incorrect results or damages resulting from its use.

DATE: 8/5/2022 3:36:44 PM
FILE: G:\06853055_AMR Ph2\Design\Plan Set\3. Roadway\TRF.dgn

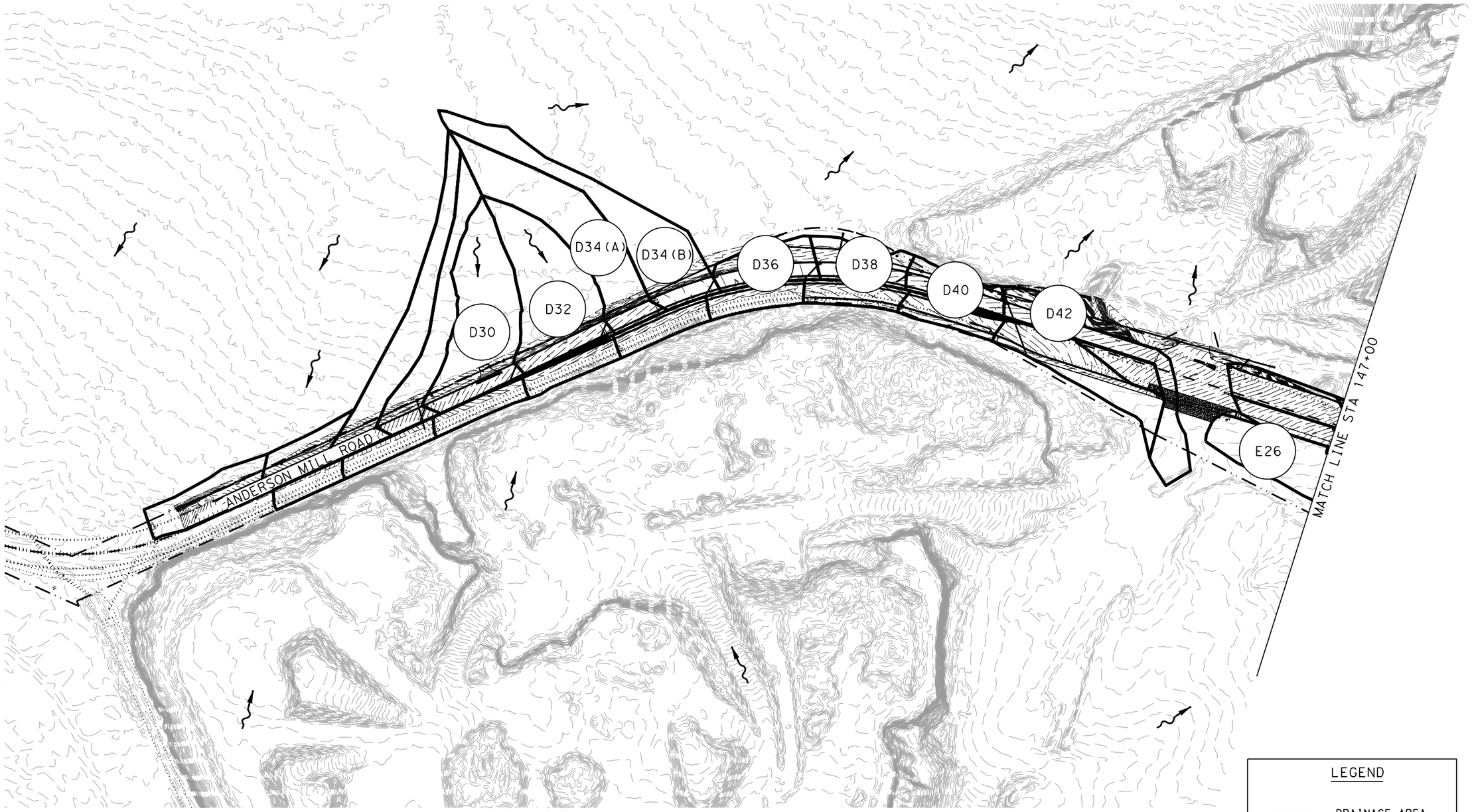


LEGEND

DRAINAGE AREA BOUNDARY

XX DRAINAGE AREA ID

| NO | DATE | ISSUES AND REVISIONS |
|---|---|---|

STATE OF TEXAS
AUSTIN S. HELTON
124922
LICENSED
PROFESSIONAL ENGINEER

8/5/2022

Kimley»Horn
F-928
10814 JOLLYVILLE ROAD
BLDG. 4, STE 200
AUSTIN, TX 78759
PHONE: 512-418-1771

# DRAINAGE AREA MAP

SHEET 1 OF 2
ANDERSON MILL ROAD PHASE 2

CEDAR PARK



FILENAME: AMR*DRG*MAP*01.dgn
PLOTTED: 8/5/2022 3:39:13 PM

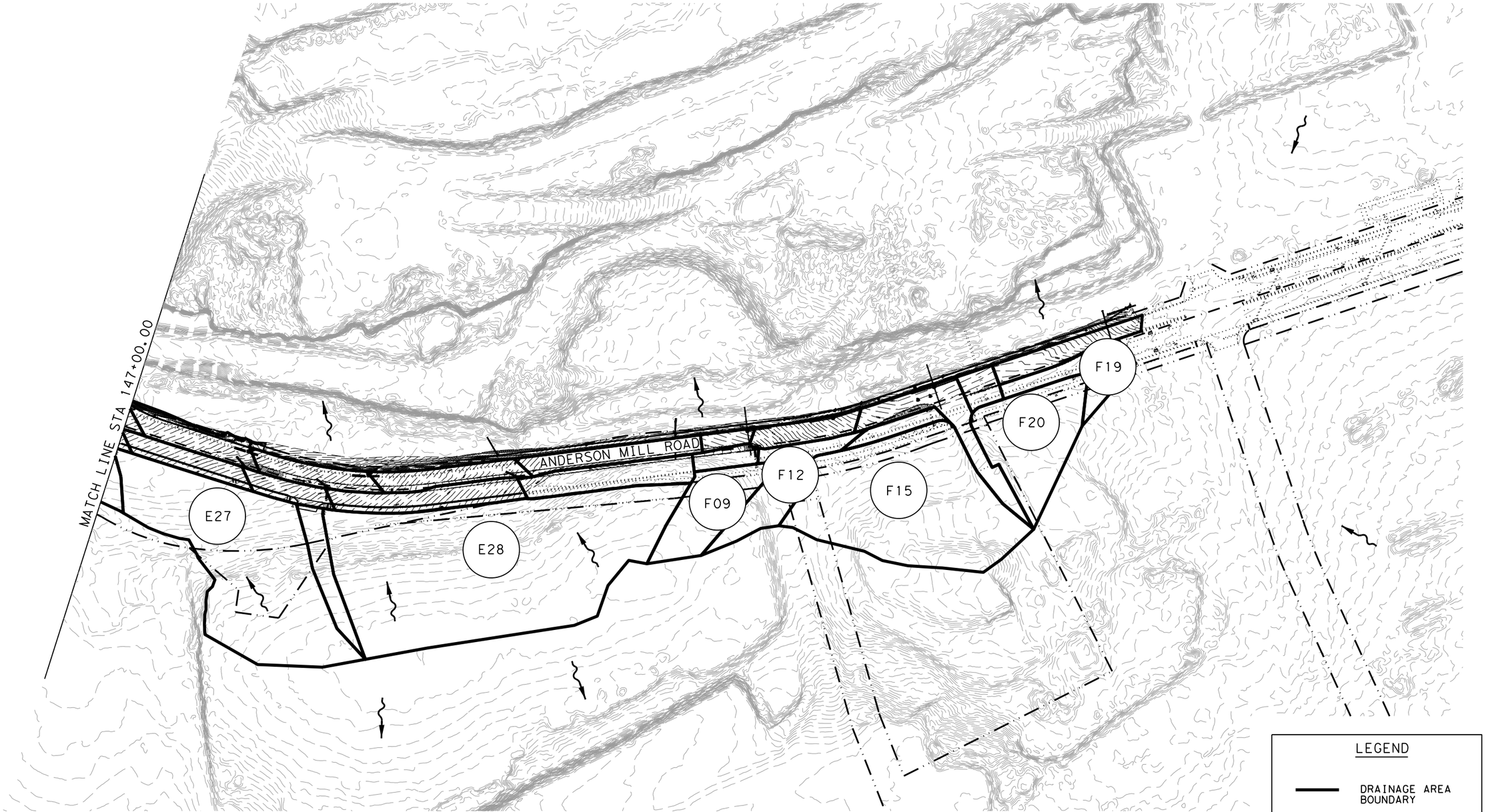


LEGEND

DRAINAGE AREA BOUNDARY

XX DRAINAGE AREA ID

| NO | DATE | ISSUES AND REVISIONS |
|---|---|---|
| | | |

STATE OF TEXAS
AUSTIN S. HELTON
124922
LICENSED
PROFESSIONAL ENGINEER

8/5/2022

Kimley»Horn
F-928
10814 JOLLYVILLE ROAD
BLDG. 4, STE 200
AUSTIN, TX 78759
PHONE: 512-418-1771

# DRAINAGE AREA MAP

SHEET 2 OF 2

ANDERSON MILL ROAD PHASE 2

CEDAR PARK



FILENAME: AMR*DRG*MAP*02.dgn
PLOTTED: 8/5/2022 3:39:50 PM

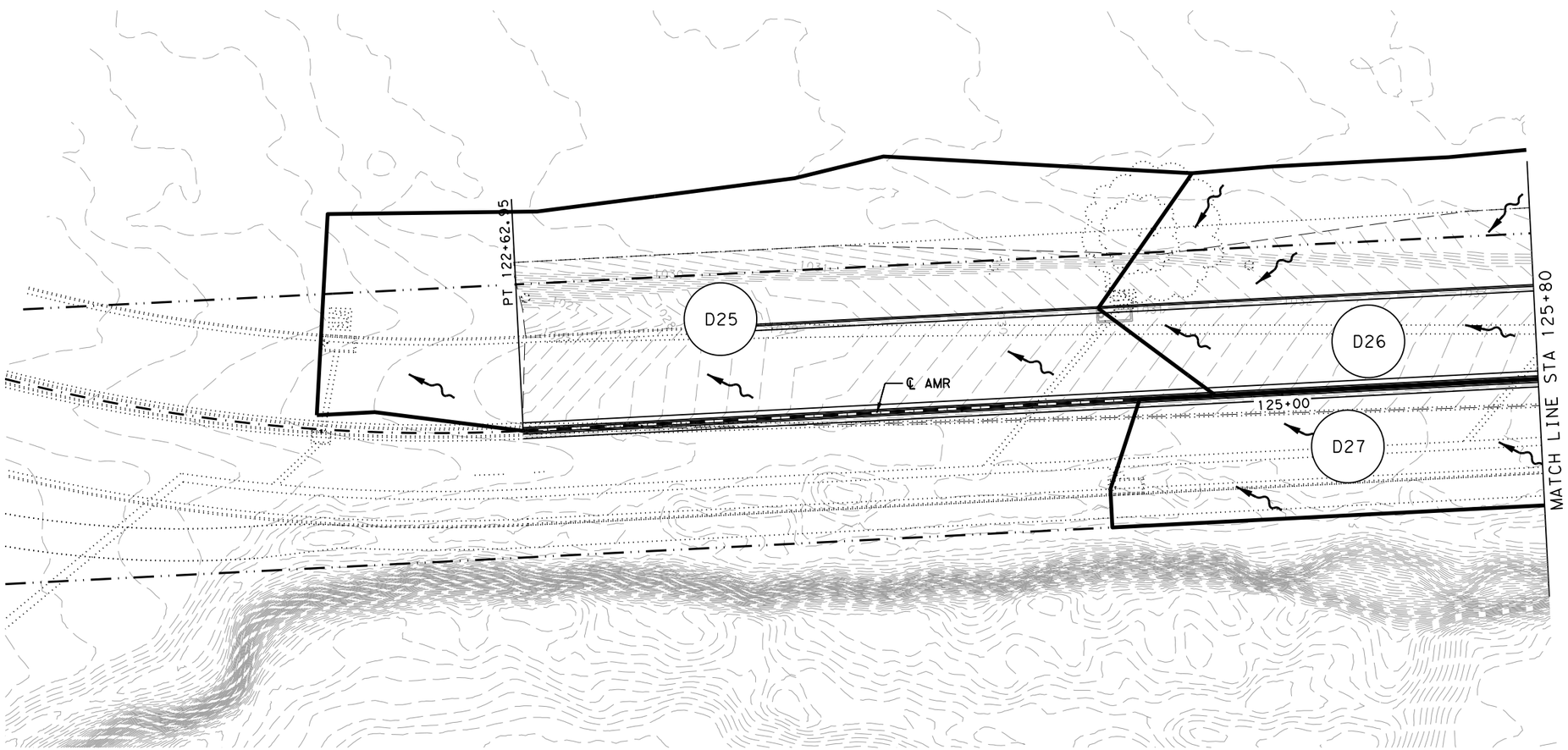


0 20 40
SCALE: 1" = 40'

LEGEND

DRAINAGE AREA BOUNDARY

XX DRAINAGE AREA ID

| NO | DATE | ISSUES AND REVISIONS |
|---|---|---|
| | | |

STATE OF TEXAS
AUSTIN S. HELTON
124922
LICENSED
PROFESSIONAL ENGINEER

8/5/2022

Kimley»Horn
F-928
10814 JOLLYVILLE ROAD
BLDG. 4, STE 200
AUSTIN, TX 78759
PHONE: 512-418-1771

# DRAINAGE AREAS

SHEET 1 OF 10
ANDERSON MILL ROAD PHASE 2

CEDAR PARK



FILENAME: AMR*DRG*01.dgn
PLOTTED: 8/5/2022 3:40:11 PM

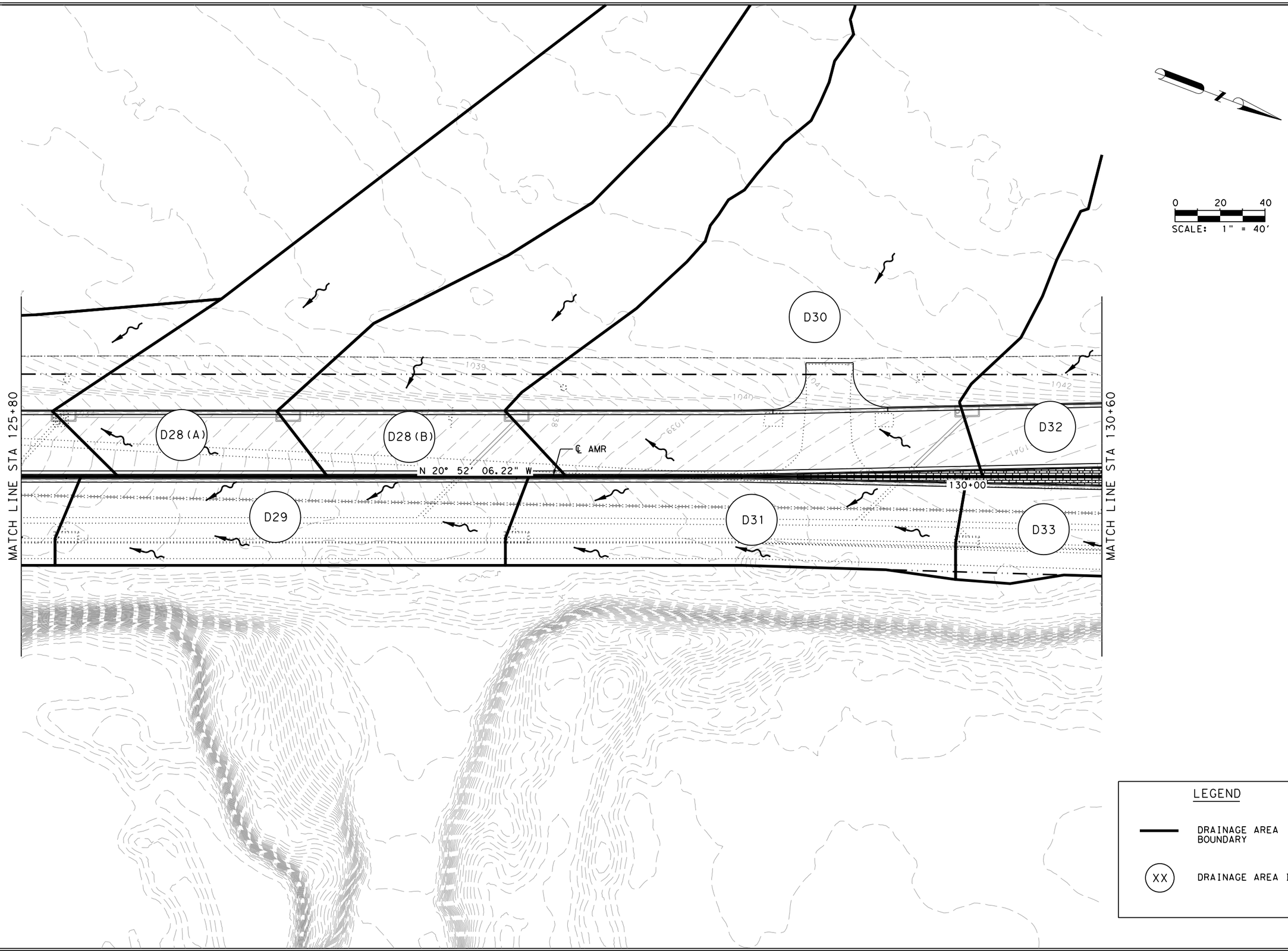


| NO | DATE | ISSUES AND REVISIONS |
|---|---|---|

STATE OF TEXAS
AUSTIN S. HELTON
124922
LICENSED
PROFESSIONAL ENGINEER

8/5/2022

Kimley»Horn
F-928
10814 JOLLYVILLE ROAD
BLDG. 4, STE 200
AUSTIN, TX 78759
PHONE: 512-418-1771

# DRAINAGE AREAS

SHEET 2 OF 10
ANDERSON MILL ROAD PHASE 2

CEDAR PARK



FILENAME: AMR-DRG-02.dgn
PLOTTED: 8/5/2022 3:40:24 PM

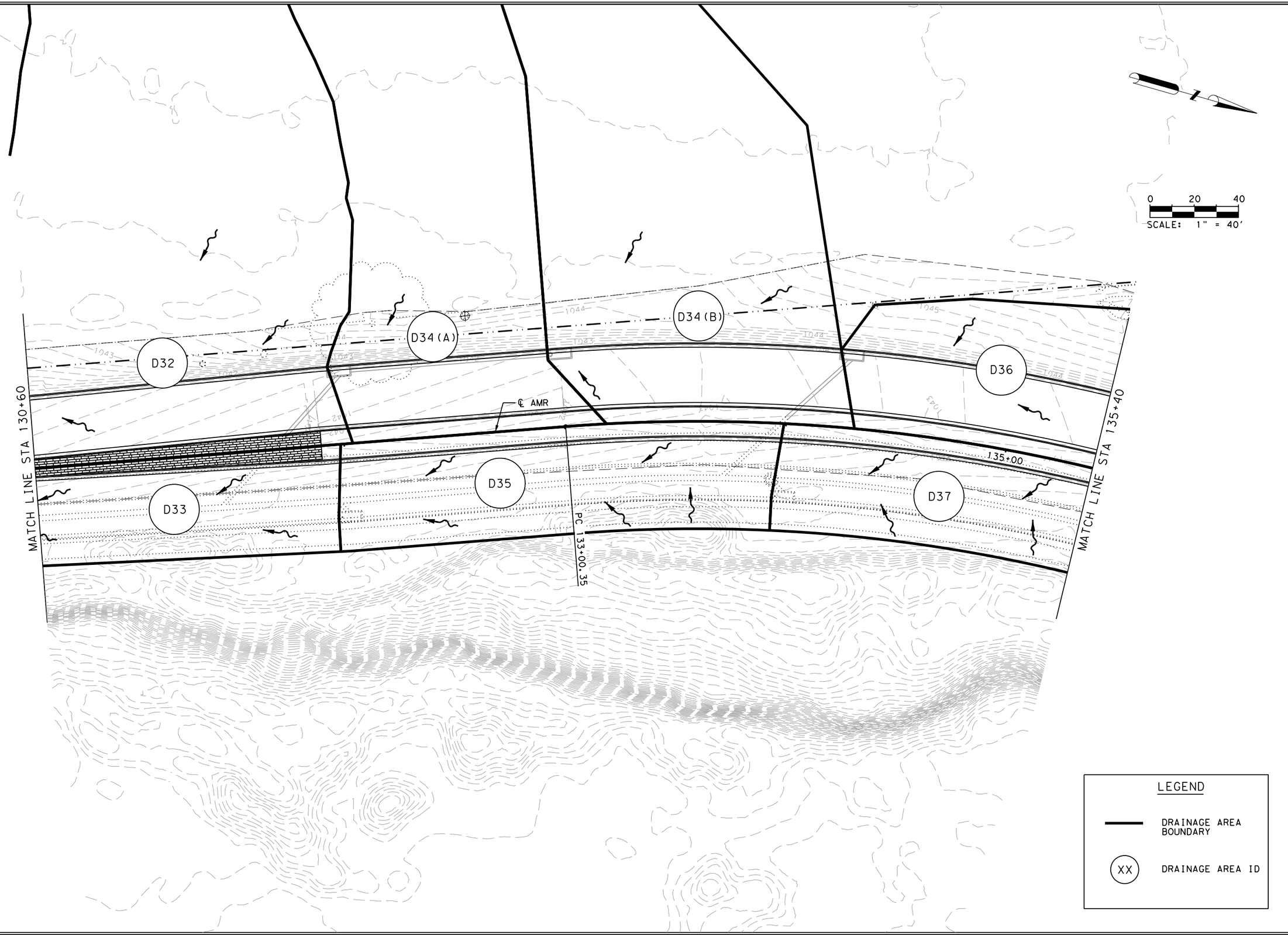


| NO | DATE | ISSUES AND REVISIONS |
|---|---|---|

STATE OF TEXAS
AUSTIN S. HELTON
124922
LICENSED
PROFESSIONAL ENGINEER

8/5/2022


Kimley»Horn
F-928
10814 JOLLYVILLE ROAD
BLDG. 4, STE 200
AUSTIN, TX 78759
PHONE: 512-418-1771


# DRAINAGE AREAS

SHEET 3 OF 10
ANDERSON MILL ROAD PHASE 2

CEDAR PARK



FILENAME: AMR-DRG-03.dgn
PLOTTED: 8/5/2022 3:40:31 PM

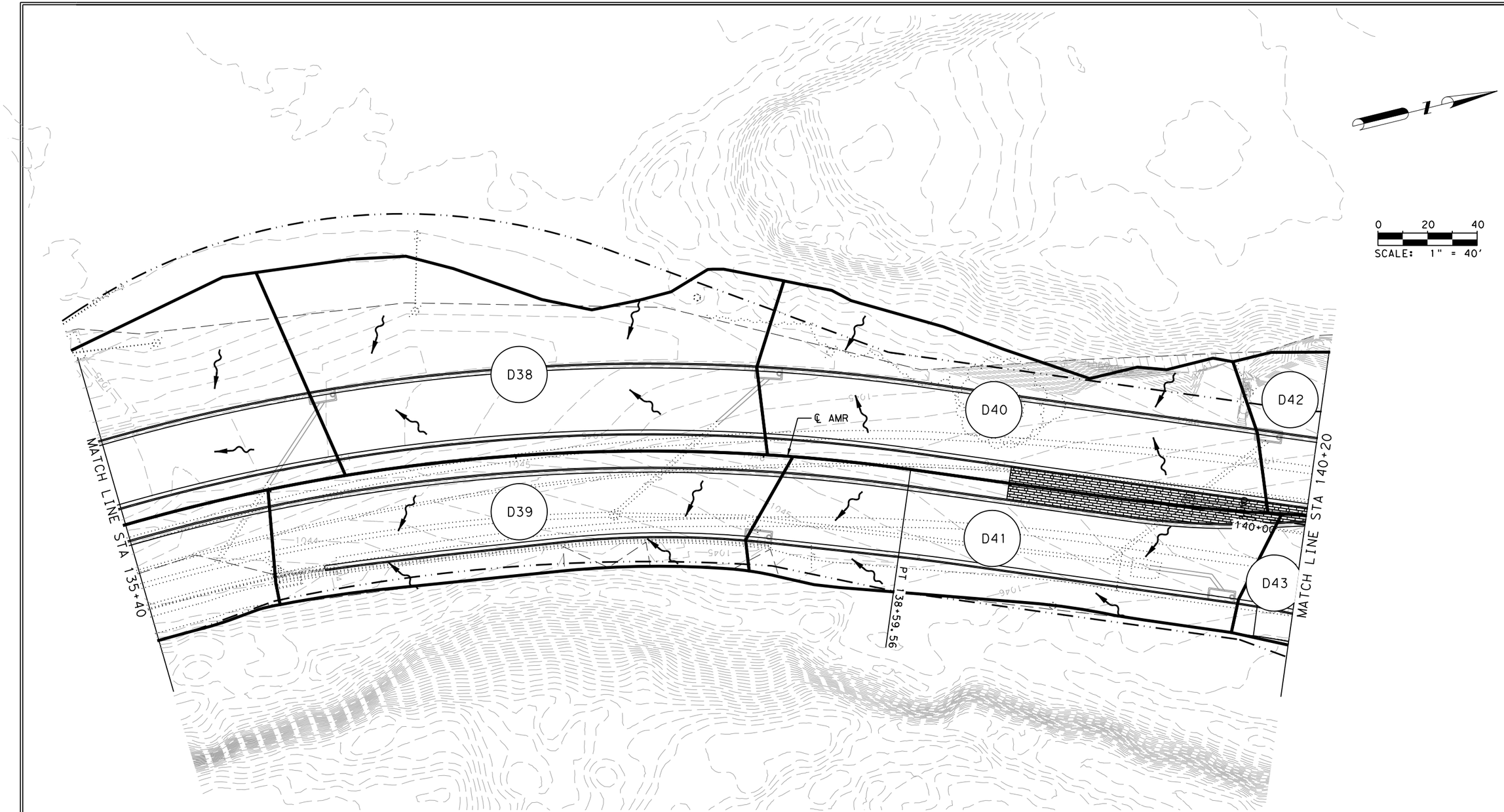


LEGEND

DRAINAGE AREA BOUNDARY

XX DRAINAGE AREA ID

| NO | DATE | ISSUES AND REVISIONS |
|---|---|---|

STATE OF TEXAS
AUSTIN S. HELTON
124922
LICENSED
PROFESSIONAL ENGINEER

8/5/2022

Kimley»Horn
F-928
10814 JOLLYVILLE ROAD
BLDG. 4, STE 200
AUSTIN, TX 78759
PHONE: 512-418-1771

# DRAINAGE AREAS

SHEET 4 OF 10
ANDERSON MILL ROAD PHASE 2

CEDAR PARK



FILENAME: AMR-DRG-04.dgn
PLOTTED: 8/5/2022 3:42:15 PM

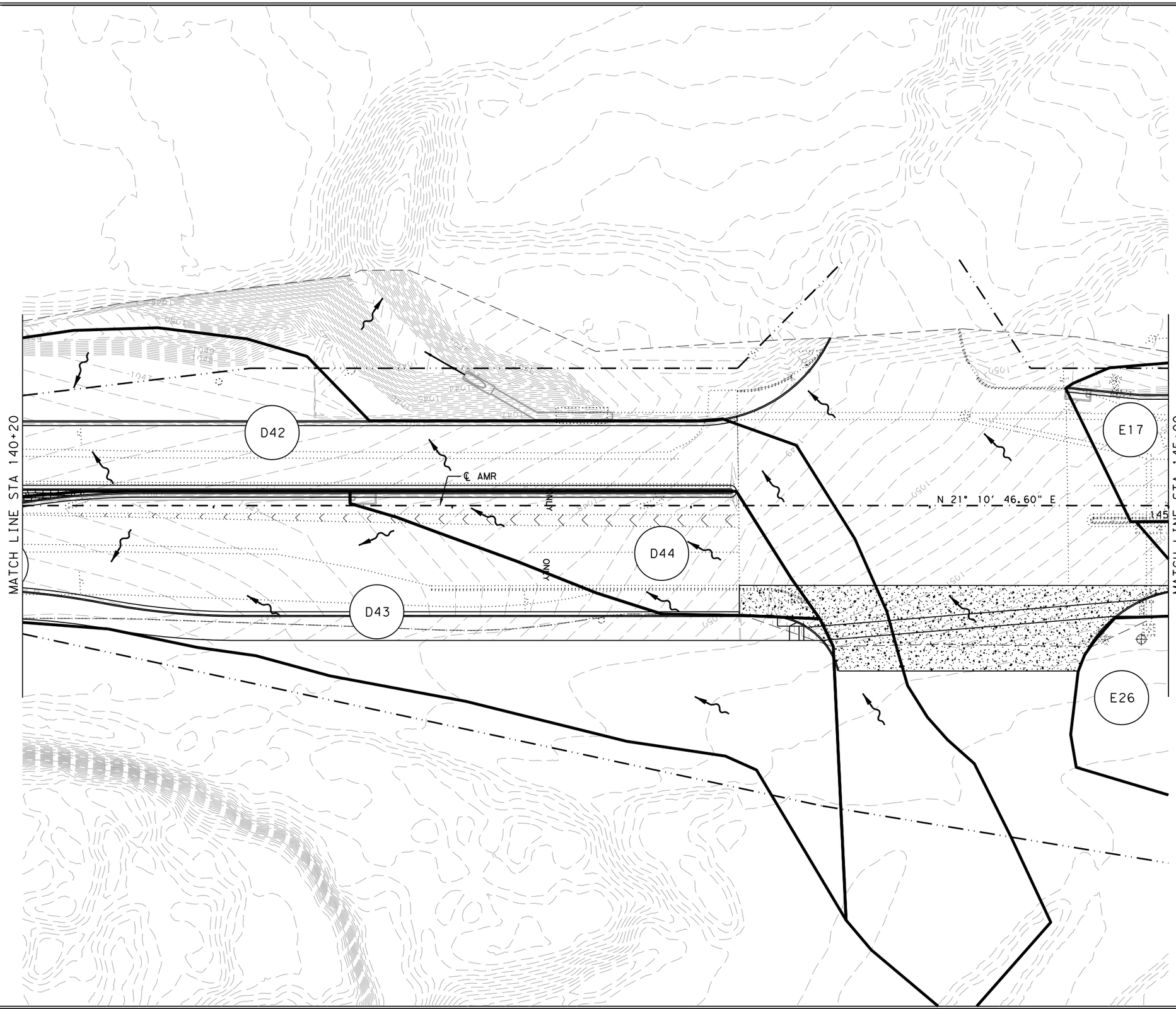


| NO | DATE | ISSUES AND REVISIONS |
|---|---|---|
| | | |

STATE OF TEXAS
AUSTIN S. HELTON
124922
LICENSED
PROFESSIONAL ENGINEER

8/5/2022

Kimley»Horn
F-928
10814 JOLLYVILLE ROAD
BLDG. 4, STE 200
AUSTIN, TX 78759
PHONE: 512-418-1771

# DRAINAGE AREAS

SHEET 5 OF 10
ANDERSON MILL ROAD PHASE 2

CEDAR PARK



FILENAME: AMR-DRG-05.dgn
PLOTTED: 8/5/2022 3:42:43 PM

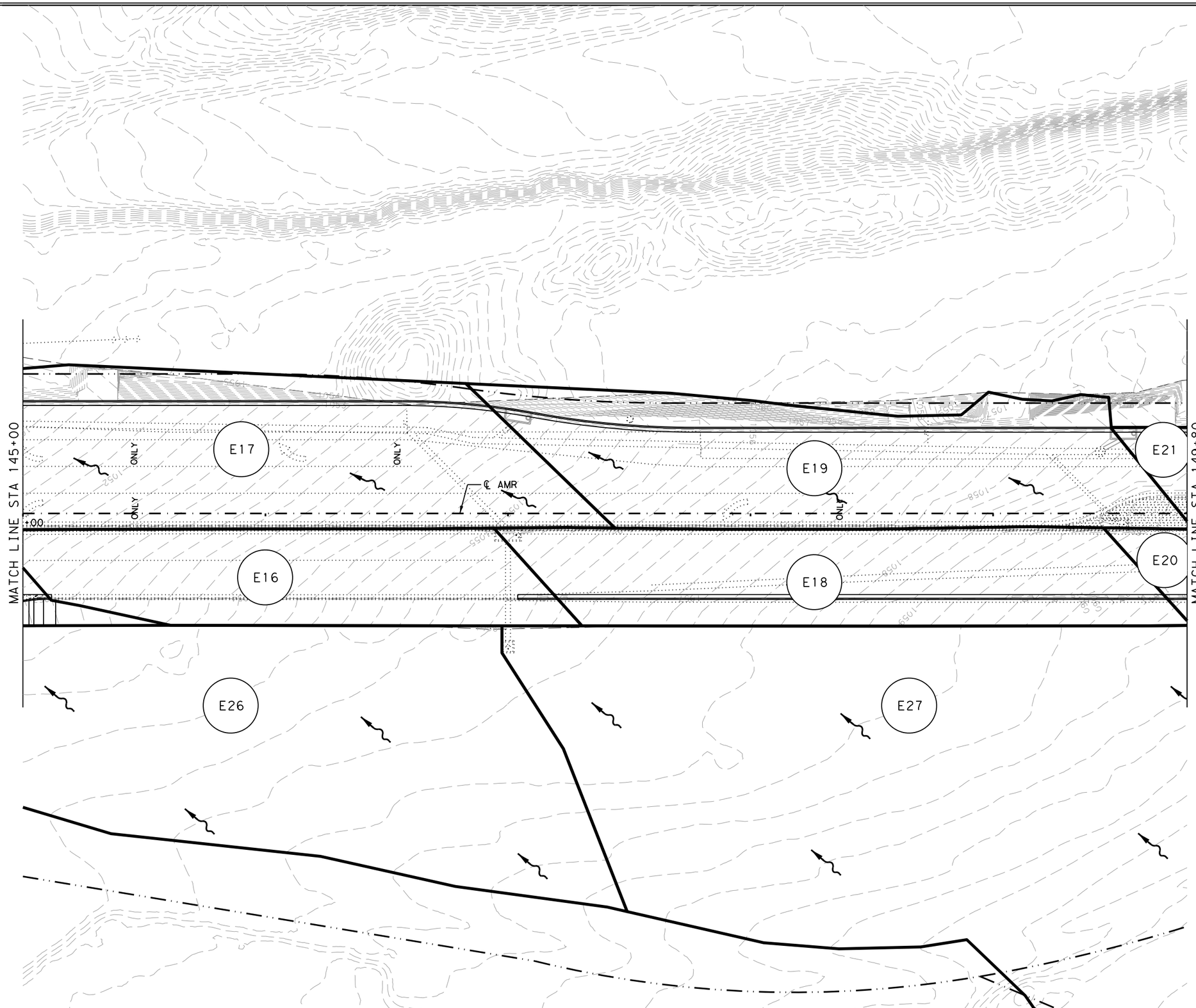


0 20 40
SCALE: 1" = 40'

LEGEND

DRAINAGE AREA BOUNDARY

XX DRAINAGE AREA ID

| NO | DATE | ISSUES AND REVISIONS |
|---|---|---|
| | | |

STATE OF TEXAS
AUSTIN S. HELTON
124922
LICENSED
PROFESSIONAL ENGINEER
8/5/2022

Kimley»Horn
F-928
10814 JOLLYVILLE ROAD
BLDG. 4, STE 200
AUSTIN, TX 78759
PHONE: 512-418-1771

# DRAINAGE AREAS

SHEET 6 OF 10
ANDERSON MILL ROAD PHASE 2

CEDAR PARK



FILENAME: AMR*DRG*06.dgn
PLOTTED: 8/5/2022 3:43:10 PM

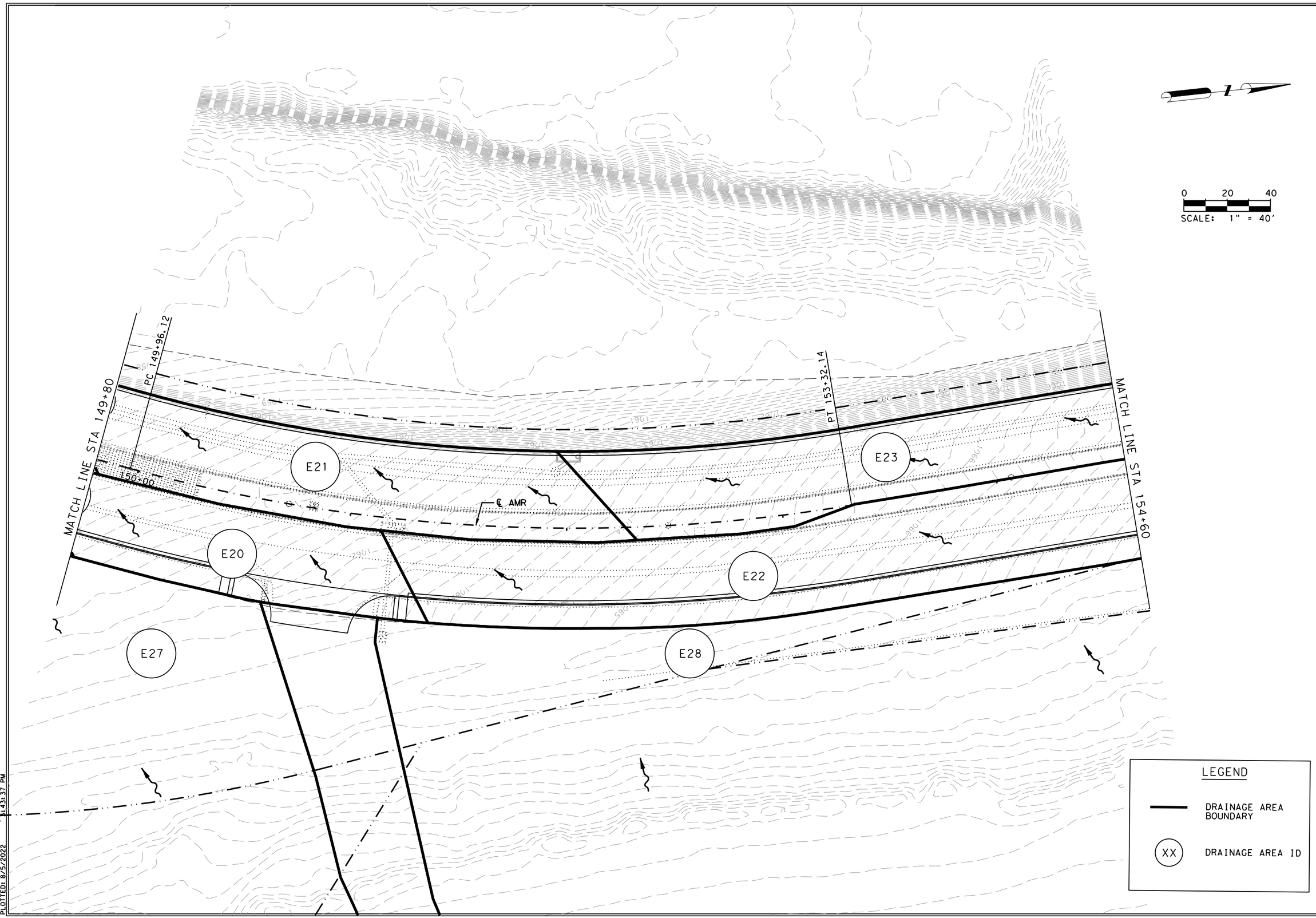


| NO | DATE | ISSUES AND REVISIONS |
|---|---|---|
| | | |

STATE OF TEXAS
AUSTIN S. HELTON
124922
LICENSED
PROFESSIONAL ENGINEER

8/5/2022

Kimley»Horn
F-928
10814 JOLLYVILLE ROAD
BLDG. 4, STE 200
AUSTIN, TX 78759
PHONE: 512-418-1771

# DRAINAGE AREAS

SHEET 7 OF 10
ANDERSON MILL ROAD PHASE 2

CEDAR PARK



FILENAME: AMR-DRG-07.dgn
PLOTTED: 8/5/2022 3:43:37 PM

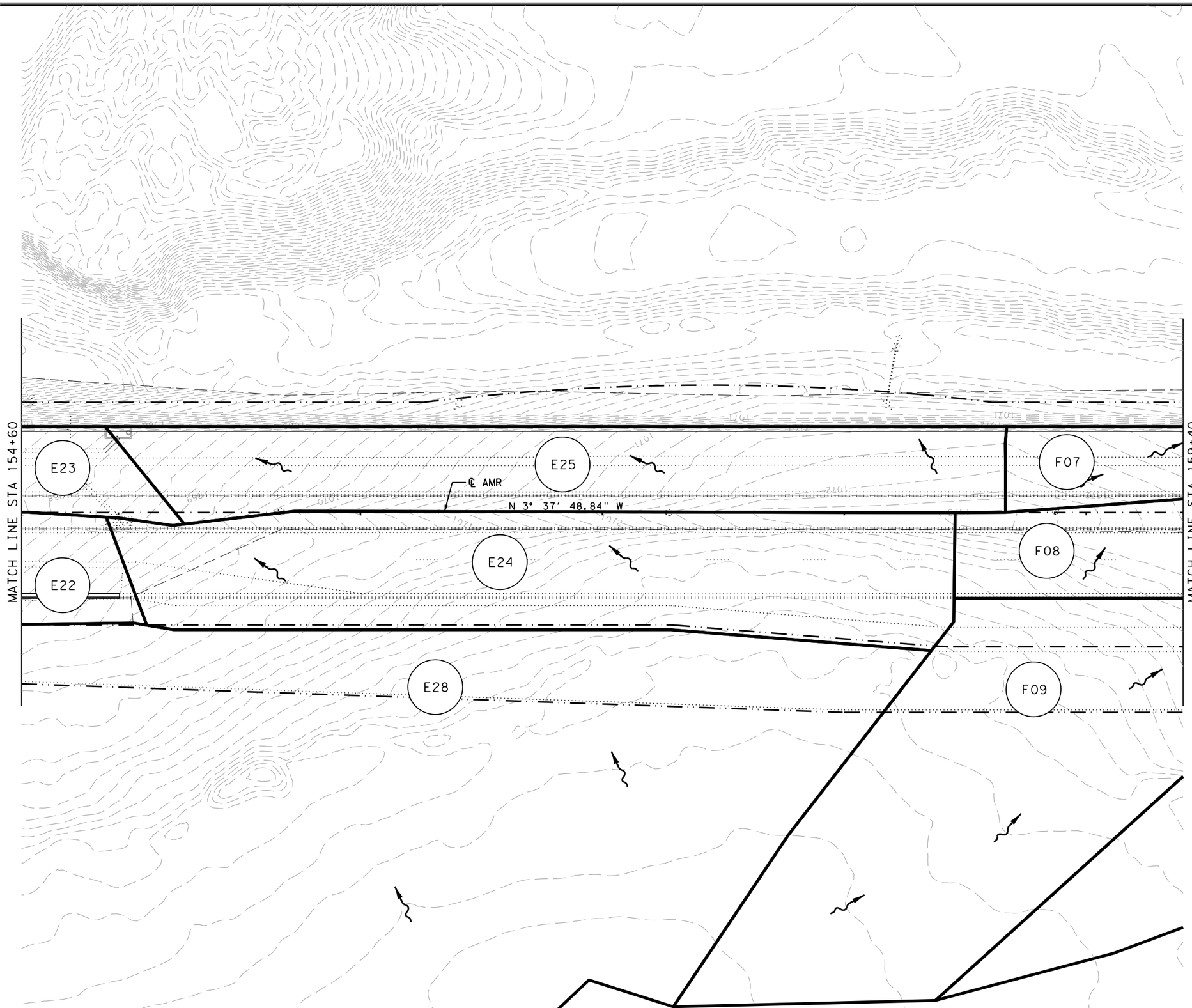


| NO | DATE | ISSUES AND REVISIONS |
|---|---|---|

STATE OF TEXAS
AUSTIN S. HELTON
124922
LICENSED
PROFESSIONAL ENGINEER

8/5/2022

Kimley»Horn
F-928
10814 JOLLYVILLE ROAD
BLDG. 4, STE 200
AUSTIN, TX 78759
PHONE: 512-418-1771

# DRAINAGE AREAS

SHEET 8 OF 10
ANDERSON MILL ROAD PHASE 2

CEDAR PARK



FILENAME: AMR-DRG-08.dgn
PLOTTED: 8/5/2022 3:44:05 PM

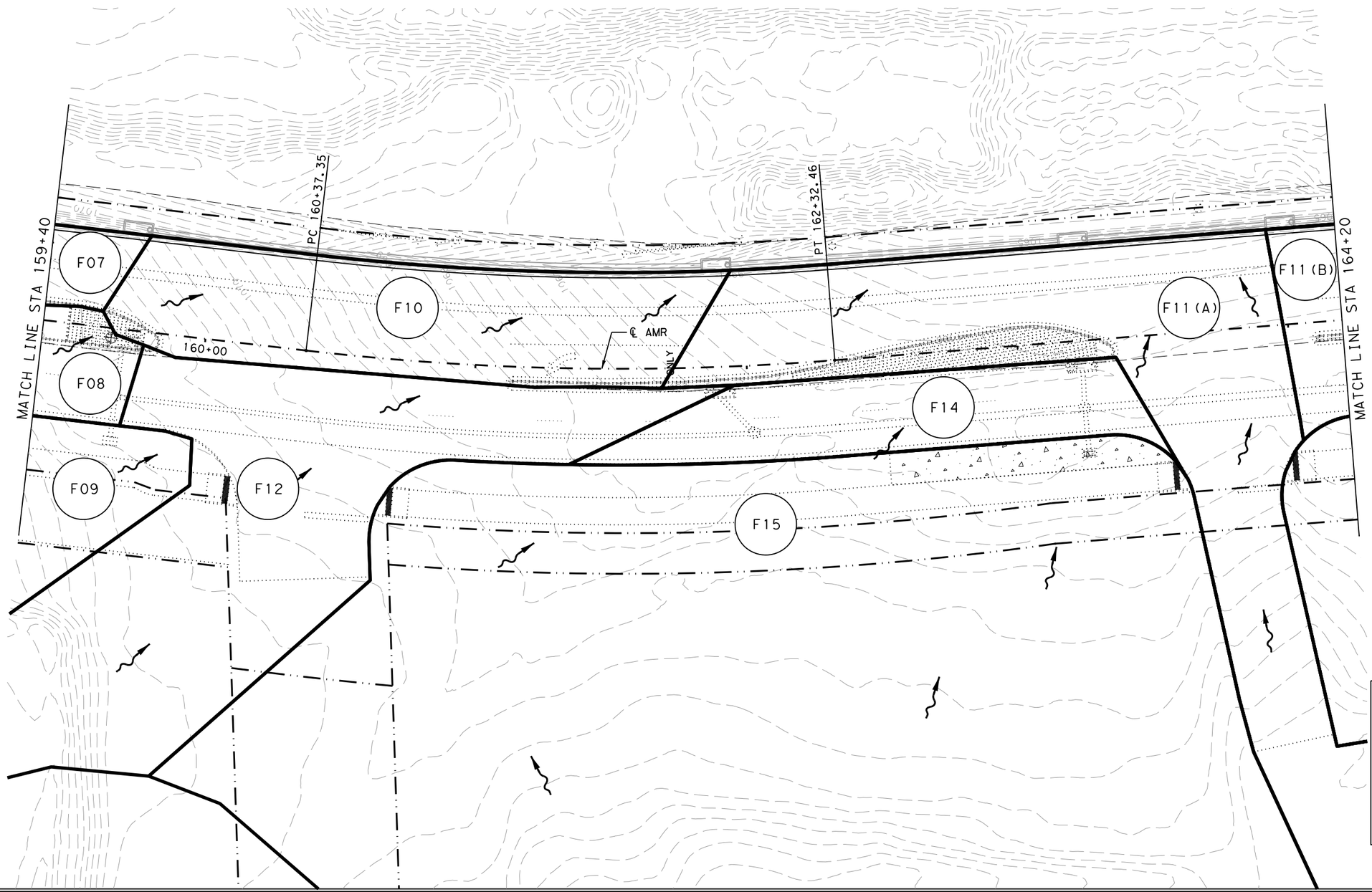


| NO | DATE | ISSUES AND REVISIONS |
|---|---|---|
| | | |

STATE OF TEXAS
AUSTIN S. HELTON
124922
LICENSED
PROFESSIONAL ENGINEER

8/5/2022

Kimley»Horn
F-928
10814 JOLLYVILLE ROAD
BLDG.4, STE 200
AUSTIN, TX 78759
PHONE: 512-418-1771

# DRAINAGE AREAS

SHEET 9 OF 10
ANDERSON MILL ROAD PHASE 2

CEDAR PARK



FILENAME: AMR-DRG-09.dgn
PLOTTED: 8/5/2022 3:44:18 PM

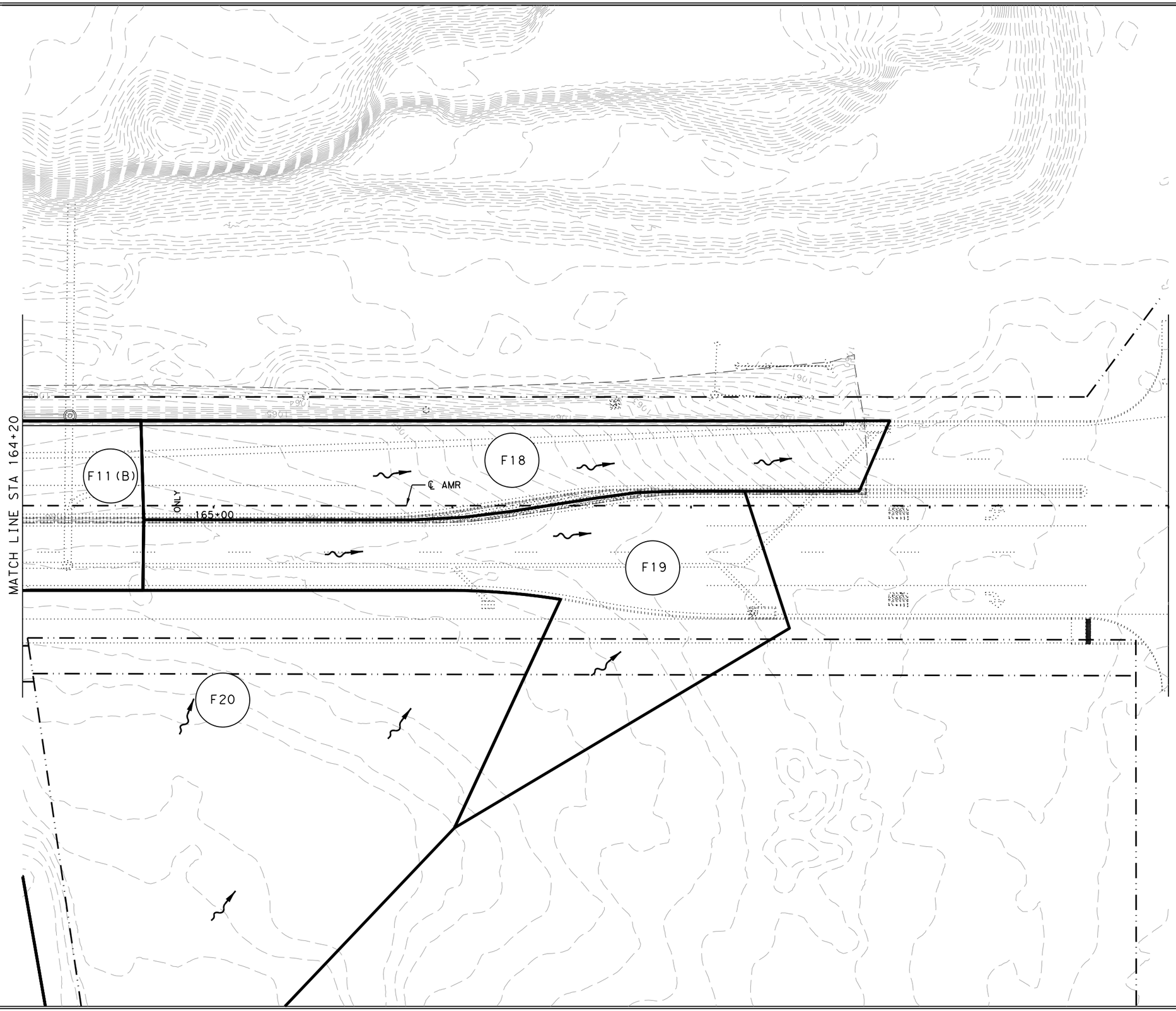


LEGEND

DRAINAGE AREA BOUNDARY

XX DRAINAGE AREA ID

| NO | DATE | ISSUES AND REVISIONS |
|---|---|---|
| | | |

STATE OF TEXAS
AUSTIN S. HELTON
124922
LICENSED
PROFESSIONAL ENGINEER
8/5/2022

Kimley»Horn
F-928
10814 JOLLYVILLE ROAD
BLDG. 4, STE 200
AUSTIN, TX 78759
PHONE: 512-418-1771

# DRAINAGE AREAS

SHEET 10 OF 10
ANDERSON MILL ROAD PHASE 2

CEDAR PARK



FILENAME: AMR-DRG-10.dgn
PLOTTED: 8/5/2022 3:44:42 PM

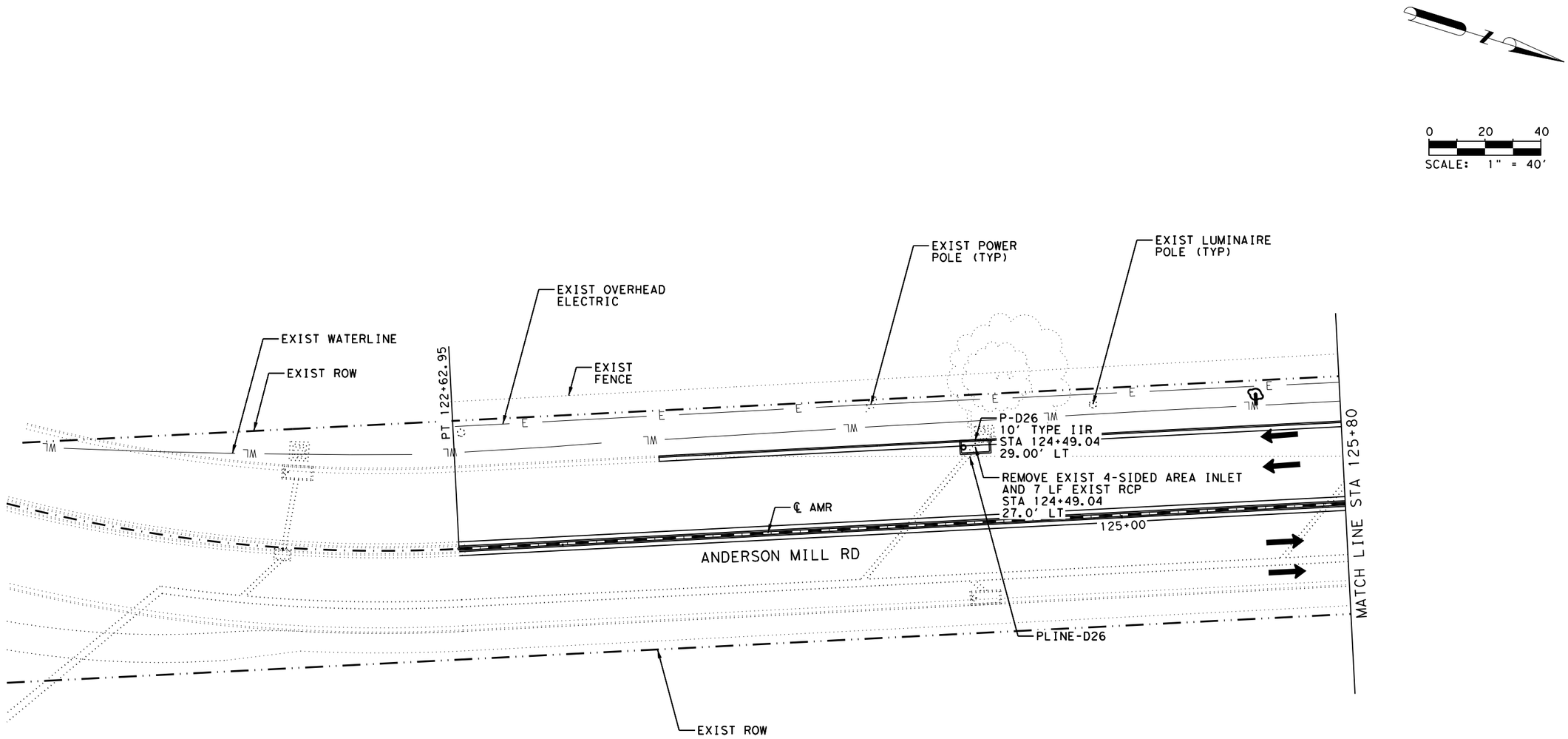


NOTES:

1. DIMENSIONS, STATIONS AND OFFSETS GIVEN AT FACE OF CURB UNLESS OTHERWISE NOTED.

| NO | DATE | ISSUES AND REVISIONS |
|---|---|---|
| | | |

STATE OF TEXAS
AUSTIN S. HELTON
124922
LICENSED
PROFESSIONAL ENGINEER
8/5/2022

Kimley»Horn
F-928
10814 JOLLYVILLE ROAD
BLDG. 4, STE 200
AUSTIN, TX 78759
PHONE: 512-418-1771

# DRAINAGE PLAN SHEETS

SHEET 1 OF 10
ANDERSON MILL ROAD PHASE 2

CEDAR PARK



FILENAME: AMR*STRM*01.dgn
PLOTTED: 8/5/2022 3:45:06 PM

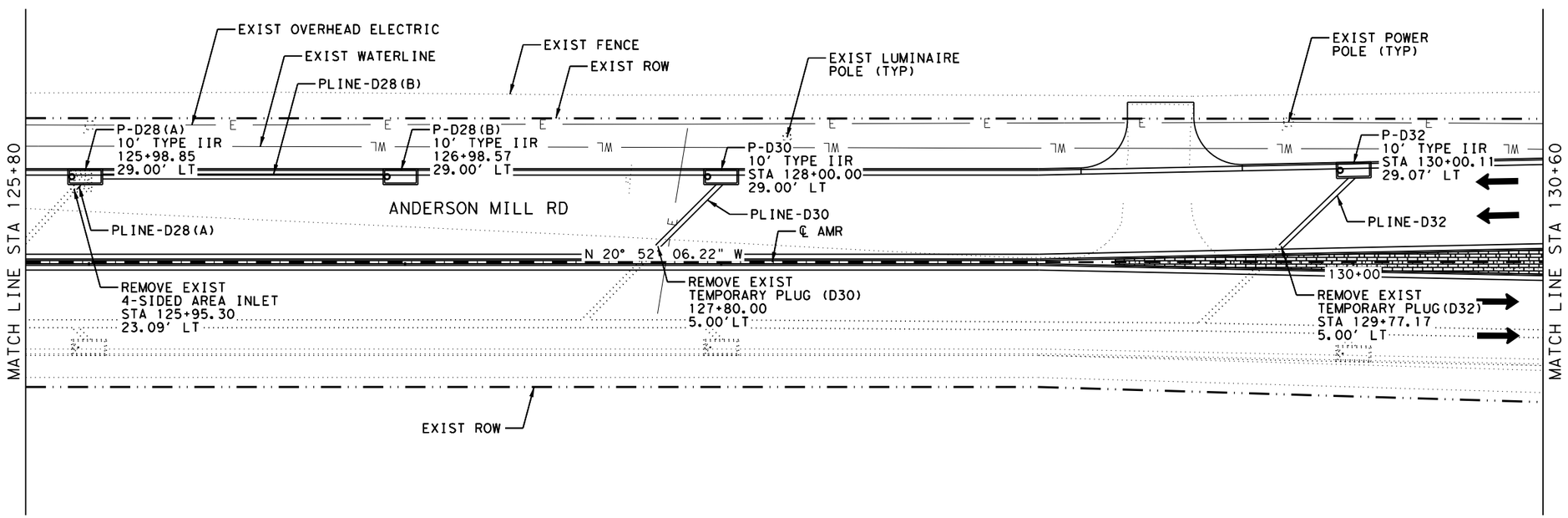


0 20 40
SCALE: 1" = 40'

NOTES:

1. DIMENSIONS, STATIONS AND OFFSETS GIVEN AT FACE OF CURB UNLESS OTHERWISE NOTED.

| NO | DATE | ISSUES AND REVISIONS |
|---|---|---|

STATE OF TEXAS
AUSTIN S. HELTON
124922
LICENSED
PROFESSIONAL ENGINEER
8/5/2022

Kimley»Horn
F-928
10814 JOLLYVILLE ROAD
BLDG. 4, STE 200
AUSTIN, TX 78759
PHONE: 512-418-1771

# DRAINAGE PLAN SHEETS

SHEET 2 OF 10
ANDERSON MILL ROAD PHASE 2

CEDAR PARK



FILENAME: AMR-STRM-02.dgn
PLOTTED: 8/5/2022 3:45:17 PM

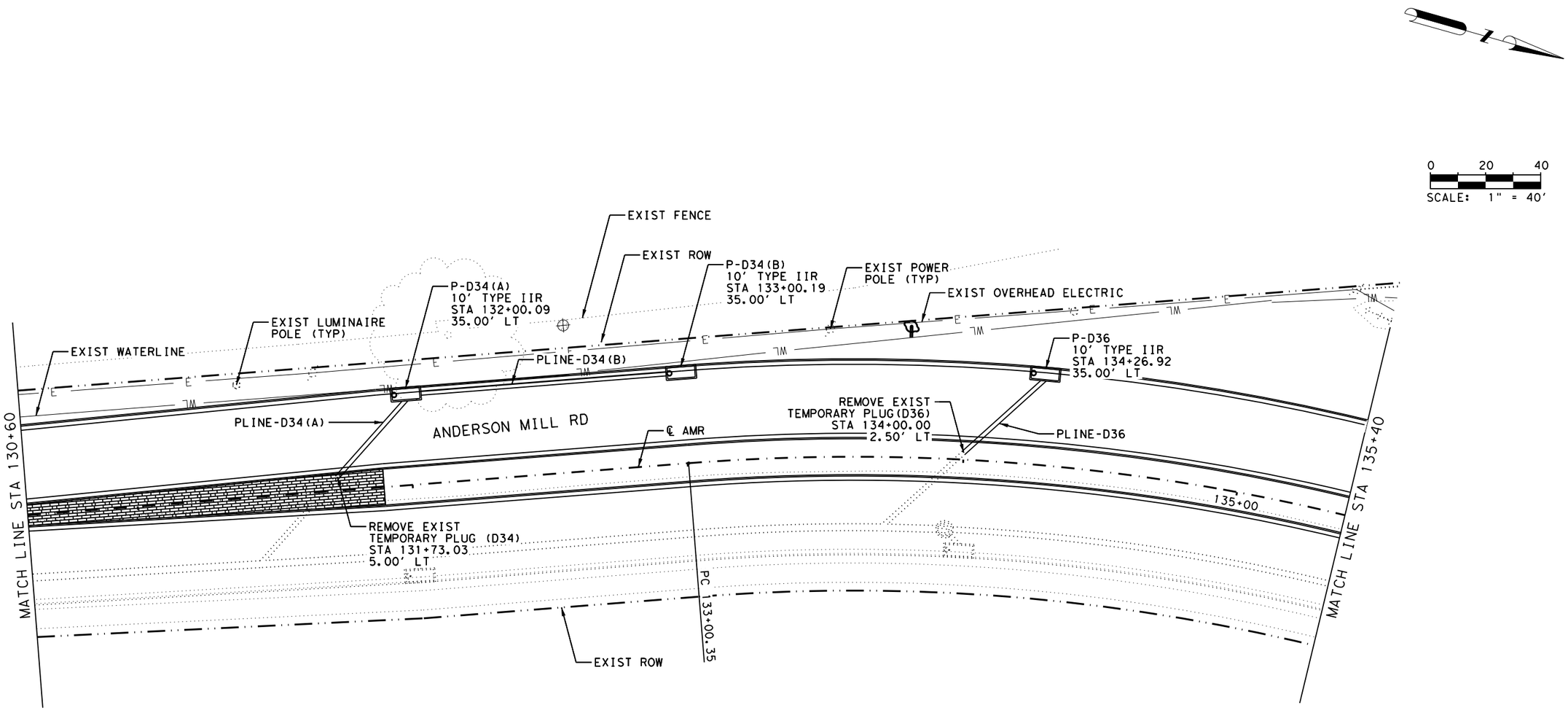


NOTES:

1. DIMENSIONS, STATIONS AND OFFSETS GIVEN AT FACE OF CURB UNLESS OTHERWISE NOTED.

| NO | DATE | ISSUES AND REVISIONS |
|---|---|---|

STATE OF TEXAS
AUSTIN S. HELTON
124922
LICENSED
PROFESSIONAL ENGINEER
8/5/2022

Kimley»Horn
F-928
10814 JOLLYVILLE ROAD
BLDG. 4, STE 200
AUSTIN, TX 78759
PHONE: 512-418-1771

# DRAINAGE PLAN SHEETS

SHEET 3 OF 10
ANDERSON MILL ROAD PHASE 2

CEDAR PARK



FILENAME: AMR+STRM+03.dgn
PLOTTED: 8/5/2022 3:45:23 PM

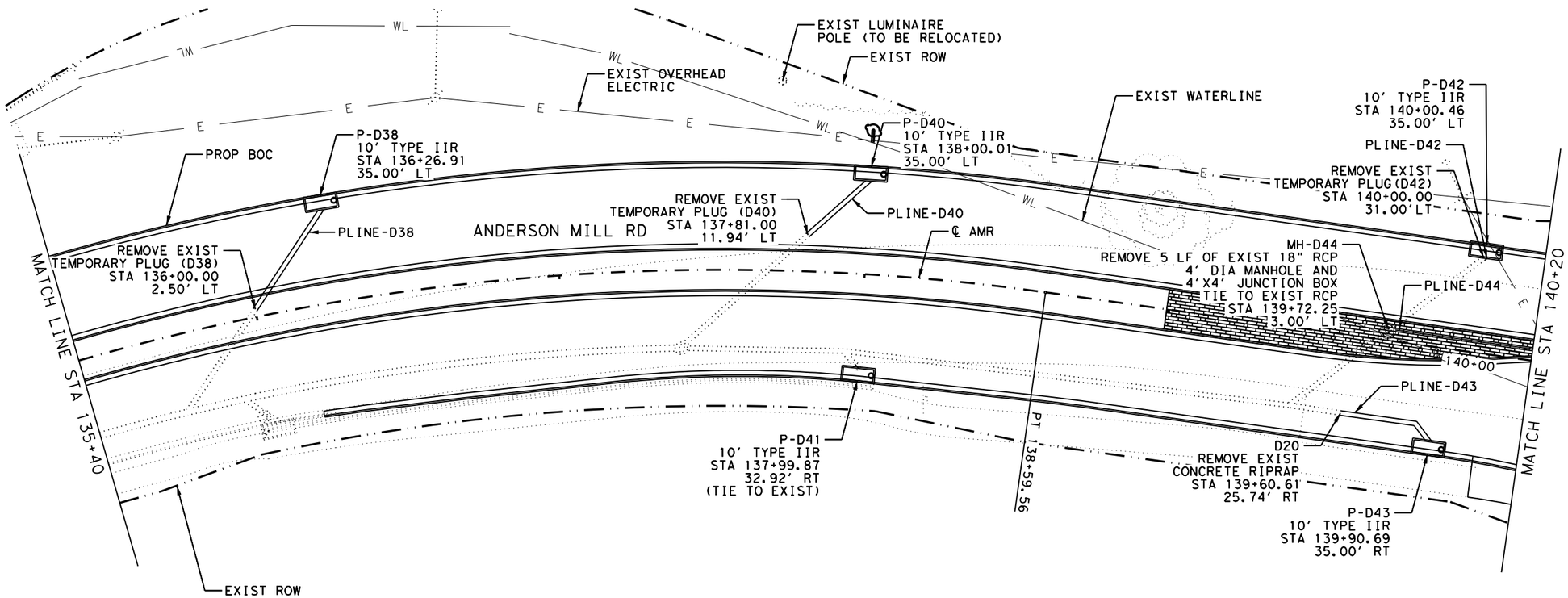


NOTES:

1. DIMENSIONS, STATIONS AND OFFSETS GIVEN AT FACE OF CURB UNLESS OTHERWISE NOTED.

| NO | DATE | ISSUES AND REVISIONS |
|---|---|---|

STATE OF TEXAS
AUSTIN S. HELTON
124922
LICENSED
PROFESSIONAL ENGINEER
8/5/2022

Kimley»Horn F-928
10814 JOLLYVILLE ROAD
BLDG. 4, STE 200
AUSTIN, TX 78759
PHONE: 512-418-1771

# DRAINAGE PLAN SHEETS

SHEET 4 OF 10
ANDERSON MILL ROAD PHASE 2

CEDAR PARK



FILENAME: AMR+STRM+04.dgn
PLOTTED: 8/5/2022 3:46:59 PM

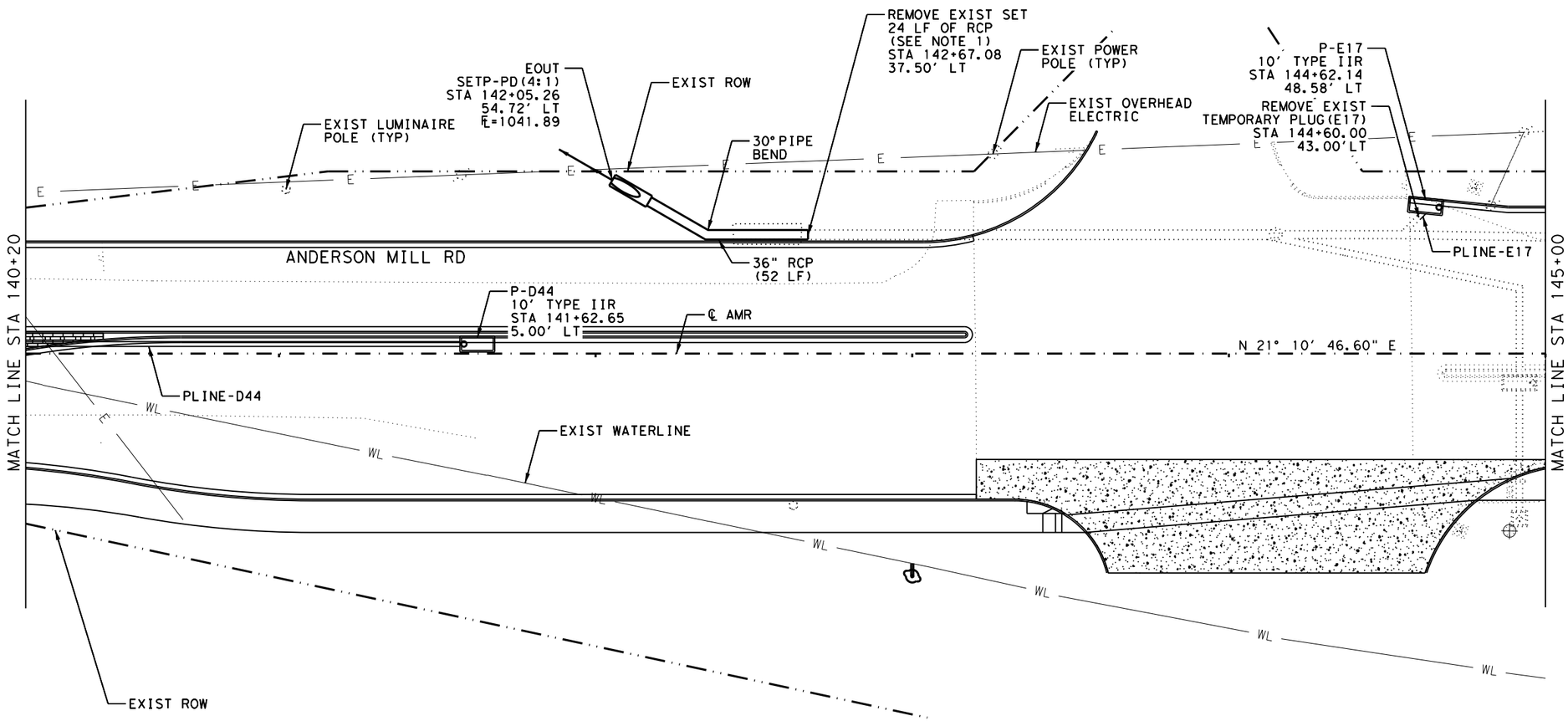


0 20 40
SCALE: 1" = 40'

NOTES:

1. CONTRACTOR TO REUSE METAL PIPE RUNNERS FROM EXISTING SET ON NEW SET.
2. DIMENSIONS, STATIONS AND OFFSETS GIVEN AT FACE OF CURB UNLESS OTHERWISE NOTED.

| NO | DATE | ISSUES AND REVISIONS |
|---|---|---|

STATE OF TEXAS
AUSTIN S. HELTON
124922
LICENSED
PROFESSIONAL ENGINEER
8/5/2022

Kimley»Horn F-928
10814 JOLLYVILLE ROAD
BLDG. 4, STE 200
AUSTIN, TX 78759
PHONE: 512-418-1771

# DRAINAGE PLAN SHEETS

SHEET 5 OF 10
ANDERSON MILL ROAD PHASE 2

CEDAR PARK



FILENAME: AMR+STRM+05.dgn
PLOTTED: 8/5/2022 3:47:10 PM

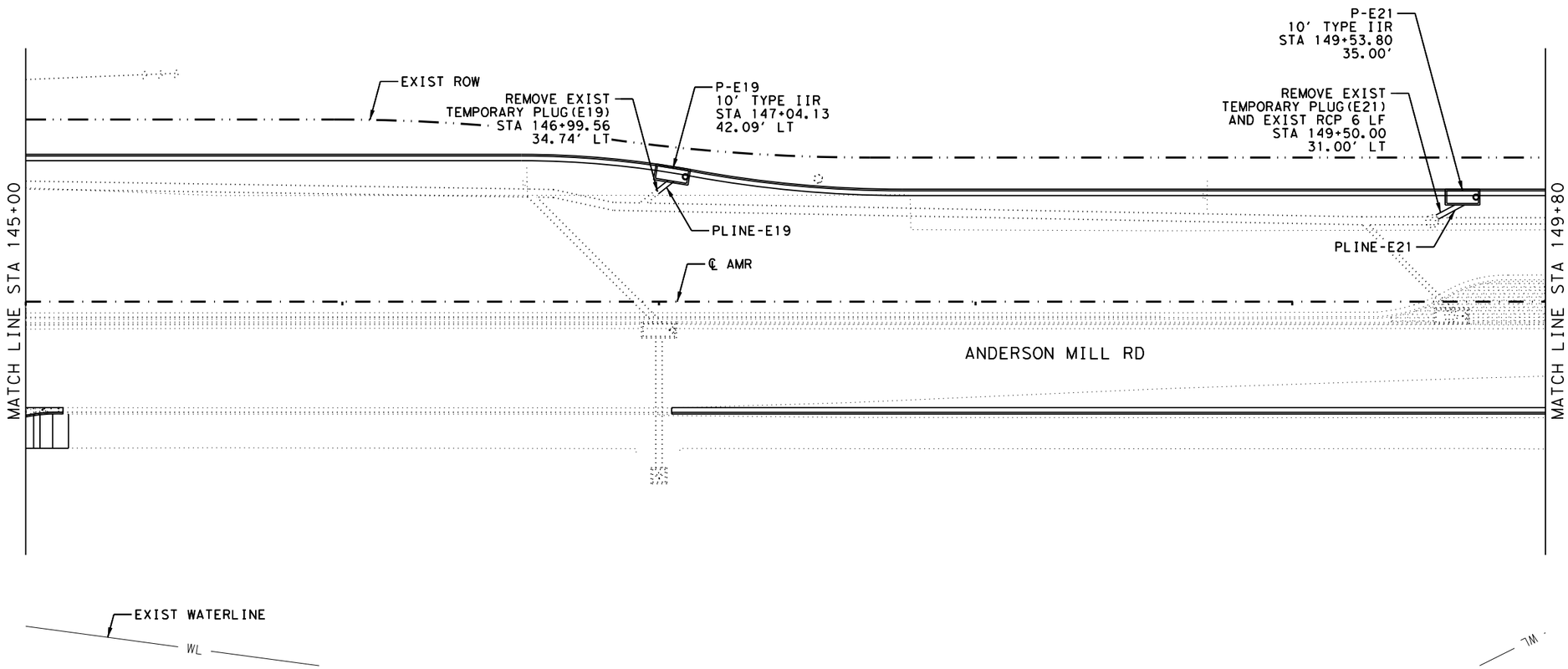


0 20 40
SCALE: 1" = 40'

NOTES:

1. DIMENSIONS, STATIONS AND OFFSETS GIVEN AT FACE OF CURB UNLESS OTHERWISE NOTED.

| NO | DATE | ISSUES AND REVISIONS |
|---|---|---|

STATE OF TEXAS
AUSTIN S. HELTON
124922
LICENSED
PROFESSIONAL ENGINEER
8/5/2022

Kimley»Horn
F-928
10814 JOLLYVILLE ROAD
BLDG. 4, STE 200
AUSTIN, TX 78759
PHONE: 512-418-1771

# DRAINAGE PLAN SHEETS

SHEET 6 OF 10
ANDERSON MILL ROAD PHASE 2

CEDAR PARK



FILENAME: AMR-STRM-06.dgn
PLOTTED: 8/5/2022 3:48:44 PM

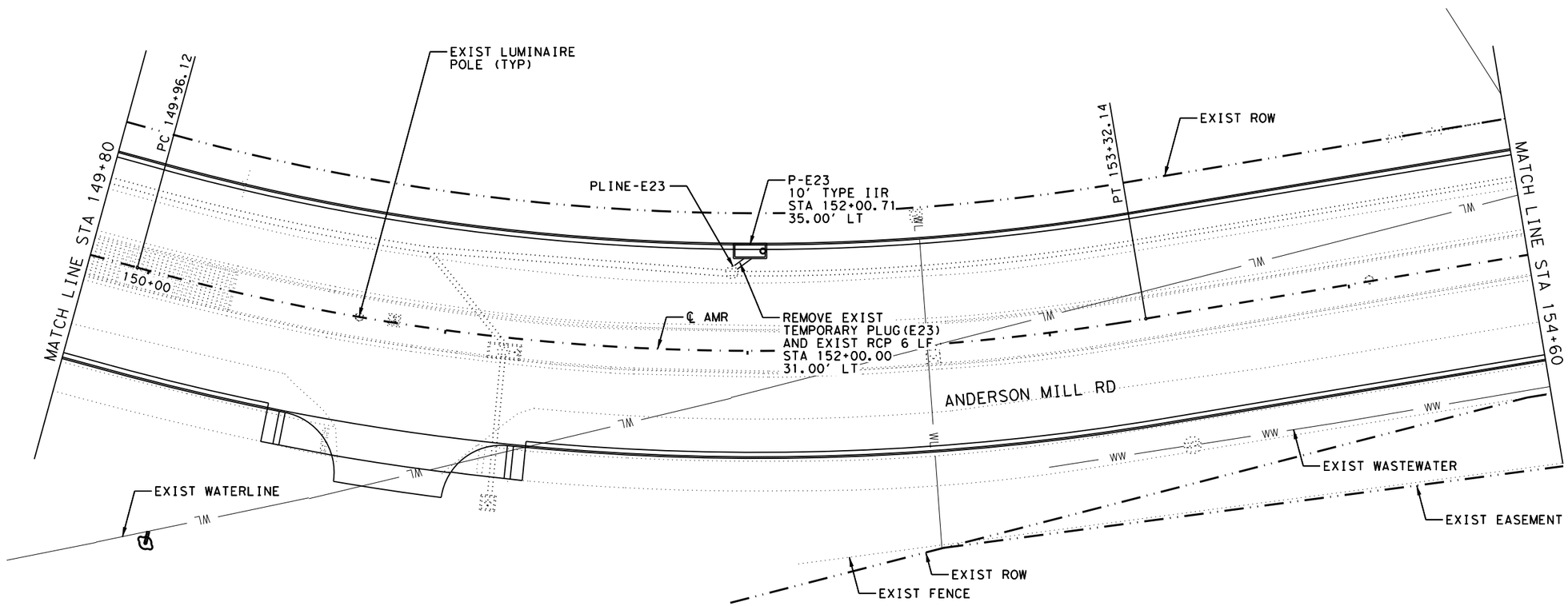


0 20 40
SCALE: 1" = 40'

NOTES:

1. DIMENSIONS, STATIONS AND OFFSETS GIVEN AT FACE OF CURB UNLESS OTHERWISE NOTED.

| NO | DATE | ISSUES AND REVISIONS |
|---|---|---|

STATE OF TEXAS
AUSTIN S. HELTON
124922
LICENSED
PROFESSIONAL ENGINEER
8/5/2022

Kimley»Horn
F-928
10814 JOLLYVILLE ROAD
BLDG. 4, STE 200
AUSTIN, TX 78759
PHONE: 512-418-1771

# DRAINAGE PLAN SHEETS

SHEET 7 OF 10
ANDERSON MILL ROAD PHASE 2

CEDAR PARK



FILENAME: AMR+STRM+07.dgn
PLOTTED: 8/5/2022 3:48:54 PM

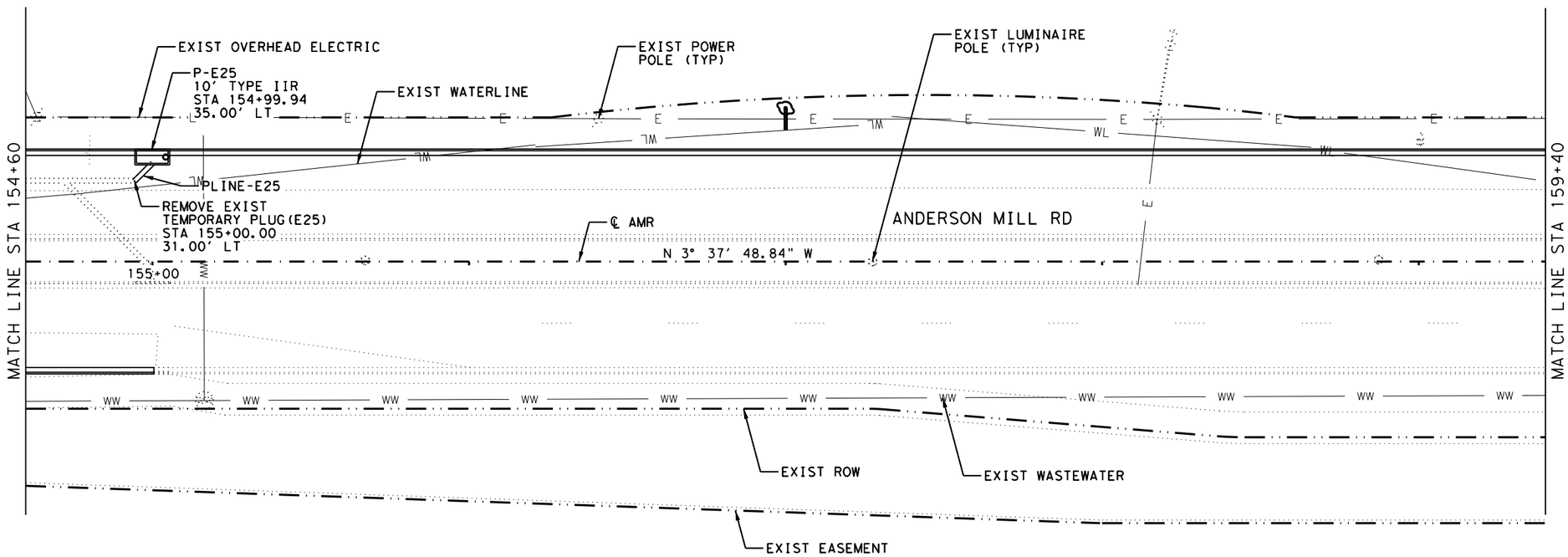


0 20 40
SCALE: 1" = 40'

NOTES:

1. DIMENSIONS, STATIONS AND OFFSETS GIVEN AT FACE OF CURB UNLESS OTHERWISE NOTED.

| NO | DATE | ISSUES AND REVISIONS |
|---|---|---|

STATE OF TEXAS
AUSTIN S. HELTON
124922
LICENSED
PROFESSIONAL ENGINEER
8/5/2022

Kimley»Horn
F-928
10814 JOLLYVILLE ROAD
BLDG. 4, STE 200
AUSTIN, TX 78759
PHONE: 512-418-1771

# DRAINAGE PLAN SHEETS

SHEET 8 OF 10
ANDERSON MILL ROAD PHASE 2

CEDAR PARK



FILENAME: AMR+STRM+08.dgn
PLOTTED: 8/5/2022 3:48:58 PM

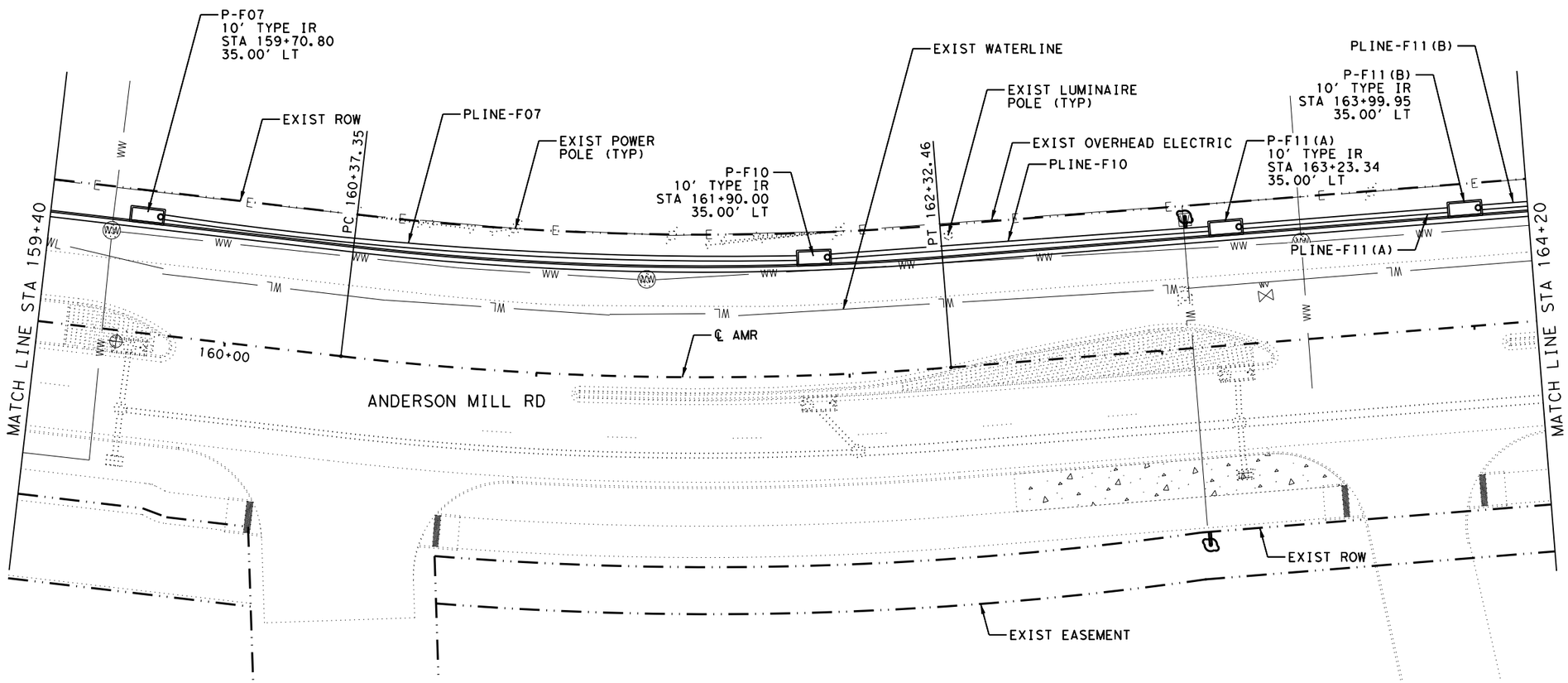


0 20 40
SCALE: 1" = 40'

NOTES:

1. DIMENSIONS, STATIONS AND OFFSETS GIVEN AT FACE OF CURB UNLESS OTHERWISE NOTED.
2. WHERE ADEQUATE CLEARANCE BETWEEN STORM DRAIN AND LUMINARIES CAN BE ACHIEVED, CONTRACTOR TO EXERCISE EXTREME CAUTION WHILE EXCAVATING STORM DRAIN TRENCH ADJACENT TO EXISTING LUMINAIRE FOUNDATION.
3. WHERE ADEQUATE CLEARANCE BETWEEN STORM DRAIN AND LUMINARIES CAN NOT BE ACHIEVED, CONTRACTOR TO TEMPORARILY SUPPORT EXISTING LUMINAIRE POLE DURING EXCAVATION TO CONSTRUCT STORM DRAIN. BACKFILL STORM DRAIN TRENCH WITH CEMENT STABILIZED BACKFILL OR FLOWABLE FILL FROM 5' OF POLE IN EITHER DIRECTION. THIS WORK WOULD BE CONSIDERED SUBSIDIARY TO ITEM 5095-1

| NO | DATE | ISSUES AND REVISIONS |
|---|---|---|

STATE OF TEXAS
AUSTIN S. HELTON
124922
LICENSED
PROFESSIONAL ENGINEER
8/5/2022

Kimley»Horn
F-928
10814 JOLLYVILLE ROAD
BLDG. 4, STE 200
AUSTIN, TX 78759
PHONE: 512-418-1771

# DRAINAGE PLAN SHEETS

SHEET 9 OF 10
ANDERSON MILL ROAD PHASE 2

CEDAR PARK



FILENAME: AMR*STRM*09.dgn
PLOTTED: 8/5/2022 3:49:03 PM

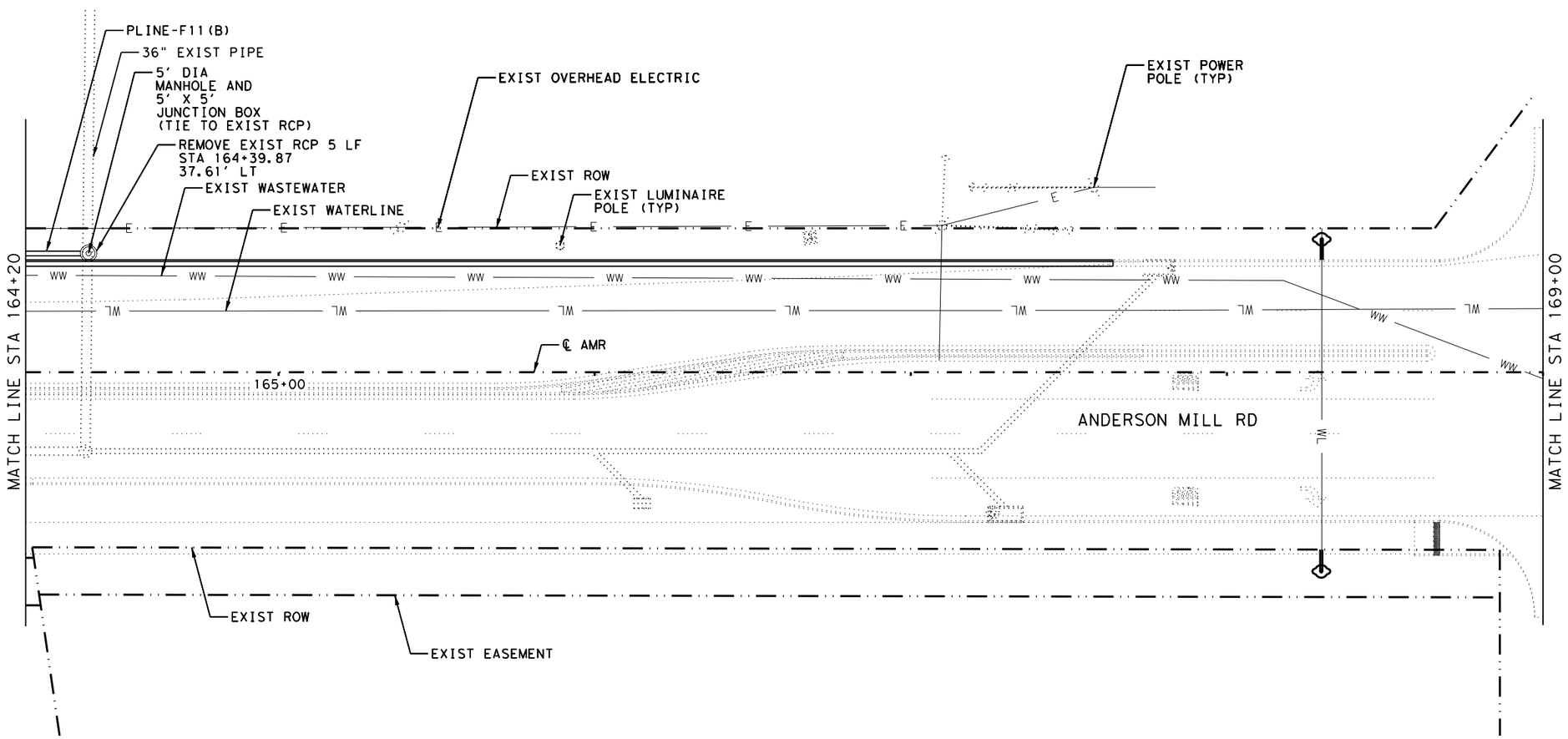


0 20 40
SCALE: 1" = 40'

NOTES:

1. DIMENSIONS, STATIONS AND OFFSETS GIVEN AT FACE OF CURB UNLESS OTHERWISE NOTED.

| NO | DATE | ISSUES AND REVISIONS |
|---|---|---|

STATE OF TEXAS
AUSTIN S. HELTON
124922
LICENSED
PROFESSIONAL ENGINEER
8/5/2022

Kimley»Horn
F-928
10814 JOLLYVILLE ROAD
BLDG. 4, STE 200
AUSTIN, TX 78759
PHONE: 512-418-1771

# DRAINAGE PLAN SHEETS

SHEET 10 OF 10
ANDERSON MILL ROAD PHASE 2

CEDAR PARK



FILENAME: AMR-STRM-10.dgn
PLOTTED: 8/5/2022 3:49:12 PM

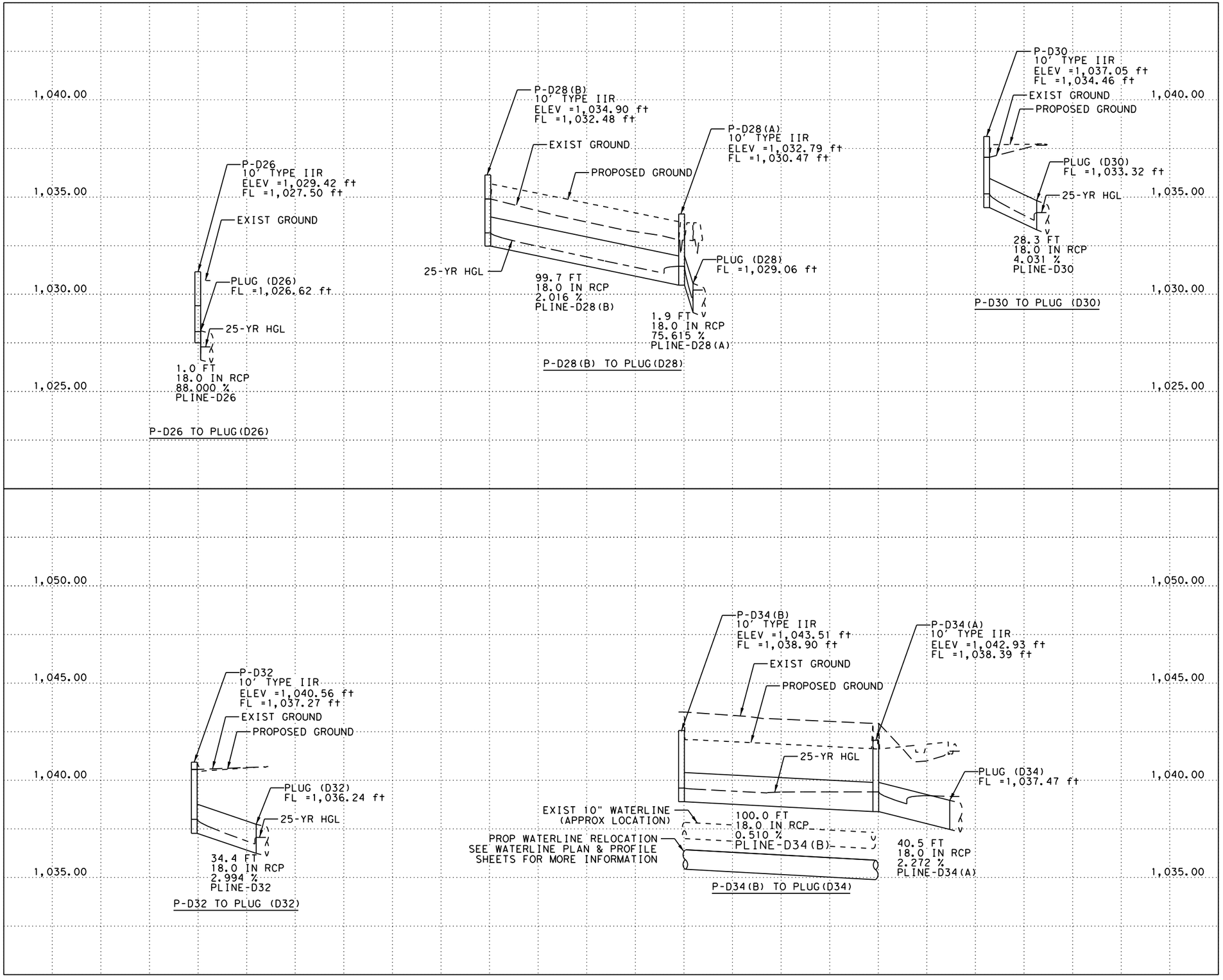


| NO | DATE | ISSUES AND REVISIONS |
|---|---|---|

STATE OF TEXAS
AUSTIN S. HELTON
124922
LICENSED
PROFESSIONAL ENGINEER

8/5/2022

Kimley»Horn
F-928
10814 JOLLYVILLE ROAD
BLDG. 4, STE 200
AUSTIN, TX 78759
PHONE: 512-418-1771

# DRAINAGE PROFILE SHEETS

SHEET 1 OF 4
ANDERSON MILL ROAD PHASE 2

CEDAR PARK



FILENAME: AMR*PROF*DRG*01.dgn
PLOTTED: 8/5/2022 3:49:18 PM

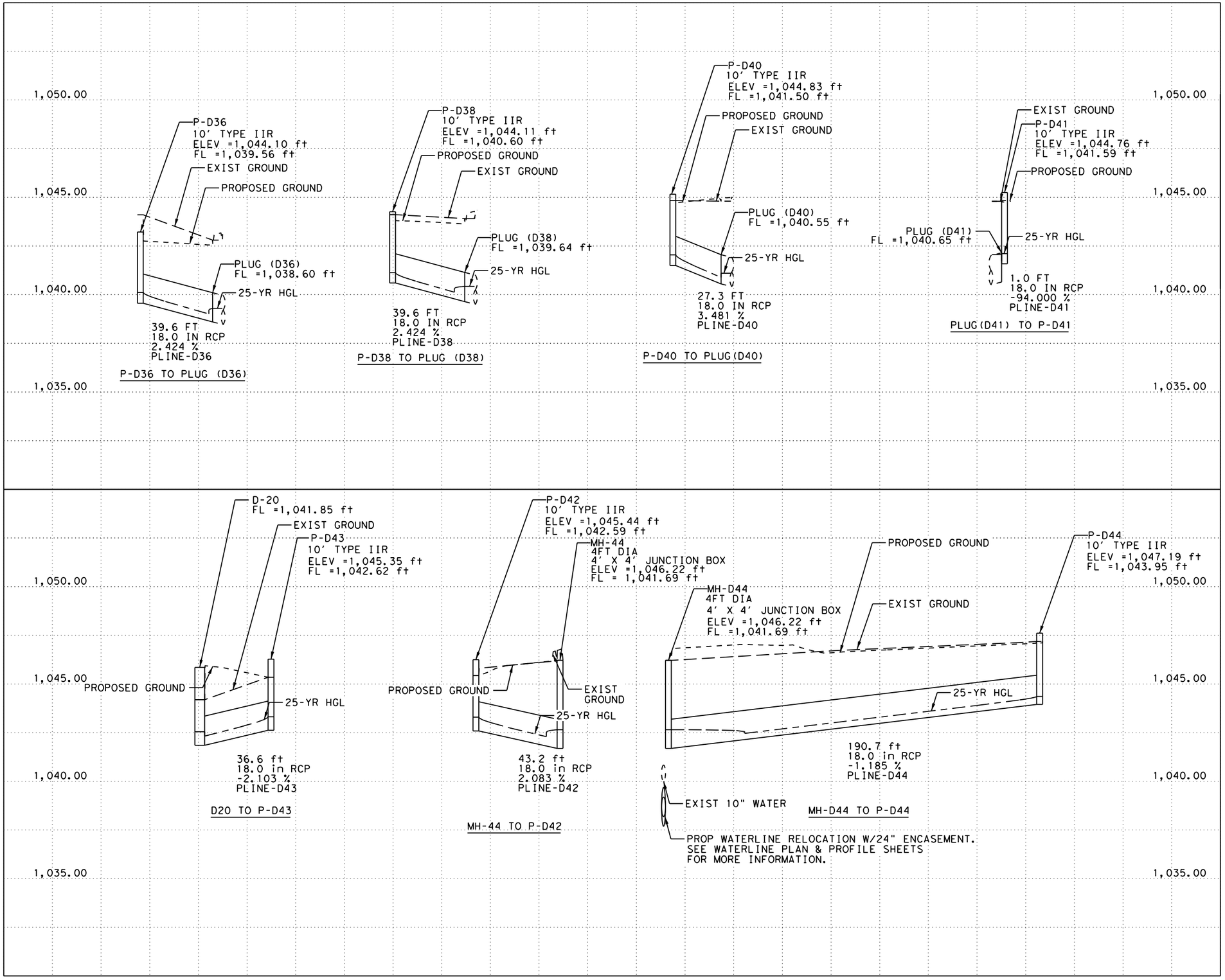


0 25 50
SCALE: 1" = 50'
(HORIZONTAL)

| NO | DATE | ISSUES AND REVISIONS |
|---|---|---|

STATE OF TEXAS
AUSTIN S. HELTON
124922
LICENSED
PROFESSIONAL ENGINEER
8/5/2022

Kimley»Horn
F-928
10814 JOLLYVILLE ROAD
BLDG. 4, STE 200
AUSTIN, TX 78759
PHONE: 512-418-1771

# DRAINAGE PROFILE SHEETS

SHEET 2 OF 4
ANDERSON MILL ROAD PHASE 2

CEDAR PARK



FILENAME: AMR*PROF*DRG*02.dgn
PLOTTED: 8/5/2022 3:49:24 PM

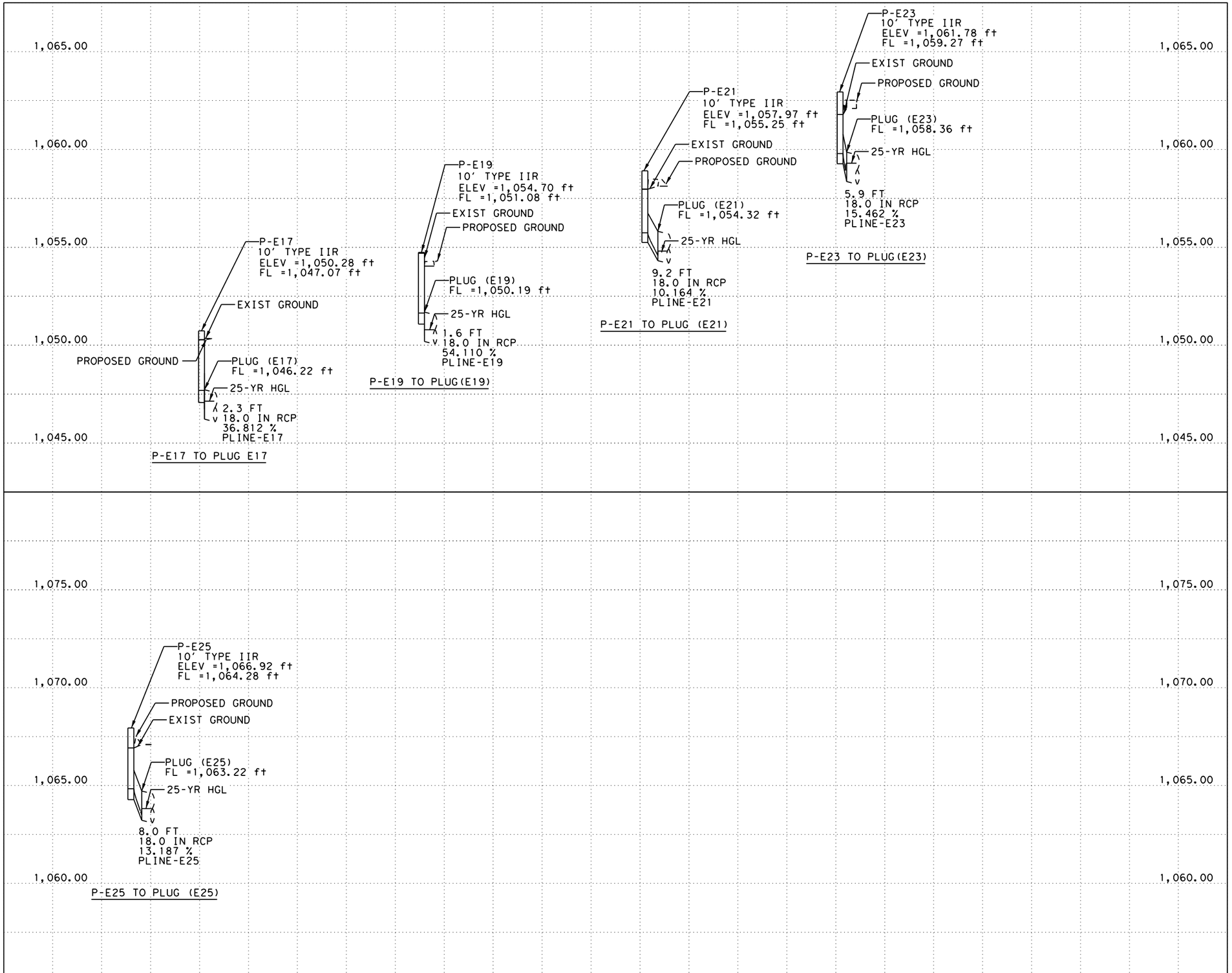


0 25 50
SCALE: 1" = 50'
(HORIZONTAL)

| NO | DATE | ISSUES AND REVISIONS |
|---|---|---|

STATE OF TEXAS
AUSTIN S. HELTON
124922
LICENSED
PROFESSIONAL ENGINEER

8/5/2022

Kimley»Horn
F-928
10814 JOLLYVILLE ROAD
BLDG. 4, STE 200
AUSTIN, TX 78759
PHONE: 512-418-1771

# DRAINAGE PROFILE SHEETS

SHEET 3 OF 4
ANDERSON MILL ROAD PHASE 2

CEDAR PARK



FILENAME: AMR*PROF*DRG*03.dgn
PLOTTED: 8/5/2022 3:49:30 PM

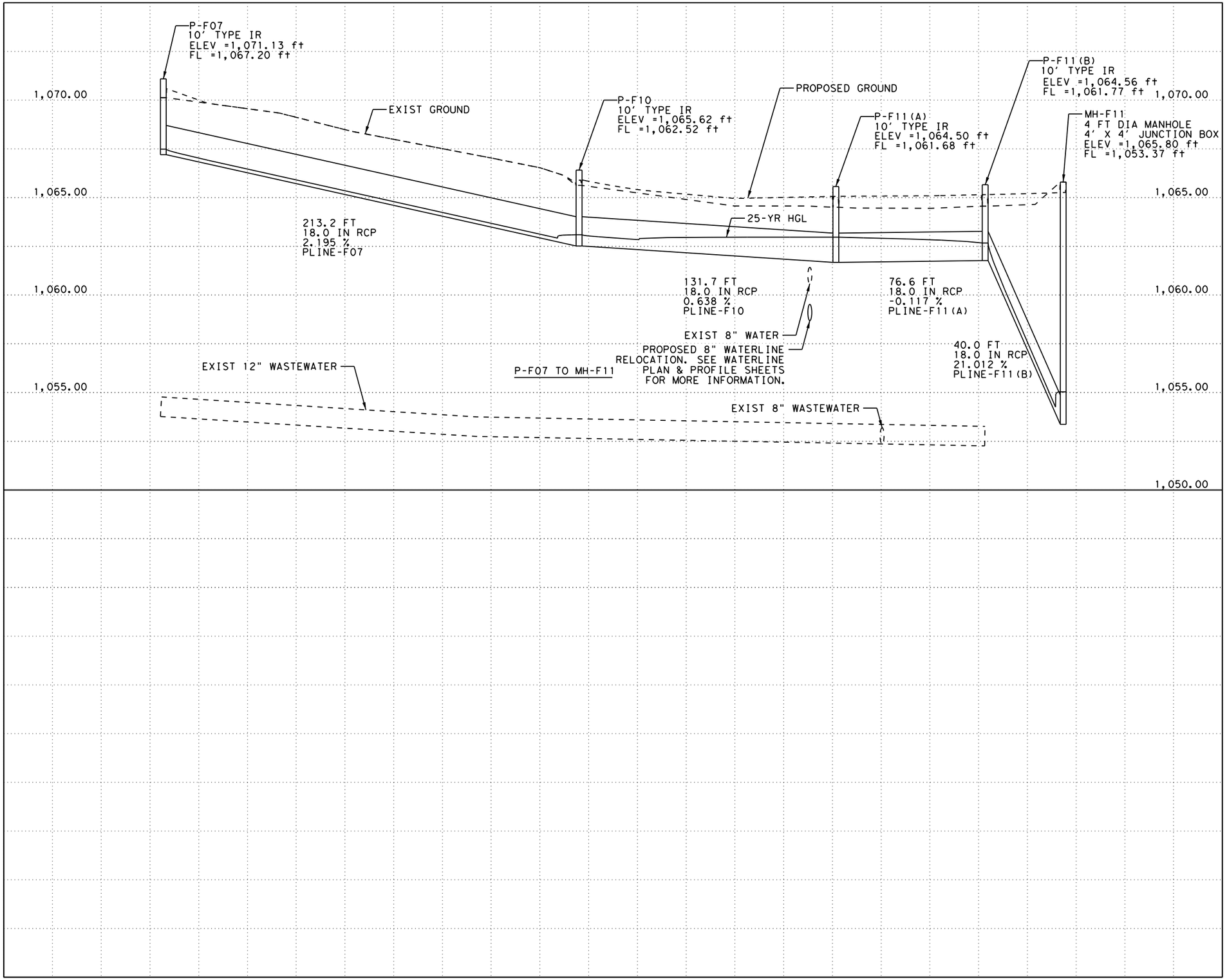


0 25 50
SCALE: 1" = 50'
(HORIZONTAL)

| NO | DATE | ISSUES AND REVISIONS |
|---|---|---|

STATE OF TEXAS
AUSTIN S. HELTON
124922
LICENSED
PROFESSIONAL ENGINEER
8/5/2022

Kimley»Horn
F-928
10814 JOLLYVILLE ROAD
BLDG. 4, STE 200
AUSTIN, TX 78759
PHONE: 512-418-1771

# DRAINAGE PROFILE SHEETS

SHEET 4 OF 4
ANDERSON MILL ROAD PHASE 2

CEDAR PARK



FILENAME: AMR*PROF*DRG*04.dgn
PLOTTED: 8/5/2022 3:49:34 PM

| AREA ID | AREA (ac) | AREA TIME OF CONC (min) | AREA C-VALUE (25 YR) | AREA 25 YR INTENSITY (in/hr) | AREA 25 YR DISCHARGE (cfs) | AREA C-VALUE (100 YR) | AREA 100 YR INTENSITY (in/hr) | AREA 100 YR DISCHARGE (cfs) |
|---|---|---|---|---|---|---|---|---|
| PC-D26 | 0.263 | 5 | 0.57 | 10.11 | 1.53 | 0.65 | 12.55 | 2.16 |
| PC-D28(A) | 0.71 | 5 | 0.44 | 10.11 | 3.20 | 0.51 | 12.55 | 4.62 |
| PC-D28(B) | 0.577 | 5 | 0.46 | 10.11 | 2.68 | 0.53 | 12.55 | 3.86 |
| PC-D30 | 1.053 | 10 | 0.47 | 8.19 | 4.04 | 0.54 | 10.40 | 5.93 |
| PC-D32 | 1.023 | 10 | 0.47 | 8.19 | 3.98 | 0.54 | 10.40 | 5.83 |
| PC-D34(A) | 1.013 | 10 | 0.44 | 8.19 | 3.68 | 0.51 | 10.40 | 5.43 |
| PC-D34(B) | 0.942 | 10 | 0.45 | 8.19 | 3.50 | 0.52 | 12.55 | 6.22 |
| PC-D36 | 0.335 | 5 | 0.63 | 10.11 | 2.16 | 0.71 | 12.55 | 3.02 |
| PC-D38 | 0.312 | 5 | 0.62 | 10.11 | 1.95 | 0.69 | 12.55 | 2.73 |
| PC-D40 | 0.263 | 5 | 0.72 | 10.11 | 1.93 | 0.80 | 12.55 | 2.68 |
| PC-D41 | 0.22 | 5 | 0.84 | 10.11 | 1.90 | 0.93 | 12.55 | 2.6 |
| PC-D42 | 0.609 | 5 | 0.58 | 10.11 | 3.60 | 0.66 | 12.55 | 5.07 |
| PC-D43 | 0.544 | 5 | 0.63 | 10.11 | 3.52 | 0.71 | 12.55 | 4.92 |
| PC-D44 | 0.141 | 5 | 0.83 | 10.11 | 1.20 | 0.92 | 12.55 | 1.64 |
| PC-E17 | 0.356 | 5 | 0.79 | 10.11 | 2.85 | 0.87 | 12.55 | 3.93 |
| PC-E19 | 0.3 | 5 | 0.76 | 10.11 | 2.33 | 0.85 | 12.55 | 3.22 |
| PC-E21 | 0.234 | 5 | 0.70 | 10.11 | 1.67 | 0.78 | 12.55 | 2.31 |
| PC-E23 | 0.255 | 5 | 0.72 | 10.11 | 1.87 | 0.80 | 12.55 | 2.6 |
| PC-E25 | 0.293 | 5 | 0.75 | 10.11 | 2.24 | 0.84 | 12.55 | 3.09 |
| PC-F07 | 0.075 | 5 | 0.79 | 10.11 | 0.60 | 0.88 | 12.55 | 0.82 |
| PC-F10 | 0.205 | 5 | 0.86 | 10.11 | 1.79 | 5.59 | 12.55 | 2.59 |
| PC-F11(A) | 0.428 | 5 | 0.57 | 10.11 | 2.47 | 0.63 | 12.55 | 3.42 |
| PC-F11(B) | 0.119 | 5 | 0.92 | 10.11 | 1.11 | 1.01 | 12.55 | 1.51 |

ISSUES AND REVISIONS

| NO | DATE |
|---|---|

STATE OF TEXAS
AUSTIN S. HELTON
124922
LICENSED
PROFESSIONAL ENGINEER

8/5/2022

Kimley»Horn F-928
10814 JOLLYVILLE ROAD
BLDG. 4, STE 200
AUSTIN, TX 78759
PHONE: 512-418-1771

HYDROLOGIC DATA AREAS

SHEET 1 OF 1
ANDERSON MILL ROAD PHASE 2

CEDAR PARK



FILENAME: AMR*HYDRO*DATA*AREAS.dgn
PLOTTED: 8/5/2022 3:49:43 PM

25 YEAR ON GRADE INLET AND SAG CONFIGURATION DATA

| INLET ID | INLET TYPE | INLET LOCATION | STATION | OFFSET | RIM | INVERT | GROUND ELEV | DRAINAGE AREA ID | INLET DISCHARGE (cfs) | CARRY-OVER FLOW (cfs) | BYPASS NODE | CARRYOVER RATIONAL FLOW(cfs) | TOTAL RUNOFF (QA) (cfs) | SLOPE | GUTTER DEPRESSION (in) | PONDED DEPTH (in) | PONDED WIDTH (ft) | MAX PONDED WIDTH (ft) |
|---|---|---|---|---|---|---|---|---|---|---|---|---|---|---|---|---|---|---|
| P-D26 | TY II R | On Grade | 124+49.04 | -29.00 | 1031.16 | 1027.50 | 1029.42 | PC-D26 | 2.33 | 0.22 | D51 | 1.01 | 3.34 | 1.82 | 4 | 2 | 8.2 | 13 |
| P-D28(A) | TY II R | On Grade | 125+98.85 | -29.00 | 1034.13 | 1030.47 | 1032.79 | PC-D28(A) | 3.2 | 1.01 | P-D26 | 1.01 | 4.21 | 2 | 4 | 2.3 | 9.7 | 13 |
| P-D28(B) | TY II R | On Grade | 126+98.57 | -29.00 | 1036.14 | 1032.48 | 1034.90 | PC-D28(B) | 3.19 | 1.01 | P-D28A | 1.51 | 4.7 | 2 | 4 | 2.3 | 9.7 | 13 |
| P-D30 | TY II R | On Grade | 128+00.00 | -29.00 | 1038.12 | 1034.46 | 1037.05 | PC-D30 | 3.43 | 1.23 | P-D28B | 0.62 | 4.05 | 1.87 | 4 | 2.5 | 10.2 | 13 |
| P-D32 | TY II R | On Grade | 130+00.11 | -29.07 | 1040.91 | 1037.25 | 1040.03 | PC-D32 | 3.61 | 0.62 | P-D30 | 0.25 | 3.86 | 0.87 | 4 | 2.7 | 11.4 | 13 |
| P-D34 (A) | TY II R | On Grade | 132+00.09 | -35.00 | 1042.06 | 1038.39 | 1042.93 | PC-D34 (A) | 3.58 | 0.25 | P-D32 | 0.16 | 3.74 | 0.52 | 4 | 2.9 | 12.1 | 13 |
| P-D34 (B) | TY II R | On Grade | 133+00.19 | -35.00 | 1042.56 | 1038.90 | 1043.51 | PC-D34 (B) | 3.34 | 0.16 | P-D34(A) | 0 | 3.34 | 0.52 | 4 | 2.8 | 11.7 | 13 |
| P-D36 | TY II R | On Grade | 134+26.92 | -35.00 | 1043.22 | 1039.56 | 1044.10 | PC-D36 | 2.16 | 0 | P-D34(B) | 0 | 2.16 | 0.52 | 4 | 2.3 | 9.8 | 13 |
| P-D38 | TY II R | On Grade | 136+26.91 | -35.00 | 1044.26 | 1040.60 | 1044.11 | PC-D38 | 1.95 | 0 | P-D36 | 0 | 1.95 | 0.52 | 4 | 2.3 | 9.4 | 13 |
| P-D40 | TY II R | On Grade | 138+00.01 | -35.00 | 1045.16 | 1041.50 | 1044.83 | PC-D40 | 2.12 | 0 | P-D38 | 0.19 | 2.31 | 0.52 | 4 | 2.3 | 9.7 | 13 |
| P-D41 | TY II R | On Grade | 137+99.87 | -32.92 | 1045.25 | 1041.59 | 1044.76 | PC-D41 | 1.9 | 0 | * | 0 | 1.9 | 0.52 | 4 | 2.2 | 9.3 | 13 |
| P-D42 | TY II R | On Grade | 140+00.46 | -35.00 | 1046.25 | 1042.59 | 1045.44 | PC-D42 | 3.42 | 0.19 | P-D40 | 0 | 3.42 | 0.52 | 4 | 2.8 | 11.8 | 13 |
| P-D43 | TY II R | On Grade | 139+90.69 | -35.00 | 1046.28 | 1042.62 | 1045.35 | PC-D43 | 3.35 | 0.16 | P-D41 | 0 | 3.35 | 0.52 | 4 | 2.8 | 11.7 | 13 |
| P-D44 | TY II R | On Grade | 141+62.65 | -5.00 | 1047.61 | 1043.95 | 1047.19 | PC-D44 | 1.2 | 0 | * | 0 | 1.2 | 0.59 | 4 | 1.8 | 7.6 | 13 |
| P-E17 | TY II R | On Grade | 144+62.14 | -48.58 | 1050.73 | 1047.07 | 1050.28 | PC-E17 | 2.63 | 0.34 | * | 0.12 | 2.75 | 1.62 | 4 | 2.1 | 8.9 | 13 |
| P-E19 | TY II R | On Grade | 147+04.13 | -42.09 | 1054.74 | 1051.08 | 1054.70 | PC-E19 | 2.21 | 0.12 | P-E17 | 0 | 2.21 | 1.62 | 4 | 2 | 8.1 | 13 |
| P-E21 | TY II R | On Grade | 149+53.80 | -35.00 | 1058.91 | 1055.25 | 1057.97 | PC-E21 | 1.71 | 0 | P-E19 | 0.04 | 1.75 | 1.62 | 4 | 1.7 | 7.2 | 13 |
| P-E23 | TY II R | On Grade | 152+00.71 | -35.00 | 1062.94 | 1059.27 | 1061.78 | PC-E23 | 1.93 | 0.04 | P-E21 | 0.1 | 2.03 | 1.62 | 4 | 1.8 | 7.6 | 13 |
| P-E25 | TY II R | On Grade | 154+99.94 | -35.00 | 1067.94 | 1064.28 | 1066.92 | PC-E25 | 2.14 | 0.1 | P-E23 | 0 | 2.14 | 1.62 | 4 | 1.9 | 8 | 13 |
| P-F07 | Type 1-R | On Grade | 159+70.80 | -35.00 | 1071.09 | 1067.20 | 1070.13 | PC-F07 | 0.6 | 0 | * | 0 | 0.6 | 1.63 | 6.3 | 1.2 | 4.9 | 13 |
| P-F10 | Type 1-R | On Grade | 161+90.00 | -35.00 | 1066.41 | 1062.52 | 1065.62 | PC-F10 | 1.79 | 0 | P-F07 | 0 | 1.79 | 1.41 | 6.3 | 1.8 | 7.5 | 13 |
| P-F11 (A) | Type 1-R | In Sag | 163+23.34 | -35.00 | 1065.57 | 1061.68 | 1064.50 | PC-F11(B) | 2.47 | 0 | P-F10 | 0 | 2.47 | 0.08 | 6.3 | 8.6 | 9.6 | 13 |
| P-F11 (B) | Type 1-R | On Grade | 163+99.95 | -35.00 | 1065.66 | 1061.77 | 1064.56 | PC-F11(A) | 1.11 | 0 | * | 0 | 1.11 | 0.3 | 6.3 | 2 | 8.4 | 13 |

| NO | DATE | ISSUES AND REVISIONS |
|---|---|---|

STATE OF TEXAS
AUSTIN S. HELTON
124922
LICENSED
PROFESSIONAL ENGINEER

8/5/2022

Kimley»Horn F-928
10814 JOLLYVILLE ROAD
BLDG. 4, STE 200
AUSTIN, TX 78759
PHONE: 512-418-1771

HYDRAULIC DATA
INLETS
SHEET 1 OF 2
ANDERSON MILL ROAD PHASE 2

CEDAR PARK

FILENAME: AMR*HYDRO*DATA*INLET25.dgn
PLOTTED: 8/5/2022 3:49:50 PM

100 YEAR ON GRADE INLET AND SAG CONFIGURATION DATA

| INLET ID | INLET TYPE | INLET LOCATION | STATION | OFFSET | RIM | INVERT | GROUND ELEV | DRAINAGE AREA ID | INLET DISCHARGE | CARRY-OVER FLOW (QPASS) | BYPASS NODE | TOTAL RUNOFF (QA) | SLOPE | GUTTER DEPRESSION (in) | PONDED DEPTH (in) | PONDED WIDTH | L (length of inlet) |
|---|---|---|---|---|---|---|---|---|---|---|---|---|---|---|---|---|---|
| P-D26 | TY II R | On Grade | 124+49.04 | -29.00 | 1031.16 | 1027.50 | 1029.42 | PC-D26 | 3.83 | 1.75 | D51 | 7.25 | 1.82 | 4 | 2.6 | 11 | 11.5 |
| P-D28(A) | TY II R | On Grade | 125+98.85 | -29.00 | 1034.13 | 1030.47 | 1032.79 | PC-D28(A) | 4.6 | 3.42 | P-D26 | 8 | 2 | 4 | 3 | 12.4 | 11.5 |
| P-D28(B) | TY II R | On Grade | 126+98.57 | -29.00 | 1036.14 | 1032.48 | 1034.90 | PC-D28(B) | 4.6 | 3.4 | P-D28A | 8.74 | 2 | 4 | 3 | 12.4 | 11.5 |
| P-D30 | TY II R | On Grade | 128+00.00 | -29.00 | 1038.12 | 1034.46 | 1037.05 | PC-D30 | 4.69 | 3.43 | P-D28B | 6.89 | 1.87 | 4 | 3 | 12.6 | 11.5 |
| P-D32 | TY II R | On Grade | 130+00.11 | -29.07 | 1040.91 | 1037.25 | 1040.03 | PC-D32 | 5.01 | 2.2 | P-D30 | 6.39 | 0.87 | 4 | 3.3 | 13.9 | 11.5 |
| P-D34 (A) | TY II R | On Grade | 132+00.09 | -35.00 | 1042.06 | 1038.39 | 1042.93 | PC-D34 (A) | 5.1 | 1.38 | P-D32 | 6.16 | 0.52 | 4 | 3.5 | 14.7 | 11.5 |
| P-D34 (B) | TY II R | On Grade | 133+00.19 | -35.00 | 1042.56 | 1038.90 | 1043.51 | PC-D34 (B) | 5 | 1.28 | P-D34(A) | 5.06 | 0.52 | 4 | 3.5 | 14.6 | 11.5 |
| P-D36 | TY II R | On Grade | 134+26.92 | -35.00 | 1043.22 | 1039.56 | 1044.10 | PC-D36 | 2.99 | 0.06 | P-D34(B) | 3.02 | 0.52 | 4 | 2.7 | 11.1 | 11.5 |
| P-D38 | TY II R | On Grade | 136+26.91 | -35.00 | 1044.26 | 1040.60 | 1044.11 | PC-D38 | 2.84 | 0.03 | P-D36 | 2.97 | 0.52 | 4 | 2.6 | 10.9 | 11.5 |
| P-D40 | TY II R | On Grade | 138+00.01 | -35.00 | 1045.16 | 1041.50 | 1044.83 | PC-D40 | 3.26 | 0.13 | P-D38 | 3.97 | 0.52 | 4 | 2.8 | 11.6 | 11.5 |
| P-D41 | TY II R | On Grade | 137+99.87 | -32.92 | 1045.25 | 1041.59 | 1044.76 | PC-D41 | 2.6 | 0 | * | 2.6 | 0.52 | 4 | 2.5 | 10.5 | 11.5 |
| P-D42 | TY II R | On Grade | 140+00.46 | -35.00 | 1046.25 | 1042.59 | 1045.44 | PC-D42 | 4.36 | 0.71 | P-D40 | 4.36 | 0.52 | 4 | 3.2 | 13.4 | 11.5 |
| P-D43 | TY II R | On Grade | 139+90.69 | -35.00 | 1046.28 | 1042.62 | 1045.35 | PC-D43 | 4.27 | 0.65 | P-D41 | 4.27 | 0.52 | 4 | 3.2 | 13.3 | 11.5 |
| P-D44 | TY II R | On Grade | 141+62.65 | -5.00 | 1047.61 | 1043.95 | 1047.19 | PC-D44 | 1.64 | 0 | * | 1.64 | 0.59 | 4 | 2.1 | 8.6 | 11.5 |
| P-E17 | TY II R | On Grade | 144+62.14 | -48.58 | 1050.73 | 1047.07 | 1050.28 | PC-E17 | 3.42 | 1.04 | * | 3.96 | 1.62 | 4 | 2.5 | 10.4 | 11.5 |
| P-E19 | TY II R | On Grade | 147+04.13 | -42.09 | 1054.74 | 1051.08 | 1054.70 | PC-E19 | 2.91 | 0.54 | P-E17 | 3.13 | 1.62 | 4 | 2.3 | 9.4 | 11.5 |
| P-E21 | TY II R | On Grade | 149+53.80 | -35.00 | 1058.91 | 1055.25 | 1057.97 | PC-E21 | 2.43 | 0.22 | P-E19 | 2.78 | 1.62 | 4 | 2 | 8.5 | 11.5 |
| P-E23 | TY II R | On Grade | 152+00.71 | -35.00 | 1062.94 | 1059.27 | 1061.78 | PC-E23 | 2.64 | 0.35 | P-E21 | 3.03 | 1.62 | 4 | 2.1 | 8.9 | 11.5 |
| P-E25 | TY II R | On Grade | 154+99.94 | -35.00 | 1067.94 | 1064.28 | 1066.92 | PC-E25 | 2.71 | 0.39 | P-E23 | 2.71 | 1.62 | 4 | 2.2 | 9 | 11.5 |
| P-F07 | Type 1-R | On Grade | 159+70.80 | -35.00 | 1071.09 | 1067.20 | 1070.13 | PC-F07 | 0.82 | 0 | * | 0.82 | 1.63 | 6.3 | 1.3 | 5.5 | 11 |
| P-F10 | Type 1-R | On Grade | 161+90.00 | -35.00 | 1066.41 | 1062.52 | 1065.62 | PC-F10 | 2.57 | 0.02 | P-F07 | 2.57 | 1.41 | 6.3 | 2.1 | 8.7 | 11 |
| P-F11 (A) | Type 1-R | In Sag | 163+23.34 | -35.00 | 1065.57 | 1061.68 | 1064.50 | PC-F11(B) | 3.44 | 0 | P-F10 | 3.46 | 0.08 | 6.3 | 9.1 | 12 | 11 |
| P-F11 (B) | Type 1-R | On Grade | 163+99.95 | -35.00 | 1065.66 | 1061.77 | 1064.56 | PC-F11(A) | 1.51 | 0 | * | 1.51 | 0.3 | 6.3 | 2.3 | 9.5 | 11 |

| NO | DATE | ISSUES AND REVISIONS |
|---|---|---|

STATE OF TEXAS
AUSTIN S. HELTON
124922
LICENSED
PROFESSIONAL ENGINEER

8/5/2022

Kimley»Horn F-928
10814 JOLLYVILLE ROAD
BLDG. 4, STE 200
AUSTIN, TX 78759
PHONE: 512-418-1771

HYDRAULIC DATA
INLETS
SHEET 2 OF 2
ANDERSON MILL ROAD PHASE 2

CEDAR PARK



FILENAME: AMR*HYDRO*DATA*INLET100.dgn
PLOTTED: 8/5/2022 3:49:59 PM

25 YEAR - CONVEYANCE CONFIGURATION DATA

| PIPE ID | START NODE | STOP NODE | INVERT (START) (ft) | INVERT (STOP) (ft) | LENGTH | MATERIAL | SECTION TYPE | DIAMETER (in) | MANNING'S n | FLOW (cfs) | VELOCITY (ft/s) | DEPTH (OUT) (ft) | CAPACITY (FULL FLOW) (cfs) | DEPTH (%) | DEPTH IN (ft) | VELOCITY IN (ft/s) | VELOCITY OUT (ft/s) | HGL IN (ft) | HGL OUT (ft) |
|---|---|---|---|---|---|---|---|---|---|---|---|---|---|---|---|---|---|---|---|
| PLINE-D26 | P-D26 | PLUG (D26) | 1,027.50 | 1026.62 | 6.40 | Concrete | Circle | 18 | 0.012 | 2.33 | 12.81 | 0.68 | 42.19 | 16 | 0.58 | 3.72 | 3.01 | 1,028.08 | 1,027.30 |
| PLINE-D28(A) | P-D28(A) | PLUG (D28) | 1,030.47 | 1029.06 | 8.40 | Concrete | Circle | 18 | 0.012 | 6.32 | 18.43 | 1.16 | 46.62 | 24.9 | 0.97 | 5.21 | 4.31 | 1,031.44 | 1,030.22 |
| PLINE-D28(B) | P-D28(B) | P-D28(A) | 1,032.48 | 1030.47 | 99.70 | Concrete | Circle | 18 | 0.012 | 3.19 | 7.11 | 0.97 | 16.16 | 30.1 | 0.68 | 4.1 | 2.63 | 1,033.16 | 1,031.44 |
| PLINE-D30 | P-D30 | PLUG (D30) | 1,034.46 | 1033.32 | 30.80 | Concrete | Circle | 18 | 0.012 | 3.43 | 9.03 | 0.88 | 21.89 | 26.8 | 0.71 | 4.19 | 3.18 | 1,035.17 | 1,034.20 |
| PLINE-D32 | P-D32 | PLUG (D32) | 1,037.27 | 1036.24 | 33.10 | Concrete | Circle | 18 | 0.012 | 3.61 | 8.55 | 0.82 | 19.88 | 28.9 | 0.73 | 4.26 | 3.65 | 1,037.98 | 1,037.06 |
| PLINE-D34(B) | P-D34(B) | P-D34(A) | 1,038.90 | 1038.39 | 100.00 | Concrete | Circle | 18 | 0.012 | 3.34 | 4.37 | 1.01 | 8.13 | 44.7 | 0.7 | 4.16 | 2.64 | 1,039.60 | 1,039.40 |
| PLINE-D34(A) | P-D34(A) | PLUG (D34) | 1,038.39 | 1037.47 | 40.50 | Concrete | Circle | 18 | 0.012 | 6.83 | 9.15 | 1.7 | 17.15 | 43.9 | 1.01 | 5.39 | 3.86 | 1,039.40 | 1,039.17 |
| PLINE-D36 | P-D36 | PLUG (D36) | 1,039.56 | 1038.60 | 42.00 | Concrete | Circle | 18 | 0.012 | 2.16 | 6.65 | 0.68 | 17.2 | 23.9 | 0.56 | 3.63 | 2.8 | 1,040.11 | 1,039.28 |
| PLINE-D38 | P-D38 | PLUG (D38) | 1,040.60 | 1039.64 | 42.30 | Concrete | Circle | 18 | 0.012 | 1.95 | 6.44 | 0.77 | 17.14 | 22.8 | 0.53 | 3.53 | 2.15 | 1,041.13 | 1,040.41 |
| PLINE-D40 | P-D40 | PLUG (D40) | 1,041.50 | 1040.55 | 29.90 | Concrete | Circle | 18 | 0.012 | 2.12 | 7.44 | 0.34 | 20.28 | 21.8 | 0.55 | 3.61 | 7.1 | 1,042.05 | 1,040.89 |
| PLINE-D41 | PLUG (D41) | P-D41 | 1,040.65 | 1041.59 | 4.70 | Concrete | Circle | 18 | 0.012 | 1.9 | 13.75 | 1.37 | 50.89 | 13.2 | 0.52 | 3.5 | 1.12 | 1,042.11 | 1,042.02 |
| PLINE-D42 | P-D42 | PLUG (D42) | 1,042.59 | 1041.69 | 43.20 | Concrete | Circle | 18 | 0.012 | 3.42 | 7.34 | 0.96 | 16.42 | 31 | 0.7 | 4.19 | 2.86 | 1,043.29 | 1,042.65 |
| PLINE-D43 | D-20 | P-D43 | 1,041.85 | 1042.62 | 10.40 | Concrete | Circle | 18 | 0.012 | 3.35 | 11.47 | 0.41 | 30.96 | 22.2 | 0.7 | 4.16 | 8.48 | 1,043.32 | 1,042.26 |
| PLINE-D44 | PLUG (D42) | P-D44 | 1,041.69 | 1043.95 | 190.70 | Concrete | Circle | 18 | 0.012 | 1.2 | 4.44 | 0.96 | 12.39 | 21 | 0.41 | 3.07 | 1 | 1,044.36 | 1,042.65 |
| PLINE-E17 | P-E17 | PLUG (E17) | 1,047.07 | 1046.22 | 4.20 | Concrete | Circle | 18 | 0.012 | 2.63 | 15.22 | 0.92 | 51.19 | 15.4 | 0.62 | 3.86 | 2.33 | 1,047.69 | 1,047.14 |
| PLINE-E19 | P-E19 | PLUG (E19) | 1,051.08 | 1050.19 | 7.10 | Concrete | Circle | 18 | 0.012 | 2.21 | 12.22 | 0.59 | 40.29 | 15.9 | 0.56 | 3.66 | 3.4 | 1,051.64 | 1,050.78 |
| PLINE-E21 | P-E21 | PLUG (E21) | 1,055.25 | 1054.32 | 7.70 | Concrete | Circle | 18 | 0.012 | 1.71 | 11.17 | 0.26 | 39.55 | 14.1 | 0.49 | 3.39 | 8.41 | 1,055.74 | 1,054.58 |
| PLINE-E23 | P-E23 | PLUG (E23) | 1,059.27 | 1058.36 | 7.90 | Concrete | Circle | 18 | 0.012 | 1.93 | 11.39 | 0.94 | 38.62 | 15.2 | 0.52 | 3.52 | 1.66 | 1,059.79 | 1,059.30 |
| PLINE-E25 | P-E25 | PLUG (E25) | 1,064.28 | 1063.22 | 2.00 | Concrete | Circle | 18 | 0.012 | 2.14 | 20.04 | 0.6 | 82.84 | 11.1 | 0.55 | 3.62 | 3.25 | 1,064.83 | 1,063.82 |
| PLINE-F07 | F08 | P-F07 | 1,064.37 | 1067.20 | 213.20 | Concrete | Circle | 18 | 0.012 | 0.6 | 4.49 | 0.57 | 16.86 | 12.9 | 0.29 | 2.54 | 0.96 | 1,067.49 | 1,063.09 |
| PLINE-F10 | P-F10 | F12 | 1,062.52 | 1062.59 | 131.70 | Concrete | Circle | 18 | 0.012 | 2.3 | 4.29 | 1.29 | 9.09 | 34.3 | 0.57 | 3.7 | 1.42 | 1,063.09 | 1,062.97 |
| PLINE-F11(A) | P-F11(A) | P-F11(B) | 1,061.68 | 1061.77 | 76.60 | Concrete | Circle | 18 | 0.012 | 4.57 | 2.59 | 0.9 | 3.9 | (N/A) | 1.29 | 2.83 | 4.11 | 1,062.97 | 1,062.67 |
| PLINE-F11(B) | P-F11(B) | MH-F11 | 1,061.77 | 1053.37 | 40.00 | Concrete | Circle | 18 | 0.012 | 5.5 | 19.17 | 1.67 | 52.16 | 21.9 | 0.9 | 4.94 | 3.11 | 1,062.67 | 1,055.03 |

| NO | DATE | ISSUES AND REVISIONS |
|---|---|---|

STATE OF TEXAS
AUSTIN S. HELTON
124922
LICENSED
PROFESSIONAL ENGINEER
8/5/2022

Kimley»Horn F-928
10814 JOLLYVILLE ROAD
BLDG. 4, STE 200
AUSTIN, TX 78759
PHONE: 512-418-1771

HYDRAULIC DATA
LINKS
SHEET 1 OF 2
ANDERSON MILL ROAD PHASE 2

CEDAR PARK



FILENAME: AMR*HYDRO*DATA*LINKS25.dgn
PLOTTED: 8/5/2022 3:50:06 PM

100 YEAR - CONVEYANCE CONFIGURATION DATA

| PIPE ID | START NODE | STOP NODE | INVERT (START) (ft) | INVERT (STOP) (ft) | LENGTH | MATERIAL | SECTION TYPE | DIAMETER (in) | MANNING'S n | FLOW (cfs) | VELOCITY (ft/s) | DEPTH (OUT) (ft) | CAPACITY (FULL FLOW) (cfs) | DEPTH (%) | DEPTH IN (ft) | VELOCITY IN (ft/s) | VELOCITY OUT (ft/s) | HGL IN (ft) | HGL OUT (ft) |
|---|---|---|---|---|---|---|---|---|---|---|---|---|---|---|---|---|---|---|---|
| PLINE-D26 | P-D26 | PLUG (D26) | 1,027.50 | 1026.62 | 6.40 | Concrete | Circle | 18 | 0.012 | 3.83 | 14.84 | 0.93 | 42.19 | 20.4 | 0.75 | 4.35 | 3.32 | 1,028.25 | 1,027.55 |
| PLINE-D28(A) | P-D28(A) | PLUG (D28) | 1,030.47 | 1029.06 | 8.40 | Concrete | Circle | 18 | 0.012 | 9.2 | 20.52 | 1.5 | 46.62 | 30.1 | 1.17 | 6.21 | 5.21 | 1,031.64 | 1,030.56 |
| PLINE-D28(B) | P-D28(B) | P-D28(A) | 1,032.48 | 1030.47 | 99.70 | Concrete | Circle | 18 | 0.012 | 4.6 | 7.88 | 1.17 | 16.16 | 36.5 | 0.82 | 4.63 | 3.1 | 1,033.30 | 1,031.64 |
| PLINE-D30 | P-D30 | PLUG (D30) | 1,034.46 | 1033.32 | 30.80 | Concrete | Circle | 18 | 0.012 | 4.69 | 9.86 | 1.18 | 21.89 | 31.4 | 0.83 | 4.66 | 3.15 | 1,035.29 | 1,034.50 |
| PLINE-D32 | P-D32 | PLUG (D32) | 1,037.27 | 1036.24 | 33.10 | Concrete | Circle | 18 | 0.012 | 5.01 | 9.37 | 1.1 | 19.88 | 34.2 | 0.86 | 4.77 | 3.62 | 1,038.11 | 1,037.34 |
| PLINE-D34(B) | P-D34(B) | P-D34(A) | 1,038.90 | 1038.39 | 100.00 | Concrete | Circle | 18 | 0.012 | 5 | 4.83 | 1.47 | 8.13 | 56.7 | 1.07 | 3.7 | 2.84 | 1,039.97 | 1,039.86 |
| PLINE-D34(A) | P-D34(A) | PLUG (D34) | 1,038.39 | 1037.47 | 40.50 | Concrete | Circle | 18 | 0.012 | 9.25 | 9.89 | 2.13 | 17.15 | 52.3 | 1.47 | 5.25 | 5.23 | 1,039.86 | 1,039.60 |
| PLINE-D36 | P-D36 | PLUG (D36) | 1,039.56 | 1038.60 | 42.00 | Concrete | Circle | 18 | 0.012 | 2.99 | 7.31 | 1.46 | 17.2 | 28.2 | 0.66 | 4.01 | 1.71 | 1,040.22 | 1,040.06 |
| PLINE-D38 | P-D38 | PLUG (D38) | 1,040.60 | 1039.64 | 42.30 | Concrete | Circle | 18 | 0.012 | 2.84 | 7.18 | 1.57 | 17.14 | 27.5 | 0.64 | 3.95 | 1.6 | 1,041.24 | 1,041.21 |
| PLINE-D40 | P-D40 | PLUG (D40) | 1,041.50 | 1040.55 | 29.90 | Concrete | Circle | 18 | 0.012 | 3.26 | 8.42 | 1.29 | 20.28 | 27.1 | 0.69 | 4.12 | 2.02 | 1,042.19 | 1,041.84 |
| PLINE-D41 | PLUG (D41) | P-D41 | 1,040.65 | 1041.59 | 4.70 | Concrete | Circle | 18 | 0.012 | 2.6 | 15.1 | 1.77 | 50.89 | 15.4 | 0.7 | 3.18 | 1.47 | 1,042.29 | 1,042.42 |
| PLINE-D42 | P-D42 | PLUG (D42) | 1,042.59 | 1041.69 | 43.20 | Concrete | Circle | 18 | 0.012 | 4.36 | 7.85 | 2.03 | 16.42 | 35.2 | 1.14 | 3.01 | 2.47 | 1,043.73 | 1,043.72 |
| PLINE-D43 | D-20 | P-D43 | 1,041.85 | 1042.62 | 10.40 | Concrete | Circle | 18 | 0.012 | 4.27 | 12.3 | 1.73 | 30.96 | 25.1 | 0.79 | 4.51 | 2.42 | 1,043.41 | 1,043.58 |
| PLINE-D44 | PLUG (D42) | P-D44 | 1,041.69 | 1043.95 | 190.70 | Concrete | Circle | 18 | 0.012 | 1.64 | 4.87 | 2.03 | 12.39 | 24.6 | 0.48 | 3.35 | 0.93 | 1,044.43 | 1,043.72 |
| PLINE-E17 | P-E17 | PLUG (E17) | 1,047.07 | 1046.22 | 4.20 | Concrete | Circle | 18 | 0.012 | 3.42 | 16.46 | 1.24 | 51.19 | 17.5 | 0.71 | 4.19 | 2.19 | 1,047.78 | 1,047.46 |
| PLINE-E19 | P-E19 | PLUG (E19) | 1,051.08 | 1050.19 | 7.10 | Concrete | Circle | 18 | 0.012 | 2.91 | 13.24 | 0.92 | 40.29 | 18.2 | 0.65 | 3.98 | 2.55 | 1,051.73 | 1,051.11 |
| PLINE-E21 | P-E21 | PLUG (E21) | 1,055.25 | 1054.32 | 7.70 | Concrete | Circle | 18 | 0.012 | 2.43 | 12.41 | 0.88 | 39.55 | 16.8 | 0.59 | 3.77 | 2.26 | 1,055.84 | 1,055.20 |
| PLINE-E23 | P-E23 | PLUG (E23) | 1,059.27 | 1058.36 | 7.90 | Concrete | Circle | 18 | 0.012 | 2.64 | 12.5 | 1.05 | 38.62 | 17.7 | 0.62 | 3.86 | 1.99 | 1,059.89 | 1,059.42 |
| PLINE-E25 | P-E25 | PLUG (E25) | 1,064.28 | 1063.22 | 2.00 | Concrete | Circle | 18 | 0.012 | 2.71 | 21.55 | 0.68 | 82.84 | 12.4 | 0.62 | 3.89 | 3.48 | 1,064.90 | 1,063.90 |
| PLINE-F07 | F08 | P-F07 | 1,064.37 | 1067.20 | 213.20 | Concrete | Circle | 18 | 0.012 | 0.82 | 4.94 | 0.69 | 16.86 | 15 | 0.34 | 2.77 | 1.03 | 1,067.54 | 1,063.21 |
| PLINE-F10 | P-F10 | F12 | 1,062.52 | 1062.59 | 131.70 | Concrete | Circle | 18 | 0.012 | 3.3 | 4.73 | 1.56 | 9.09 | 41.6 | 0.69 | 4.14 | 1.87 | 1,063.21 | 1,063.24 |
| PLINE-F11(A) | P-F11(A) | P-F11(B) | 1,061.68 | 1061.77 | 76.60 | Concrete | Circle | 18 | 0.012 | 6.51 | 3.69 | 1.09 | 3.9 | (N/A) | 1.56 | 3.69 | 4.76 | 1,063.24 | 1,062.86 |
| PLINE-F11(B) | P-F11(B) | MH-F11 | 1,061.77 | 1053.37 | 40.00 | Concrete | Circle | 18 | 0.012 | 7.84 | 21.25 | 1.88 | 52.16 | 26.2 | 1.09 | 5.73 | 4.44 | 1,062.86 | 1,055.24 |

| NO | DATE | ISSUES AND REVISIONS |
|---|---|---|

STATE OF TEXAS
AUSTIN S. HELTON
124922
LICENSED
PROFESSIONAL ENGINEER
8/5/2022

Kimley»Horn F-928
10814 JOLLYVILLE ROAD
BLDG. 4, STE 200
AUSTIN, TX 78759
PHONE: 512-418-1771

HYDRAULIC DATA
LINKS
SHEET 2 OF 2
ANDERSON MILL ROAD PHASE 2

CEDAR PARK

FILENAME: AMR*HYDRO*DATA*LINKS100.dgn
PLOTTED: 8/5/2022 3:50:13 PM

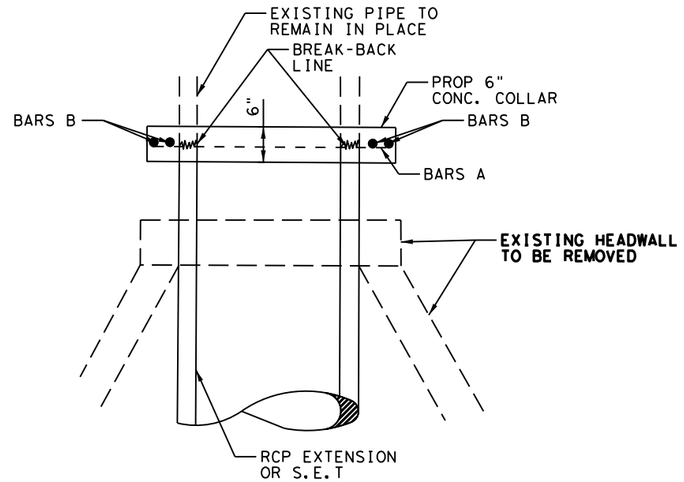


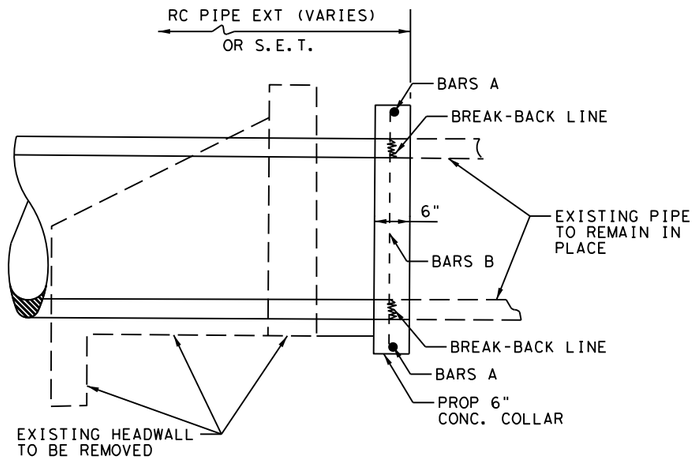


LONGITUDINAL ELEVATION

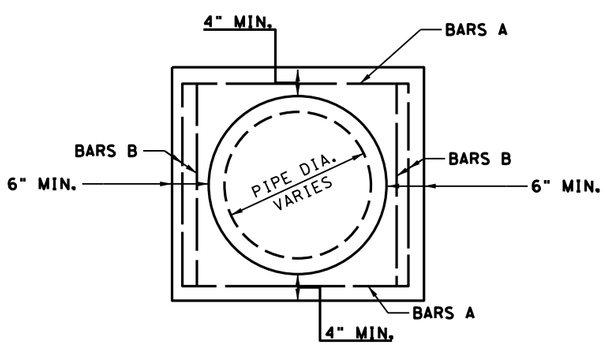


END VIEW

NOTE:

A CL C CONCRETE COLLAR SHALL BE USED AT LOCATIONS AS SHOWN ON THE PLANS WHERE ONLY THE EXISTING HEADWALL OR LESS THAN A FULL JOINT OF PIPE IS TO BE REMOVED PRIOR TO THE INSTALLATION OF THE CULVERT EXTENSION. A CONCRETE COLLAR SHALL BE USED AT ALL 15, 30, & 45 DEGREE PIPE BEND JOINT CONNECTIONS. REINFORCING STEEL (BARS A& B) SHALL BE #4 BARS CUT IN THE FIELD TO FIT. CONCRETE COLLAR SHALL CONFORM TO OUTSIDE DIAMTER OF PIPE CULVERTS.

| NO | DATE | ISSUES AND REVISIONS |
|---|---|---|

STATE OF TEXAS
AUSTIN S. HELTON
124922
LICENSED
PROFESSIONAL ENGINEER
8/5/2022

Kimley»Horn F-928
10814 JOLLYVILLE ROAD
BLDG. 4, STE 200
AUSTIN, TX 78759
PHONE: 512-418-1771

DRAINGE COLLAR DETAIL

SHEET 1 OF 1

ANDERSON MILL ROAD PHASE 2

CEDAR PARK



FILENAME: AMR*DRG*COLLAR*DET.dgn
PLOTTED: 8/5/2022 3:50:19 PM

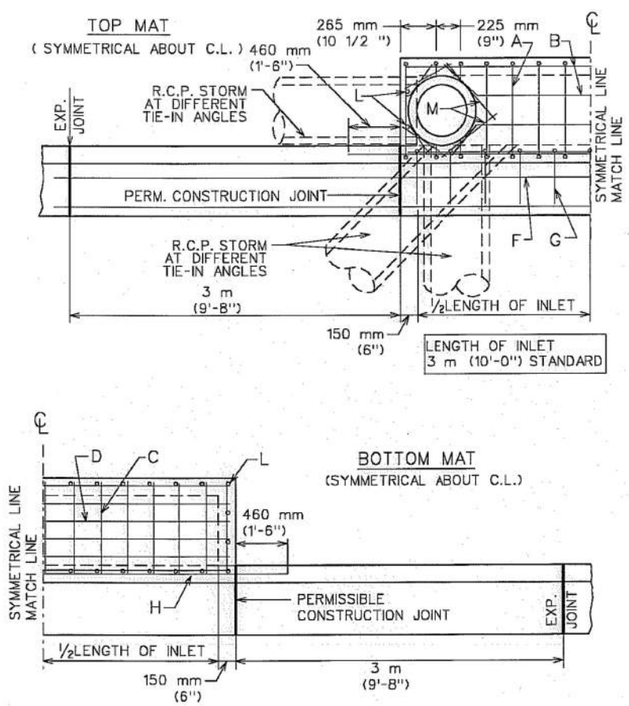


| CITY OF AUSTIN DEPARTMENT OF PUBLIC WORKS | TYPICAL DETAILS FOR CURB INLET | |
|---|---|---|
| Bill Gardner 12/9/08 ADOPTED | THE ARCHITECT/ENGINEER ASSUMES RESPONSIBILITY FOR APPROPRIATE USE OF THIS STANDARD. | STANDARD NO. 508S-3 1 OF 4 |

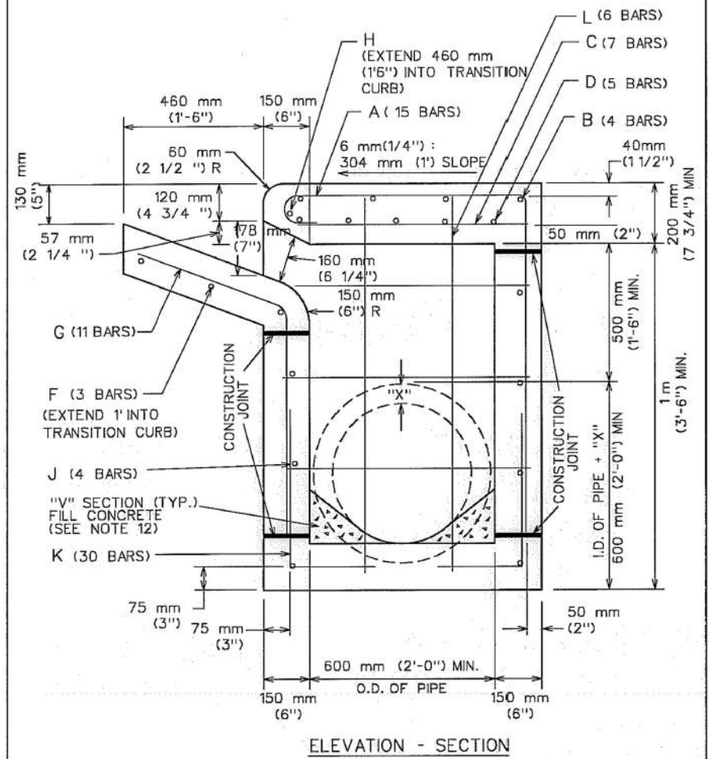


ELEVATION - SECTION

| CITY OF AUSTIN DEPARTMENT OF PUBLIC WORKS | TYPICAL DETAILS FOR CURB INLET | |
|---|---|---|
| Bill Gardner 12/9/08 ADOPTED | THE ARCHITECT/ENGINEER ASSUMES RESPONSIBILITY FOR APPROPRIATE USE OF THIS STANDARD. | STANDARD NO. 508S-3 2 OF 4 |

TABLE OF QUANTITIES
FOR 18" OUTLET PIPE
REINFORCING STEEL QUANTITIES

| BARS | SIZE | SPACING | NUMBER | LENGTH | WEIGHT |
|---|---|---|---|---|---|
| | | | | | |
| A | 4 | 230mm (9")* | 15 | 2 m (7'-0") | 73 |
| B | 4 | 250 mm (10") | 4 | 3.25 m (10'-8") | 29 |
| C | 4 | 460 mm (18") | 7 | 760 mm (2'-6") | 12 |
| D | 6 | 150 mm (6") | 5 | 3.25 m (10'-8") | 80 |
| E | 4 | 300 mm (12") | 6 | 760 mm (2'-6") | 10 |
| F | 4 | 250 mm (10") | 3 | 4 m (13'-0") | 35 |
| G | 4 | 300 mm (12") | 11 | 1.25 m (4'-3") | 31 |
| H | 6 | - | 1 | 4.25 m (14'-0") | 20 |
| J | 4 | 300 mm (12") | 7 | 3.25 m (10'-8") | 50 |
| K | 4 | 230 mm (9")* | 30 | 800 mm (2'-7 1/2") | 52 |
| L | 4 | 300 mm (12")* | 6 | 1.3 m (4'-4") | 17 |
| M | 4 | - | 4 | 500 mm (1'-8") AVG | 4 |
| | | | | | |
| TOTAL STEEL, LB. | | | | | 413 |
| TOTAL CONCRETE, C.Y. | | | | | 4.06 |
| * EXCEPT AS SHOWN ON PLAN | | | | | |

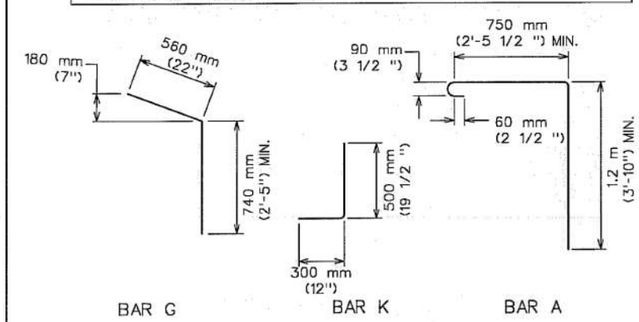


| CITY OF AUSTIN DEPARTMENT OF PUBLIC WORKS | TYPICAL DETAILS FOR CURB INLET | |
|---|---|---|
| Bill Gardner 12/9/08 ADOPTED | THE ARCHITECT/ENGINEER ASSUMES RESPONSIBILITY FOR APPROPRIATE USE OF THIS STANDARD. | STANDARD NO. 508S-3 3 OF 4 |

| NO | DATE | ISSUES AND REVISIONS |
|---|---|---|
| | | |

Kimley»Horn F-928
10814 JOLLYVILLE ROAD
BLDG. 4, STE 200
AUSTIN, TX 78759
PHONE: 512-418-1771

STANDARD DETAILS
DRAINAGE
SHEET 1 OF 4
ANDERSON MILL ROAD PHASE 2

CEDAR PARK



FILENAME: AMR*STD*DRG*01.dgn
PLOTTED: 8/5/2022 3:50:29 PM

NOTES:

1. ALL CONCRETE SHALL BE CLASS "A"
2. ALL REINFORCING STEEL SHALL BE GRADE 60
3. DIMENSIONS RELATING TO REINFORCING STEEL ARE TO CENTERS OF BARS.
4. VERTICAL STEEL MAY BE SPLICED (380 mm or 15" MIN. LAP) IN THE LOWER ONE-HALF OF ALL INLET WALLS.5. IN AREAS OF CONFLICT BETWEEN REINFORCING STEEL, PIPES AND MANHOLE FRAME, THE REINFORCEMENT SHALL BE BENT OR ADJUSTED TO CLEAR AS DIRECTED BY THE ENGINEER.
6. QUANTITIES SHOWN HEREON ARE FOR THE CONTRACTOR'S INFORMATION ONLY. PAYMENT WILL BE MADE FOR EACH INLET OF THE TYPE SPECIFIED, COMPLETE IN PLACE INCLUDING MANHOLE FRAME AND OVER.
7. CHAMFER ALL EXPOSED EDGES 20 mm (3/4 ").
8. MANHOLE FRAME AND COVER SHALL BE IN ACCORDANCE WITH CITY OF AUSTIN STANDARD 503S-1.
9. THE CONTRACTOR MAY PROPOSE ALTERNATE PROCEDURES FOR THE CONSTRUCTION OF INLETS, INCLUDING PRECAST UNITS. PLANS FOR SUCH PROPOSED ALTERNATES SHALL BE SUBMITTED TO THE ENGINEER FOR REVIEW AND APPROVAL BEFORE CONSTRUCTION.
10. ALL INLET WALLS SHALL BE FORMED EXCEPT WHERE THE NATURE OF THE SURROUNDING MATERIAL IS SUCH THAT IT CAN BE TRIMMED TO A SMOOTH VERTICAL FACE. WHEN INLET WALLS ARE PLACED TO NEAT EXCAVATION LINES THE WALL THICKNESS SHALL NOT EXCEED 10 INCHES.
11. PAYMENT FOR INLET AT THE CONTRACT PRICE SHALL INCLUDE THE TRANSITION CURB.
12. INVERT OF INLET SHALL BE SLOPED 1:20 WITH FILL CONCRETE, SHAPED AS "V" SECTION
13. NO SPLICING OF REINFORCING STEEL SHALL BE PERMITTED UNLESS OTHERWISE NOTED ON THE PLANS OR PERMITTED IN WRITING BY THE ENGINEER.

REFERENCES:

FOR EXPANSION JOINT DOWEL AND DOWEL LOCATION DETAILS
SEE STD. 430S-3, "CURB EXPANSION JOINT DOWEL DETAIL".

FOR 18" MANHOLE FRAME AND COVER DETAILS
SEE STD. 503S-1, "18" COVER AND FRAME".

| CITY OF AUSTIN<br>DEPARTMENT OF PUBLIC WORKS | TYPICAL DETAILS FOR CURB INLET | |
|---|---|---|
| Bill Gardner 12/9/08<br>ADOPTED | THE ARCHITECT/ENGINEER ASSUMES RESPONSIBILITY FOR APPROPRIATE USE OF THIS STANDARD. | STANDARD NO.<br>508S-3<br>4 OF 4 |

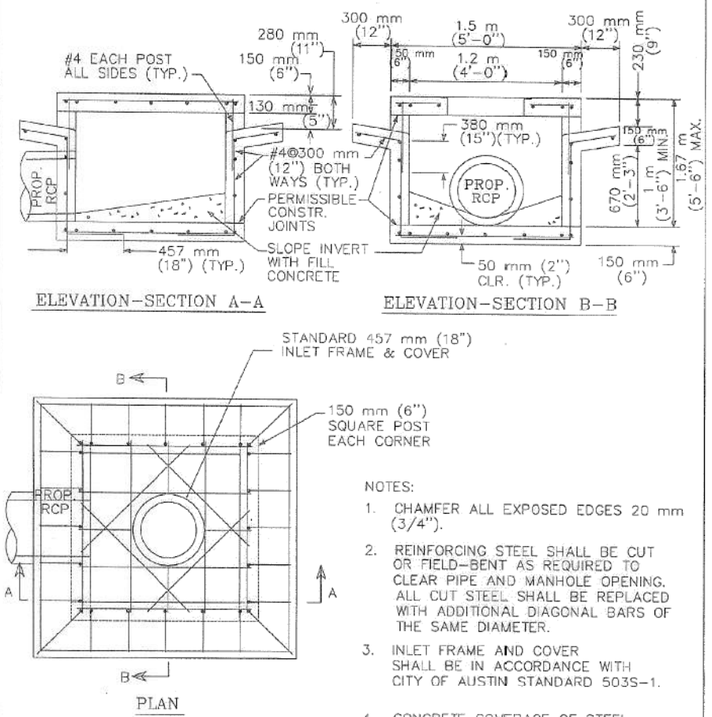


N.T.S.

NOTES:

1. CHAMFER ALL EXPOSED EDGES 20 mm (3/4").
2. REINFORCING STEEL SHALL BE CUT OR FIELD-BENT AS REQUIRED TO CLEAR PIPE AND MANHOLE OPENING. ALL CUT STEEL SHALL BE REPLACED WITH ADDITIONAL DIAGONAL BARS OF THE SAME DIAMETER.
3. INLET FRAME AND COVER SHALL BE IN ACCORDANCE WITH CITY OF AUSTIN STANDARD 503S-1.
4. CONCRETE COVERAGE OF STEEL SHALL BE 50 mm (2") MIN. AT ALL SURFACES.
5. ANY MODIFICATION TO THIS STANDARD SHALL BE THE RESPONSIBILITY OF THE DESIGN ENGINEER.

| CITY OF AUSTIN<br>WATERSHED PROTECTION DEPARTMENT | 4-SIDED AREA INLET | |
|---|---|---|
| Arthur C. Rowe, P.E. 8/18/2010<br>ADOPTED | THE ARCHITECT/ENGINEER ASSUMES RESPONSIBILITY FOR APPROPRIATE USE OF THIS STANDARD | STANDARD NO.<br>508S-9 |

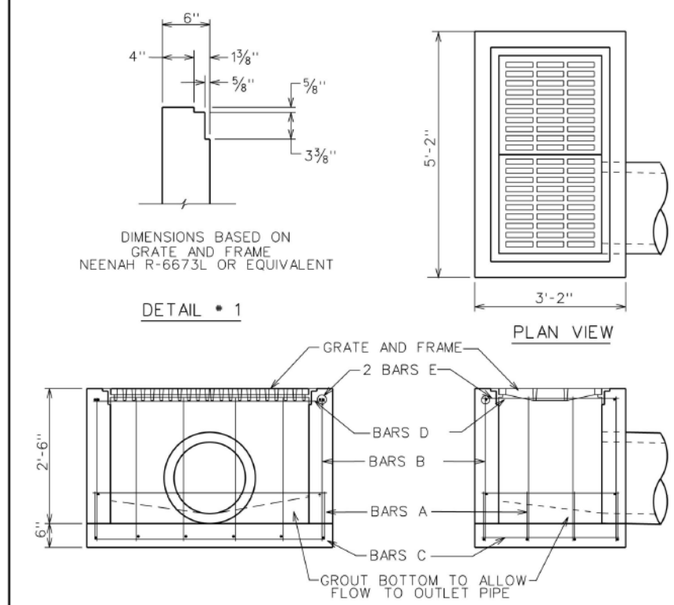


| REINFORCING STEEL SCHEDULE | | | | | |
|---|---|---|---|---|---|
| BAR | QTY | SIZE | SPACING | LENGTH | WEIGHT |
| A | 4 | 4 | 12" | 6'-8" | 18 |
| B | 16 | 4 | 12" | 3'-0" | 32 |
| C | 8 | 4 | 12" | 2'-10" | 15 |
| D | 4 | 4 | 12" | 5'-2" | 14 |
| E | 4 | 5 | 12" | 2'-10" | 12 |
| TOTAL WEIGHT---91 LB. | | | | | |

| CITY OF AUSTIN<br>DEPARTMENT OF WATERSHED PROTECTION AND DEVELOPMENT REVIEW | STANDARD DROP INLET | |
|---|---|---|
| RECORD COPY SIGNED BY ALLEN BRECHER 5/24/88<br>ADOPTED | THE ARCHITECT/ENGINEER ASSUMES RESPONSIBILITY FOR APPROPRIATE USE OF THIS STANDARD. | STANDARD NO.<br>508-11 |

| NO | DATE | ISSUES AND REVISIONS |
|---|---|---|


Kimley»Horn F-928
10814 JOLLYVILLE ROAD
BLDG. 4, STE 200
AUSTIN, TX 78759
PHONE: 512-418-1771


STANDARD DETAILS
DRAINAGE
SHEET 2 OF 4
ANDERSON MILL ROAD PHASE 2

CEDAR PARK



FILENAME: AMR*STD*DRG*02.dgn
PLOTTED: 8/5/2022 3:50:47 PM

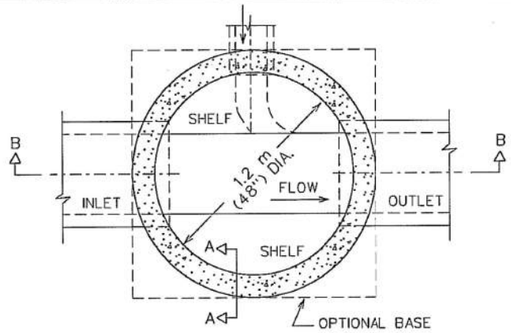


PLAN

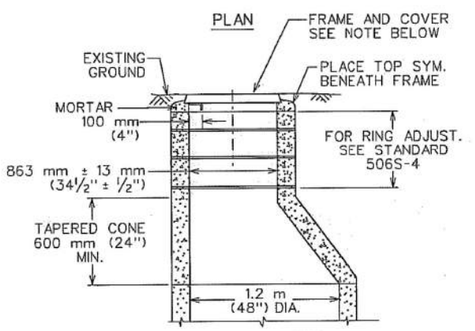


ALTERNATE SECTION
MAY BE SUBMITTED FOR APPROVAL

NOTE:
USE 800 mm (32") FRAME AND COVER.

| MINIMUM MANHOLE DIA. | MINIMUM PIPE SIZE |
|---|---|
| 1.2 m (4') | 450 TO 600 mm (18 TO 24") |
| 1.5 m (5') | 750 mm TO 1.1 m (30 TO 42") |
| 1.8 m (6') | 1.2 TO 1.4 m (48 TO 54") |
| 2.1 m (7') | 1.5 TO 1.7 m (60 TO 66") |

SIZE TO BE USED IS DEPENDENT ON DRAIN ANGLES.

| CITY OF AUSTIN<br>DEPARTMENT OF WATERSHED PROTECTION AND DEVELOPMENT REVIEW | PRE-CAST CONCRETE STORM DRAIN MANHOLE | |
|---|---|---|
| George E. Ormsbee 2/14/02<br>ADOPTED | THE ARCHITECT/ENGINEER ASSUMES RESPONSIBILITY FOR APPROPRIATE USE OF THIS STANDARD. | STANDARD NO.<br>506S-3<br>1 OF 2 |

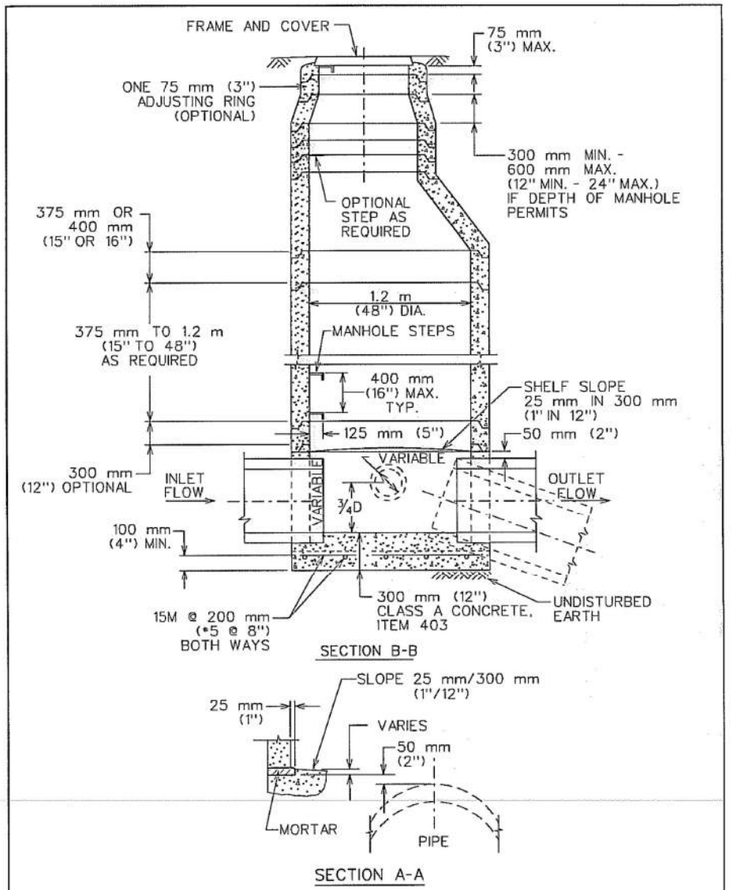


| CITY OF AUSTIN<br>DEPARTMENT OF WATERSHED PROTECTION AND DEVELOPMENT REVIEW | PRE-CAST CONCRETE STORM DRAIN MANHOLE | |
|---|---|---|
| George E. Ormsbee 2/14/02<br>ADOPTED | THE ARCHITECT/ENGINEER ASSUMES RESPONSIBILITY FOR APPROPRIATE USE OF THIS STANDARD. | STANDARD NO.<br>506S-3<br>2 OF 2 |

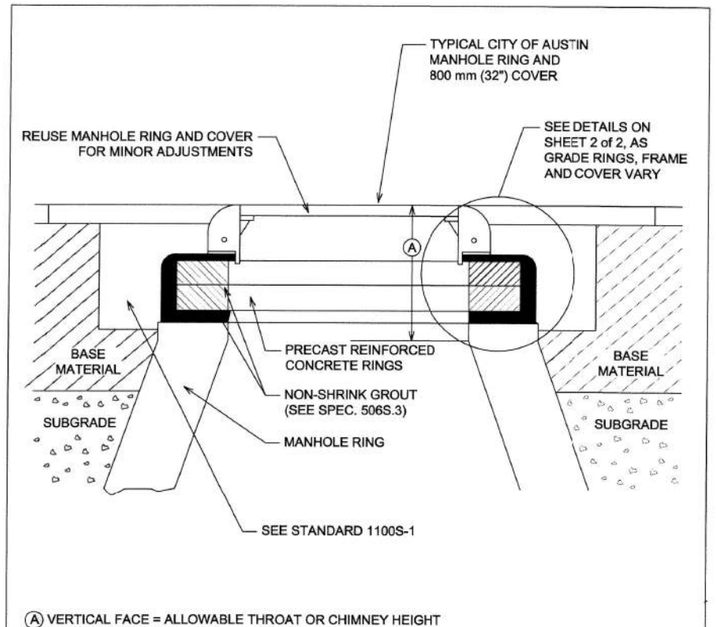


(A) VERTICAL FACE = ALLOWABLE THROAT OR CHIMNEY HEIGHT
= NEW CONSTRUCTION = 525mm = (21") Max.
= EXISTING CONSTRUCTION = 675mm (27") Max.

NOTES:
1. NON-SHRINK GROUT SHALL NOT EXCEED 25 mm (1") IN ANY DIMENSION.
2. SUB-GRADE AND BASE MATERIALS SHALL BE COMPACTED ACCORDING TO ITEMS 201S AND 210S, RESPECTIVELY, OF THE CITY OF AUSTIN STANDARD SPECIFICATIONS.
3. REFER TO STANDARD 1100S-1 FOR REPAIRS AROUND MANHOLES.
4. SEE STANDARD 506S-4A FOR HDPE RING INSTALLATION (FOR USE IN PAVED AREAS ONLY).

| CITY OF AUSTIN<br>AUSTIN WATER UTILITY | MINOR MANHOLE ADJUSTMENT & NEW MANHOLE CONSTRUCTION | |
|---|---|---|
| Kathi L Flowers 8/31/2011 | THE ARCHITECT/ENGINEER ASSUMES RESPONSIBILITY FOR APPROPRIATE USE OF THIS STANDARD. | STANDARD NO.<br>506S-4<br>1 OF 2 |

| NO | DATE | ISSUES AND REVISIONS |
|---|---|---|
| | | |

Kimley»Horn F-928
10814 JOLLYVILLE ROAD
BLDG. 4, STE 200
AUSTIN, TX 78759
PHONE: 512-418-1771

STANDARD DETAILS
DRAINAGE
SHEET 3 OF 4
ANDERSON MILL ROAD PHASE 2

CEDAR PARK



FILENAME: AMR*STD*DRG*03.dgn
PLOTTED: 8/5/2022 3:51:05 PM

## INSIDE PAVEMENT DETAIL

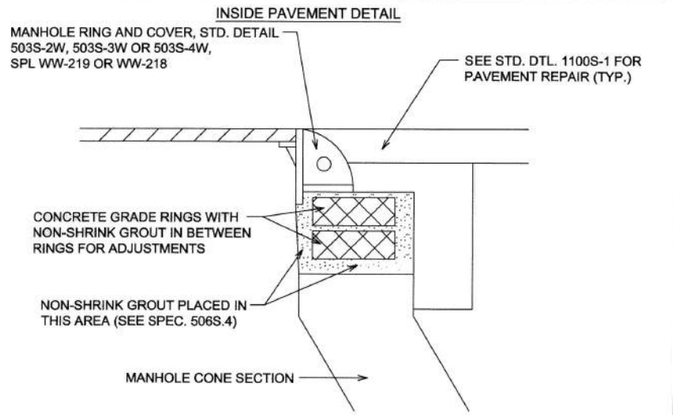


## OUTSIDE PAVEMENT DETAIL

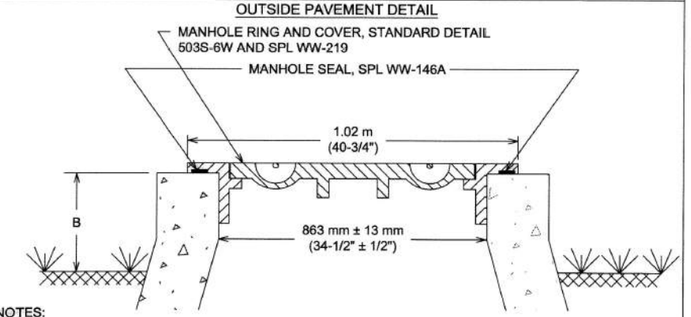


NOTES:
1. FOR USE IN UNPAVED AREAS ONLY
2. WHEN USED WITHIN 100-YEAR FLOODPLAIN, SEE DTL. 506S-6 FOR ADDITIONAL M.H. REQUIREMENTS.
3. DIMENSION B=150-300 mm (6"-12") FOR M.H. LOCATED IN 100-YR FLOOD PLAN. =50-300 mm (2"-12") FOR M.H. OUTSIDE 100-YR FLOOD PLAN.

| CITY OF AUSTIN<br>AUSTIN WATER UTILITY | MINOR MANHOLE ADJUSTMENT & NEW MANHOLE CONSTRUCTION | |
|---|---|---|
| Kathi L Flowers 8/31/2011 | THE ARCHITECT/ENGINEER ASSUMES RESPONSIBILITY FOR APPROPRIATE USE OF THIS STANDARD. | STANDARD NO.<br>506S-4<br>2 OF 2 |

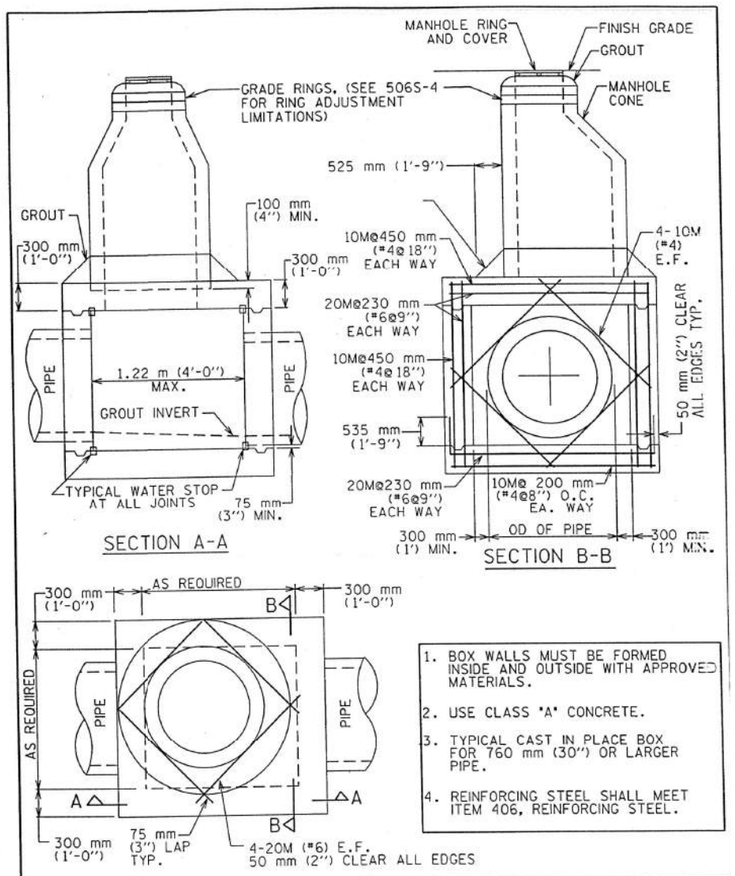


1. BOX WALLS MUST BE FORMED INSIDE AND OUTSIDE WITH APPROVED MATERIALS.
2. USE CLASS "A" CONCRETE.
3. TYPICAL CAST IN PLACE BOX FOR 760 mm (30") OR LARGER PIPE.
4. REINFORCING STEEL SHALL MEET ITEM 406, REINFORCING STEEL.

| CITY OF AUSTIN<br>WATER AND WASTEWATER UTILITY | TYPICAL BOX MANHOLE<br>760 mm (30") & LARGER PIPE | |
|---|---|---|
| Kathi L Payne 2-17-00<br>ADOPTED | THE ARCHITECT/ENGINEER ASSUMES RESPONSIBILITY FOR APPROPRIATE USE OF THIS STANDARD. | STANDARD NO.<br>506S-5 |

| NO | DATE | ISSUES AND REVISIONS |
|---|---|---|


Kimley»Horn F-928
10814 JOLLYVILLE ROAD
BLDG. 4, STE 200
AUSTIN, TX 78759
PHONE: 512-418-1771


STANDARD DETAILS
DRAINAGE
SHEET 4 OF 4
ANDERSON MILL ROAD PHASE 2

CEDAR PARK



FILENAME: AMR*STD*DRG*04.dgn
PLOTTED: 8/5/2022 3:51:22 PM

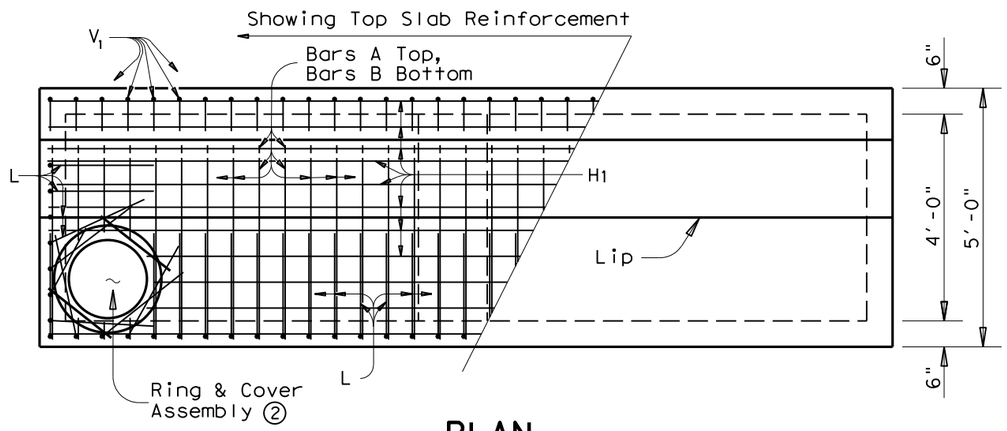


## PLAN

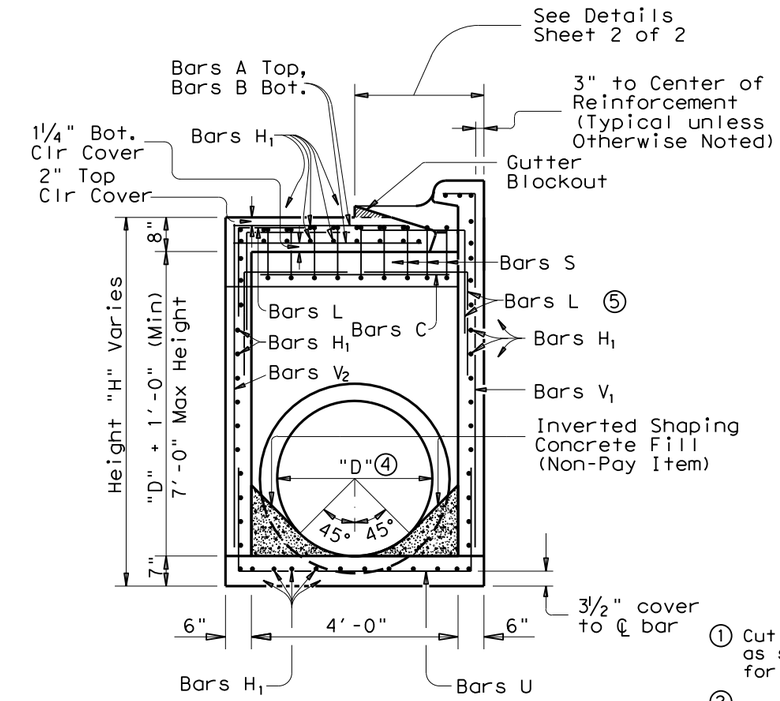


## SECTION A-A

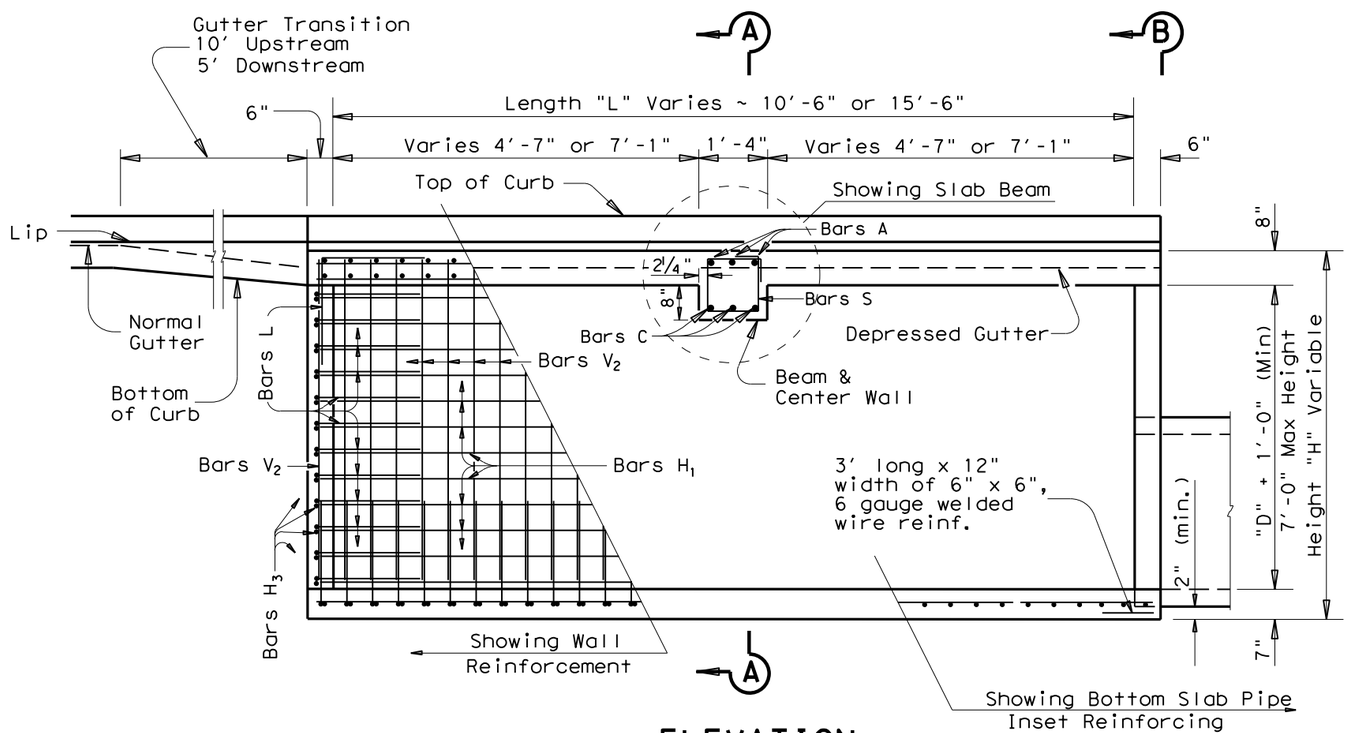


## ELEVATION

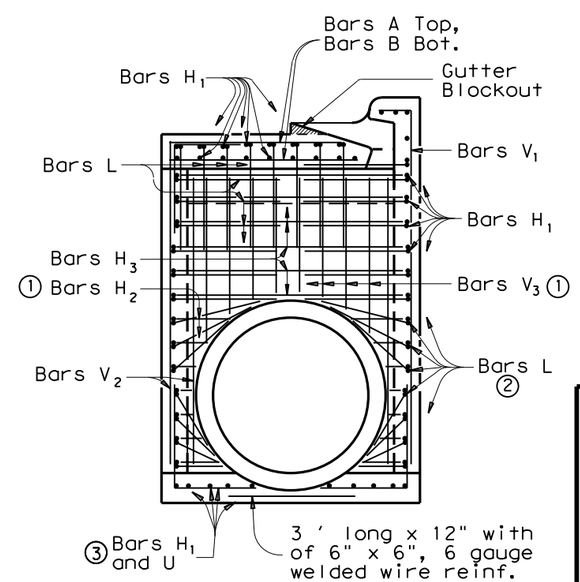


## END VIEW B-B

① Cut bars $H_2$ & $V_3$ as shown. Allow 3" for End Cover (Typical).

② Place bars L with Bars A, H, and V as shown at RCP, corners and Manhole Assembly. Place Manhole ring such that interior opening aligns with inside faces of two corner walls. Place 4 ~ #4 Bars as shown in Plan View around Ring Assembly to engage cut slab Bars A, B & $H_1$.

③ Cut bars $H_1$ and end bar U as Required to accommodate pipe inset in Bottom Slab.

④ "D" = Pipe Diameter

⑤ Align Bars L with Beam Reinforcement Bars C and Top Slab Reinforcement Bars A (12 Bars L Total) at ends of transverse slab beam.

HS20 LOADING

Sheet 1 of 2

Texas Department of Transportation
Austin District Design

# CURB INLET DETAILS

## TYPE IR & IIR

## (FOR 36" DIA. RCP & SMALLER)

Austin District Standard

© TxDOT 2002

| REVISIONS | DISTRICT | FEDERAL AID PROJECT | | | SHEET |
|---|---|---|---|---|---|
| 9/04 2004 Update | . | . | | | 102 |
| 10/08 Rev. Blockout Detail | COUNTY | | CONTROL | SECT | JOB | HIGHWAY |
| 04/09 Remove Reinf. Lug | . | | . | . | . | . |

| BAR TABLE | | |
|---|---|---|
| BAR | SIZE | MAX. SPA. |
| A | #5 | 5" |
| B | #5 | 5" |
| C | #8 | As Shown |
| $H_1$ | #5 | 6" |
| $H_2$ | #5 | 6" |
| $H_3$ | #5 | 6" |
| L | #5 | 6" |
| S | #4 | 5" |
| U | #5 | 6" |
| $V_1$ | #5 | 6" |
| $V_2$ | #5 | 6" |
| $V_3$ | #5 | 6" |
| W | #5 | 6" |

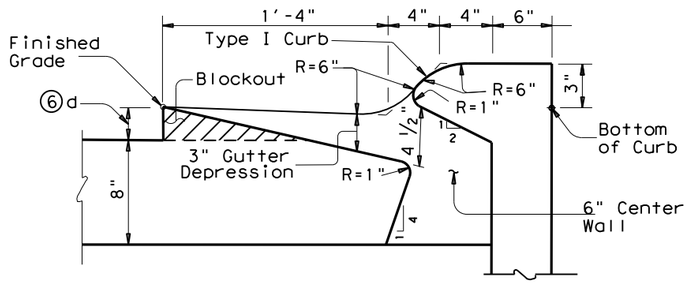


## THROAT DETAILS TYPE IR INLETS

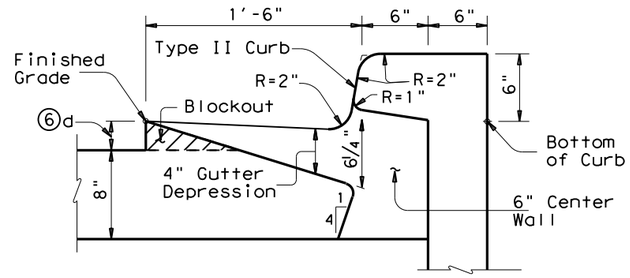


## THROAT DETAILS TYPE IIR INLETS

⑥ "d" = Depth of Overlay.

## GENERAL NOTES:

Use Class "C" concrete for inlet box bottom and walls; use Class "S" concrete for inlet box top.

Ring and cover must meet requirements of AASHTO M306, "Standard Specification for Drainage Structure Castings". Materials shall conform to ASTM A48, Class 35B for gray iron castings or ASTM A536, Grade 65-45-12 for ductile iron castings. Aluminum alloy castings will not be permitted. Consider ring and cover subsidiary to the pertinent Item.

If two inlets are to be installed end to end, install equivalent opening or pipe segment in end walls between boxes. Each end wall between inlet boxes will be reinforced as shown for single box.

Build inlets in stages so that base laying operations may be continuous over the top of the inlet. Backfill any additional excavation required below finished base grade within roadway limits with Class "B" Conc (Riprap).

Consider work or materials involved for inlet stage construction subsidiary to the pertinent Items.

Ensure connecting pipes enter within 10 degrees of normal to inlet wall. If necessary, use pipe elbow or curved approach alignment to stay within this limit.

Provide gutter blockout(s) for the length of each inlet for temporary drainage. Fill blockout(s) after final roadway paving. Consider this work subsidiary to pertinent Item.

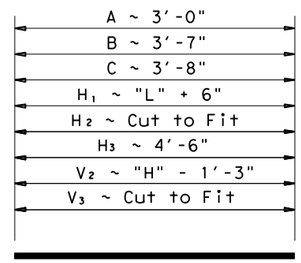


**BARS A, B, C, $H_1$, $H_2$, $H_3$, $V_2$, & $V_3$**

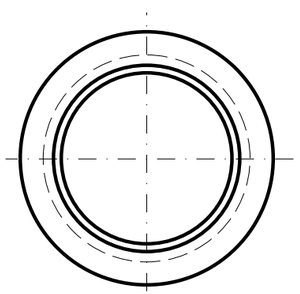

TOP VIEW

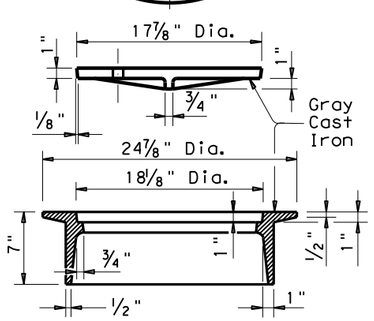


Approximate Weight 240 lbs.

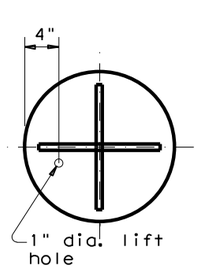


BOTTOM VIEW

## RING AND COVER DETAILS

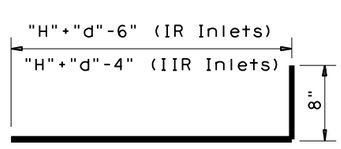


**BARS $V_1$**

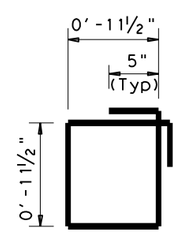


**BARS S**

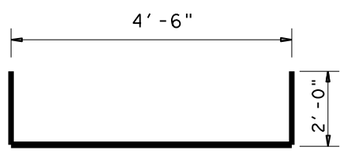


**BARS U**

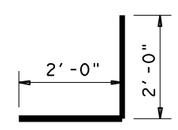


**BARS L**

HS20 LOADING

Sheet 2 of 2

Texas Department of Transportation
Austin District Design

# CURB INLET DETAILS TYPE IR & IIR (FOR 36" DIA. RCP & SMALLER)

**Austin District Standard**

© TxDOT Aug. 2002

REVISIONS
9/04 2004 Update
10/08 Rev. Lip Dimension
04/09 Remove Reinf. Lug

| DISTRICT | FEDERAL AID PROJECT | | | SHEET |
|---|---|---|---|---|
| . | . | | | 103 |
| COUNTY | CONTROL | SECT | JOB | HIGHWAY |
| . | . | . | . | . |

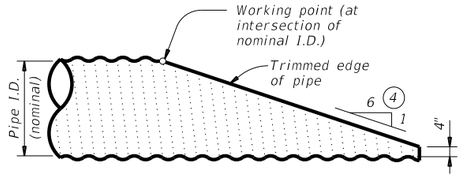


NOTE: All cross pipes, calculations, and dimensions are based on the pipe culverts mitered as shown in this detail. Alternate styles of mitered ends will require that appropriate adjustments be made to the values presented on this standard.

## SIDE ELEVATION OF TYPICAL PIPE CULVERT MITER

(Showing corrugated metal pipe (CMP) culvert Details at reinforced concrete pipe (RCP) culvert are similar.)

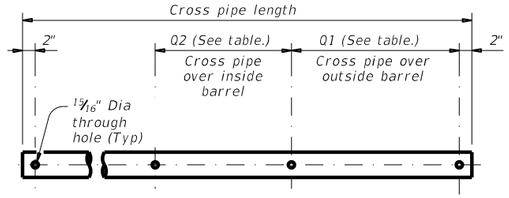


## PIPE WITH BOLTED ANCHOR

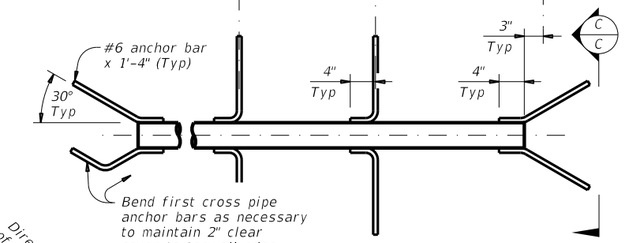


## PIPE WITH ANCHOR BARS

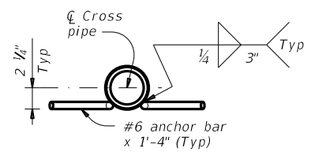


## SECTION C-C

## CROSS PIPE DETAILS

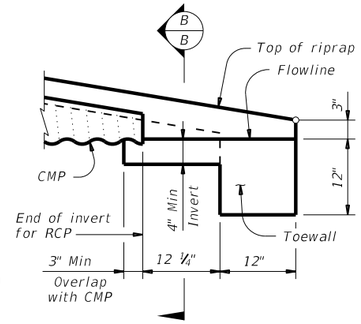


## DETAIL "A"

(Showing invert with corrugated metal pipe (CMP) culvert. Reinforced concrete pipe (RCP) culvert details are similar. Cross pipes not shown for clarity.)

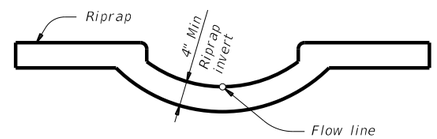


## SECTION B-B

(Cross pipes not shown for clarity.)

## CROSS PIPE LENGTHS, REQUIRED PIPE SIZES, AND RIPRAP QUANTITIES (2)

| Nominal Culvert I.D. | Conc Riprap (CY) (6) | Pipe Culvert Spa ~ G | Single Barrel ~ Q1 | Multi-Barrel ~ Q1 | Q2 | Conditions for Use of Cross Pipes | Cross Pipe Sizes |
|---|---|---|---|---|---|---|---|
| 12" | 0.6 | 0' - 9" | N/A | 2' - 1" | 1' - 9" | 3 or more pipe culverts | 3" Std (3.500" O.D.) |
| 15" | 0.7 | 0' - 11" | N/A | 2' - 5" | 2' - 2" | | |
| 18" | 0.8 | 1' - 2" | N/A | 2' - 10" | 2' - 8" | | |
| 21" | 0.9 | 1' - 4" | N/A | 3' - 2" | 3' - 1" | | |
| 24" | 0.9 | 1' - 7" | N/A | 3' - 6" | 3' - 7" | | |
| 27" | 1.0 | 1' - 8" | N/A | 3' - 10" | 3' - 11" | 3 or more pipe culverts | 3 1/2" Std (4.000" O.D.) |
| 30" | 1.1 | 1' - 10" | N/A | 4' - 2" | 4' - 4" | 2 or more pipe culverts | |
| 33" | 1.2 | 1' - 11" | 4' - 2" | 4' - 5" | 4' - 8" | All pipe culverts | |
| 36" | 1.3 | 2' - 1" | 4' - 5" | 4' - 9" | 5' - 1" | All pipe culverts | 4" Std (4.500" O.D.) |
| 42" | 1.5 | 2' - 4" | 4' - 11" | 5' - 5" | 5' - 10" | | |
| 48" | 1.7 | 2' - 7" | 5' - 5" | 6' - 0" | 6' - 7" | All pipe culverts | 5" Std (5.563" O.D.) |
| 54" | 2.0 | 3' - 0" | 5' - 11" | 6' - 9" | 7' - 6" | | |
| 60" | 2.2 | 3' - 3" | 6' - 5" | 7' - 4" | 8' - 3" | | |
| 66" | 2.4 | 3' - 3" | 6' - 11" | 7' - 10" | 8' - 9" | | |
| 72" | 2.7 | 3' - 4" | 7' - 5" | 8' - 5" | 9' - 4" | | |

(1) The proper installation of the first cross pipe is critical for vehicle safety. Place the top of the first cross pipe no more than 6" above the flow line.

(2) Provide cross pipes, except the first bottom pipe, of the size shown in the table. Provide a 3 1#2" standard pipe (4" O.D.) for the first bottom pipe.

(3) Install the third cross pipe from the bottom of the culvert using a bolted connection. Ensure that riprap concrete does not flow into the cross pipe so as to permit disassembly of the bolted connection to allow cleanout access. At the Contractor's option, install all other cross pipes using the bolted connection details.

(4) Match cross slope as shown elsewhere in the plans. Cross slope of 6:1 or flatter is required for vehicle safety.

(5) Riprap placed beyond the limits shown will be paid for as concrete riprap in accordance with Item 432, "Riprap".

(6) Quantities shown are for one end of one reinforced concrete pipe (RCP) culvert. For multiple pipe culverts or for corrugated metal pipe (CMP) culverts, quantities will need to be adjusted. Riprap quantities are for contractor's information only.

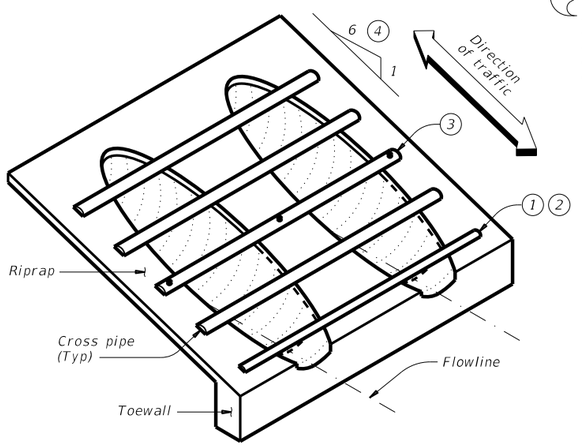


## ISOMETRIC VIEW OF TYPICAL INSTALLATION

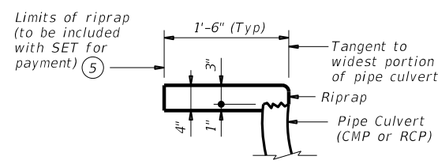


## SHOWING TYPICAL PIPE CULVERT AND RIPRAP

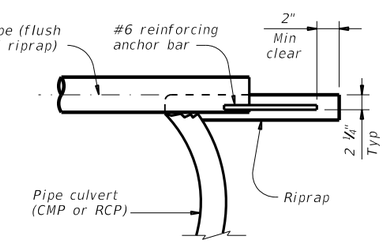


## SHOWING CROSS PIPE WITH ANCHOR BAR

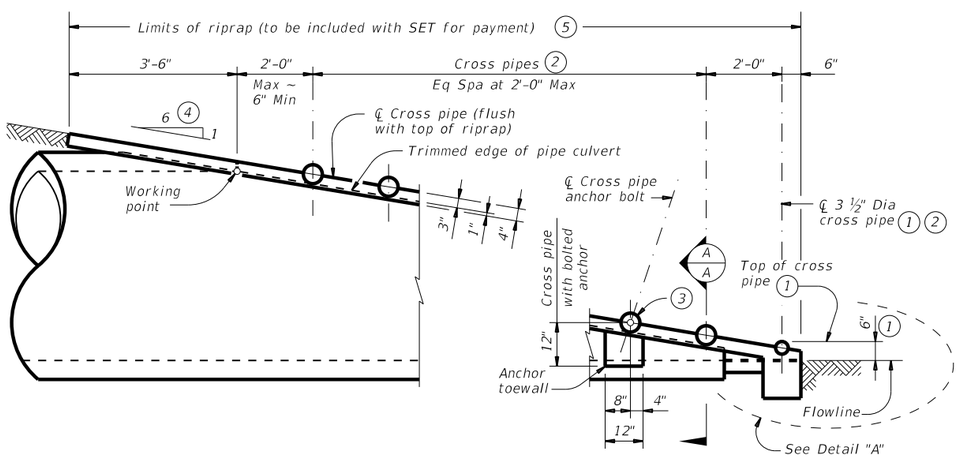


## SIDE ELEVATION OF CAST-IN-PLACE CONCRETE

(Showing reinforced concrete pipe (RCP) culvert. Details at corrugated metal pipe (CMP) culvert are similar.)

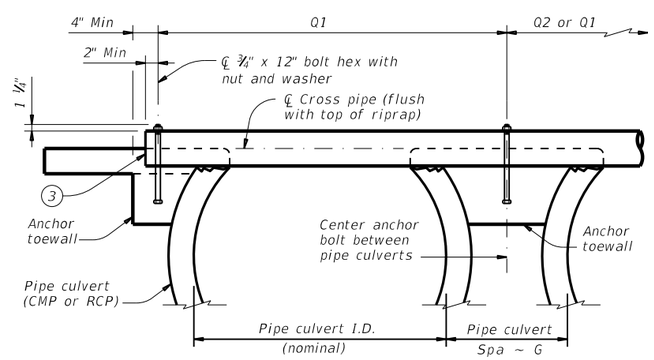


## SHOWING CROSS PIPE WITH BOLTED ANCHOR

## SECTION A-A

### MATERIAL NOTES:

Synthetic fibers listed on the "Fibers for Concrete" Material Producer List (MPL) may be used in lieu of steel reinforcing in riprap concrete unless noted otherwise.

Provide cross pipes that meet the requirements of ASTM A53 (Type E or S, Gr B), ASTM A500 (Gr B), or API 5LX52.

Provide ASTM A307 bolts and nuts.

Galvanize all steel components, except concrete reinforcing, after fabrication. Repair galvanizing damaged during transport or construction in accordance with the specifications.

### GENERAL NOTES:

Cross pipes are designed for a traversing load of 10,000 pounds at yield as recommended by Research Report 280-2F, "Safety Treatment of Roadside Parallel-Drainage Structures", Texas Transportation Institute, March 1981.

Safety end treatments (SET) shown herein are intended for use in those installations where out of control vehicles are likely to traverse the openings approximately perpendicular to the cross pipes.

Construct concrete riprap and all necessary inverts in accordance with the requirements of Item 432, "Riprap".

Payment for riprap and toewall is included in the Price Bid for each Safety End Treatment.

Texas Department of Transportation — Bridge Division Standard

# SAFETY END TREATMENT

FOR 12" DIA TO 72" DIA
PIPE CULVERTS
TYPE II ~ PARALLEL DRAINAGE

## SETP-PD

| FILE: setppdse-20.dgn | DN: GAF | CK: CAT | DW: JRP | CK: GAF |
|---|---|---|---|---|
| ©TxDOT February 2020 | CONT | SECT | JOB | HIGHWAY |
| REVISIONS | DIST | | COUNTY | SHEET NO. 104 |

DISCLAIMER:
The use of this standard is governed by the "Texas Engineering Practice Act". No warranty of any kind is made by TxDOT for any purpose whatsoever. TxDOT assumes no responsibility for the conversion of this standard to other formats or for incorrect results or damages resulting from its use.

DATE:
FILE:

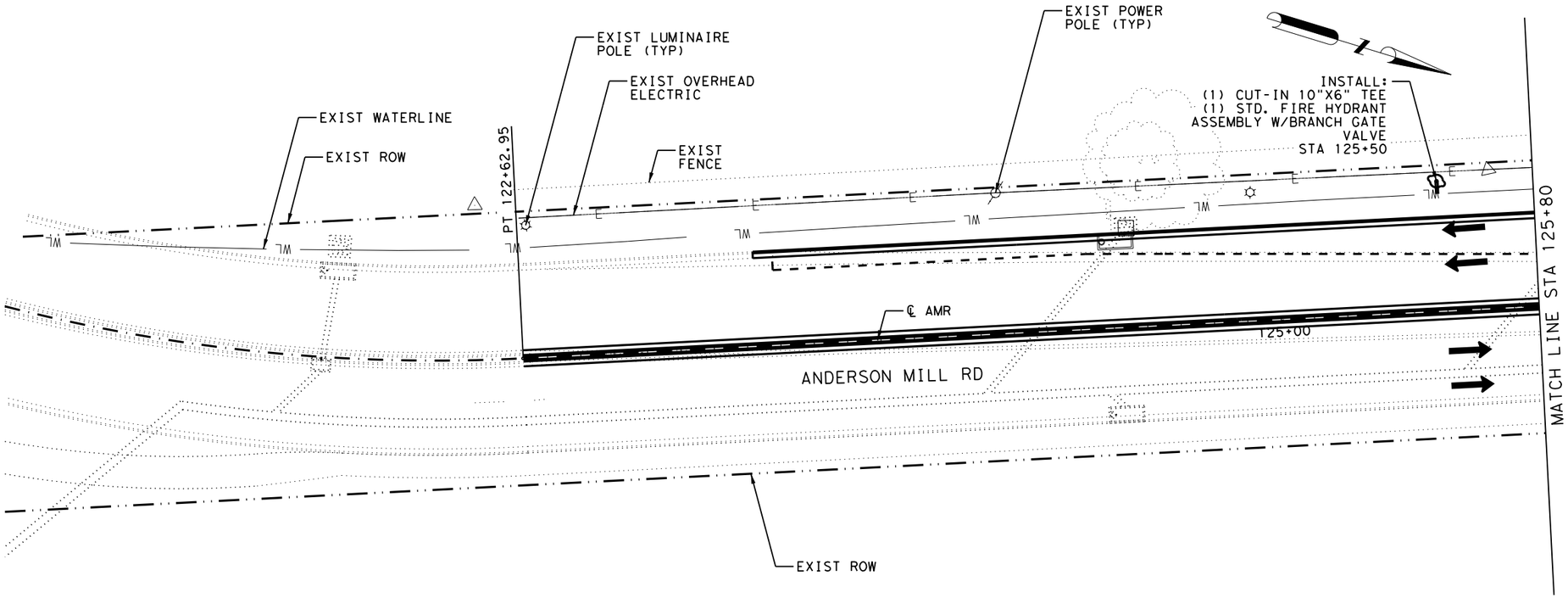


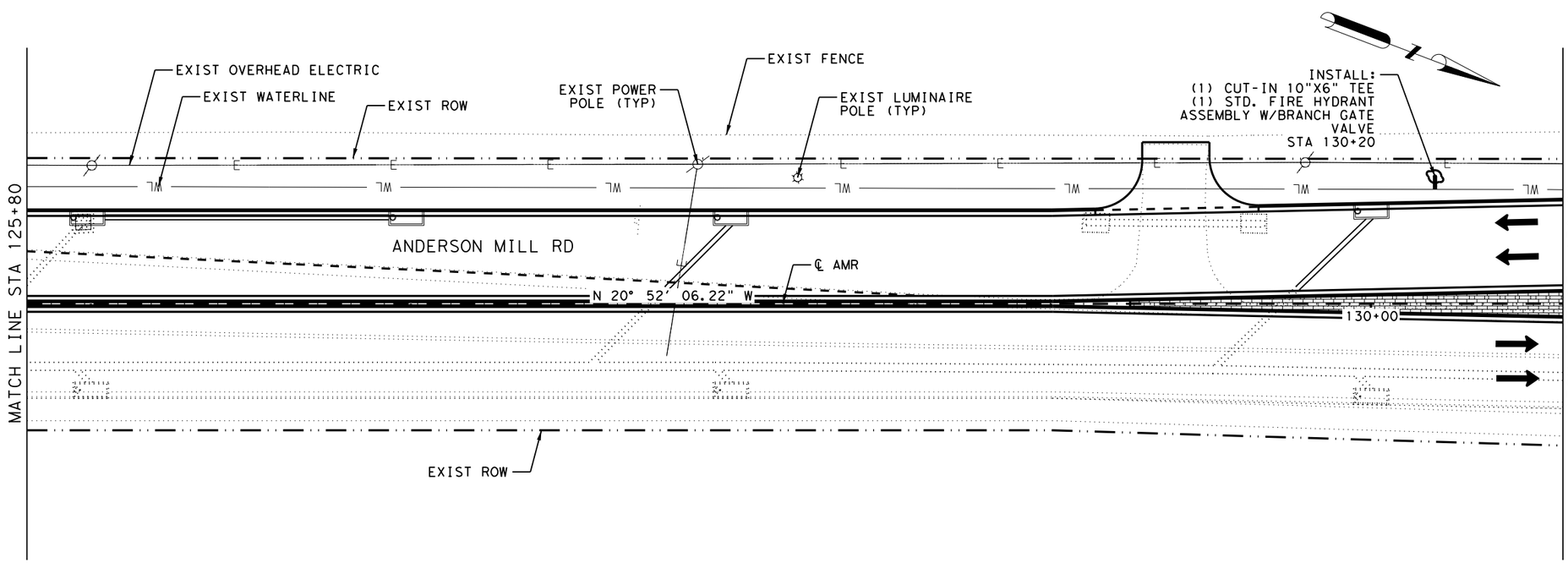


LEGEND

FIRE HYDRANT

0 20 40

| NO | DATE | ISSUES AND REVISIONS |
|---|---|---|

STATE OF TEXAS
DANIEL P. FURDOCK
135878
LICENSED
PROFESSIONAL ENGINEER

8/5/2022

Kimley»Horn F-928
10814 JOLLYVILLE ROAD
BLDG. 4, STE 300
AUSTIN, TX 78759
PHONE: 512-418-1771

# FIRE HYDRANT LAYOUT

SHEET 1 OF 5
ANDERSON MILL ROAD PHASE 2

CEDAR PARK



FILENAME: AMR-FH-01.dgn
PLOTTED: 8/5/2022 3:53:18 PM

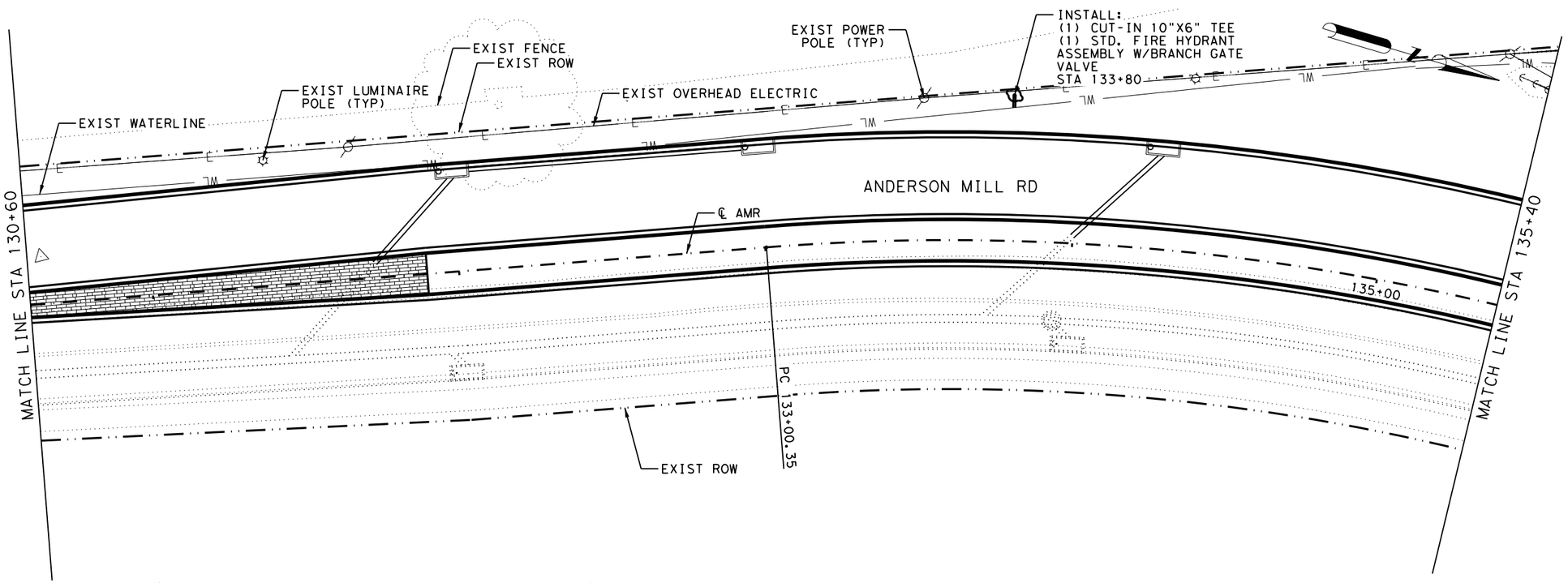


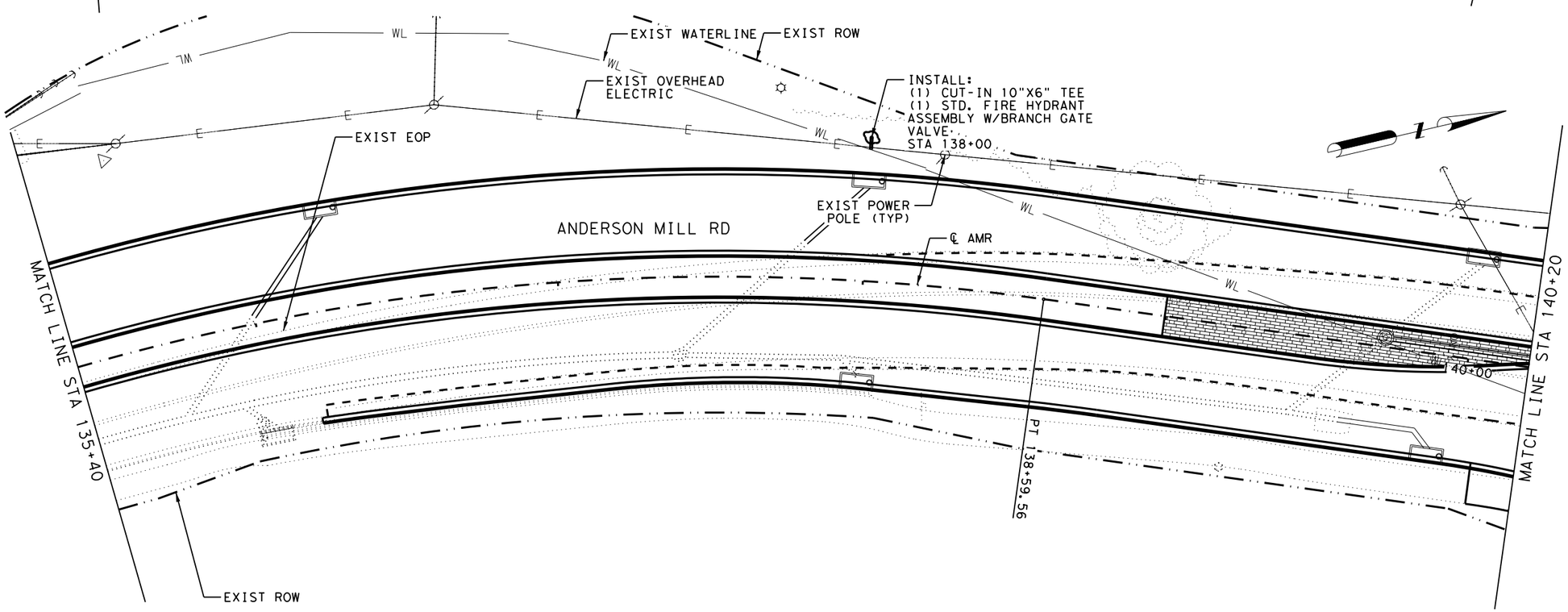


LEGEND

FIRE HYDRANT

0 20 40

| NO | DATE | ISSUES AND REVISIONS |
|---|---|---|
| | | |

STATE OF TEXAS
DANIEL P. FURDOCK
135878
LICENSED
PROFESSIONAL ENGINEER
8/5/2022

Kimley»Horn F-928
10814 JOLLYVILLE ROAD
BLDG. 4, STE 300
AUSTIN, TX 78759
PHONE: 512-418-1771

# FIRE HYDRANT LAYOUT

SHEET 2 OF 5
ANDERSON MILL ROAD PHASE 2

CEDAR PARK



FILENAME: AMR+FH+02.dgn
PLOTTED: 8/5/2022 3:53:29 PM

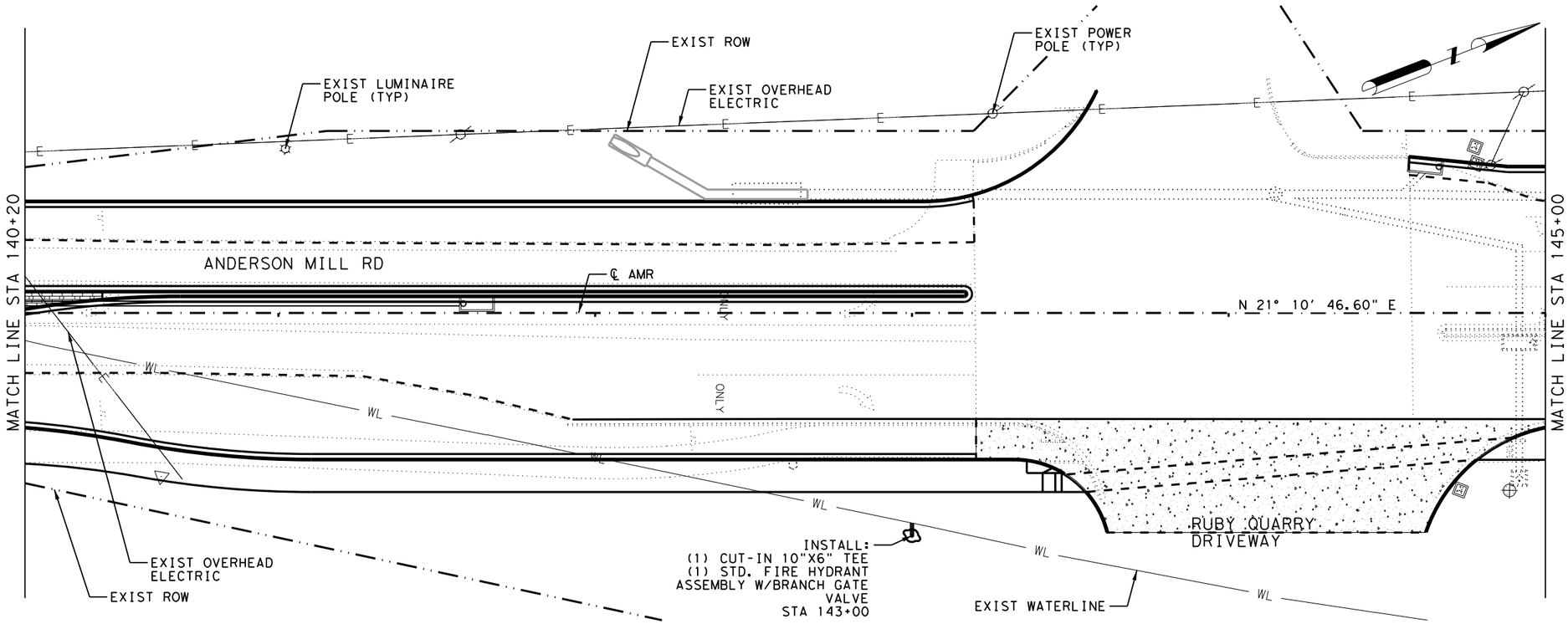


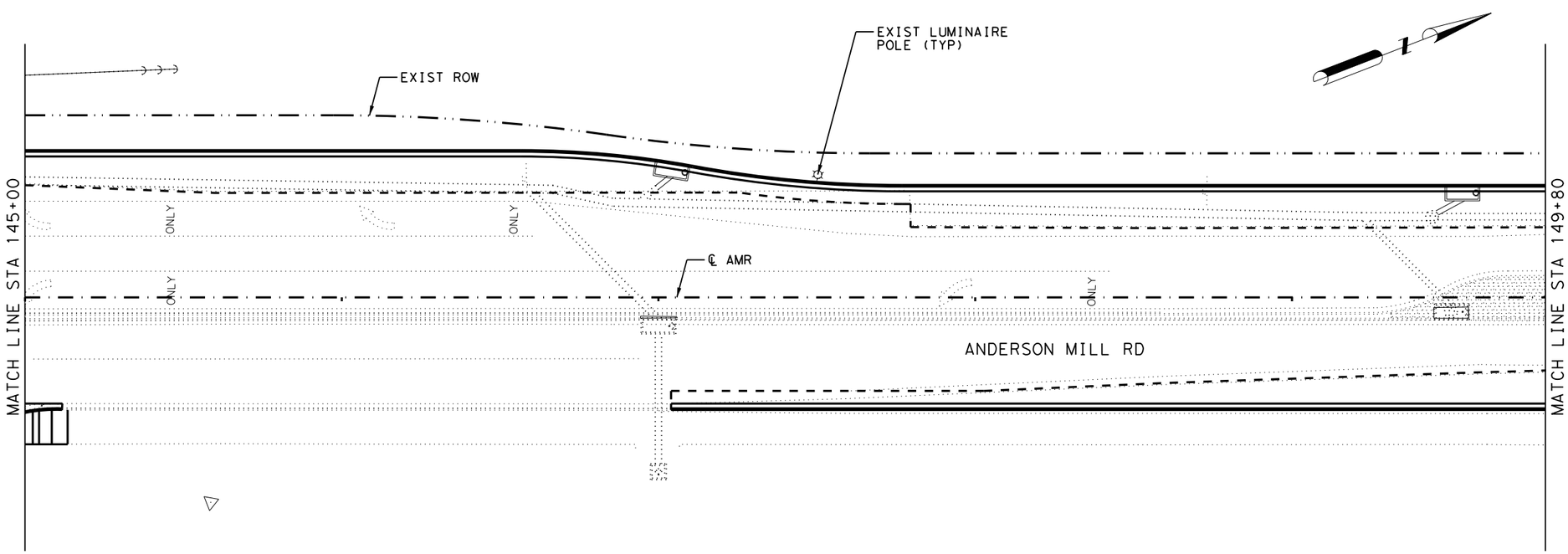


LEGEND

FIRE HYDRANT

0 20 40

| NO | DATE | ISSUES AND REVISIONS |
|---|---|---|
| | | |

STATE OF TEXAS
DANIEL P. FURDOCK
135878
LICENSED
PROFESSIONAL ENGINEER

8/5/2022

Kimley»Horn F-928
10814 JOLLYVILLE ROAD
BLDG. 4, STE 300
AUSTIN, TX 78759
PHONE: 512-418-1771

# FIRE HYDRANT LAYOUT

SHEET 3 OF 5
ANDERSON MILL ROAD PHASE 2

CEDAR PARK



FILENAME: AMR-FH-03.dgn
PLOTTED: 8/5/2022 3:53:35 PM

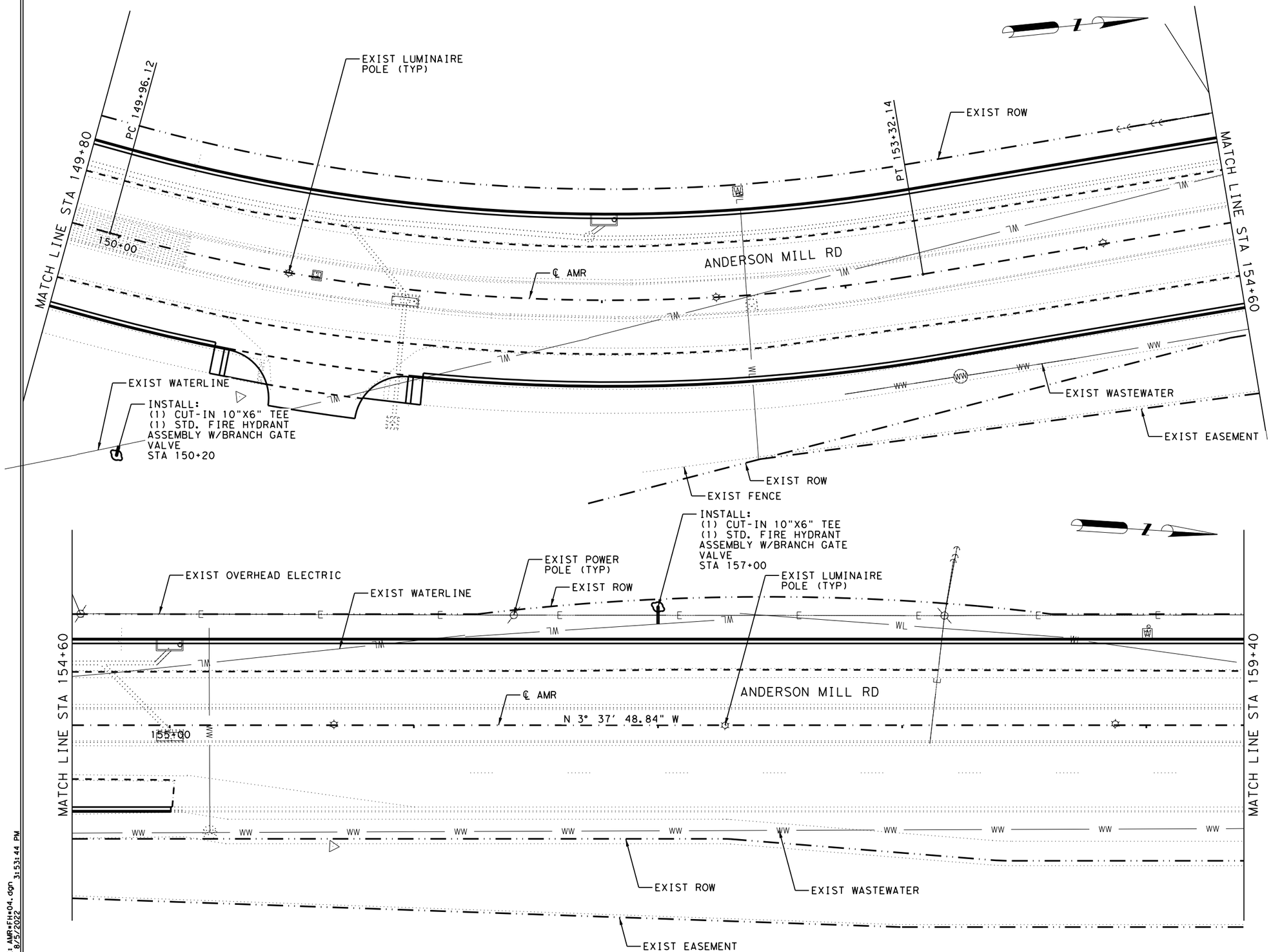


LEGEND

FIRE HYDRANT

0 20 40

| NO | DATE | ISSUES AND REVISIONS |
|---|---|---|

STATE OF TEXAS
DANIEL P. FURDOCK
135878
LICENSED
PROFESSIONAL ENGINEER
8/5/2022

Kimley»Horn
F-928
10814 JOLLYVILLE ROAD
BLDG. 4, STE 300
AUSTIN, TX 78759
PHONE: 512-418-1771

# FIRE HYDRANT LAYOUT

SHEET 4 OF 5
ANDERSON MILL ROAD PHASE 2

CEDAR PARK



FILENAME: AMR-FH-04.dgn
PLOTTED: 8/5/2022 3:53:44 PM

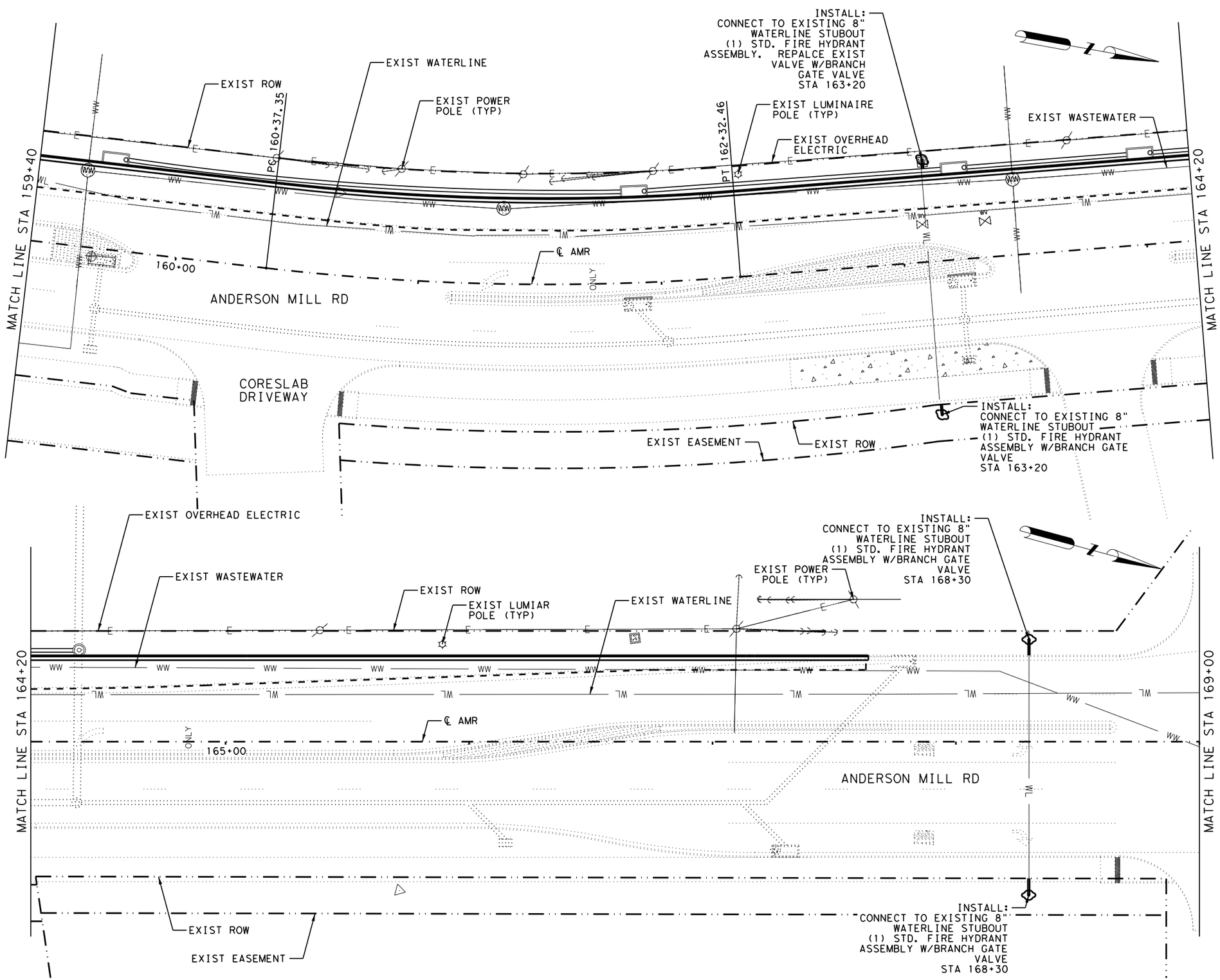


LEGEND

FIRE HYDRANT

0 20 40

| NO | DATE | ISSUES AND REVISIONS |
|---|---|---|

PRELIMINARY

STATE OF TEXAS
DANIEL P. FURDOCK
135878
LICENSED
PROFESSIONAL ENGINEER

8/5/2022

Kimley»Horn
F-928
10814 JOLLYVILLE ROAD
BLDG. 4, STE 300
AUSTIN, TX 78759
PHONE: 512-418-1771

# FIRE HYDRANT LAYOUT

SHEET 5 OF 5
ANDERSON MILL ROAD PHASE 2

CEDAR PARK



FILENAME: AMR-FH-05.dgn
PLOTTED: 8/5/2022 3:53:50 PM

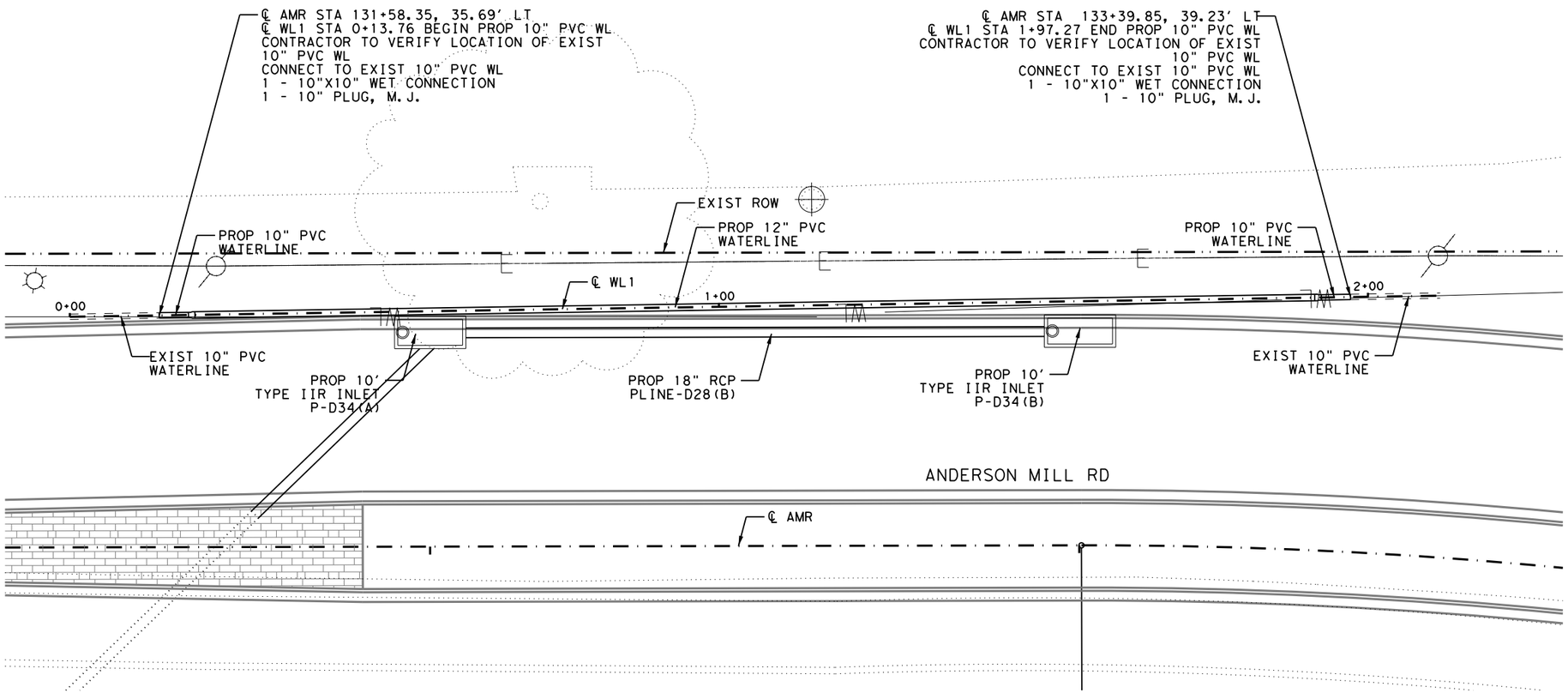


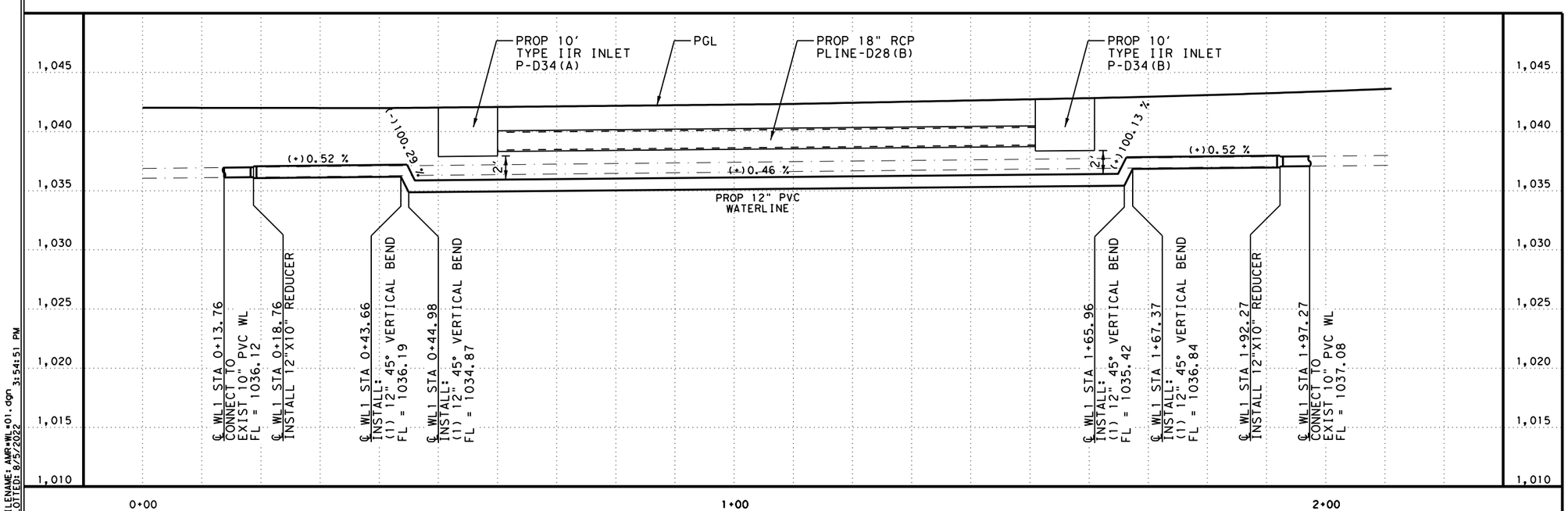


0 10 20

NOTES:

1. ALL UTILITIES TO BE LOCATED AND CONFIRMED BY THE CONTRACTOR IN THE FIELD PRIOR TO CONSTRUCTION.
2. CONTRACTOR TO MAINTAIN 48" MINIMUM COVER OVER PROPOSED WATERLINE. CONTRACTOR TO MAINTAIN 2' VERTICAL CLEARANCE BETWEEN PROPOSED AND EXISTING UTILITIES AND STORM DRAIN UNLESS OTHERWISE SHOWN ON THE PLANS.
3. CONTRACTOR TO RESTRAIN ALL PIPE, JOINTS, AND FITTINGS.

| NO | DATE | ISSUES AND REVISIONS |
|---|---|---|

STATE OF TEXAS
AUSTIN S. HELTON
124922
LICENSED
PROFESSIONAL ENGINEER
8/5/2022


Kimley»Horn
F-928
10814 JOLLYVILLE ROAD
BLDG. 4, STE 200
AUSTIN, TX 78759
PHONE: 512-418-1771


# WATERLINE PLAN & PROFILE

SHEET 1 OF 5
ANDERSON MILL ROAD PHASE 2

CEDAR PARK



FILENAME: AMR*WL*01.dgn
PLOTTED: 8/5/2022 3:54:51 PM

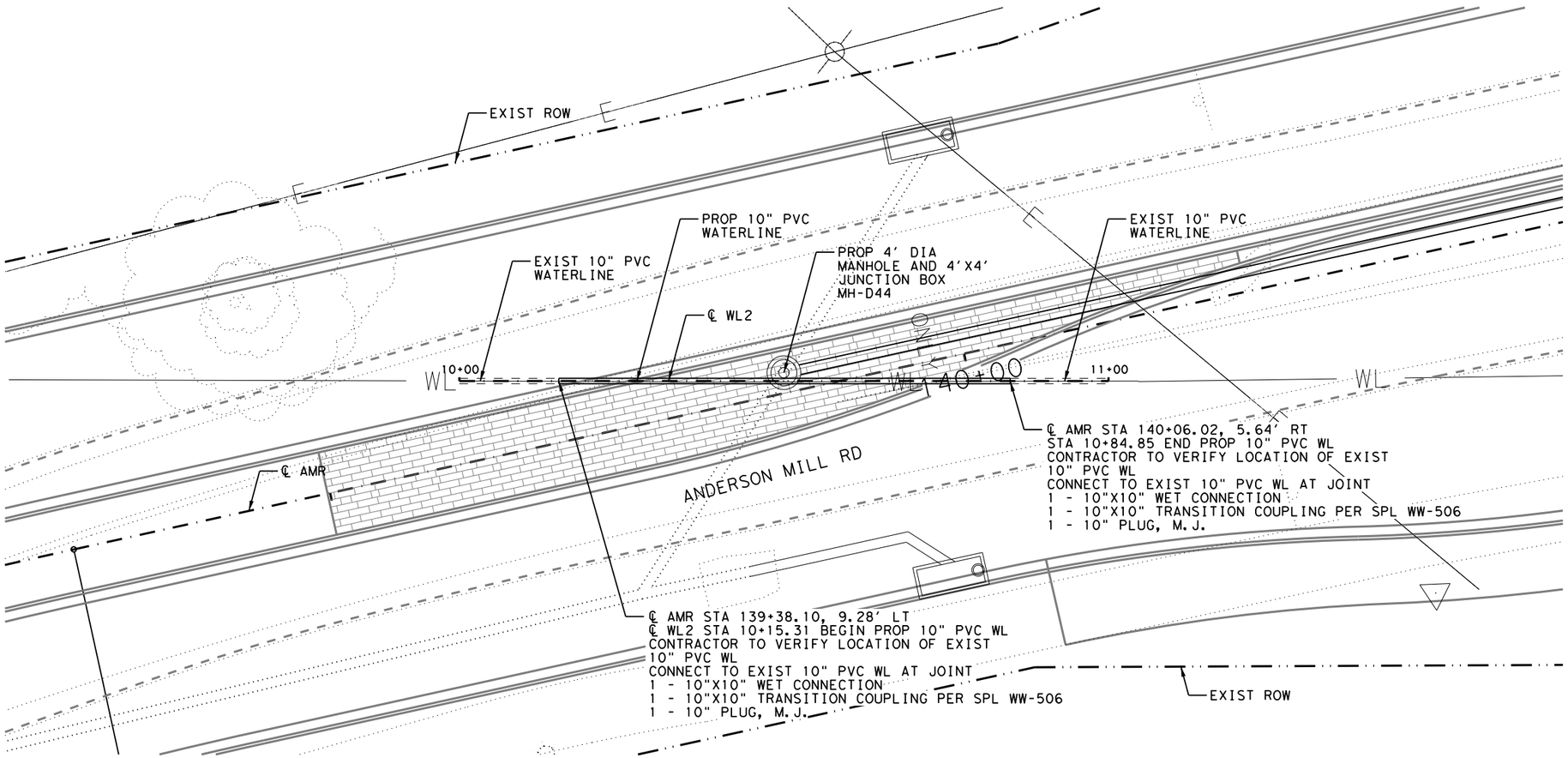


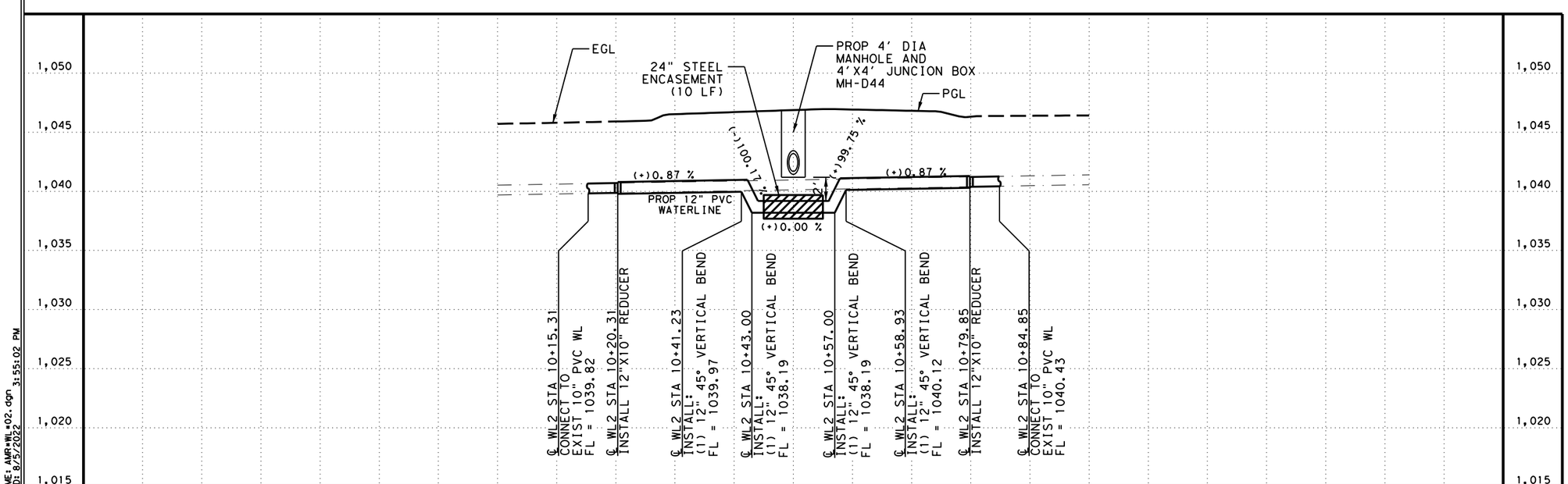


0 10 20

NOTES:

1. ALL UTILITIES TO BE LOCATED AND CONFIRMED BY THE CONTRACTOR IN THE FIELD PRIOR TO CONSTRUCTION.
2. CONTRACTOR TO MAINTAIN 48" MINIMUM COVER OVER PROPOSED WATERLINE. CONTRACTOR TO MAINTAIN 2' VERTICAL CLEARANCE BETWEEN PROPOSED AND EXISTING UTILITIES AND STORM DRAIN UNLESS OTHERWISE SHOWN ON THE PLANS.
3. CONTRACTOR TO RESTRAIN ALL PIPE, JOINTS, AND FITTINGS.

| NO | DATE | ISSUES AND REVISIONS |
|---|---|---|
| | | |

STATE OF TEXAS
AUSTIN S. HELTON
124922
LICENSED
PROFESSIONAL ENGINEER
8/5/2022

Kimley»Horn F-928
10814 JOLLYVILLE ROAD
BLDG. 4, STE 200
AUSTIN, TX 78759
PHONE: 512-418-1771

# WATERLINE PLAN & PROFILE

SHEET 2 OF 5
ANDERSON MILL ROAD PHASE 2

CEDAR PARK



FILENAME: AMR*WL*02.dgn
PLOTTED: 8/5/2022 3:55:02 PM

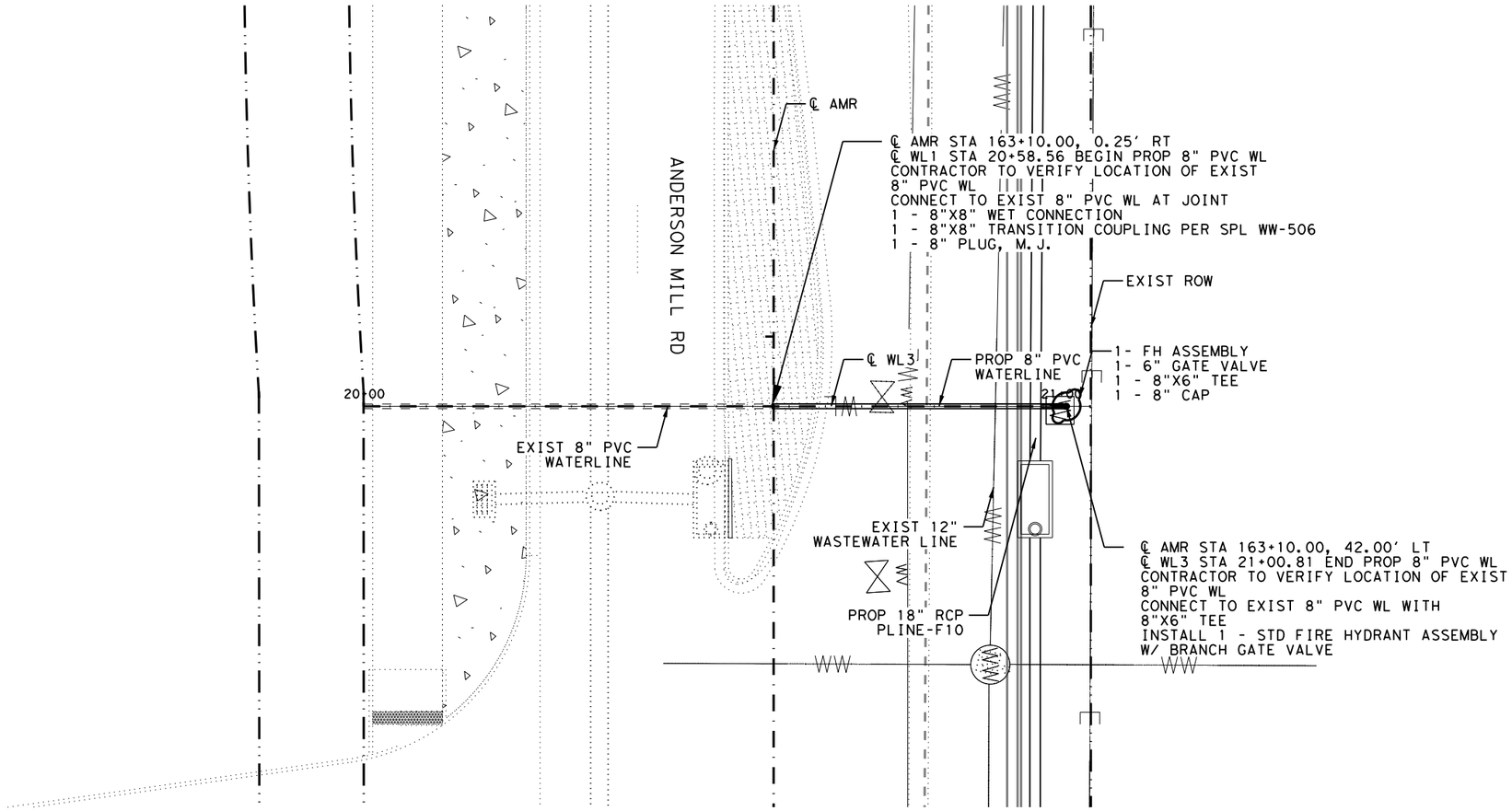


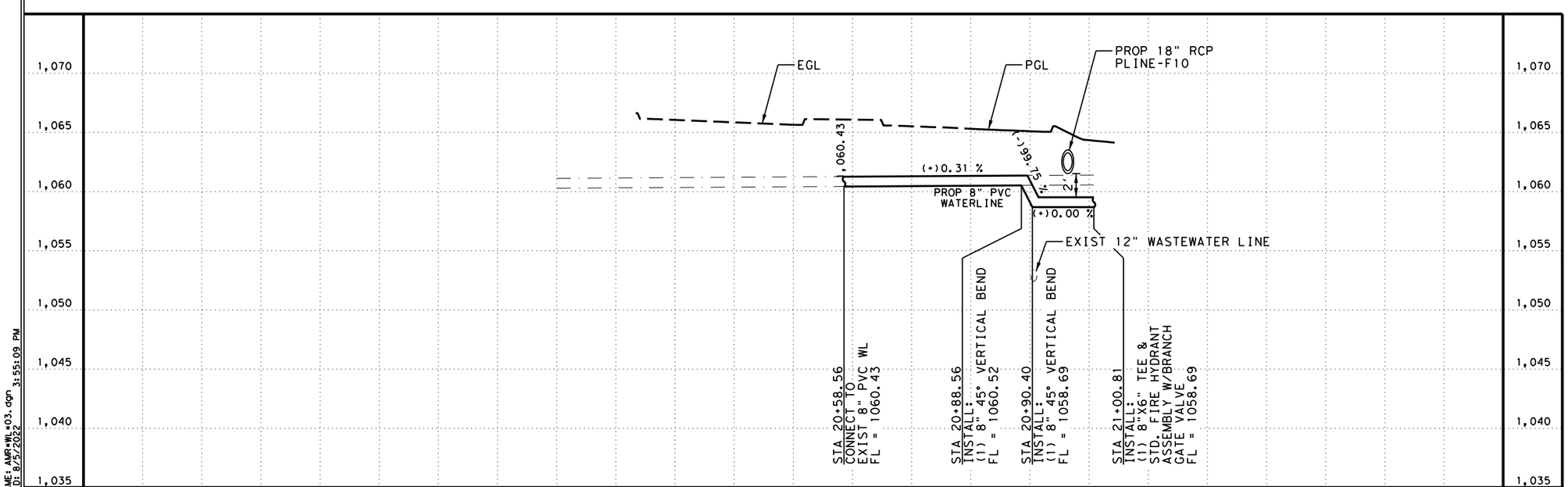


0 10 20

NOTES:

1. ALL UTILITIES TO BE LOCATED AND CONFIRMED BY THE CONTRACTOR IN THE FIELD PRIOR TO CONSTRUCTION.
2. CONTRACTOR TO MAINTAIN 48" MINIMUM COVER OVER PROPOSED WATERLINE. CONTRACTOR TO MAINTAIN 2' VERTICAL CLEARANCE BETWEEN PROPOSED AND EXISTING UTILITIES AND STORM DRAIN UNLESS OTHERWISE SHOWN ON THE PLANS.
3. CONTRACTOR TO RESTRAIN ALL PIPE, JOINTS, AND FITTINGS.

| NO | DATE | ISSUES AND REVISIONS |
|---|---|---|

STATE OF TEXAS
AUSTIN S. HELTON
124922
LICENSED
PROFESSIONAL ENGINEER
8/5/2022

Kimley»Horn F-928
10814 JOLLYVILLE ROAD
BLDG. 4, STE 200
AUSTIN, TX 78759
PHONE: 512-418-1771

# WATERLINE PLAN & PROFILE

SHEET 3 OF 5
ANDERSON MILL ROAD PHASE 2

CEDAR PARK



FILENAME: AMR*WL*03.dgn
PLOTTED: 8/5/2022 3:55:09 PM

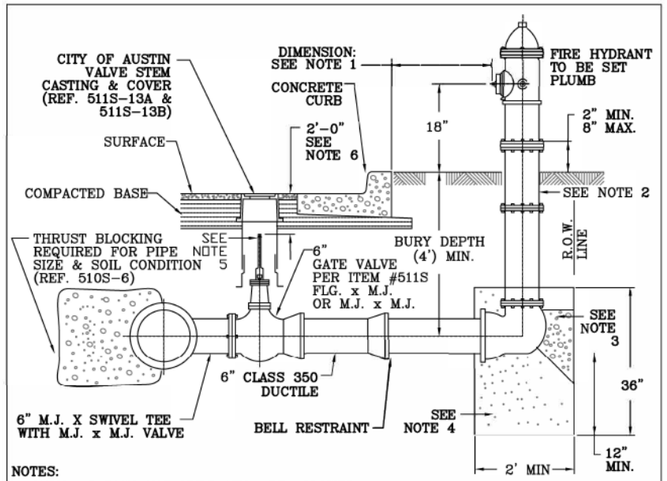


NOTES:

1. ONLY 4.5 INCH NST HYDRANTS ARE ALLOWED.
2. HYDRANTS MUST BE PLACED TO FACE THE FIRE LANE.
3. IN RIGHT OF WAY AREAS, PLACE HYDRANTS AT ROW LINE. HYDRANTS ARE NOT TO BE PLACED IN SIDEWALK AREAS. HYDRANTS SHOULD NOT BE PLACED CLOSER THAN 3 FEET OR FURTHER THAN 6 FEET FROM THE BACK OF CURB. WHERE POSSIBLE, PLACE VALVE IN PAVEMENT. IF NOT POSSIBLE, PLACE A VALVE BOX PAD (DETAIL FROM CEDAR PARK WEBSITE) AROUND VALVE. NO VALVES ARE TO BE PLACED IN CONFLICT WITH PROPOSED/ EXISTING CURBS OR GUTTERS.
4. FOR BURY DEPTHS GREATER THAN 5', ONE BARREL EXTENSION NOT EXCEEDING 2 FOOT IN LENGTH SHALL BE INSTALLED DIRECTLY BELOW THE FIRE HYDRANT.
5. ALL PIPE AND FITTINGS SHALL HAVE JOINT RESTRAINT FROM MAIN TO FIRE HYDRANT, ALL INCLUSIVE. THRUST BLOCKING SHALL BE CLASS A CONCRETE WITH A MINIMUM 1.5 SQUARE FOOT SURFACE AREA AGAINST PIPE. DO NOT BLOCK DRAIN HOLES.
6. CRUSHED STONE OR GRAVEL SHALL BE PLACED AROUND THE BOTTOM OF THE HYDRANT FOR A RADIUS OF AT LEAST 12" AND EXTEND AT LEAST 12" ABOVE THE OUTLET. DO NOT BLOCK DRAIN HOLES.
7. WELD SOCKET 2-½" X 2" DEEP TO 1" SCH. 40 ROUND STEM EXTENSION, FITTED ON OPERATING NUT, SCH. 80 FOR LENGTHS OVER 10'.
8. VALVE EXTENSIONS ARE REQUIRED ON ALL VALVES THAT EXCEED 3' DEEP FROM FINISHED GRADE. VALVE EXTENSIONS SHALL BE PLACED SUCH THAT THE EXTENSION NUT IS BETWEEN 18" AND 24" FROM FINISHED GRADE.
9. VALVE SPECIFICATION PER CITY OF AUSTIN STANDARD SPECIFICATION ITEM NO. 511.

| | | |
|---|---|---|
| CITY OF CEDAR PARK | STANDARD FIRE HYDRANT INSTALLATION | |
| ISSUED: JULY 8, 2014<br>REVISED: MARCH 11, 2022 | THE ENGINEER ASSUMES RESPONSIBILITY FOR APPROPRIATE USE OF THIS STANDARD. | |

| NO | DATE | ISSUES AND REVISIONS |
|---|---|---|
| | | |

Kimley»Horn
F-928
10814 JOLLYVILLE ROAD
BLDG. 4, STE 200
AUSTIN, TX 78759
PHONE: 512-418-1771

STANDARD DETAILS
WATER
SHEET 1 OF 1
ANDERSON MILL ROAD PHASE 2

CEDAR PARK



FILENAME: AMR-STD-FIRE-01.dgn
PLOTTED: 8/5/2022 3:55:51 PM

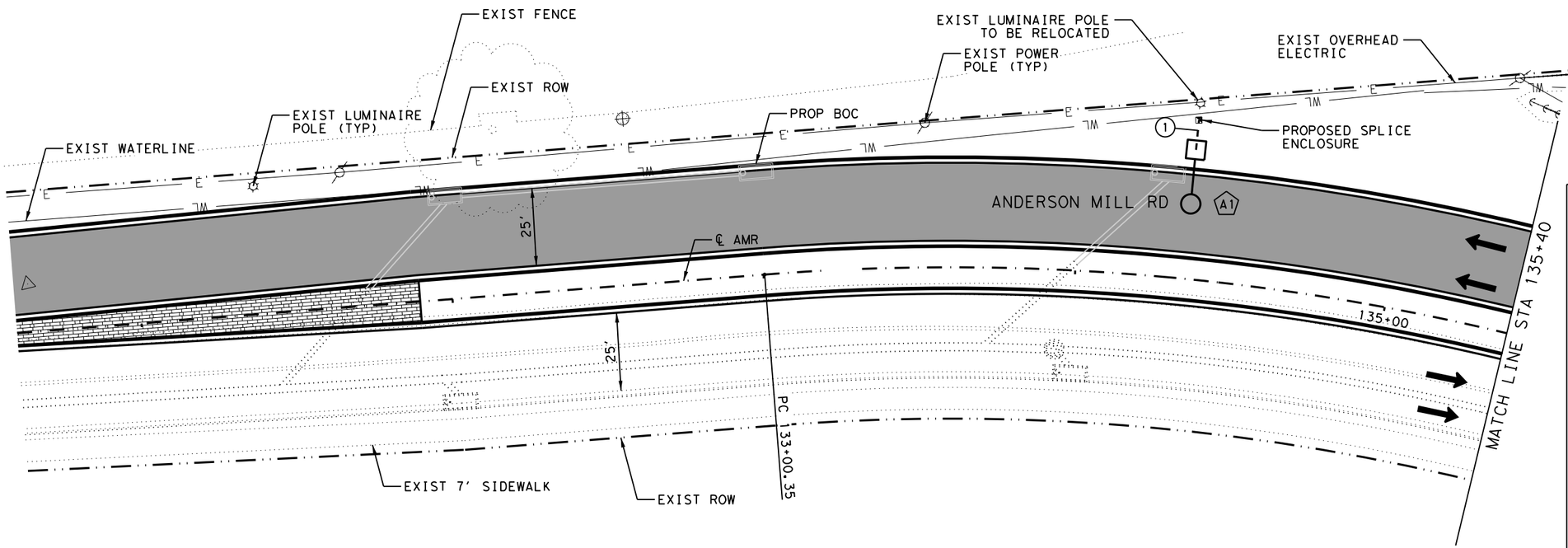


## LEGEND

- EXIST ROW
- EXIST EASEMENT
- PROP CONDUIT
- PROP BORED CONDUIT
- PROP ASPHALT PAVEMENT
- PROP ILLUM RELOCATION
- PROP SPLICE ENCLOSURE
- PROP TYPE A GROUNDBOX
- EXIST ILLUM POLE

0 20 40

| ESTIMATED QUANTITIES | | | | |
|---|---|---|---|---|
| ITEM | CODE | DESCRIPTION | UNIT | QUANTITY |
| 0416 | 6029 | DRILL SHAFT (RDWY ILL POLE) (30 IN) | LF | 10 |
| 0610 | 6002 | RELOCATE RD IL ASM (SHOE-BASE) | EA | 1 |
| 0618 | 6023 | CONDT (PVC) (SCH 40) (2") | LF | 20 |
| 0620 | 6007 | ELEC CONDR (NO.8) BARE | LF | 20 |
| 0620 | 6008 | ELEC CONDR (NO.8) INSULATED | LF | 40 |
| 0624 | 6010 | GROUND BOX TY D (162922)W/APRON | EA | 1 |

| CONDUIT AND CONDUCTOR RUNS FOR ILLUMINATION | | | | | | | | |
|---|---|---|---|---|---|---|---|---|
| RUN NO. | CONDUIT 2"PVC | TYP D GROUND BOX | CONDUCTORS | | | | SLACK | |
| | | | #8 INSULATED | | #8 BARE | | | |
| | TRENCHED (LF) | APRON | NO. OF CONDUCTORS | LF | NO. OF CONDUCTORS | LF | CONDUIT (LF) | WIRING (LF) |
| 1 | 15 | 1 | 2 | 30 | 1 | 15 | 5 | 5 |
| TOTALS | 20 | 1 | - | 40 | - | 20 | - | - |

| SUMMARY OF ROADWAY ILLUMINATION ASSEMBLIES | | | | | |
|---|---|---|---|---|---|
| POLE | ALIGN | STATION | OFFSET | DIRECTION | FND. (LF) |
| A1 | AMR | 134+35.0 | 41.5' | LEFT | 10 |

NOTES:

1. DIMENSIONS, STATIONS, AND OFFSETS GIVEN AT BACK OF CURB UNLESS OTHERWISE NOTED.
2. ALL UTILITIES TO BE LOCATED AND CONFIRMED BY THE CONTRACTOR IN THE FIELD PRIOR TO CONSTRUCTION.
3. PGL SHOWN IS BASED OFF MATCHING EDGE OF EXISTING ROADWAY AND WIDENING THE ROADWAY AT THE SAME CROSS-SLOPE AND/OR SUPERELEVATION OF EXISTING ROADWAY.

| NO | DATE | ISSUES AND REVISIONS |
|---|---|---|
| | | |

STATE OF TEXAS
VIVEK DESHPANDE
105960
LICENSED PROFESSIONAL ENGINEER
8/5/2022

Kimley»Horn F-928
10814 JOLLYVILLE ROAD
BLDG. 4, STE 200
AUSTIN, TX 78759
PHONE: 512-418-1771

# ILLUMINATION LAYOUT

SHEET 1 OF 3
ANDERSON MILL ROAD PHASE 2

CEDAR PARK



FILENAME: AMR*ILL*01.dgn
PLOTTED: 8/5/2022 3:56:19 PM

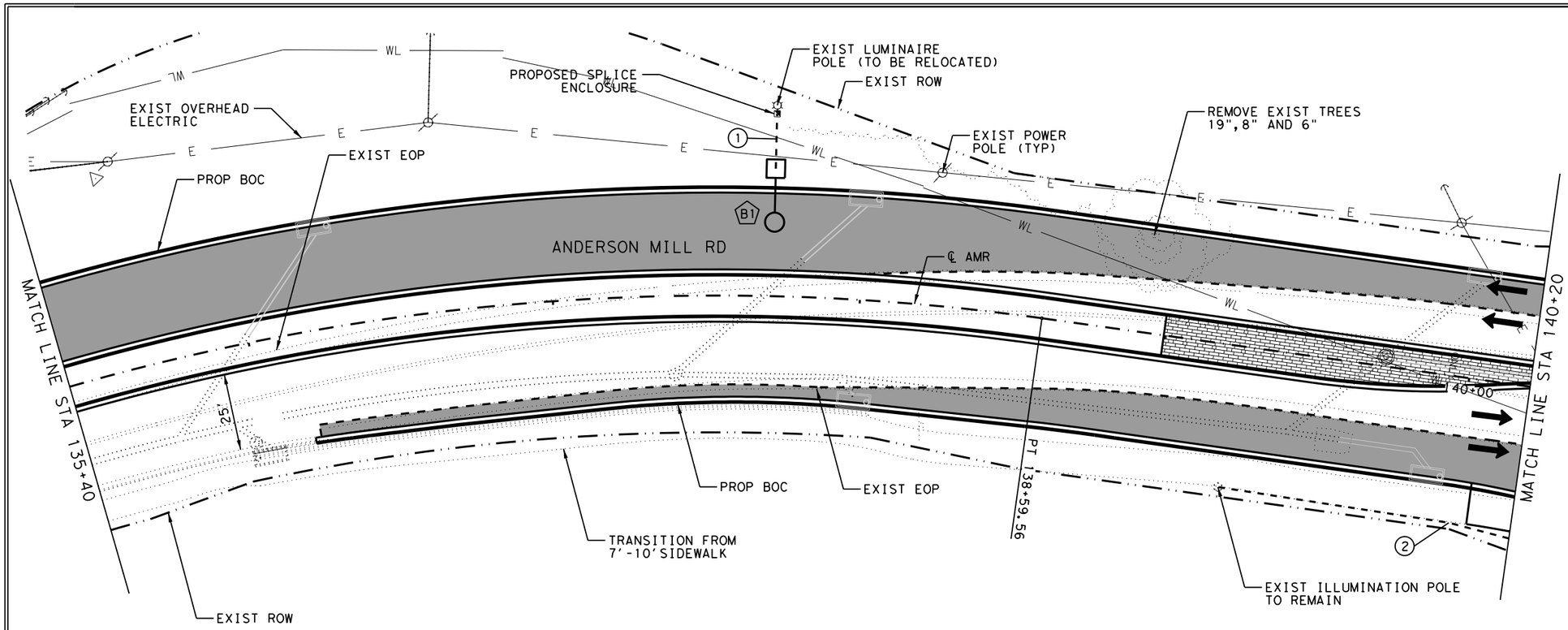


## LEGEND

- EXIST ROW
- EXIST EASEMENT
- PROP CONDUIT
- PROP BORED CONDUIT
- PROP ASPHALT PAVEMENT
- PROP ILLUM RELOCATION
- PROP SPLICE ENCLOSURE
- PROP TYPE A GROUNDBOX
- EXIST ILLUM POLE

0 20 40

*ESTIMATED QUANTITIES*

| ITEM | CODE | DESCRIPTION | UNIT | QUANTITY |
|---|---|---|---|---|
| 0416 | 6029 | DRILL SHAFT (RDWY ILL POLE) (30 IN) | LF | 10 |
| 0610 | 6002 | RELOCATE RD IL ASM (SHOE-BASE) | EA | 1 |
| 0618 | 6023 | CONDT (PVC) (SCH 40) (2") | LF | 130 |
| 0620 | 6007 | ELEC CONDR (NO.8) BARE | LF | 135 |
| 0620 | 6008 | ELEC CONDR (NO.8) INSULATED | LF | 270 |
| 0624 | 6002 | GROUND BOX TY A (122311)W/APRON | EA | 1 |

CONDUIT AND CONDUCTOR RUNS FOR ILLUMINATION

| RUN NO. | CONDUIT 2"PVC | TYP A GROUND BOX WITH APRON | CONDUCTORS | | | | SLACK | |
|---|---|---|---|---|---|---|---|---|
| | | | #8 INSULATED | | #8 BARE | | | |
| | TRENCHED (LF) | | NO. OF CONDUCTORS | LF | NO. OF CONDUCTORS | LF | CONDUIT (LF) | WIRING (LF) |
| 1 | 25 | 1 | 2 | 50 | 1 | 25 | 5 | 5 |
| 2 | 100 | | 2 | 200 | 1 | 100 | 5 | 5 |
| TOTALS | 130 | 1 | - | 270 | - | 135 | - | - |

SUMMARY OF ROADWAY ILLUMINATION ASSEMBLIES

| POLE | ALIGN | STATION | OFFSET | DIRECTION | FND. (LF) |
|---|---|---|---|---|---|
| B1 | AMR | 137+71.5 | 41.5' | LEFT | 10 |

NOTES:

1. DIMENSIONS, STATIONS, AND OFFSETS GIVEN AT BACK OF CURB UNLESS OTHERWISE NOTED.
2. ALL UTILITIES TO BE LOCATED AND CONFIRMED BY THE CONTRACTOR IN THE FIELD PRIOR TO CONSTRUCTION.
3. PGL SHOWN IS BASED OFF MATCHING EDGE OF EXISTING ROADWAY AND WIDENING THE ROADWAY AT THE SAME CROSS-SLOPE AND/OR SUPERELEVATION OF EXISTING ROADWAY.

| NO | DATE | ISSUES AND REVISIONS |
|---|---|---|

STATE OF TEXAS
VIVEK DESHPANDE
105960
LICENSED PROFESSIONAL ENGINEER
8/5/2022

Kimley»Horn F-928
10814 JOLLYVILLE ROAD
BLDG. 4, STE 200
AUSTIN, TX 78759
PHONE: 512-418-1771

# ILLUMINATION LAYOUT

SHEET 2 OF 3
ANDERSON MILL ROAD PHASE 2

CEDAR PARK



FILENAME: AMR*ILL*02.dgn
PLOTTED: 8/5/2022 3:56:30 PM

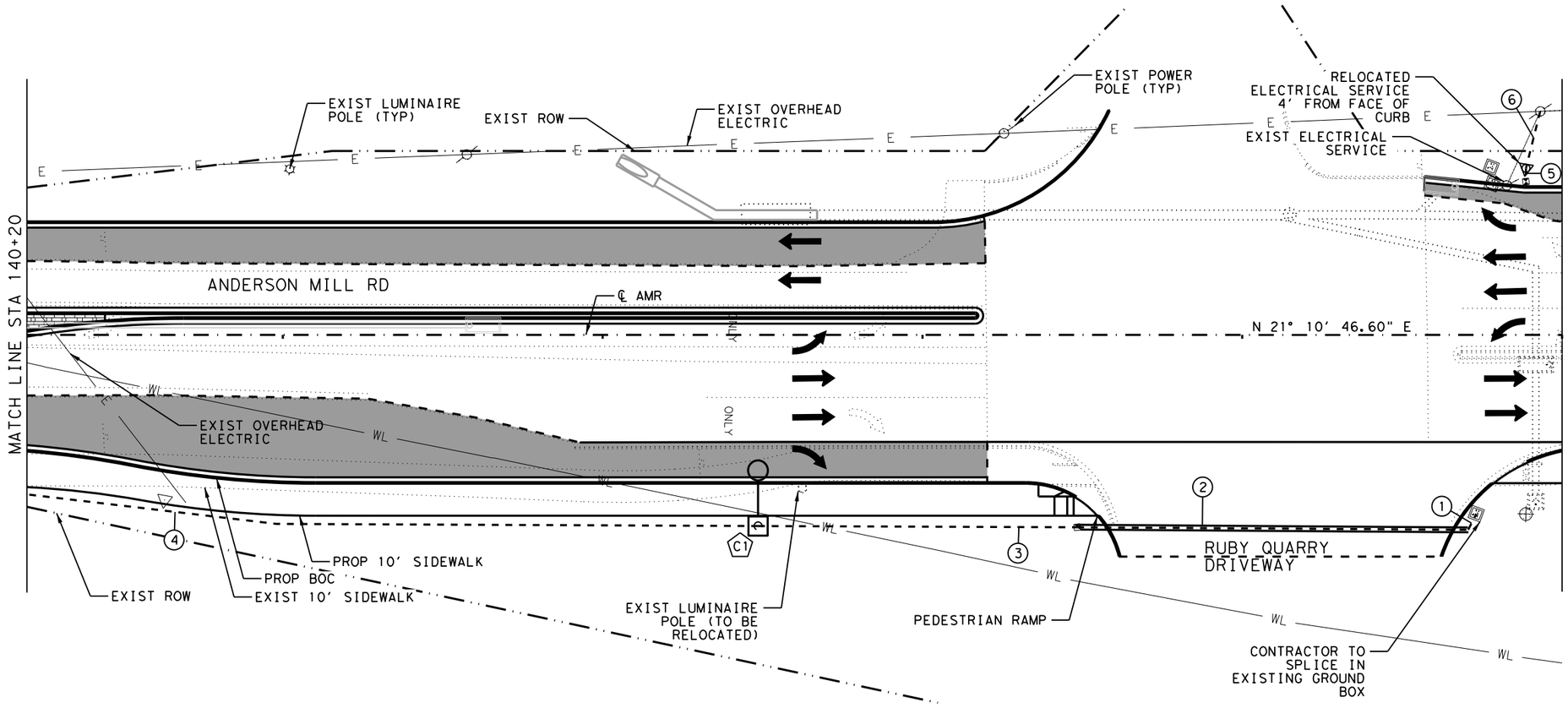


## LEGEND

- EXIST ROW
- EXIST EASEMENT
- PROP CONDUIT
- PROP BORED CONDUIT
- PROP ASPHALT PAVEMENT
- PROP ILLUM RELOCATION
- PROP SPLICE ENCLOSURE
- PROP TYPE D GROUNDBOX
- EXIST ILLUM POLE

0 20 40

| ESTIMATED QUANTITIES | | | | |
|---|---|---|---|---|
| ITEM | CODE | DESCRIPTION | UNIT | QUANTITY |
| 0416 | 6029 | DRILL SHAFT (RDWY ILL POLE) (30 IN) | LF | 10 |
| 0610 | 6002 | RELOCATE RD IL ASM (SHOE-BASE) | EA | 1 |
| 0618 | 6023 | CONDT (PVC) (SCH 40) (2") | LF | 425 |
| 0618 | 6024 | CONDT (PVC) (SCH 40) (2") (BORE) | LF | 130 |
| 0620 | 6007 | ELEC CONDR (NO. 8) BARE | LF | 555 |
| 0620 | 6008 | ELEC CONDR (NO. 8) INSULATED | LF | 1,110 |
| 0624 | 6002 | GROUND BOX TY A (122311)W/APRON | EA | 2 |
| 0628 | 6001 | RELOCATE ELECTRICAL SERVICES | EA | 1 |

| CONDUIT AND CONDUCTOR RUNS FOR ILLUMINATION | | | | | | | | | |
|---|---|---|---|---|---|---|---|---|---|
| RUN NO. | CONDUIT 2"PVC | | TYP A GROUND BOX WITH APRON | CONDUCTORS | | | | SLACK | |
| | | | | #8 INSULATED | | #8 BARE | | | |
| | BORED (LF) | TRENCHED (LF) | | NO. OF CONDUCTORS | LF | NO. OF CONDUCTORS | LF | CONDUIT (LF) | WIRING (LF) |
| 1 | - | 75 | 1 | 2 | 150 | 1 | 75 | 5 | 5 |
| 2 | 125 | - | 1 | 2 | 250 | 1 | 125 | 5 | 5 |
| 3 | - | 105 | 1 | 2 | 210 | 1 | 105 | 5 | 5 |
| 4 | - | 230 | - | 2 | 460 | 1 | 230 | 5 | 5 |
| TOTALS | 130 | 425 | 3 | - | 1110 | - | 555 | - | - |

| SUMMARY OF ROADWAY ILLUMINATION ASSEMBLIES | | | | | |
|---|---|---|---|---|---|
| POLE | ALIGN | STATION | OFFSET | DIRECTION | FND. (LF) |
| C1 | AMR | 142+48.5 | 60.0' | RIGHT | 10 |

NOTES:

1. DIMENSIONS, STATIONS, AND OFFSETS GIVEN AT BACK OF CURB UNLESS OTHERWISE NOTED.
2. ALL UTILITIES TO BE LOCATED AND CONFIRMED BY THE CONTRACTOR IN THE FIELD PRIOR TO CONSTRUCTION.
3. PGL SHOWN IS BASED OFF MATCHING EDGE OF EXISTING ROADWAY AND WIDENING THE ROADWAY AT THE SAME CROSS-SLOPE AND/OR SUPERELEVATION OF EXISTING ROADWAY.

| NO | DATE | ISSUES AND REVISIONS |
|---|---|---|

STATE OF TEXAS
VIVEK DESHPANDE
105960
LICENSED PROFESSIONAL ENGINEER
8/5/2022

Kimley»Horn F-928
10814 JOLLYVILLE ROAD
BLDG. 4, STE 200
AUSTIN, TX 78759
PHONE: 512-418-1771

# ILLUMINATION LAYOUT

SHEET 3 OF 3
ANDERSON MILL ROAD PHASE 2

CEDAR PARK



FILENAME: AMR*ILL*03.dgn
PLOTTED: 8/5/2022 3:56:36 PM

DISCLAIMER:
The use of this standard is governed by the "Texas Engineering Practice Act". No warranty of any kind is made by TxDOT for any purpose whatsoever. TxDOT assumes no responsibility for the conversion of this standard to other formats or for incorrect results or damages resulting from its use.

## GENERAL NOTES FOR ALL ELECTRICAL WORK

1. The location of all conduits, junction boxes, ground boxes, and electrical services is diagrammatic and may be shifted to accommodate field conditions.

2. Provide new and unused materials. Ensure that all materials and installations comply with the applicable articles of the National Electrical Code (NEC), TxDOT standards and specifications, National Electrical Manufacturers Association (NEMA), and are listed by Underwriters Laboratories (UL) or a Nationally Recognized Testing Lab (NRTL). NRTLs such as Canadian Standard Association (CSA), Intertek Testing Services NA Inc., or FM Approvals LLC can be considered equivalent to UL. Where reference is made to NEMA listed devices, International Electrotechnical Commission (IEC) listed devices will not be considered an acceptable equal to a NEMA listed device. Acceptable devices may have both a NEMA and IEC listing. Faulty fabrication or poor workmanship in any material, equipment, or installation is justification for rejection. Replace or reinstall rejected material or equipment at no additional cost to the Department.

3. Miscellaneous nuts, bolts and hardware, except for high strength bolts, may be stainless steel when plans specify galvanized, provided the bolt size is ½ in. or less in diameter.

4. Provide the following test equipment as required by the Engineer to confirm compliance with the contract and the NEC: voltmeter, ammeter, megohm meter (1000 volt DC), ground resistance tester, torque wrenches, and torque screwdrivers. Ensure all equipment has been properly calibrated within the last year. Provide calibration certification to the Engineer upon request. Operate test equipment during inspection as requested by the Engineer.

5. Install grounding as shown on the plans and in accordance with the NEC. Ensure all metallic conduits; metal poles; luminaires; and metal enclosures are bonded to the equipment grounding conductor. Provide stranded bare copper or green insulated grounding conductors. Ground rods, connectors, and bonding jumpers are subsidiary to the various bid items.

6. When required by the Engineer, notify the Department in writing of materials from the Material Producers List (MPL) intended for use on each project. Prequalified materials are listed on the MPL on TxDOT's website under "Roadway Illumination and Electrical Supplies." No substitutions will be allowed for materials on this list.

## CONDUIT

A. MATERIALS

1. Provide conduit, junction boxes, fittings, and hardware as per TxDOT Departmental Material Specification (DMS) 11030 "Conduit" and Item 618 "Conduit" of TxDOT's "Standard Specifications For Construction And Maintenance Of Highways, Streets, And Bridges," latest edition. Provide conduits listed under Item 618 on the MPL under "Roadway Illumination and Electrical Supplies." Provide conduit types according to the descriptive code or as shown on the plans. Do not substitute other types of conduits for those shown. Provide liquidtight flexible metal conduit (LFMC) when flexible conduit is called for on galvanized steel rigid metallic conduit (RMC) systems. Provide liquidtight flexible nonmetallic conduit (LFNC) when flexible conduit is called for on polyvinyl chloride (PVC) systems.

2. Provide galvanized steel RMC for all exposed conduits, unless otherwise shown on the plans. Properly bond all metal conduits.

3. Unless otherwise shown on the plans, provide junction boxes with a minimum size as shown in the following table, which applies to the greatest number of conductors entering the box through one conduit with no more than four conduits per box. When a mixture of conductor sizes is present, count the conductors as if all are of the larger size. For situations not applicable to the table, size junction boxes in accordance with NEC.

| AWG | 3 CONDUCTORS | 5 CONDUCTORS | 7 CONDUCTORS |
|---|---|---|---|
| #1 | 10" x 10" x 4" | 12" x 12" x 4" | 16" x 16" x 4" |
| #2 | 8" x 8" x 4" | 10" x 10" x 4" | 12" x 12" x 4" |
| #4 | 8" x 8" x 4" | 10" x 10" x 4" | 10" x 10" x 4" |
| #6 | 8" x 8" x 4" | 8" x 8" x 4" | 10" x 10" x 4" |
| #8 | 8" x 8" x 4" | 8" x 8" x 4" | 8" x 8" x 4" |

4. Junction boxes with an internal volume of less than 100 cu. in. and supported by entering raceways must have threaded entries or hubs identified for the intended purpose and supported by connection of two or more rigid metal conduits. Secure conduit within 3 ft. of the enclosure or within 18 in. of the enclosure if all conduit entries are on the same side. Mechanically secure all junction boxes with an internal volume greater than 100 cu. inches.

5. Provide hot dipped galvanized cast iron or sand cast aluminum outlet boxes for junction boxes containing only 10 AWG or 12 AWG conductors. Do not use die cast aluminum boxes. Size outlet boxes according to the NEC.

6. Do not use intermediate metal conduit (IMC) or electrical metallic tubing (EMT) unless specifically required by the plan sheets. When EMT is called for, provide junction boxes made from galvanized steel sheeting, listed and approved for outdoor use, unless otherwise noted on the plans. Size all galvanized steel junction boxes in accordance with the NEC. Provide junction boxes for IMC conduit systems that meet the same requirements for junction boxes used with RMC systems.

7. Provide PVC junction boxes intended for outdoor use on PVC conduit systems, unless otherwise noted on the plans.

8. Provide PVC elbows in PVC conduit systems, unless otherwise shown on the plans. Use only a flat, high tensile strength polyester fiber pull tape for pulling conductors through the PVC conduit system. When galvanized steel RMC elbows are specifically called for in the plans and any portion of the RMC elbow is buried less than 18 in., ground the RMC elbow by means of a grounding bushing on a rigid metal extension. Grounding of the rigid metal elbow is not required if the entire RMC elbow is encased in a minimum of 2 in. of concrete. PVC extensions are allowed on these concrete encased rigid metal elbows. RMC or PVC elbows are subsidiary to various bid items.

9. When required, provide High-Density Polyethylene (HDPE) conduit with factory installed internal conductors according to Item 622 "Duct Cable." At the Contractor's request and with approval by the Engineer, substitute HDPE conduit with no conductors for bored schedule 40 or schedule 80 PVC conduit bid under Item 618. Ensure bored HDPE substituted for PVC is schedule 40 and of the same size PVC called for in the plans. Ensure the substituted HDPE meets the requirements of Item 622, except that the conduit is supplied without factory-installed conductors. Make the transition of the HDPE conduit to PVC (or RMC elbow when required) at the bore pit. Provide conduit of the size and schedule as shown on the plans. Do not extend substituted conduit into ground boxes or foundations. Provide PVC or galvanized steel RMC elbows as called for at all ground boxes and foundations.

10. Use two-hole straps when supporting 2 in. and larger conduits. On electrical service poles, properly sized stainless steel or hot dipped galvanized one-hole standoff straps are allowed on the service riser conduit.

B. CONSTRUCTION METHODS

1. Provide and install expansion joint conduit fittings on all structure-mounted conduits at the structure's expansion joints to allow for movement of the conduit. In addition, provide and install expansion joint fittings on all continuous runs of galvanized steel RMC conduit externally exposed on structures such as bridges at maximum intervals of 150 ft. When requested by the project Engineer, supply manufacturer's specification sheet for expansion joint conduit fittings. Repair or replace expansion joint fittings that do not allow for movement at no additional cost to the Department. Provide the method of determining the amount of expansion to the Engineer upon request. Do not use LFMC or LFNC as a substitute for the required expansion conduit fittings.

2. Space all conduit supports at maximum intervals of 5 ft. Install conduit spacers when attaching metal conduit to surface of concrete structures. See "Conduit Mounting Options" on ED(2). Install conduit support within 3 ft. of all enclosures and conduit terminations.

3. Do not attach conduit supports directly to pre-stressed concrete beams except as shown specifically in the plans or as approved by the Engineer.

4. Unless otherwise shown on the plans, jack or bore conduit placed beneath existing roadways, driveways, sidewalks, or after the base or surfacing operation has begun. Backfill and compact the bore pits below the conduit per Item 476 "Jacking, Boring, or Tunneling Pipe or Box" prior to installing conduit or duct cable to prevent bending of the connections.

5. When placing conduit in the sub-grade of new roadways, backfill all trenches with excavated material unless otherwise noted on the plans. When placing conduit in the sub-base of new roadways, backfill all trenches with cement-stabilized base as per requirements of Items 110 "Excavation", 400 "Excavation and Backfill for Structures", 401 "Flowable Backfill", 402 "Trench Excavation Protection", and 403 "Temporary Special Shoring."

6. Provide and place warning tape approximately 10 in. above all trenched conduit as per Item 618.

7. During construction, temporarily cap or plug open ends of all conduit and raceways immediately after installation to prevent entry of dirt, debris and animals. Temporary caps constructed of durable duct tape are allowed. Tightly fix the tape to the conduit opening. Clean out the conduit and prove it clear in accordance with Item 618 prior to installing any conductors.

8. Ensure conduit entry into the top of any enclosure is waterproof by installing conduit sealing hubs or using boxes with threaded bosses. This includes surface mounted safety switches, meter cans, service enclosures, auxiliary enclosures and junction boxes. Grounding bushings on water tight sealing hubs are not required.

9. Fit the ends of all PVC conduit terminations with bushings or bell end fittings. Provide and install a grounding type bushing on all metal conduit terminations.

10. Install a bonding jumper from each grounding bushing to the nearest ground rod, grounding lug, or equipment grounding conductor. Ensure all bonding jumpers are the same size as the equipment grounding conductor. Bonding of conduit used as a casing under roadways for duct cable is not required, if the duct extends the full length through the casing.

11. At all electrical services, install a 6 AWG solid copper grounding electrode conductor.

12. Place conduits entering ground boxes so that the conduit openings are between 3 in. and 6 in. from the bottom of the box. See the ground box detail on sheet ED(4).

13. Seal ends of all conduits with duct seal, expandable foam, or by other methods approved by the Engineer. Seal conduit immediately after completion of conductor installation and pull tests. Do not use duct tape as a permanent conduit sealant. Do not use silicone caulk as a conduit sealant.

14. File smooth the cut ends of all mounting strut and conduit. Before installing, paint the field cut ends of all mounting strut and RMC (threaded or non-threaded) with zinc rich paint (94% or more zinc content) to alleviate overspray. Use zinc rich paint to touch up galvanized material as allowed under Item 445 "Galvanizing." Do not paint non-galvanized material with a zinc rich paint as an alternative for materials required to be galvanized.

Texas Department of Transportation

Traffic Operations Division Standard

# ELECTRICAL DETAILS CONDUITS & NOTES

## ED(1)-14

| FILE: | ed1-14.dgn | DN: | CK: | DW: | CK: |
|---|---|---|---|---|---|
| ©TxDOT | October 2014 | CONT | SECT | JOB | HIGHWAY |
| | REVISIONS | | | | |
| | | DIST | | COUNTY | SHEET NO. |
| | | | | | 117 |

71A

DATE:
FILE:

DISCLAIMER:
The use of this standard is governed by the "Texas Engineering Practice Act". No warranty of any kind is made by TxDOT for any purpose whatsoever. TxDOT assumes no responsibility for the conversion of this standard to other formats or for incorrect results or damages resulting from its use.

## ELECTRICAL CONDUCTORS

A. MATERIAL INFORMATION

1. Provide Type XHHW insulated conductors in accordance with Departmental Material Specification (DMS)11040 "Conductors" and Item 620 "Electrical Conductors." Provide conductors as listed on the Material Producers List (MPL) on the Department web site under "Roadway Illumination and Electrical Supplies" Item 620. Color code insulated conductors in conformance with the NEC. Identify grounded (neutral) conductors with white insulation. Identify grounding conductors (ground wires) with green insulation or bare conductors. Identify ungrounded (hot) conductors with any color insulation except green, white, or gray. Keep color scheme consistent throughout the wiring system. Identify conductors 6 American Wire Gauge (AWG) and smaller by continuous color jacket. Identify electrical conductors 4 AWG and larger by continuous color jacket or by colored tape. When identifying conductors with colored tape, mark at least 6 in. of the conductor's insulation with half laps of tape.

2. Provide a solid copper 6 AWG grounding electrode conductor to bond the electrical service equipment to the concrete encased grounding electrode or the ground rod at the service location. Connect the grounding electrode conductor to the ground rod with a UL listed connector in accordance with DMS 11040. Connect the grounding electrode conductor to the concrete encased grounding electrode as shown in the plans.

3. Where two or more circuits are present in one conduit or enclosure, permanently identify the conductors of each branch circuit by attaching a non-metallic tag around both circuit conductors at each accessible location. Provide tags with two straps, large enough to indicate circuit number, letter, or other identification as shown in the plans. Print circuit identification on the tag with a permanent marker.

4. Use listed compression or screw type pressure connectors, terminal blocks, or split bolt connectors for splicing as specified in DMS 11040. Use hot melt adhesive tape to fill the gap and seal the ends of heat shrink tubing. Provide UL listed gel-filled insulating splice covers. Splicing materials, insulating materials, breakaway disconnects, splice covers, and fuse holders are subsidiary to various bid items.

B. CONSTRUCTION METHODS

1. Use only a flat, high tensile strength polyester fiber pull tape for pulling conductors through the conduit system. After installing conductors in conduit, perform conductor pull test. If a conductor cannot be freely pulled, make any needed alterations or repairs at no additional cost to the department. Perform insulation resistance tests in accordance with Item 620. Coordinate with the Engineer to witness the tests.

2. Leave 2 ft. minimum, 3 ft. maximum length for each conductor up to the splice in ground boxes. Leave 3 ft. minimum, 4 ft. maximum length of conductor in ground boxes when pulled through with no splice. Leave 1 ft. minimum, 1.5 ft. maximum length of conductor at enclosures, weatherheads and pole bases.

3. Make splices only in junction boxes, ground boxes, pole bases, or electrical enclosures and use only listed compression or screw type pressure connectors, terminal blocks, or split bolt connectors. Insulate splices with heavy wall heat shrink tubing or gel-filled insulating splice covers to provide a watertight splice. Overlap conductor insulation with heat shrink tubing a minimum of 2 in. past both sides of the splice. Where heat shrink tubing may not shrink sufficiently to provide a watertight seal around the individual conductors, prior to heating the tubing, increase the diameter of the conductor insulation using hot melt adhesive tape to provide a watertight seal between the individual conductors and the heat shrink tubing. Ensure the tape extends past the heat shrink tubing. Use hot melt adhesive tape to fill the gap and seal the ends of heat shrink tubing. Heat shrink tubing that appears to have been burned, or overheated, is considered defective and must be replaced.

4. Size and install gel-filled insulating splice covers according to manufacturer's specifications when used in place of heat shrink tubing.

5. Wire nuts with factory applied waterproof sealant may be used for 8 AWG or smaller conductors in above ground junction boxes, but not in pole bases or ground boxes. Install wire nuts in an upright position to prevent the accumulation of water.

6. Support conductors in illumination poles with a J-hook at the top of the pole.

7. When terminating conductors, remove the insulation and jacketing material without nicking the individual strands of the conductor. Conductors with nicked individual conductor strands or removed strands will be considered damaged.

8. Replace conductors and cables that are damaged beyond repair or that fail an insulation resistance test at no additional cost to the department.

9. Do not repair damaged conductors with duct tape, electrical tape, or wire nuts. Use only approved splicing methods.

10. Do not terminate more than one conductor under a single connector, unless the connector is rated for multiple conductors. Do not exceed the pressure connector's listing for maximum number and size of conductors allowed.

11. Install breakaway connectors on conductors bid under Item 620 whenever those conductors pass through a breakaway support device. Follow manufacturer's instructions when terminating conductors to breakaway connectors. Properly torque threaded connections. Proper terminations are critical to the safe operation of breakaway devices. Trim waterproofing boots on breakaway connectors to fit snugly around the conductor to ensure waterproof connection. Only one conductor may enter a single opening in a boot. Provide waterproof boots with the correct number of openings. Leave unused openings factory sealed. Use prequalified breakaway connectors as shown on the MPL.

12. Provide and install a separate stranded equipment grounding conductor (EGC) in all conduits that contain circuit wiring of 50 volts or more. Unless shown elsewhere, size the EGC to be the same size as the largest current carrying conductor contained in the conduit. Ensure all EGCs are bonded together at every accessible location. For traffic signal installations, provide a minimum size 8 AWG EGC. The EGC is paid for under Item 620.

C. TEMPORARY WIRING

1. Install temporary conductors and electrical equipment in accordance with the NEC article "Temporary Installations" and Department standard sheets.

2. Provide a ground fault circuit interrupter (GFCI) for power outlets for portable electrical equipment, power tools, ice machines, ice storage bins and refrigerators located outdoors at grade. GFCI may be any one of the following: molded cord and plug set, receptacle, or circuit breaker type.

3. Use listed wire nuts with factory applied sealant for temporary wiring where approved.

4. Enclose conductor splices within a listed enclosure or ground box, or ensure the splices are more than 10 ft. above grade vertically and more than 5 ft. horizontally from any metal structure. Where installing temporary conductors in areas subject to vehicle traffic or mobile construction equipment, ensure the vertical clearance to ground is at least 18 ft. when measured at the lowest point. Ground messenger wires that support power conductors in conformance with the NEC.

5. Protect and when necessary repair any existing electrical conduits uncovered during the construction process in a timely manner and in conformance with the NEC.

## GROUND RODS & GROUNDING ELECTRODES

A. MATERIAL INFORMATION

1. Provide and install a grounding electrode at electrical services. Provide ground rods according to DMS 11040 and the plans. Larger diameter or longer length rods may be called for in some specific locations, see the individual plans sheets. Concrete encased grounding electrodes may be called for in specific locations including electrical service, see individual plan sheets.

B. CONSTRUCTION METHODS

1. Furnish auxiliary ground rods for lightning protection and install in soil, concrete, or both, as called for in the plans. For ground rods installed in concrete, ensure the connection of the conductor to the ground rod is readily accessible for inspection or repairs. For ground rods installed in soil, ensure that the upper end is between 2 to 4 in. below finished grade.

2. Do not place ground rods in the same drilled hole as a timber pole.

3. Install ground rods so the imprinted part number is at the upper end of the rod.

4. Remove all non-conductive coatings such as concrete splatter from the rod at the clamp location.

5. Route all conductors as short and straight as possible for connection to lightning protection ground rods. When a bend is required, ensure a minimum radius bend of four inches for these conductors.

6. Unless otherwise called for in the plans, protect grounding electrode conductors with non-metallic conduit. When protecting grounding electrode conductors with metal conduit, provide and install a grounding type bushing and properly sized bonding jumper on each end of the metal conduit.

7. Written authorization is required before installing a ground rod in a horizontal trench for rocky soil or a solid rock bottom.

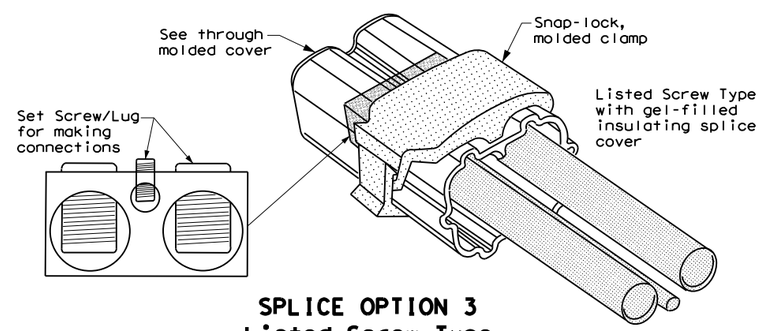


**SPLICE OPTION 3**
**Listed Screw Type**

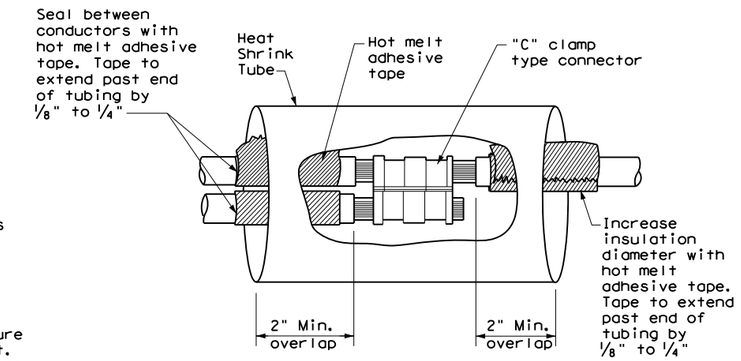


**SPLICE OPTION 1**
**Compression Type**

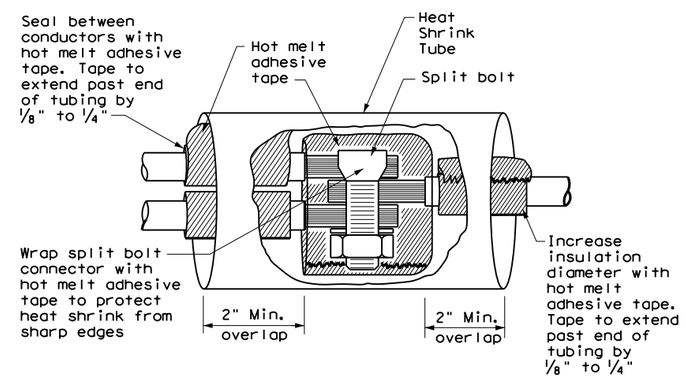


**SPLICE OPTION 2**
**Split Bolt Type**

Texas Department of Transportation — Traffic Operations Division Standard

# ELECTRICAL DETAILS CONDUCTORS

# ED(3)-14

| FILE: ed3-14.dgn | DN: TxDOT | CK: TxDOT | DW: TxDOT | CK: TxDOT |
|---|---|---|---|---|
| © TxDOT October 2014 | CONT | SECT | JOB | HIGHWAY |
| REVISIONS | DIST | | COUNTY | SHEET NO. 118 |

71C

DATE:
FILE:

DISCLAIMER:
The use of this standard is governed by the "Texas Engineering Practice Act". No warranty of any kind is made by TxDOT for any purpose whatsoever. TxDOT assumes no responsibility for the conversion of this standard to other formats or for incorrect results or damages resulting from its use.

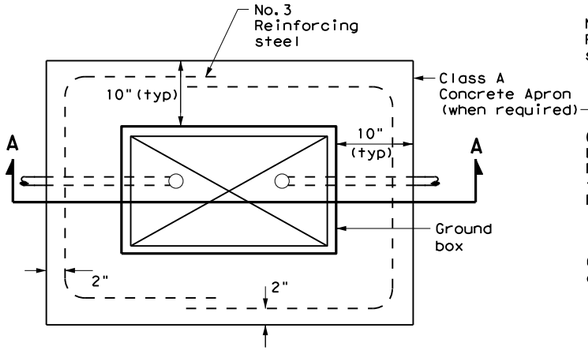


PLAN VIEW

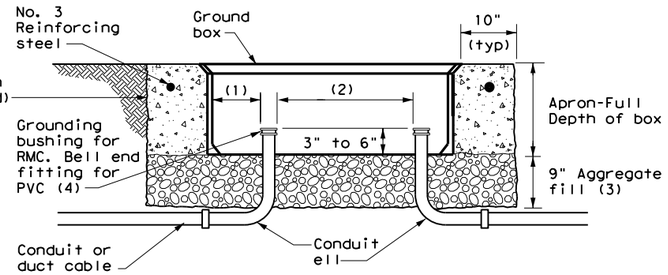


SECTION A - A

## APRON FOR GROUND BOX

(1) Uniformly space ends of conduits within the ground box. Position ends of conduits so that ground box walls do not interfere with the installation of grounding bushings or bell end fittings.

(2) Maintain sufficient space between conduits to allow for proper installation of bushing.

(3) Place aggregate under the box, not in the box. Aggregate should not encroach on the interior volume of the box.

(4) Install a grounding bushing on the upper end of all RMC terminating in a ground box. Ground RMC elbows when any part of the elbow is less than 18 in. below the bottom of the ground box. Install a PVC bushing or bell end fitting on the upper end of all PVC conduits terminating in a ground box.

| GROUND BOX DIMENSIONS | |
|---|---|
| TYPE | OUTSIDE DIMENSIONS (INCHES) (Width x Length X Depth) |
| A | 12 X 23 X 11 |
| B | 12 X 23 X 22 |
| C | 16 X 29 X 11 |
| D | 16 X 29 X 22 |
| E | 12 X 23 X 17 |

## GROUND BOXES

A. MATERIALS

1. Provide polymer concrete ground boxes measuring 16x30x24 in. (WxLxD) or smaller in accordance with Departmental Material Specification (DMS) 11070 "Ground Boxes" and Item 624 "Ground Boxes."

2. Provide Type A, B, C, D, and E ground boxes as shown in the plans, and as listed on the Material Producers List (MPL) on the Department web site under "Roadway Illumination and Electrical Supplies," Item 624.

3. Ensure ground box cover is correctly labeled in accordance with DMS 11070.

4. Provide larger ground boxes in accordance with Item 624 and as shown in the plans.

B. CONSTRUCTION METHODS

1. Remove all gravel and dirt from conduit. Cap all conduits prior to placing aggregate and setting ground box. Provide Grade 3 or 4 coarse aggregate as shown on Table 2 of Item 302 "Aggregates for Surface Treatments." Ensure aggregate bed is in place and at least 9 inches deep, prior to setting the ground box. Install ground box on top of aggregate.

2. Cast ground box aprons in place. Reinforcing steel may be field bent. Ensure the depth of concrete for the apron extends from finished grade to the top of the aggregate bed under the box. Ground box aprons, including concrete and reinforcing steel, are subsidiary to ground boxes when called for by descriptive code.

3. Keep bolt holes in the box clear of dirt. Bolt covers down when not working in ground boxes.

4. Install all conduits and ells in a neat and workmanlike manner. Uniformly space conduits so grounding bushings and bell end fittings can easily be installed.

5. Temporarily seal all conduits in the ground box until conductors are installed.

6. Permanently seal conduits immediately after the completion of conductor installation and pull tests. Permanently seal the ends of all conduits with duct seal, expandable foam, or other method as approved. Do not use duct tape as a permanent conduit sealant. Do not use silicone caulk as a sealant.

7. When a ground rod is present in a ground box, bond all equipment grounding conductors together and to the ground rod with listed connectors.

8. When a type B or D ground box is stacked to meet volume requirements, it is allowable to cut an appropriately sized hole for conduit entry in the side wall at least 18 inches below grade.

9. If an existing ground box in the contract has a metal cover, bond the cover to the equipment grounding conductor with a 3 ft. long stranded bonding jumper the same size as the grounding conductor. The bonding jumper is subsidiary to various bid items. Verify existing ground boxes with metal covers are shown on the plans, with notes fully describing the work required.

10. If other ground boxes with metal covers are within the project limits but are not part of the contract, the Engineer may direct the Contractor to bond the metal covers, identifying the specific boxes in writing. This work will be paid for separately.

11. Bond metal ground box covers to the grounding conductor with a tank ground type lug.

| GROUND BOX COVER DIMENSIONS | | | | | | | | |
|---|---|---|---|---|---|---|---|---|
| TYPE | DIMENSIONS (INCHES) | | | | | | | |
| | H | I | J | K | L | M | N | P |
| A, B & E | 23 1/4 | 23 | 13 3/4 | 13 1/2 | 9 7/8 | 5 1/8 | 1 3/8 | 2 |
| C & D | 30 1/2 | 30 1/4 | 17 1/2 | 17 1/4 | 13 1/4 | 6 3/4 | 1 3/8 | 2 |

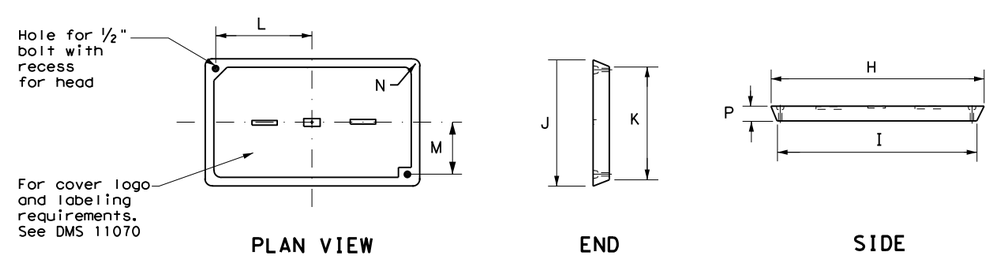


PLAN VIEW END SIDE

GROUND BOX COVER

Texas Department of Transportation

Traffic Operations Division Standard

# ELECTRICAL DETAILS GROUND BOXES

# ED(4)-14

| FILE: ed4-14.dgn | DN: TxDOT | CK: TxDOT | DW: TxDOT | CK: TxDOT |
|---|---|---|---|---|
| © TxDOT October 2014 | CONT | SECT | JOB | HIGHWAY |
| REVISIONS | | | | |
| | DIST | COUNTY | | SHEET NO. |
| | | | | 119 |

71D

DATE:
FILE:

DISCLAIMER:
The use of this standard is governed by the "Texas Engineering Practice Act". No warranty of any kind is made by TxDOT for any purpose whatsoever. TxDOT assumes no responsibility for the conversion of this standard to other formats or for incorrect results or damages resulting from its use.

## ELECTRICAL SERVICES NOTES

1. Provide new materials. Ensure installation and materials comply with the applicable provisions of the National Electrical Code (NEC) and National Electrical Manufacturers Association (NEMA) standards. Ensure material is Underwriters Laboratories (UL) listed. Provide and install electrical service conduits, conductors, disconnects, contactors, circuit breaker panels, and branch circuit breakers as shown on the Electrical Service Data chart in the plans. Faulty fabrication or poor workmanship in material, equipment, or installation is justification for rejection. Where manufacturers provide warranties and guarantees as a customary trade practice, furnish these to the State.

2. Provide electrical services in accordance with Electrical Details standard sheets, Departmental Material Specification (DMS) 11080 "Electrical Services,"DMS 11081 "Electrical Services-Type A," DMS 11082 "Electrical Services-Type C," DMS 11083 "Electrical Services-Type D," DMS 11084 "Electrical Services-Type T," DMS 11085 "Electrical Services-Pedestal (PS)", and Item 628 "Electrical Services" of the Standard Specifications. Provide electrical service types A, C, and D, as listed on the Material Producers List (MPL) on the Department web site under "Roadway Illumination and Electrical Supplies," Item 628. Provide other service types as detailed on the plans.

3. Provide all work, materials, services, and any incidentals needed to install a complete electrical service as specified in the plans.

4. Coordinate with the Engineer and the utility provider for metering and compliance with utility requirements. Primary line extensions, connection charges, meter charges, and other charges by the utility company to provide power to the location are paid for in accordance with Item 628. Get approval for the costs associated with these charges prior to engaging the utility company to do the work. Consult with the utility provider to determine costs and requirements, and coordinate the work as approved.

5. The enclosure manufacturer will provide Master Lock Type 2 with brass tumblers keyed #2195 for all custom electrical enclosures. Installing Contractor is to provide Master Lock #2195 Type 2 with brass tumblers for "off the shelf" enclosures. Master Lock #2195 keys and locks become property of the State. Unless otherwise approved, do not energize electrical service equipment until locks are installed.

6. Enclosures with external disconnects that de-energize all equipment inside the enclosure do not need a dead front trim. Protect incoming line terminations from incidental contact as required by the NEC.

7. When galvanized is specified for nuts, screws, bolts or miscellaneous hardware, stainless steel may be used.

8. Provide wiring and electrical components rated for 75°C. Provide red, black, and white colored XHHW service entrance conductors of minimum size 6 American Wire Gauge (AWG). Identify size 6 AWG conductors by continuous color jacket. Identify electrical conductors sized 4 AWG and larger by continuous color jacket or by colored tape. Mark at least 6 inches of the conductor's insulation with half laps of colored tape, when identifying conductors. Ensure each service entrance conductor exits through a separately bushed non-metallic opening in the weatherhead. The lengths of the conductors outside the weatherhead are to be 12 inches minimum, 18 inches maximum, or as required by utility.

9. All electrical service conduit and conductors attached to the electrical service including the riser or the elbow below ground are subsidiary to the electrical service. For an underground utility feed, all service conduit and conductors after the elbow, including service conduit and conductors for the utility pole riser when furnished by the Contractor, will be paid for separately.

10. Provide rigid metal conduit (RMC) for all conduits on service, except for the ½ in. PVC conduit containing the electrical service grounding electrode conductor. Size the service entrance conduit as shown in the plans. Ensure conduit for branch circuit entry to enclosure is the same size as that shown on the layout sheets for branch circuit conduit. Extend all rigid metal conduits a minimum of 6 inches underground and then couple to the type and schedule of the conduit shown on the layout for that particular branch circuit. Install a grounding bushing on the RMC where it terminates in the service enclosure.

11. Use of liquidtight flexible metal conduit (LFMC) is allowed between the meter and service enclosure when they are mounted 90 to 180 degrees to each other. Size the LFMC the same size as service entrance conduit. LFMC must not exceed 3 feet in length. Strap LFMC within 1 foot of each end. LFMC less than 12 inches in length need not be strapped. Each end of LFMC must have a grounding bushing or be terminated with a grounding fitting. The LFMC must contain a grounded (neutral) conductor. Ensure any bend in LFMC never exceeds 180 degrees. A pull test is required on all installed conductors, with at least six inches of free conductor movement demonstrated to the satisfaction of the Engineer.

12. Ensure all mounting hardware and installation details of services conform to utility company specifications.

13. For all electrical service enclosures listed under Item 628 on the MPL, the UL 508 enclosure manufacturers will prepare and submit a schematic drawing unique to each service. Before shipment to the job site, place the applicable laminated schematic drawings and the laminated plan sheet showing the electrical service data chart used to build the enclosure in the enclosure's data pocket. The installing contractor will copy and laminate the actual project plan sheets detailing all equipment and branch circuits supplied by that service. The laminated plan sheets are to be placed in the service enclosure's document pocket. Reduce 11 in. x 17 in. plan sheets to 8 ½ in. x 11 in. before laminating. If the installation differs from the plan sheets, the installing contractor is to redline plan sheets before laminating.

14. When providing an "Off The Shelf" Type D or Type T service, provide laminated plan sheets detailing equipment and branch circuits supplied by that service. Reduce 11 in. x 17 in. plan sheets to 8 ½ in. x 11 in before laminating. Deliver these drawings before completion of the work to the Engineer, instead of placing in enclosure that has no door pocket.

15. Do not install conduit in the back wall of a service enclosure where it would penetrate the equipment mounting panel inside the enclosure. Provide grounding bushings on all metal conduits, and terminate bonding jumpers to grounding bus. Grounding bushings are not required when the end of the metal conduit is fitted with a conduit sealing hub or threaded boss, such as a meter base hub.

## SERVICE ASSEMBLY ENCLOSURE

1. Provide threaded hub for all conduit entries into the top of enclosure.

2. Type galvanized steel (GS) enclosures may be used for Type C panelboards and for Type D and T services that do not use an enclosure mounted photocell or lighting contactor. Provide GS enclosures in accordance with DMS 11080, 11082, 11083, and 11084.

3. Provide aluminum (AL) and stainless steel (SS) enclosures for Types A, C, and D in accordance with DMS 11080, 11081, 11082, 11083, and 11084. Do not paint stainless steel.

4. Provide pedestal service (PS) enclosures in accordance with ED(9) and DMS 11080 and 11085. Do not provide GS pedestal services. If GS is shown in the PS descriptive code, provide an AL enclosure.

## MAIN DISCONNECT & BRANCH CIRCUIT BREAKERS

1. Field drill flange-mounted remote operator handle if needed, to ensure handle is lockable in both the "On" and "Off" positions.

2. When the utility company provides a transformer larger than 50 KVA, verify that the available fault current is less than the circuit breaker's ampere interrupting capacity (AIC) rating and provide documentation from the electric utility provider to the Engineer.

## PHOTOELECTRIC CONTROL

1. Provide photocell as listed on the MPL. Move, adjust, or shield the photocell from stray or ambient night time light to ensure proper operation. Mount photocell facing north when practical. Mount top of pole photocells as shown on Top Mounted Photocell Detail.

## * ELECTRICAL SERVICE DATA

| Elec. Service ID | Plan Sheet Number | Electrical Service Description | Service Conduit **Size | Service Conductors No./Size | Safety Switch Amps | Main Ckt. Bkr. Pole/Amps | Two-Pole Contractor Amps | Panelbd/ Loadcenter Amp Rating | Branch Circuit ID | Branch Ckt. Bkr. Pole/Amps | Branch Circuit Amps | KVA Load |
|---|---|---|---|---|---|---|---|---|---|---|---|---|
| SB 183 | 289 | ELC SRV TY A 240/480 100(SS)AL(E)SF(U) | 2" | 3/#2 | 100 | 2P/100 | 100 | N/A | Lighting NB | 2P/40 | 26 | 28.1 |
| | | | | | | | | | Lighting SB | 2P/40 | 25 | |
| | | | | | | | | | Underpass | 1P/20 | 15 | |
| | | | | | | | | | | | | |
| NB Access | 30 | ELC SRV TY D 120/240 060(NS)SS(E)TS(O) | 1 ¼" | 3/#6 | N/A | 2P/60 | | 100 | Sig. Controller | 1P/30 | 23 | 5.3 |
| | | | | | | | 30 | | Luminaires | 2P/20 | 9 | |
| | | | | | | | | | CCTV | 1P/20 | 3 | |
| | | | | | | | | | | | | |
| 2nd & Main | 58 | ELC SRV TY T 120/240 000(NS)GS(N)SP(O) | 1 ¼" | 3/#6 | N/A | N/A | N/A | 70 | Flashing Beacon 1 | 1P/20 | 4 | 1.0 |
| | | | | | | | | | Flashing Beacon 2 | 1P/20 | 4 | |

* Example only, not for construction. All new electrical services must have electrical service data chart specific to that service as shown in the plans.

** Verify service conduit size with utility. Size may change due to utility meter requirements. Ensure conduit size meets the National ELectrical Code.

## EXPLANATION OF ELECTRICAL SERVICE DESCRIPTIVE CODE

ELEC SERV TY X XXX/XXX XXX (XX) XX (X) XX (X)

Schematic Type

Service Voltage V / V

Disconnect Amp Rating
000 indicates main lug only/
Typically Type T

(SS)= Safety Switch Ahead of Meter-Check with Utility
(NS)= No safety Switch Ahead of Meter-Check with Utility

Enclosure Type
GS= Galvanized steel("off the shelf")
SS= Stainless steel(Custom Enclosure)See MPL
AL= Aluminum (Custom Enclosure)See MPL

Photocell Mounting Location
(E)= Inside Service/Enclosure Mounted
(T)= Top of pole
(L)= Luminaire mounted
(N)= None/No Photocell or Lighting Contactor Required

Service Support Type
GC= Granite concrete
OC= Other concrete
TP= Timber pole
SP= Steel pole
SF= Steel frame
OT= Pole by others or paid for separately
EX= Existing pole
TS= Service on traffic signal pole
PS= Pedestal Service

O= Overhead Service Feed from Utility
U= Underground Service Feed from Utility

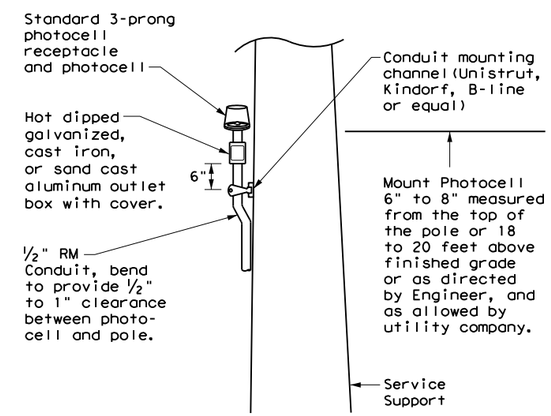


## TOP MOUNTED PHOTOCELL

Install conduit strap maximum 3 feet from box. 5 foot maximum spacing between straps supporting conduit.

Texas Department of Transportation — Traffic Operations Division Standard

# ELECTRICAL DETAILS SERVICE NOTES & DATA

## ED(5)-14

| FILE: ed5-14.dgn | DN: TxDOT | CK: TxDOT | DW: TxDOT | CK: TxDOT |
|---|---|---|---|---|
| © TxDOT October 2014 | CONT | SECT | JOB | HIGHWAY |
| REVISIONS | DIST | | COUNTY | SHEET NO. 120 |

DATE:
FILE:

71E

DISCLAIMER:
The use of this standard is governed by the "Texas Engineering Practice Act". No warranty of any kind is made by TxDOT for any purpose whatsoever. TxDOT assumes no responsibility for the conversion of this standard to other formats or for incorrect results or damages resulting from its use.

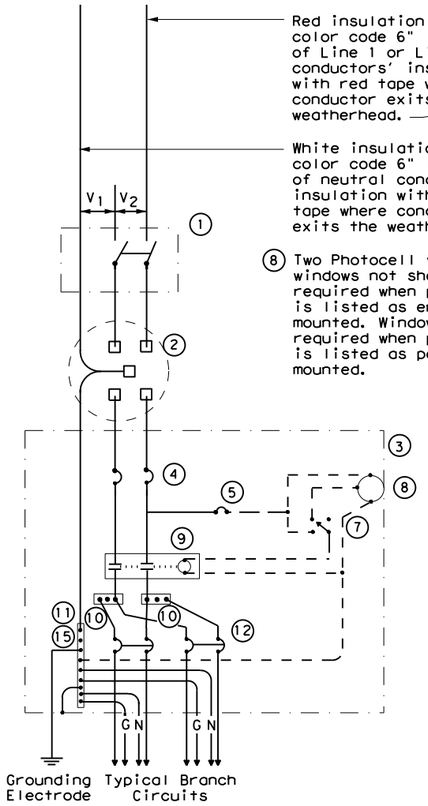


SCHEMATIC TYPE A
THREE WIRE

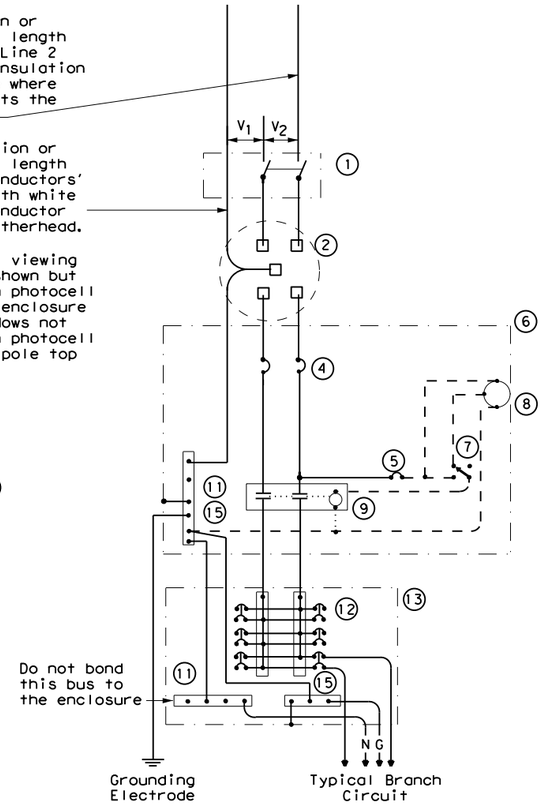


SCHEMATIC TYPE C
THREE WIRE

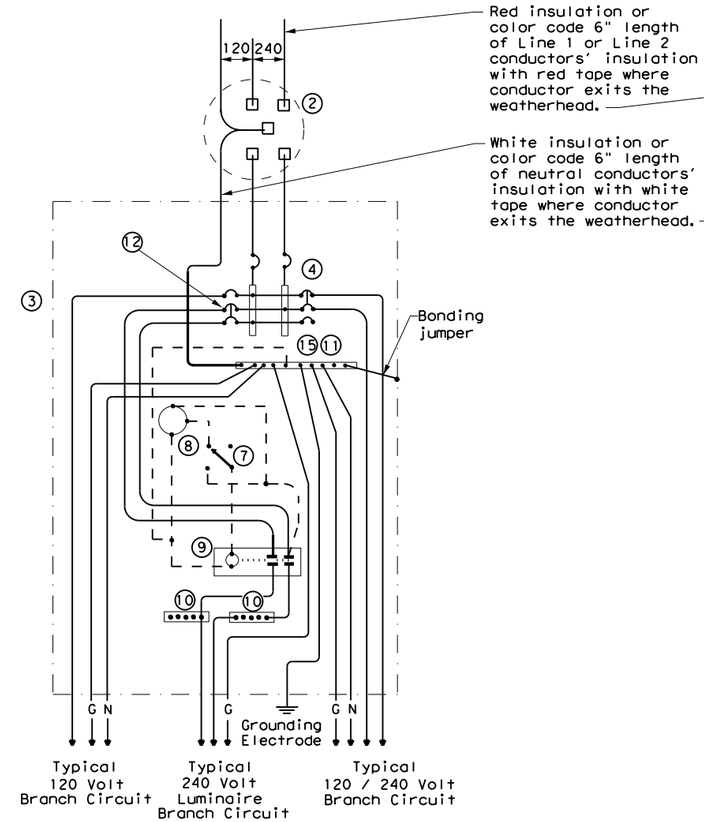


SCHEMATIC TYPE D - CUSTOM
120/240 VOLTS - THREE WIRE

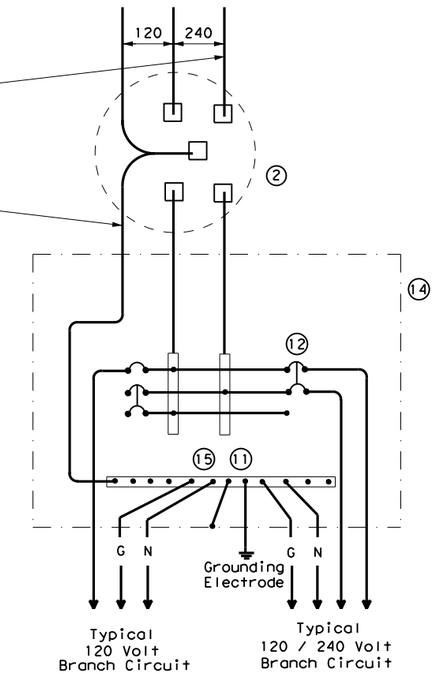


SCHEMATIC TYPE T
120/240 VOLTS - THREE WIRE

Galvanized steel-"Buy Off The Shelf" only. When required install photocell top of the pole or on luminaire only, no lighting contractor will be installed.

## WIRING LEGEND

| | |
|---|---|
| ——— | Power Wiring |
| - - - - | Control Wiring |
| —N— | Neutral Conductor |
| —G— | Equipment grounding conductor-always required |

## SCHEMATIC LEGEND

| | |
|---|---|
| 1 | Safety Switch (when required) |
| 2 | Meter (when required-verify with electric utility provider) |
| 3 | Service Assembly Enclosure |
| 4 | Main Disconnect Breaker (See Electrical Service Data) |
| 5 | Circuit Breaker, 15 Amp (Control Circuit) |
| 6 | Auxiliary Enclosure |
| 7 | Control Station ("H-O-A" Switch) |
| 8 | Photo Electric Control (enclosure-mounted shown) |
| 9 | Lighting Contactor |
| 10 | Power Distribution Terminal Blocks |
| 11 | Neutral Bus |
| 12 | Branch Circuit Breaker (See Electrical Service Data) |
| 13 | Separate Circuit Breaker Panelboard |
| 14 | Load Center |
| 15 | Ground Bus |

Texas Department of Transportation

Traffic Operations Division Standard

# ELECTRICAL DETAILS SERVICE ENCLOSURE AND NOTES

# ED(6)-14

| FILE: ed6-14.dgn | DN: TxDOT | CK: TxDOT | DW: TxDOT | CK: TxDOT |
|---|---|---|---|---|
| © TxDOT October 2014 | CONT | SECT | JOB | HIGHWAY |
| REVISIONS | | | | |
| | DIST | COUNTY | | SHEET NO. |
| | | | | 121 |

DATE:
FILE:

71F

## SUPPORT TYPE STEEL POLE (SP) AND STEEL FRAME (SF)

1. Provide steel pole and steel frame supports as per TxDOT Departmental Material Specification (DMS)11080 "Electrical Services." Mount all equipment and conduit on 12 gauge galvanized steel or stainless steel channel strut, 1 ½ in. or 1 ⅝ in. wide by 1 in. up to 3 ¾ in. deep Unistrut, Kindorf, B-line or equal. Bolt or weld all channel and hardware to vertical members as approved. Do not stack channel. File smooth and paint field cut ends of all channel with zinc-rich paint before installing.

2. Provide poles for overhead service with an eyebolt or similar fitting for attachment of the service drop to the pole in conformance with the electric utility provider's specifications.

3. Provide and install galvanized ¾ in. x 18 in. x 4 in. (dia. x length x hook length) anchor bolts for underground service supports. Provide and install galvanized ¾ in. x 56 in. x 4 in. anchor bolts for overhead service supports. Ensure anchor bolts have 3 in of thread, with 3 ¼ in. to 3 ½ in. of the exposed anchor bolt projecting above finished foundation. Provide and install leveling nuts for all anchor bolts.

4. Bond one of the anchor bolts to the rebar cage with 6 AWG bare stranded copper conductor. Use listed mechanical connectors rated for embedment in concrete. See Inset B.

5. Furnish and install rigid metallic ells in all steel pole and steel frame foundations for all conduits entering the service from underground.

6. Use class C concrete for foundations. Ensure reinforcing steel is Grade 60 with 3" of unobstructed concrete cover.

7. Drill and tap steel poles and frames for ½ in. X 13 UNC tank ground fitting. For steel pole service supports, provide and install tank ground fitting 4 in. to 6 in. below electrical service enclosure. Provide properly sized hole through the bottom of the enclosure for the service grounding electrode conductor. Ensure electrical service grounding electrode conductor is as short and straight as possible from the enclosure to the tank ground fitting. For steel frame service supports, provide and install tank ground fitting on steel frame post. Install service grounding electrode conductor in a non-metallic conduit or tubing from the enclosure to the steel frame post. Connect electrical service grounding electrode conductor to the tank ground fitting. See steel frame and steel pole details and Inset A for more information. Size service entrance conduit and branch circuit conduit as shown in the plans. For underground conduit runs from the electrical service, extend RMC from the service enclosure to an RMC elbow, and then connect the schedule type and size of conduit shown in the plans. Provide and install grounding bushings where RMC terminates in the enclosure. Grounding bushings are not required when RMC is fitted into a sealing hub or threaded boss.

8. If Steel pole or frame is painted, bond each separate painted piece with a bonding jumper attached to a tapped hole.

9. Provide ¼" - 20 machine screws for bonding. Do not use sheet metal screws. Remove all non-conductive material at contact points. Terminate bonding jumpers with listed devices. Install minimum size 6 AWG stranded copper bonding jumpers. Make up all threaded bonding connections wrench tight.

10. Avoid contact of the service drop and service entrance conductors with the metal pole to prevent abrasion of the insulated conductors.

11. Shop drawings are not required for service support structure unless specifically stated elsewhere or directed by the Engineer.

DISCLAIMER:
The use of this standard is governed by the "Texas Engineering Practice Act". No warranty of any kind is made by TxDOT for any purpose whatsoever. TxDOT assumes no responsibility for the conversion of this standard to other formats or for incorrect results or damages resulting from its use.

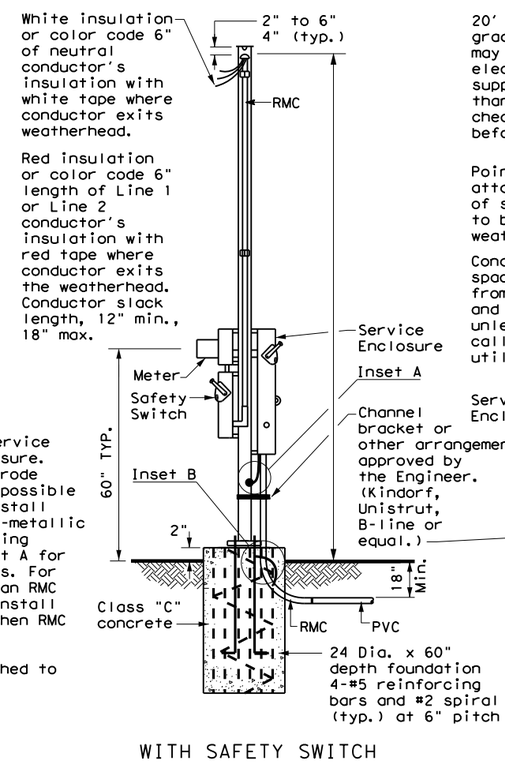


WITH SAFETY SWITCH

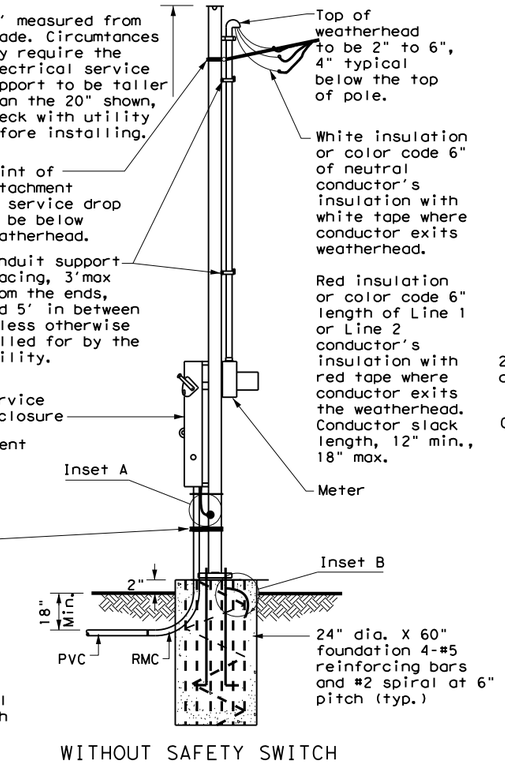


WITHOUT SAFETY SWITCH

### SERVICE SUPPORT TYPE SP (O) - OVERHEAD SERVICE

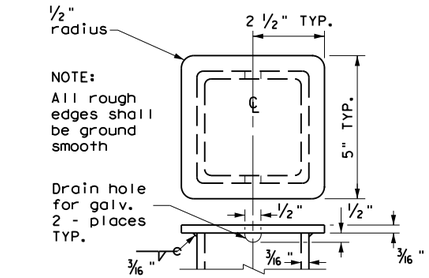


POLE TOP PLATE

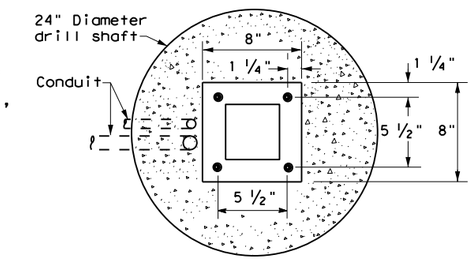


BASE PLATE DETAIL

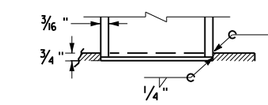


BOTTOM OF POLE

### SERVICE SUPPORT TYPE SF & SP

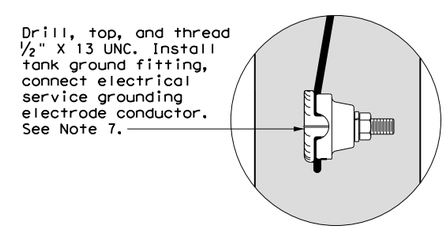


FRONT VIEW

INSET A

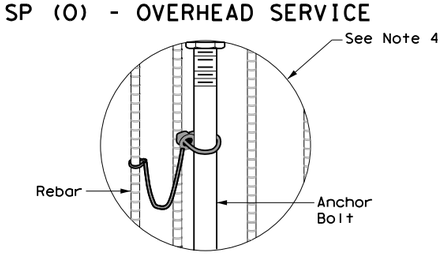


INSET B

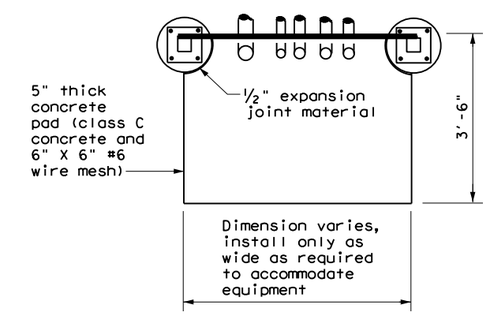


TOP VIEW

### SERVICE SUPPORT TY SF (O) & SF (U)

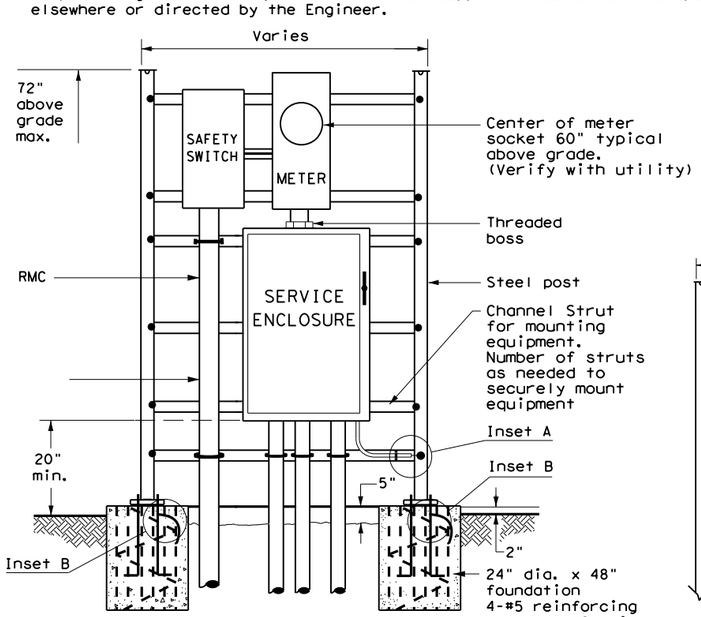


WITH SAFETY SWITCH

FRONT VIEW

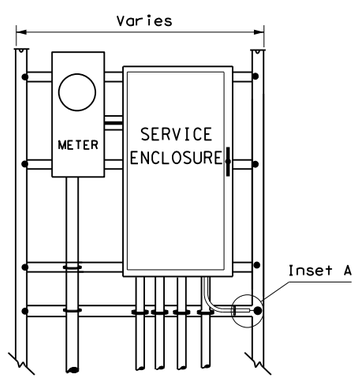


WITHOUT SAFETY SWITCH

### SERVICE SUPPORT TYPE SF(U) - UNDERGROUND SERVICE

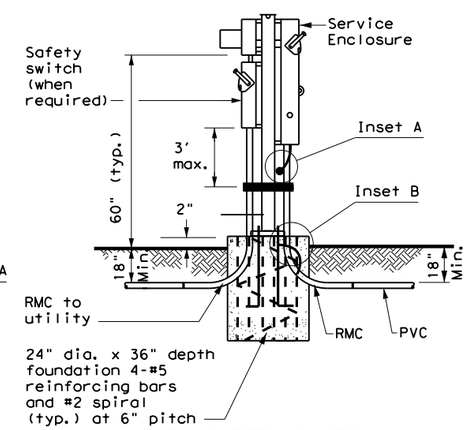


WITH SAFETY SWITCH

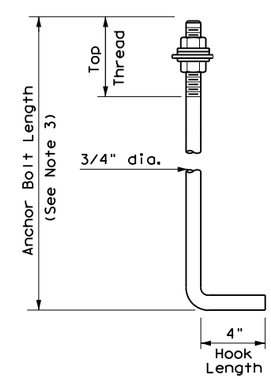


HOOKED ANCHOR DETAIL

### SERVICE SUPPORT TYPE SP(U) - UNDERGROUND SERVICE

Texas Department of Transportation

Traffic Operations Division Standard

# ELECTRICAL DETAILS SERVICE SUPPORT TYPES SF & SP

# ED(7)-14

| FILE: ed7-14.dgn | DN: TxDOT | CK: TxDOT | DW: TxDOT | CK: TxDOT |
|---|---|---|---|---|
| © TxDOT October 2014 | CONT | SECT | JOB | HIGHWAY |
| REVISIONS | | | | |
| | DIST | | COUNTY | SHEET NO. 122 |

DATE:
FILE:

71G

# ROADWAY ILLUMINATION ASSEMBLY NOTES

1. Details apply to roadway lighting installations bid or referenced under Item 610, "Roadway Illumination Assemblies." Provide, furnish, and install all other materials not shown on the plans which may be necessary for complete and proper construction. Where manufacturers provide warranties or guarantees as a customary trade practice, furnish to the State such warranties or guarantees.

2. The locations of poles and fixtures may be shifted by the Engineer to accommodate local conditions. Install or remove poles and luminaires located near overhead electrical lines using established industry and utility safety practices and in accordance with laws governing such work. Consult with the appropriate utility company prior to beginning such work.

3. Provide new and unused materials. Ensure that all materials and installations comply with the applicable articles of the National Electrical Code (NEC),TxDOT standards and specifications, National Electrical Manufacturers Association (NEMA),and are listed by Underwriters Laboratories (UL) or a Nationally Recognized Testing Lab (NRTL). NRTLs such as Canadian Standard Association, Intertek Testing Services NA Inc., or FM Approvals LLC can be considered equivalent to UL. Faulty fabrication or poor workmanship in any material, equipment, or installation is justification for rejection.

4. Provide Roadway Illumination Light Fixtures as per TxDOT Departmental Material Specification (DMS) 11010, Item 610, and as shown on the Material Producers List (MPL) for Roadway Illumination and Electrical Supplies.

5. Fabricate steel roadway illumination poles in accordance with Roadway Illumination Poles (RIP) standards and Item 610. Poles fabricated according to RIP standards do not require shop drawing submittals.

   a. Alternate designs to RIP standards or the use of aluminum to fabricate poles will require the submission of shop drawings electronically. For instructions on submitting shop drawings electronically see "Guide to Electronic Shop Drawing Submittal" on the TxDOT web site.

   b. Limitations on use of the RIP standard: The RIP standard details were developed for installations in locations where the 3-second gust basic maximum wind speed is 110 mph, and where the elevation of the base of the pole is less than (i.e. not more than) 25' above the elevation of the surrounding terrain, in accordance with the "AASHTO Standard Specifications for Structural Supports for Highway Signs, Luminaires and Traffic Signals," 6th Edition (2013) of the AASHTO Design Specifications. For poles to be installed in regions where the maximum basic wind speed exceeds 110 mph or to be mounted more than 25' above the surrounding terrain, provide poles meeting the following requirements:

      i. Submittals. Following the electronic shop drawing submittal process (see Guide to Electronic Shop Drawing Submittal on the TxDOT web site), submit to the Engineer for approval fabrication drawings and calculations for the poles, sealed by a Texas licensed professional engineer (P.E.).

      ii. Luminaire Structural Support Requirements. Provide light poles, arms, and anchor bolt assemblies with a 25 year design life to safely resist dead loads, ice loads and the required basic wind speeds at the location of installation in accordance with the 6th edition (2013) of the AASHTO Design Specifications. For transformer base poles, include transformer base and connecting hardware in calculations and shop drawing submittals. Structurally test all transformer bases to resist the theoretical plastic moment capacity of the pole. Submit certification of the plastic moment load test and FHWA breakaway requirement test of the model of base being furnished with the shop drawings. Show breakaway base model number, manufacturer's name, and logo on shop drawings. Include on manufacturer's shop drawings the ASTM designations for all materials to be used.

6. For both transformer and shoe-base type illumination poles, provide and install double-pole breakaway fuse holders as specified by DMS-11040. Breakaway fuse holders are listed on the MPL for Roadway Illumination and Electrical Supplies under Items 610 & 620. Provide 10 amp time delay fuses for breakaway connectors in light poles, or inside the light fixture for underpass luminaires. In each pole, connect luminaires to the breakaway connector with continuous stranded 12 AWG copper conductors as listed on the MPL. Bond all equipment grounding conductors together and to the ground lug in the transformer base or hand hole.

7. Tighten anchor bolts for shoe base, concrete traffic barrier base, and bridge mount roadway illumination poles, in accordance with Item 449.

8. Install T-Base with following procedure:

   a. Anchor Bolt Tightening.

      i. Coat the threads of the anchor bolts with electrically conductive lubricant.

      ii. Place the T-base over the anchor bolts. Foundation must be level and flat. The maximum permissible gap under any one corner of the t-base is 1/8" before nuts are tightened.

      iii. Coat the bearing surfaces of the nuts and washers with electrically conductive lubricant. Install (1) 1/2" hold down washer, (1) lock washer, and (1) nut on each anchor bolt. Turn the nuts onto the bolts so that each is hand-tight against the washer.

      iv. Using a torque wrench, tighten each nut to 150 ft-lb. Uniform contact is required between the foundation and the T-base in the corner regions of the T-base, and all corner gaps must be closed after applying torque. If a gap still exists after torquing to 150 ft-lbs, continue torquing each bolt incrementally until gap is closed or maximum allowable torque of 250 ft. pound is reached, whichever comes first. If 250 ft-lbs is not enough to close the gap the foundation must be leveled. Gaps along the straight sides of the T-bases and the foundation are permissible. Ensure that no high point of contact occurs between the straight sides of the T-base and the foundation.

      v. Check top of T-base for level. If not level then foundation must be leveled.

   b. Top Bolt Procedure

      i. Erect pole over T-base with crane. Coat bolts, nuts, washers, and lock washers with electrically conductive lubricant.

      ii. Install bolts and 1/2" connecting washers from the inside of the T-base, thread up through the pole base. Install flat washers, lock washers and nuts snug tight according to Item 447, "Structural Bolting."

      iii. Tighten each nut to 150 ft-lb. using a torque wrench.

   c. Level and Plumb

      i. Ensure pole is plumb and mast arm is perpendicular to the roadway according to plans to within 5 degrees.

9. Construct luminaire pole foundations in accordance with Item 416, "Drilled Shaft Foundations," and TxDOT standard sheet RID(2).

10. Provide and install underpass luminaires in accordance with Item 610, DMS-11010, and TxDOT standard sheet RID(3). Typical luminaire size for underpass luminaires is 150W HPS or 150W EQ LED.

11. Mount luminaires on arms level as shown by the luminaire level indicator.

12. Orient luminaires perpendicular to the roadway intended to be lit unless otherwise shown on the plans.

## Wiring Diagram Notes:

① Use 1/2 in.-13 UNC threaded, copper or tin-plated copper, pole bonding connector, sized appropriately for conductors, bonded to T-base, or use ground lug in handhole as available.

② Use pre-qualified two-pole breakaway connectors for all luminaire pole installations. For luminaires fed by a circuit with a neutral conductor, use double pole breakaway connectors with the neutral side unfused and marked white.

③ Split Bolt or other connector.

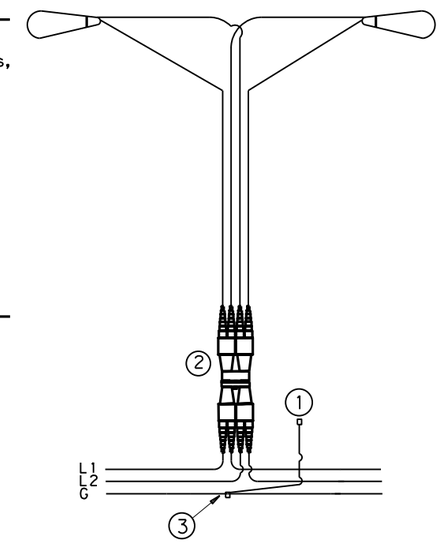


L1,L2 = Hot Conductors
G = Grounding Conductor

**TYPICAL WIRING DIAGRAM**

LUMINAIRES SERVED AT 480V ON 240/480 VOLT SERVICE OR LUMINAIRES SERVED AT 240V FOR 120/240 VOLT SERVICE.

## Decorative LED Lighting Notes:

1. LED Drivers in Remote Outdoor enclosures (for drivers that do not include an enclosure as part of a factory assembly):

   a. Provide NEMA 3R outdoor enclosure or as approved.

   b. Install enclosure at least 12" above ground or other horizontal surface. Mount vertically or on ceiling, and avoid direct sun where possible.

   c. Install drivers with at least 2 inches of space from enclosure walls.

   d. For multiple drivers in an enclosure, provide at least 4 inches side to side and 1 inch end to end from other drivers or electronic equipment

   e. For drivers mounted on back wall of enclosure, mount enclosure on 1 5/8" strut or other standoff to dissipate heat, or mount driver to side of the enclosure or to the metal cover.

   f. Provide remote drivers with a maximum of 100 watts

   g. Provide drivers with documentation of 100,000 hr lifetime at Tcase of 65C or higher.

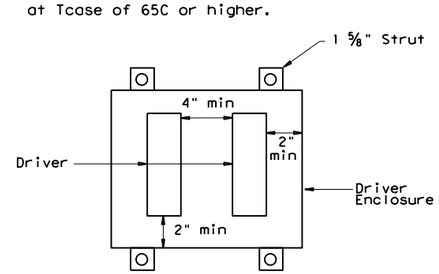


Driver Spacing In Remote Enclosure

Texas Department of Transportation — Traffic Safety Division Standard

**ROADWAY ILLUMINATION DETAILS**

**RID(1)-20**

| FILE: rid1-20.dgn | DN: | CK: | DW: | CK: |
|---|---|---|---|---|
| ©TxDOT January 2007 | CONT | SECT | JOB | HIGHWAY |
| REVISIONS 7-17 12-20 | DIST | | COUNTY | SHEET NO. 123 |

72A

DISCLAIMER:
The use of this standard is governed by the "Texas Engineering Practice Act". No warranty of any kind is made by TxDOT for any purpose whatsoever. TxDOT assumes no responsibility for the conversion of this standard to other formats or for incorrect results or damages resulting from its use.

DATE:
FILE:

DISCLAIMER:
The use of this standard is governed by the "Texas Engineering Practice Act". No warranty of any kind is made by TxDOT for any purpose whatsoever. TxDOT assumes no responsibility for the conversion of this standard to other formats or for incorrect results or damages resulting from its use.

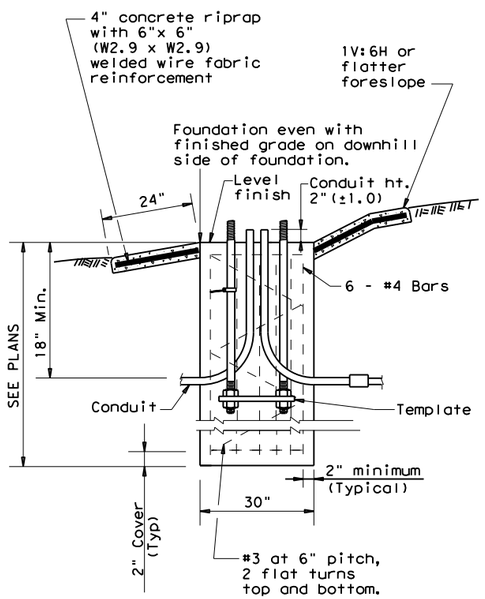


## SECTION A-A

SHOWING SLOPED GRADE

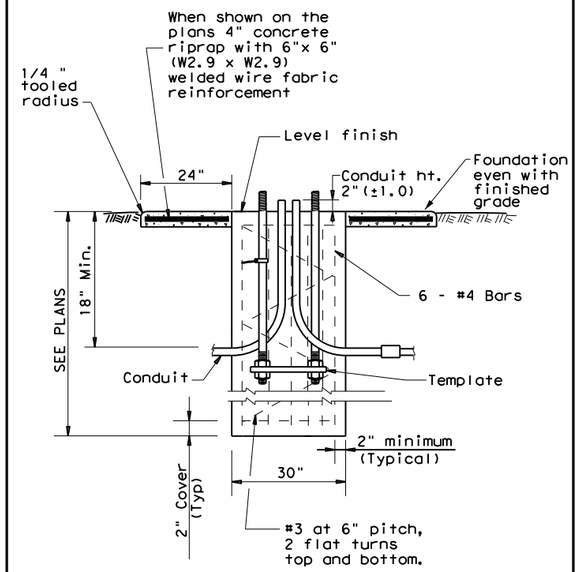


## SECTION A-A

SHOWING CONSTANT GRADE

## TABLE 1

**ANCHOR BOLTS**

| POLE MOUNTING HEIGHT | BOLT CIRCLE | | ANCHOR BOLT SIZE |
|---|---|---|---|
| | Shoe Base | T-Base | |
| <40 ft. | 13 in. | 14 in. | 1in.x 30in. |
| 40-50 ft. | 15 in. | 17 1/4in. | 1 1/4in. x 30in. |

## TABLE 2

RECOMMENDED FOUNDATION LENGTHS
(See note 1)

| MOUNTING HEIGHT | TEXAS CONE PENETROMETER N Blows/ft | | |
|---|---|---|---|
| | 10 | 15 | 40 |
| ≤20 ft. | 6′ | 6′ | 6′ |
| >20 ft. to 30 ft. | 8′ | 6′ | 6′ |
| >30 ft. to 40 ft. | 8′ | 8′ | 6′ |
| >40 ft. to 50 ft. | 10′ | 8′ | 6′ |

## TABLE 3

**PAY QUANTITY OF RIPRAP PER FOUNDATION (Install only when shown on the plans)**

| Foundation Diameter | RIPRAP DIAMETER | RIPRAP (CONC) (CL B) |
|---|---|---|
| 30 in. | 78 in. | 0.35 CY |

## GENERAL NOTES:

1. "Recommended Foundation Lengths" table is for information purposes only. Foundation lengths shall be as shown on the plans, or as directed by the Engineer. Foundations will be paid for under Item 416, "Drilled Shaft Foundations," unless otherwise shown on the plans.
2. Erect roadway illumination assembly poles plumb and true. Form and level the top 6" of the foundation so the pole will be plumb. Use leveling nuts to plumb shoe base poles. Do not use shims or leveling nuts under transformer bases. Do not grout between baseplate and the foundation.
3. Ensure Class 2A and 2B fit for anchor bolts and nuts. Tap and chase nuts after galvanizing. Anchor bolt body with rolled threads need not be full size.
4. Use appropriate class of concrete as specified in Items 416 and 432. Concrete for riprap may be upgraded to Class C at no extra cost to the Department.
5. Place riprap around the foundation when called for elsewhere in the plans. Riprap will be paid for under Item 432.
6. Locate breakaway roadway illumination assemblies as shown in the placement table, unless otherwise dimensioned on the plans. Protect non-breakaway illumination assemblies from vehicular impact (i.e. 2.5 ft. behind guard rail or mounted on traffic barrier), or located outside the clear zone, except that 2.5 ft. from curb face is minimum desired for light poles on city streets, 45 mph or less. See Roadway Design Manual for further information.
7. Use 4 hold down and 4 connecting washers on transformer base poles as recommended by the manufacturer and supplied with base.
8. Install a minimum of 2 conduits in each foundation. See lighting layout sheets for locations of foundations with more than 2 conduits. Cap unused conduits in foundations on both ends.
9. Conduit location in foundations is critical for breakaway devices. Place conduits 2 in. apart on centerline as shown.
10. Bond anchor bolt to rebar cage with #6 bare stranded copper conductor. Use listed mechanical connectors rated for embedment in concrete. The bonded steel in the foundation creates a concrete encased grounding electrode which replaces the ground rod.
11. Grade earthwork around T-base foundations even with the finished grade as shown in Section A-A to ensure proper function of the breakaway device. Use riprap on T-base foundations that are located on sloped grades, and as shown on the plans for level grades.

## TABLE 4

**BREAKAWAY POLE PLACEMENT (See note 6)**

| ROADWAY FUNCTIONAL CLASSIFICATION | ** POLE OFFSET (DISTANCE TO FACE OF TRANSFORMER BASE) |
|---|---|
| Freeway Mainlanes (roadway with full control of access) | 15 ft. (minimum and typical) from lane edge |
| All curbed, 45 mph or less design speed | 2.5 ft. minimum (15 ft. desirable) from curb face |
| All others | 10 ft. minimum*(15 ft. desirable) from lane edge |

* or as close to ROW line as is practical

** provide 2/5 of the luminaire mounting height behind the pole for "falling area" to prevent encroachment on the other travel lanes. See design guidelines.

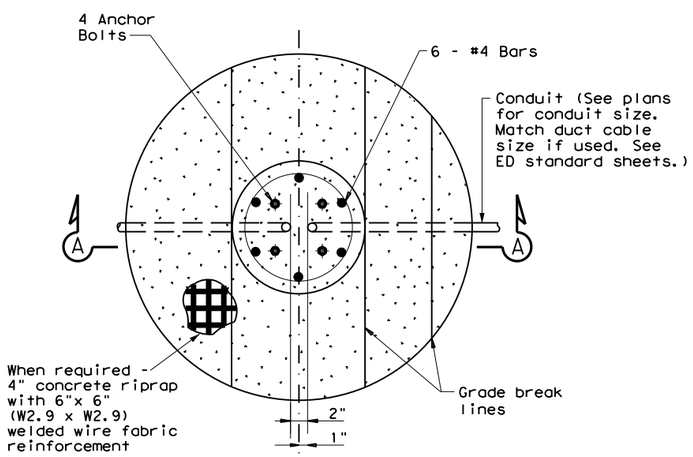


## FOUNDATION DETAIL

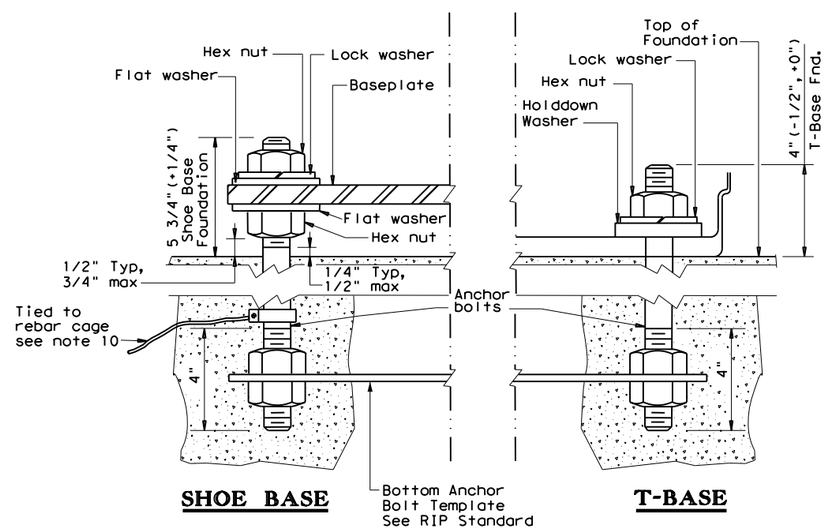


SHOE BASE

T-BASE

## ANCHOR BOLT DETAIL

Texas Department of Transportation

Traffic Safety Division Standard

# ROADWAY ILLUMINATION DETAILS
## (RDWY ILLUM FOUNDATIONS)

## RID(2)-20

| FILE: rid2-20.dgn | DN: | CK: | DW: | CK: |
|---|---|---|---|---|
| ©TxDOT January 2007 | CONT | SECT | JOB | HIGHWAY |
| REVISIONS 1-11 7-17 12-20 | DIST | COUNTY | | SHEET NO. 124 |

72B

DATE:
FILE:

DISCLAIMER:
The use of this standard is governed by the "Texas Engineering Practice Act". No warranty of any kind is made by TxDOT for any purpose whatsoever. TxDOT assumes no responsibility for the conversion of this standard to other formats or for incorrect results or damages resulting from its use.

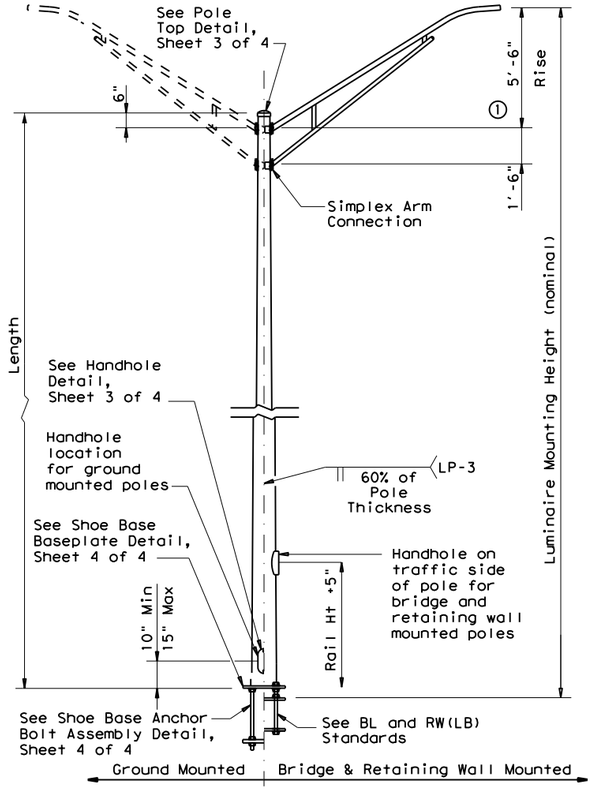


## SHOE BASE POLE

| SHOE BASE POLE | | | | | |
|---|---|---|---|---|---|
| Luminaire Mounting Height (Nominal) (ft) | Base Diameter (in) | Top Diameter (in) | Length (ft) | Pole Thickness (in) | Design Moment (K-ft) |
| 20.00 | 7.00 | 4.90 | 15.00 | 0.1196 | 7.1 |
| 30.00 | 7.50 | 4.00 | 25.00 | 0.1196 | 13.2 |
| 31.00-39.00 | 8.00 | 4.36-3.24 | 26.00-34.00 | 0.1196 | 20.7 |
| 40.00 | 8.50 | 3.60 | 35.00 | 0.1196 | 20.7 |
| 50.00 | 10.50 | 4.20 | 45.00 | 0.1196 | 30.3 |

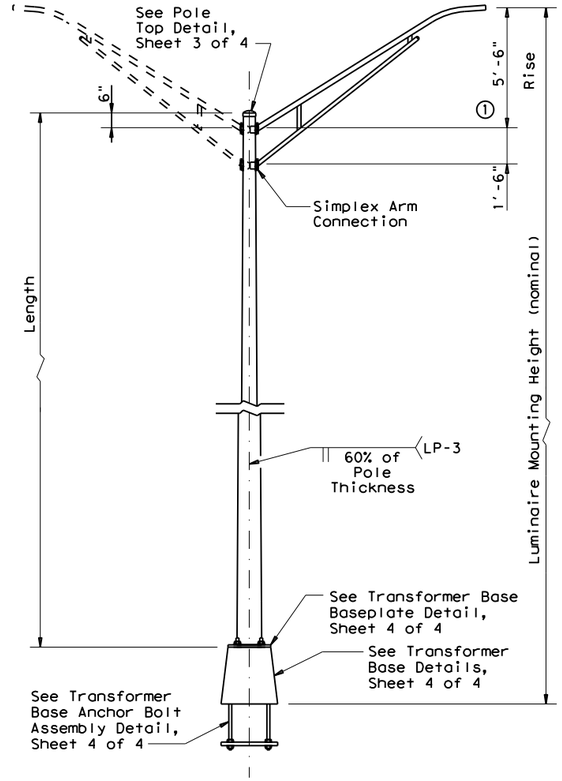


## TRANSFORMER BASE POLE

| TRANSFORMER BASE POLE | | | | | |
|---|---|---|---|---|---|
| Luminaire Mounting Height (Nominal) (ft) | Base Diameter (in) | Top Diameter (in) | Length (ft) | Pole Thickness (in) | Design Moment (K-ft) |
| 20.00 | 7.00 | 5.11 | 13.50 | 0.1196 | 7.1 |
| 30.00 | 7.50 | 4.21 | 23.50 | 0.1196 | 13.2 |
| 31.00-39.00 | 8.00 | 4.57-3.45 | 24.50-32.50 | 0.1196 | 20.7 |
| 40.00 | 8.50 | 3.81 | 33.50 | 0.1196 | 20.7 |
| 50.00 | 10.00 | 3.91 | 43.50 | 0.1196 | 30.3 |

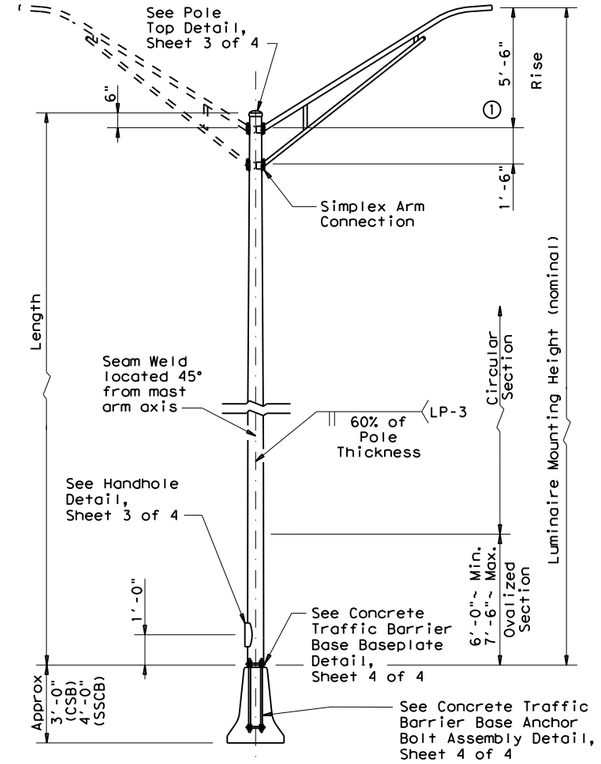


## CONCRETE TRAFFIC BARRIER BASE POLE

| CONCRETE TRAFFIC BARRIER BASE POLE (CSB/SSCB) | | | | | | |
|---|---|---|---|---|---|---|
| Luminaire Mounting Height (Nominal) (ft) | Base② Diameter (in) | Top Diameter (in) | Length (ft) | Pole Thickness (in) | Design Moment (K-ft) | |
| | | | | | About ℄ of Rail | Perp. to Rail |
| 28.00 | 9.00 | 5.78 | 23.00 | 0.1196 | 10.3 | 13.2 |
| 38.00 | 9.00 | 4.38 | 33.00 | 0.1196 | 16.6 | 20.8 |
| 48.00 | 10.50 | 4.48 | 43.00 | 0.1345 | 25.1 | 30.5 |

## MATERIAL DATA

| COMPONENT | ASTM DESIGNATION | MIN. YIELD (ksi) |
|---|---|---|
| Pole Shaft (0.14"/ft. Taper) | A572 Gr 50, A595 Gr A, A1011 HSLAS Gr 50 Cl 2 ③, or A1008 HSLAS Gr 50 Cl 2 | 50 |
| Base Plate and Handhole Frame | A572 Gr.50, or A36 | 36 |
| T-Base Connecting Bolts | F3125 Gr A325 | 92 |
| Anchor Bolts | F1554 Gr 55, A193-B7 or A321 | 55 105 |
| Anchor Bolt Templates | A36 | 36 |
| Heavy Hex (H.H.) Nuts | A194 Gr 2H, or A563 Gr DH | |
| Flat Washers | F436 | |

## NOTES:

① 2'-6" rise for 4 ft. luminaire arms.

② Before ovalized as shown on Concrete Traffic Barrier Base Baseplate details, Sheet 4 of 4.

③ A1011 SS Gr 50 may be used instead of HSLAS, provided the material meets the elongation requirements for HSLAS.

## POLE ASSEMBLY FABRICATION TOLERANCES TABLE

| DIMENSION | TOLERANCE |
|---|---|
| Shaft length | +1" |
| I.D. of outside piece of slip fitting pieces | +1/8", -1/16" |
| O.D. of inside piece of slip fitting pieces | +1/32", -1/8" |
| Shaft diameter: other | +3/16" |
| Out of "round" | 1/4" |
| Straightness of shaft | ±1/4" in 10 ft |
| Twist in multi-sided shaft | 4° in 50 ft |
| Perpendicular to baseplate | 1/8" in 24" |
| Pole centered on baseplate | ±1/4" |
| Location of Attachments | ±1/4" |
| Bolt hole spacing | ±1/16" |

## GENERAL NOTES:

1. Designs conform to AASHTO Standard Specifications for Structural Supports for Highway Signs, Luminaires, and Traffic Signals , 6th Edition (2013) and Interim Revisions thereto. Design 3-Second Gust Wind Speed equals 110 mph with a 1.14 gust factor. A wind importance factor of 0.80 is applied to adjust the wind speed to a 25 year recurrence interval. Design moments listed in tables assume base of pole is 25' above natural ground level.

2. Structures are designed to support two 12' luminaire mast arms and luminaires. Mast arms are designed to support a 60-pound luminaire having an effective projected area of 1.6 square feet.

3. Fabrication shall be in accordance with the Specifications and with the details, dimensions, and weld procedures shown herein. Do not submit shop drawings for roadway illumination pole assemblies fabricated in accordance with the details, dimensions, and weld procedures shown herein. Weld references call for preapproved weld procedures which the Fabricator must obtain prior to fabrication. Materials, fabrication tolerances, and shipping practices shall meet the requirements of these sheets and the Specifications. In the absence of specified fabrication tolerances, dimensions shall be within the tolerances generally obtainable in normal fabrication practice.

4. For mounting heights between values shown in the tables, use base diameter and thickness values for the larger height.

5. Unless otherwise noted, all steel parts shall be galvanized in accordance with Item 445, "Galvanizing."

6. Steel poles shall be fabricated in accordance with Item 441, "Steel Structures." Longitudinal seam welds for pole sections shall have 60% minimum penetration. All welding shall be in accordance with AWS D1.1, Structural Welding Code-Steel.

7. Two-section poles joined by circumferential welds will not be permitted, unless otherwise shown on the plans. Poles may be fabricated in two sections and field-assembled by the lap-joint method. The two sections shall telescope together with a lap length of not less than 1-1/2 times the shaft diameter at the lap joint.

8. Alternate material equal to or better than material specified may be substituted with the approval of the Engineer.

9. Lubricate and tighten anchor bolts, when erecting shoe base poles and concrete traffic barrier base poles, in accordance with Item 449, "Anchor Bolts."

10. All poles, except Transformer Base Poles, shall have hand holes with reinforcing frames and covers. For ground mounted shoe base poles, hand holes shall be placed 90 degrees to mast arm unless otherwise noted on the plans. For poles mounted on a concrete traffic barrier with one luminaire arm, hand holes shall be located 180 degrees from luminaire arm. For poles mounted on a concrete traffic barrier with two luminaire arms, all hand holes shall be on the same side of the barrier. For poles mounted on a bridge lighting bracket or a retaining wall lighting bracket, hand hole shall be on traffic side of the pole, at a height that will clear the barrier.

11. The finished pole shall have a smooth, uniform finish free of pits, blisters, or other defects. Scratched, chipped, and other damaged galvanized areas on poles and mast arms shall be repaired in accordance with Item 445, "Galvanizing."

12. Pole length is based on a 5'-6" luminaire arm rise. 4 ft. luminaire arms have a 2'-6" rise. A pole with 4 ft. luminaire arms will have an actual mounting height 3'-0" less than the nominal mounting height. Increasing the pole length to meet the nominal mounting height is allowed, but unnecessary unless otherwise directed by the engineer.

13. Erect transformer base poles in accordance with sheet RID(1).

SHEET 2 OF 4

Texas Department of Transportation — Traffic Safety Division Standard

# ROADWAY ILLUMINATION POLES

# RIP(2)-19

| FILE: rip-19.dgn | DN: | CK: | DW: | CK: |
|---|---|---|---|---|
| ©TxDOT January 2007 | CONT | SECT | JOB | HIGHWAY |
| REVISIONS 7-17 12-19 | DIST | | COUNTY | SHEET NO. 125 |

DATE:
FILE:

73B

DISCLAIMER:
The use of this standard is governed by the "Texas Engineering Practice Act". No warranty of any kind is made by TxDOT for any purpose whatsoever. TxDOT assumes no responsibility for the conversion of this standard to other formats or for incorrect results or damages resulting from its use.

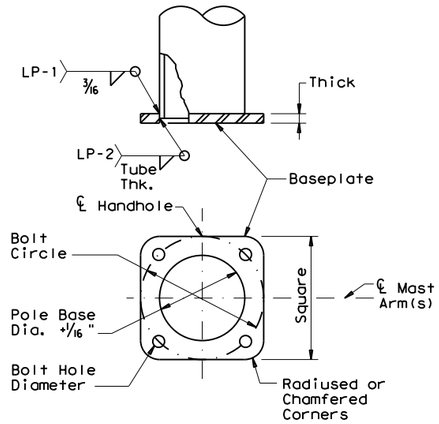


## SHOE BASE BASEPLATE

| SHOE BASE BASEPLATE TABLE | | | | |
|---|---|---|---|---|
| MOUNTING HEIGHTS (nominal) | BOLT CIRCLE | SQUARE | THICK | BOLT HOLE DIAMETER |
| 20′ - 39′ | 13" | 13" | 1 1/4" | 1 1/4" |
| 40′ | 15" | 15" | 1 1/4" | 1 1/2" |
| 50′ | 15" | 15" | 1 1/2" | 1 1/2" |

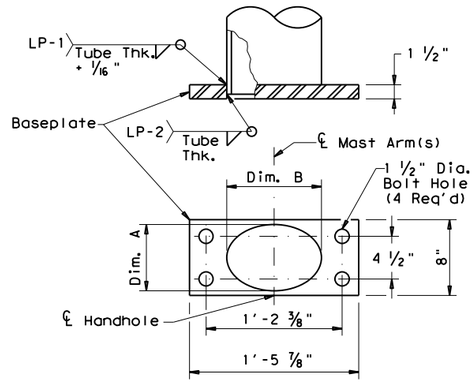


## CONCRETE TRAFFIC BARRIER BASE BASEPLATE

| CONCRETE TRAFFIC BARRIER BASE BASEPLATE TABLE | | | |
|---|---|---|---|
| MOUNTING HEIGHTS (nominal) | POLE DIA.(12) | DIM. A | DIM. B |
| 28′ - 38′ | 9" | 7"± 1/4" | 10"± 1/4" |
| 48′ | 10 1/2" | 7"± 1/4" | 13"± 1/4" |

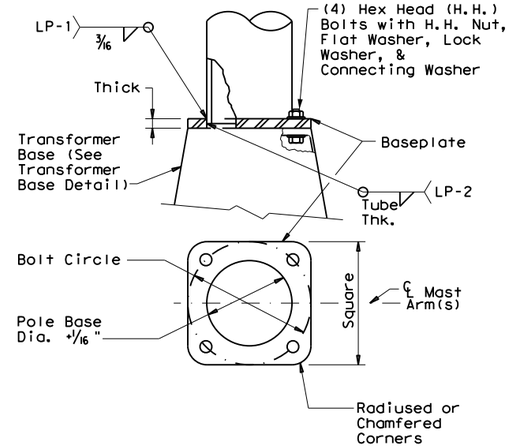


## TRANSFORMER BASE BASEPLATE

| TRANSFORMER BASE BASEPLATE TABLE | | | | | | | |
|---|---|---|---|---|---|---|---|
| MOUNTING HEIGHTS (nominal) | BOLT CIRCLE | SQUARE | THICK | CONNECTING BOLT DIA. | BOLT HOLE DIAMETER | TRANSFOMER BASE TYPE |
| 20′ - 39′ | 13" | 13" | 1 1/4" | 1" | 1 1/4" | A |
| 40′ | 15" | 15" | 1 1/4" | 1 1/4" | 1 1/2" | B |
| 50′ | 15" | 15" | 1 1/2" | 1 1/4" | 1 1/2" | B |

| TRANSFORMER BASE TABLE | | |
|---|---|---|
| TYPE | TOP B.C. | BTM. B.C. |
| A | 13" | 14" |
| B | 15" | 17 1/4" |

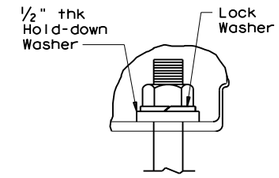


## DETAIL A

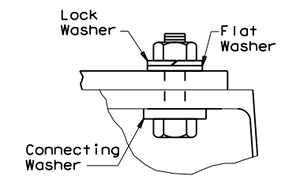


## DETAIL B

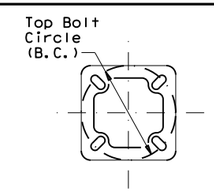


## TOP PLAN

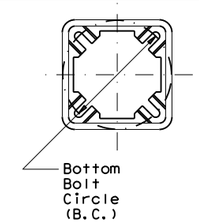


## BOTTOM PLAN

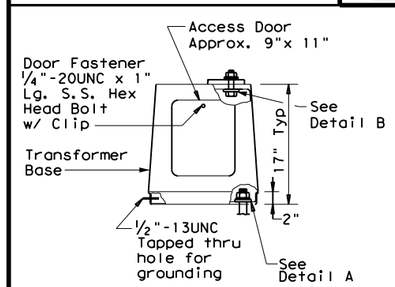


## ELEVATION

## TRANSFORMER BASE DETAILS

## GENERAL NOTES:

1. For mounting heights between those shown in the table, use the values in the table for the larger mounting height.
2. All breakaway bases shall meet the breakaway requirements of the AASHTO Standard Specifications for Structural Supports for Highway Signs, Luminaires and Traffic Signals, 6th Edition (2013) and Interim Revisions thereto, and shall have been tested by FHWA-approved methods. All bases shall have been structurally tested to resist 150% of the design moment.
3. Transformer bases shall be cast from aluminum, ASTM B108 or B26 Alloy 356.0-T6, or other material approved by the Engineer. Four Hex Head (H.H.) bolts with four H.H. nuts, four lock washers, four flat washers, and connecting and hold-down washers as recommended by the manufacturer, galvanized to ASTM A153 Class C or D, or B695 Class 50, shall be provided with each transformer base for connecting the pole. Bolts shall be ASTM A325 or approved equal. Nuts shall be ASTM A563 grade DH galvanized.
4. Bases shall be stamped, incised or by other approved permanent means, marked to show fabricator's name or logo, and model number. Such information shall be placed in a readily seen location, inside or outside the base, but shall not be placed on the door.
5. Doors for transformer bases shall be made of plastic, fiberglass or other non-metallic material approved by the Engineer and shall be attached with stainless steel screws or bolts. Transformer bases shall be cleaned by grit blast cleaning after heat treatment. Certification by the manufacturer of heat treatment shall be furnished with transformer bases. The certification shall show the metal alloy and temper and that the base meets those requirements, chemical and physical. The certification shall also show the material ASTM specification. Transformer bases shall be cast with a removable tab bar for material testing. Some bars may have been removed by the manufacturer for testing.

## NOTES:

(11) Anchor Bolt Templates do not need to be galvanized.

(12) Pole diameter before ovalized.

| ANCHOR BOLT FABRICATION TOLERANCES TABLE | |
|---|---|
| DIMENSION | TOLERANCE |
| Length | ± 1/2" |
| Threaded length | ± 1/2" |
| Galvanized length (if required) | - 1/4" |

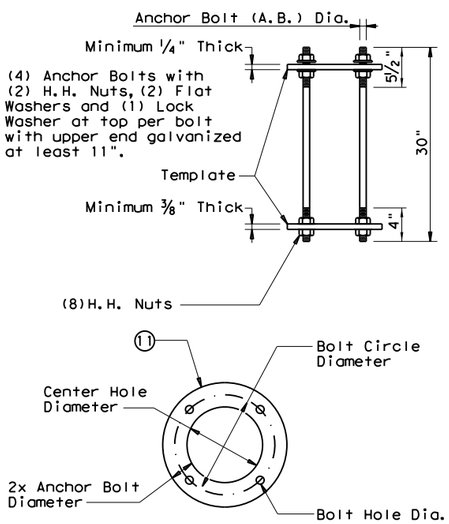


## SHOE BASE ANCHOR BOLT ASSEMBLY

| SHOE BASE ANCHOR BOLT ASSEMBLY TABLE | | | | |
|---|---|---|---|---|
| MOUNTING HEIGHTS (nominal) | A.B. Dia. | BOLT CIRCLE DIAMETER | CTR. HOLE DIAMETER | BOLT HOLE DIAMETER |
| 20′-39′ | 1" | 13" | 11" | 1 1/16" |
| 40′-50′ | 1 1/4" | 15" | 12 1/2" | 1 5/16" |

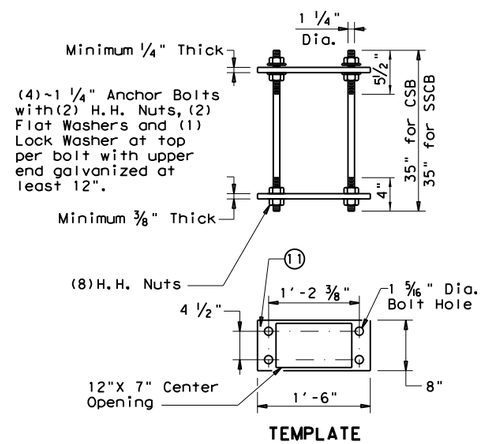


TEMPLATE

## CONCRETE TRAFFIC BARRIER BASE ANCHOR BOLT ASSEMBLY

| TRANSFORMER BASE ANCHOR BOLT ASSEMBLY TABLE | | | | |
|---|---|---|---|---|
| MOUNTING HEIGHTS (nominal) | A.B. Dia. | BOLT CIRCLE DIAMETER | CTR. HOLE DIAMETER | BOLT HOLE DIAMETER |
| 20′ - 39′ | 1" | 14" | 12" | 1 1/16" |
| 40′ - 50′ | 1 1/4" | 17 1/4" | 14 3/4" | 1 5/16" |

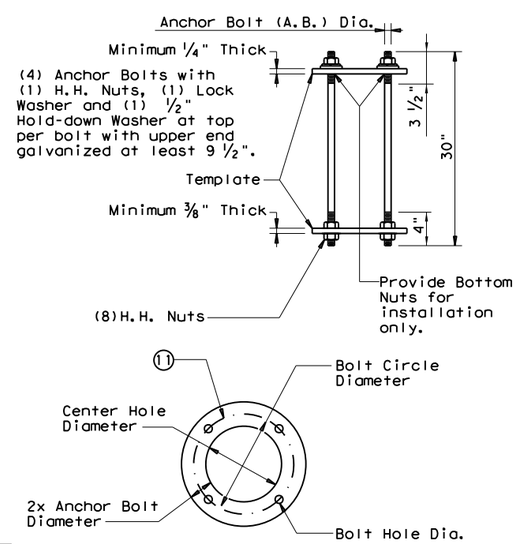


## TRANSFORMER BASE ANCHOR BOLT ASSEMBLY

SHEET 4 OF 4

Texas Department of Transportation — Traffic Safety Division Standard

# ROADWAY ILLUMINATION POLES

# RIP(4)-19

| FILE: rip-19.dgn | DN: | CK: | DW: | CK: |
|---|---|---|---|---|
| ©TxDOT January 2007 | CONT | SECT | JOB | HIGHWAY |
| REVISIONS 7-17 12-19 | DIST | COUNTY | | SHEET NO. 126 |

730

DATE:
FILE:

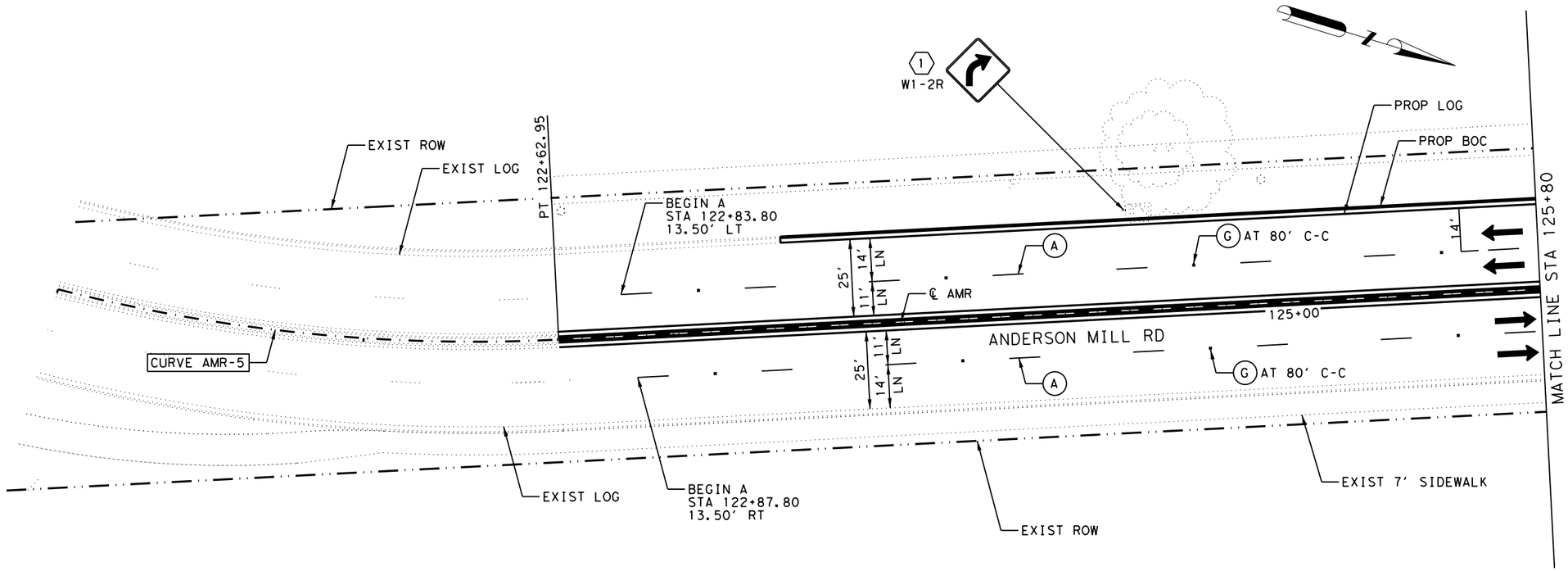


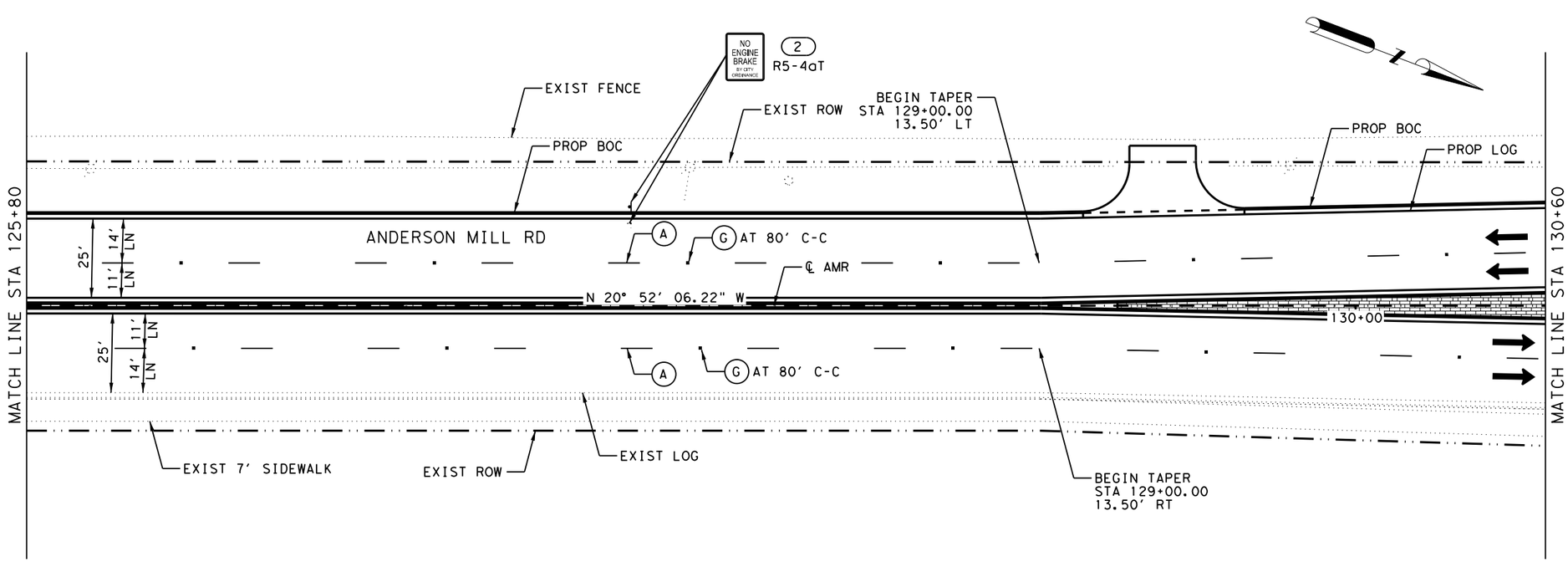


## SIGNING LEGEND

- (X) EXIST SIGN TO REMAIN
- (X) EXIST SIGN TO BE RELOCATED
- (X) EXIST SIGN TO BE REMOVED
- [X] PROPOSED SIGN

## PAVEMENT MARKING LEGEND

- (A) PAV MARK TY I (W) 4"(BRK)
- (B) PAV MARK TY I (W) 8"(SLD)
- (C) PAV MARK TY I (W) 8"(DASH)
- (D) PAV MARK TY I (W) (ARROW)
- (E) PAV MARK TY I (W) (WORD)
- (F) REFL PAV MRKR TY I-C
- (G) REFL PAV MRKR TY II-C-R

| NO | DATE | ISSUES AND REVISIONS |
|---|---|---|

STATE OF TEXAS
AUSTIN S. HELTON
124922
LICENSED
PROFESSIONAL ENGINEER
8/5/2022

Kimley»Horn
F-928
10814 JOLLYVILLE ROAD
BLDG. 4, STE 300
AUSTIN, TX 78759
PHONE: 512-418-1771

# SIGNING AND PAVEMENT MARKING

SHEET 1 OF 5

ANDERSON MILL ROAD PHASE 2

CEDAR PARK



FILENAME: AMR*SPMD*01.dgn
PLOTTED: 8/5/2022 3:58:54 PM

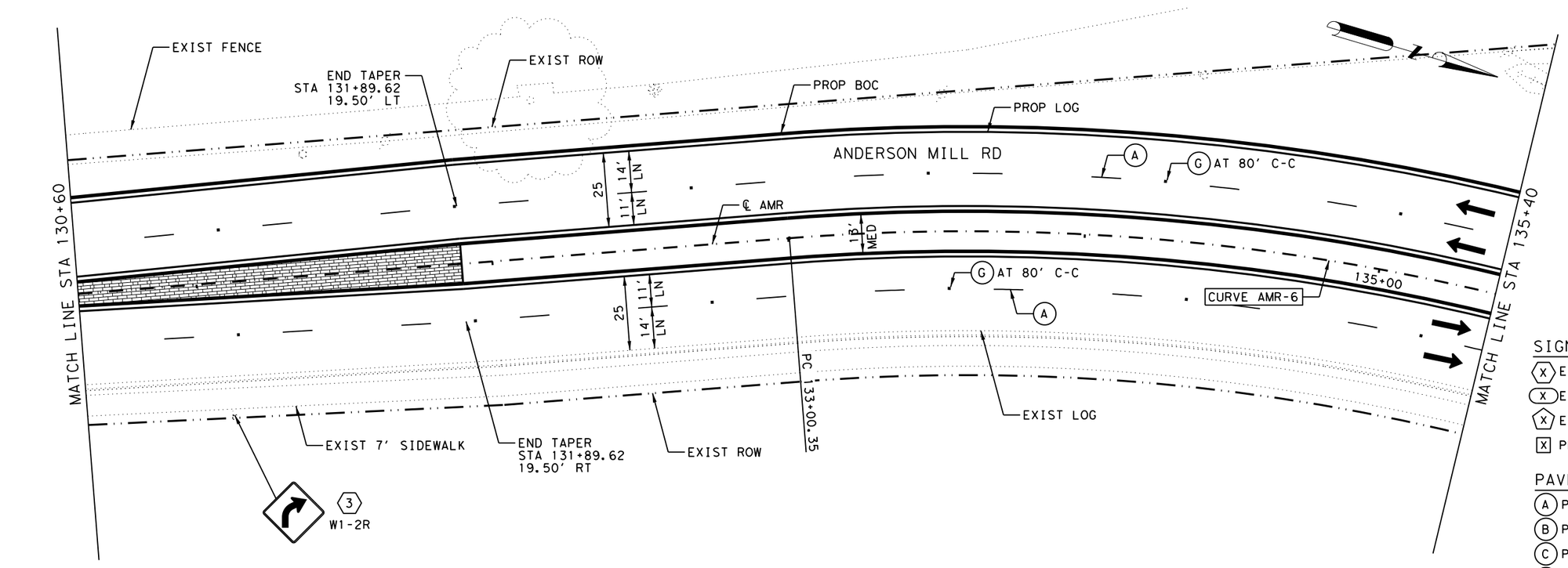


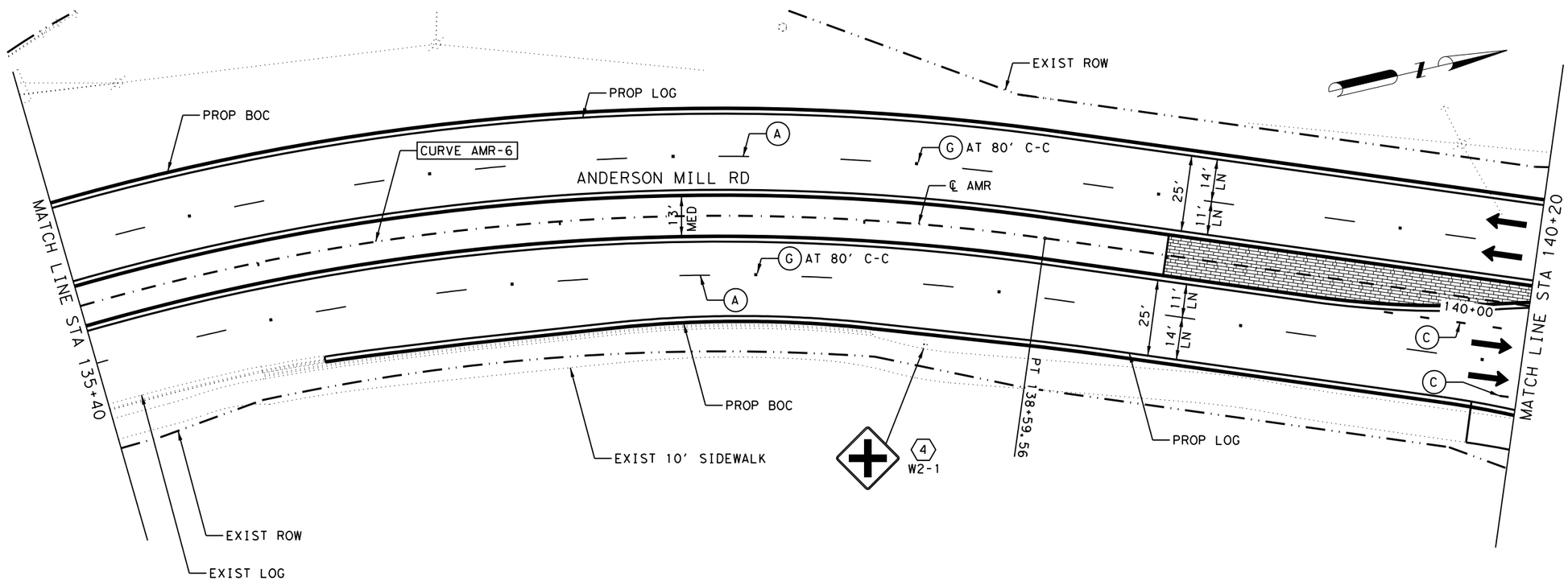


## SIGNING LEGEND

- (X) EXIST SIGN TO REMAIN
- (X) EXIST SIGN TO BE RELOCATED
- (X) EXIST SIGN TO BE REMOVED
- [X] PROPOSED SIGN

## PAVEMENT MARKING LEGEND

- (A) PAV MARK TY I (W) 4"(BRK)
- (B) PAV MARK TY I (W) 8"(SLD)
- (C) PAV MARK TY I (W) 8"(DASH)
- (D) PAV MARK TY I (W) (ARROW)
- (E) PAV MARK TY I (W) (WORD)
- (F) REFL PAV MRKR TY I-C
- (G) REFL PAV MRKR TY II-C-R

| NO | DATE | ISSUES AND REVISIONS |
|---|---|---|
| | | |

STATE OF TEXAS
AUSTIN S. HELTON
124922
LICENSED
PROFESSIONAL ENGINEER
8/5/2022

Kimley»Horn F-928
10814 JOLLYVILLE ROAD
BLDG. 4, STE 300
AUSTIN, TX 78759
PHONE: 512-418-1771

# SIGNING AND PAVEMENT MARKING

SHEET 2 OF 5

ANDERSON MILL ROAD PHASE 2

CEDAR PARK



FILENAME: AMR+SPMD+02.dgn
PLOTTED: 8/5/2022 3:59:08 PM

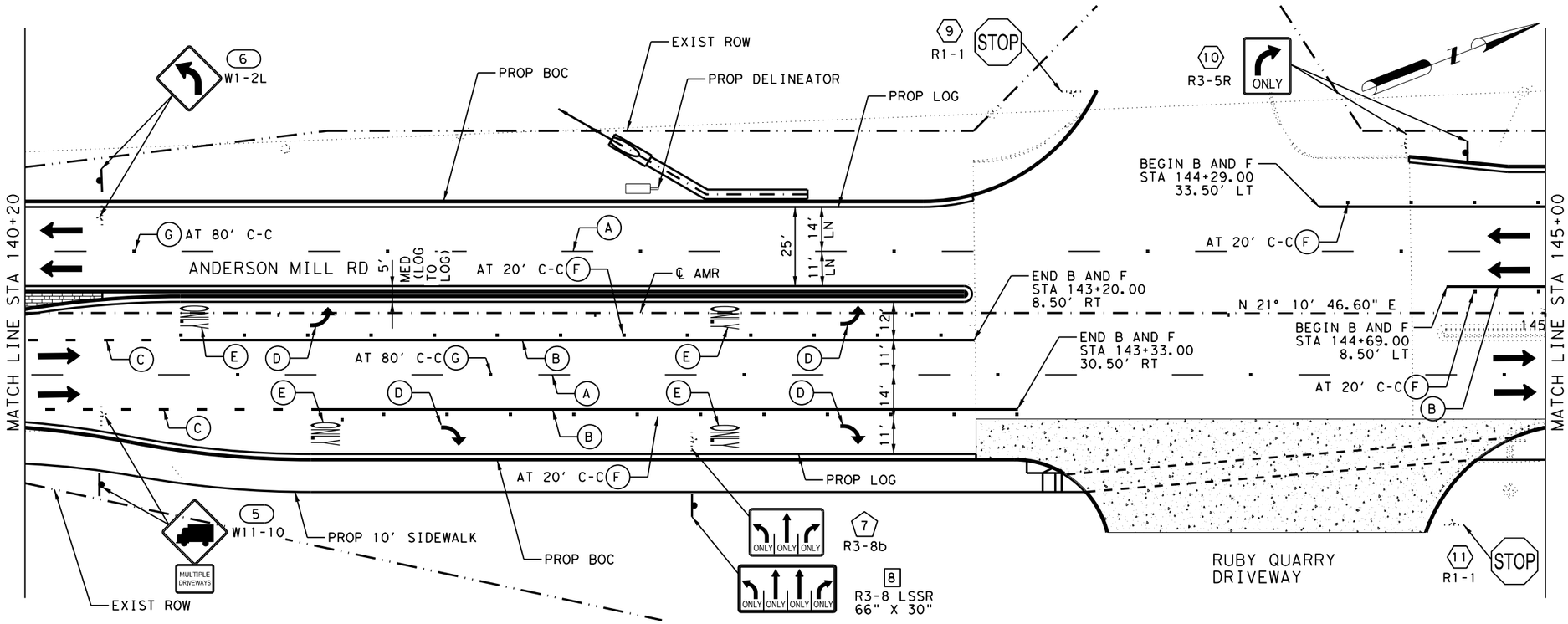


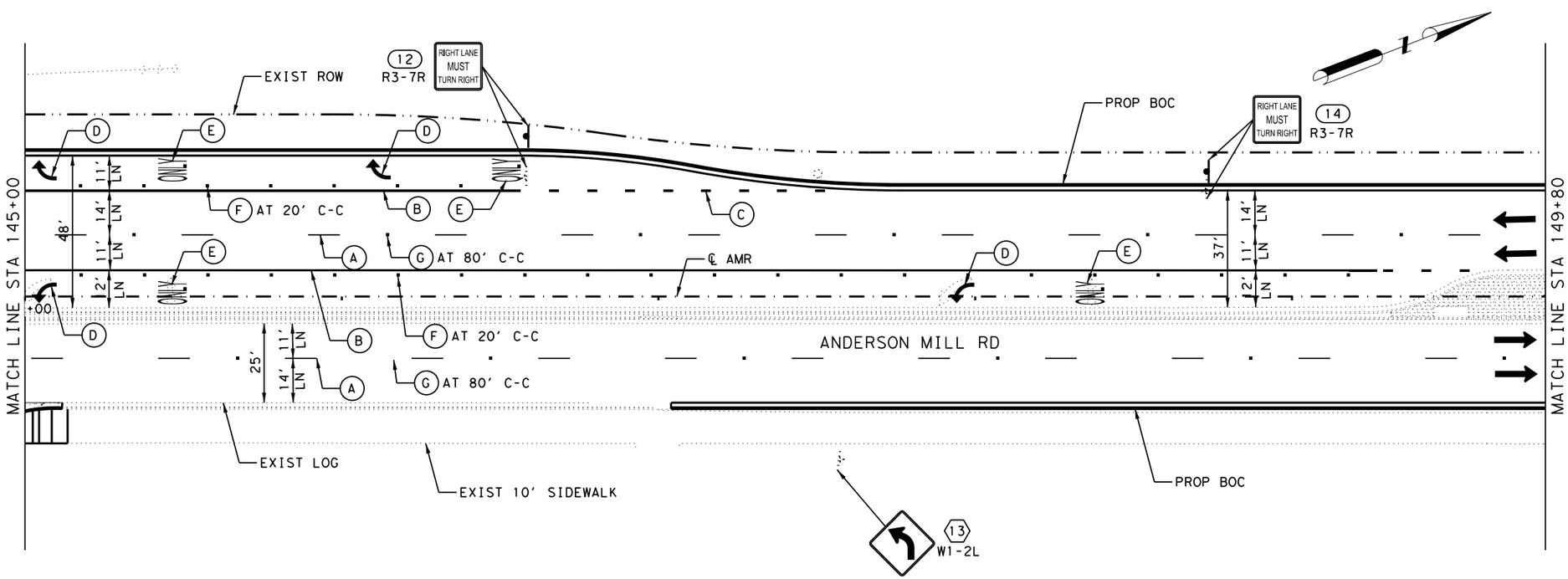


## SIGNING LEGEND

- (X) EXIST SIGN TO REMAIN
- (X) EXIST SIGN TO BE RELOCATED
- (X) EXIST SIGN TO BE REMOVED
- [X] PROPOSED SIGN

## PAVEMENT MARKING LEGEND

- (A) PAV MARK TY I (W) 4"(BRK)
- (B) PAV MARK TY I (W) 8"(SLD)
- (C) PAV MARK TY I (W) 8"(DASH)
- (D) PAV MARK TY I (W) (ARROW)
- (E) PAV MARK TY I (W) (WORD)
- (F) REFL PAV MRKR TY I-C
- (G) REFL PAV MRKR TY II-C-R

| NO | DATE | ISSUES AND REVISIONS |
|---|---|---|

STATE OF TEXAS
AUSTIN S. HELTON
124922
LICENSED
PROFESSIONAL ENGINEER
8/5/2022

Kimley»Horn F-928
10814 JOLLYVILLE ROAD
BLDG. 4, STE 300
AUSTIN, TX 78759
PHONE: 512-418-1771

# SIGNING AND PAVEMENT MARKING

SHEET 3 OF 5

ANDERSON MILL ROAD PHASE 2

CEDAR PARK



FILENAME: AMR+SPMD+03.dgn
PLOTTED: 8/5/2022 3:59:16 PM

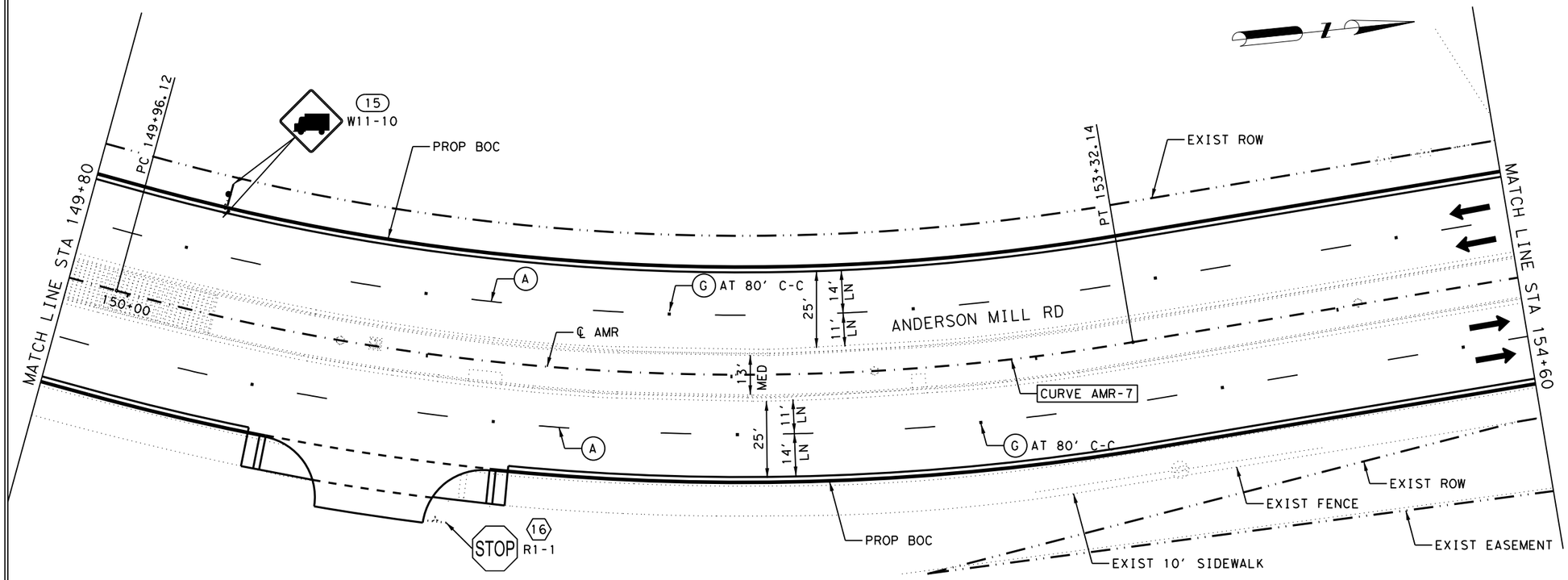


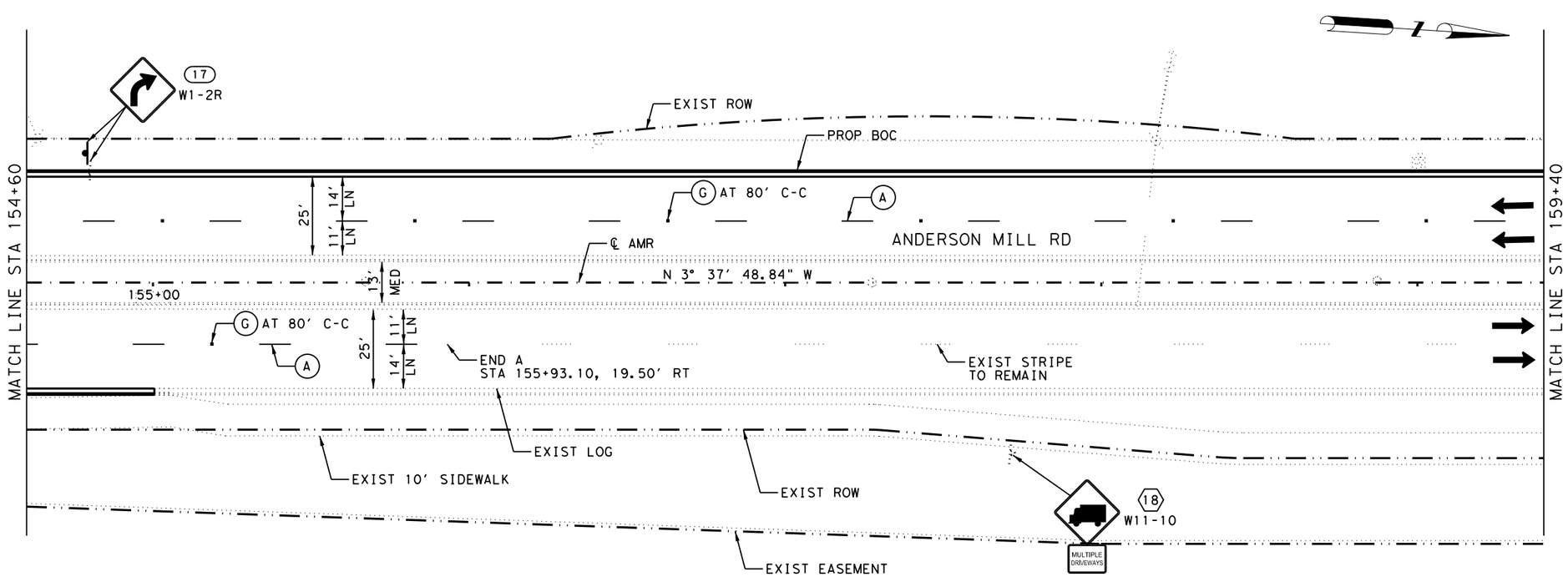


## SIGNING LEGEND

- (X) EXIST SIGN TO REMAIN
- (X) EXIST SIGN TO BE RELOCATED
- (X) EXIST SIGN TO BE REMOVED
- [X] PROPOSED SIGN

## PAVEMENT MARKING LEGEND

- (A) PAV MARK TY I (W) 4"(BRK)
- (B) PAV MARK TY I (W) 8"(SLD)
- (C) PAV MARK TY I (W) 8"(DASH)
- (D) PAV MARK TY I (W) (ARROW)
- (E) PAV MARK TY I (W) (WORD)
- (F) REFL PAV MRKR TY I-C
- (G) REFL PAV MRKR TY II-C-R

| NO | DATE | ISSUES AND REVISIONS |
|---|---|---|
| | | |

STATE OF TEXAS
AUSTIN S. HELTON
124922
LICENSED
PROFESSIONAL ENGINEER
8/5/2022

Kimley»Horn F-928
10814 JOLLYVILLE ROAD
BLDG. 4, STE 300
AUSTIN, TX 78759
PHONE: 512-418-1771

# SIGNING AND PAVEMENT MARKING

SHEET 4 OF 5

ANDERSON MILL ROAD PHASE 2

CEDAR PARK



FILENAME: AMR+SPMD+04.dgn
PLOTTED: 8/5/2022 3:59:24 PM

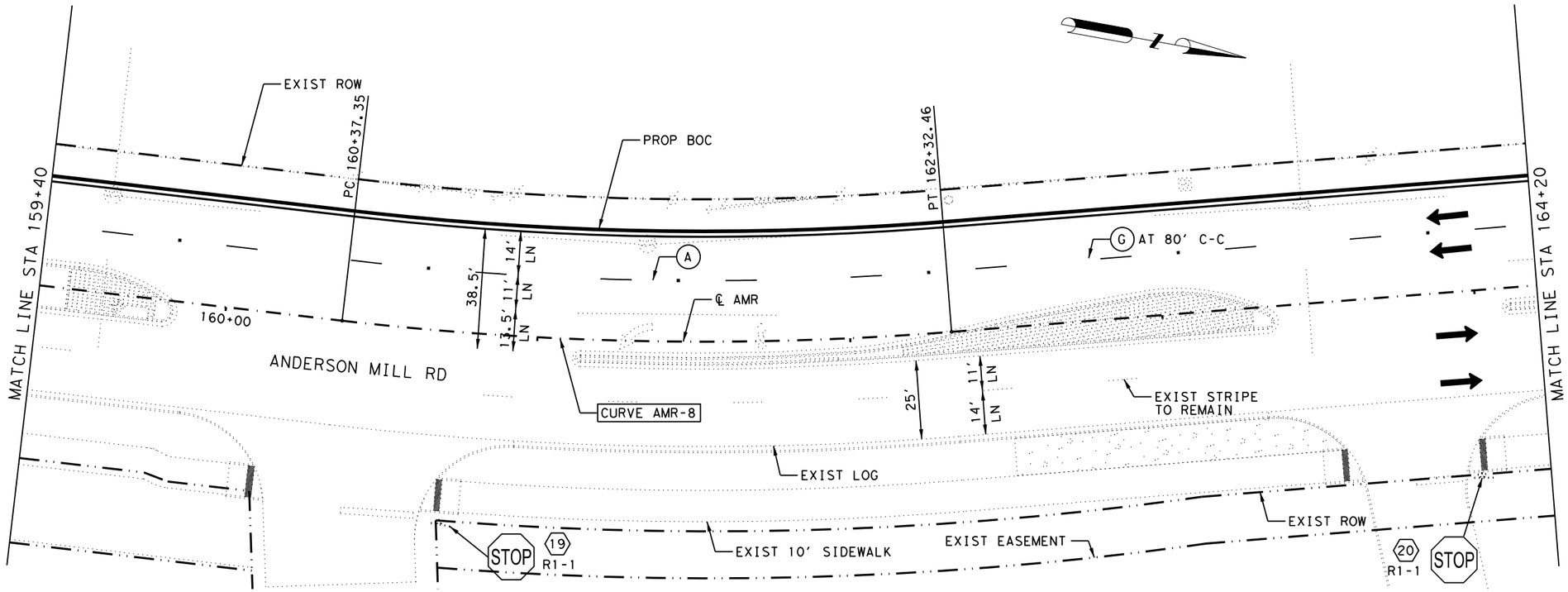


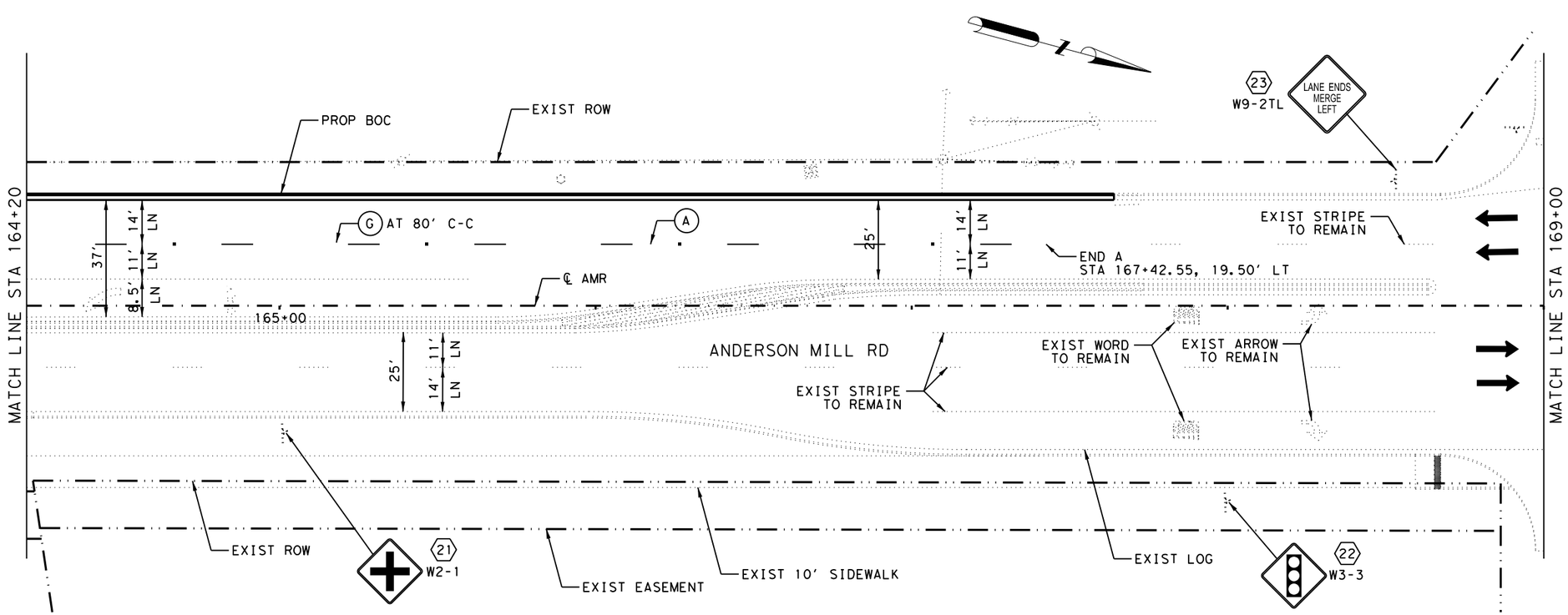


## SIGNING LEGEND

- (X) EXIST SIGN TO REMAIN
- (X) EXIST SIGN TO BE RELOCATED
- (X) EXIST SIGN TO BE REMOVED
- [X] PROPOSED SIGN

## PAVEMENT MARKING LEGEND

- (A) PAV MARK TY I (W) 4"(BRK)
- (B) PAV MARK TY I (W) 8"(SLD)
- (C) PAV MARK TY I (W) 8"(DASH)
- (D) PAV MARK TY I (W) (ARROW)
- (E) PAV MARK TY I (W) (WORD)
- (F) REFL PAV MRKR TY I-C
- (G) REFL PAV MRKR TY II-C-R

| NO | DATE | ISSUES AND REVISIONS |
|---|---|---|
| | | |

STATE OF TEXAS
AUSTIN S. HELTON
124922
LICENSED
PROFESSIONAL ENGINEER
8/5/2022

Kimley»Horn
F-928
10814 JOLLYVILLE ROAD
BLDG. 4, STE 300
AUSTIN, TX 78759
PHONE: 512-418-1771

# SIGNING AND PAVEMENT MARKING

SHEET 5 OF 5

ANDERSON MILL ROAD PHASE 2

CEDAR PARK



FILENAME: AMR*SPMD*05.dgn
PLOTTED: 8/5/2022 3:59:33 PM

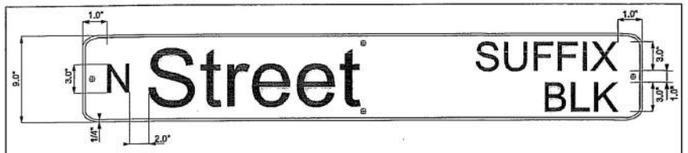


## GROUND MOUNTED STREET NAME SIGN

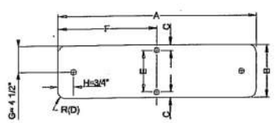


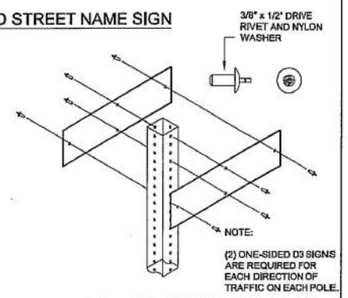


### TABLE - D3 SIGNS

| A | B | C | D | E | F | T |
|---|---|---|---|---|---|---|
| 24" | 9" | 1/2" | 3/4" | 8" | 12" | 0.08" |
| 30" | 9" | 1/2" | 3/4" | 8" | 15" | 0.08" |
| 36" | 9" | 1/2" | 3/4" | 8" | 18" | 0.08" |
| 42" | 9" | 1/2" | 3/4" | 8" | 21" | 0.08" |
| 48" | 9" | 1/2" | 3/4" | 8" | 24" | 0.08" |
| 54" | 9" | 1/2" | 3/4" | 8" | 27" | 0.08" |

### SIGN TO POLE INSTALLATION

| | |
|---|---|
| HEIGHT | 9" |
| LENGTH | 24" MIN. 54 MAX. 6" INCREMENTS OF LENGTH |
| THICKNESS | 0.08" |
| SUBSTRATE | ALUMINUM ALLOY, 6061-T-6, OR TYPE IV 5052-H38 (ASTM B-209) |
| SIGN FACE MATERIALS | GREEN FILM OVER HIGH INTENSITY PRISMATIC SHEETING |
| LEGENDS AND SYMBOLS | SERIES D (USUAL) SERIES C OR B FOR MAXIMUM LENGTH SIGN BLANK, IF NECESSARY |
| COLOR | WHITE LEGEND ON GREEN BACKGROUND WITH ½" WHITE BORDER |

| CITY OF AUSTIN DEPARTMENT OF PUBLIC WORKS | GROUND MOUNTED TRAFFIC AND STREET NAME SIGNS | STANDARD NO. |
|---|---|---|
| Kui Burchard-Gray 1/4/11 ADOPTED | THE ARCHITECT/ENGINEER ASSUMES RESPONSIBILITY FOR APPROPRIATE USE OF THIS STANDARD. | 824-2 1 OF 3 |

## TYPE "U" MOUNT
## PERFORATED SQUARE METAL TUBING (DRIVEABLE)

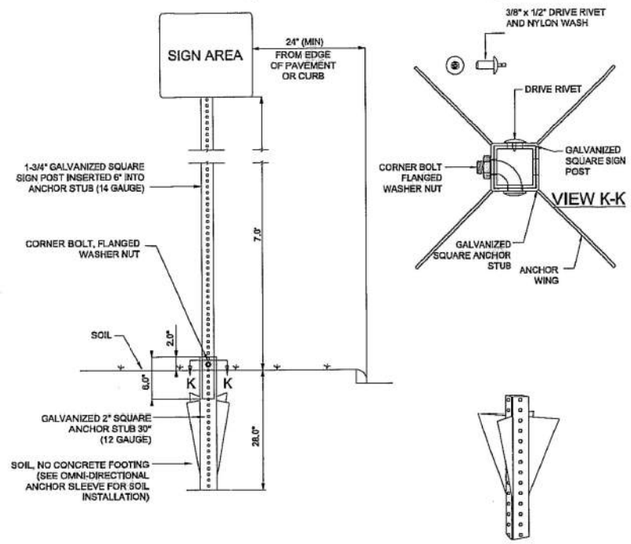


### MULTI-DIRECTIONAL ANCHOR

FOR USE IN SOIL

SIGN POST:
12 GAUGE
2" SQUARE x 30"

WINGS:
10 GAUGE
4" x 12"
ASTM A569 COM. QUALITY WELDED TO ALL 4 CORNERS STARTING 2 1/2" DOWN FROM TOP

| CITY OF AUSTIN DEPARTMENT OF PUBLIC WORKS | GROUND MOUNTED TRAFFIC AND STREET NAME SIGNS - SOIL | STANDARD NO. |
|---|---|---|
| Kui Burchard-Gray 1/4/11 ADOPTED | THE ARCHITECT/ENGINEER ASSUMES RESPONSIBILITY FOR APPROPRIATE USE OF THIS STANDARD. | 824-2 2 OF 3 |

## TYPE "U" MOUNT
## PERFORATED SQUARE METAL TUBING (DRIVEABLE)

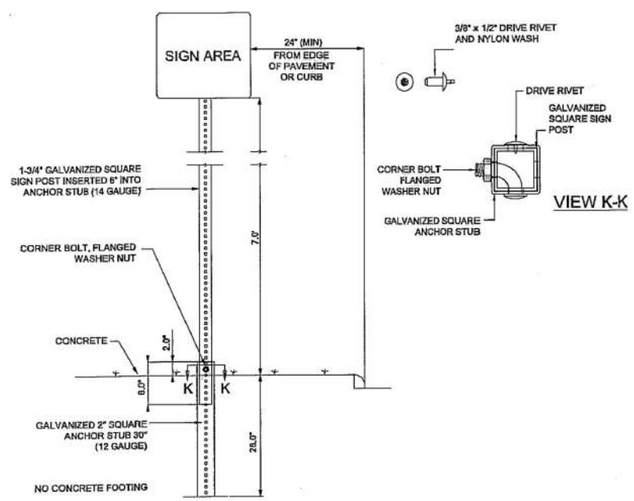


| CITY OF AUSTIN DEPARTMENT OF PUBLIC WORKS | GROUND MOUNTED TRAFFIC AND STREET NAME SIGNS - CONCRETE | STANDARD NO. |
|---|---|---|
| Kui Burchard-Gray 1/4/11 ADOPTED | THE ARCHITECT/ENGINEER ASSUMES RESPONSIBILITY FOR APPROPRIATE USE OF THIS STANDARD. | 824-2 3 OF 3 |

| NO | DATE | ISSUES AND REVISIONS |
|---|---|---|

Kimley»Horn F-928
10814 JOLLYVILLE ROAD
BLDG. 4, STE 200
AUSTIN, TX 78759
PHONE: 512-418-1771

STANDARD DETAILS
TRAFFIC
SHEET 1 OF 1
ANDERSON MILL ROAD PHASE 2

CEDAR PARK



FILENAME: AMR*TRAFFIC*STD*01.dgn
PLOTTED: 8/5/2022 3:59:46 PM

DISCLAIMER:
The use of this standard is governed by the "Texas Engineering Practice Act". No warranty of any kind is made by TxDOT for any purpose whatsoever. TxDOT assumes no responsibility for the conversion of this standard to other formats or for incorrect results or damages resulting from its use.

## REFLECTOR UNIT SIZES FOR DELINEATORS AND OBJECT MARKERS

| | SIZE 1 | SIZE 2 | SIZE 3 | SIZE 4 |
|---|---|---|---|---|
| DEVICE | 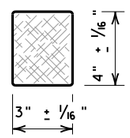 | 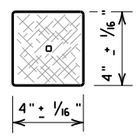 | 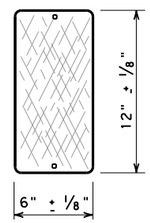 | 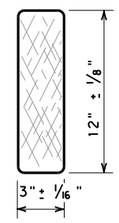 |
| SHEETING | Yellow, White or Red Type B or C reflective sheeting | | | |
| NOTE | 1. Size 1 and 4 - Direct applied reflective sheeting for use on flexible post (flx).<br>2. Size 2 and 3 - For use on wing channel (wc) post only. Use approved metal, plastic or fiberglass backplate with 17/64" mounting holes. | | | |



## DELINEATORS

| | SINGLE | | DOUBLE | |
|---|---|---|---|---|
| DEVICE | 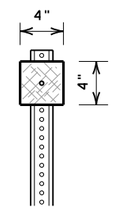 | 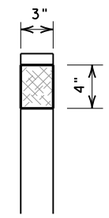 | 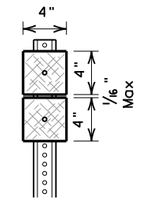 | 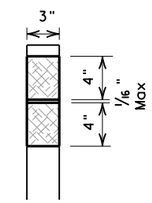 |
| | 1-Size 2 reflector unit | 1-Size 1 reflector unit | 2-Size 2 reflector units | 2-Size 1 reflector units |
| SHEETING | Yellow, White or Red Type B or C Reflective Sheeting | | | |
| POST TYPE | WC | YFLX, WFLX | WC | YFLX, WFLX |
| MOUNT TYPE | GND | GND, SRF | GND | GND, SRF |



## D & OM DESCRIPTIVE CODES

INSTL DEL ASSM (D-XX)SZ X (XXXX)XXX(XX)

**NUMBER OF REFLECTORS**
S = Single
D = Double

**COLOR OF REFLECTORS**
W = White
Y = Yellow
R = Red

**REFLECTOR UNIT SIZE**
1 or 2

**TYPE OF POST OR DELINEATOR**
WC = Wing Channel Post
YFLX = Yellow Flexible Post
WFLX = White Flexible Post
BRF = Barrier Reflector

**TYPE OF MOUNT**
GND = Embedded (drivable or set in concrete)
CTB = Concrete Barrier Mount
GF1 or GF2 = Guard Fence Attachment
SRF = Surface Mount

**DIRECTION**
If Required
BI = Bi-Directional
BR = Bi-Directional with red on back

INSTL OM ASSM (OM-XX) (XXXX)XXX(XX)

**TYPE OF OBJECT MARKER**
1, 2, 3, or 4

**NUMBER OF REFLECTORS OR DIRECTION**
X = 3-Size 2 reflector units (Type 2 only)
Y = 1-Size 3 reflector unit (Type 2 only)
Z = 3-Size 1 or 1-Size 4 reflector unit(s) (Type 2 only)
L = Left Side (Type 3 Object Marker only)
R = Right Side (Type 3 Object Marker only)
C = Center (Type 3 Object Marker only)

**TYPE OF POST**
WC = Wing Channel Post
WFLX = White Flexible Post
TWT = Thin Walled Tubing

**TYPE OF MOUNT**
GND = Embedded (drivable)
SRF = Surface Mount
WAS = Wedge Anchor Steel
WAP = Wedge Anchor Plastic

**DIRECTION**
If Required
BI = Bi-Directional

## OBJECT MARKERS

| | Type 1 (OM-1) | Type 2 (OM-2) | | | Type 3 (OM-3) | | | Type 4 (OM-4) |
|---|---|---|---|---|---|---|---|---|
| | OM-1 | OM-2X | OM-2Y | OM-2Z | OM-3L | OM-3R | OM-3C | OM-4 |
| DEVICE | 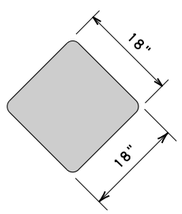 | 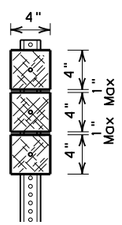 | 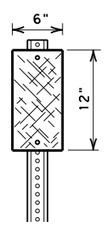 | 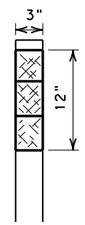 | 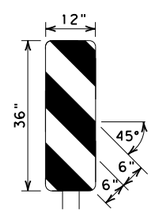 | 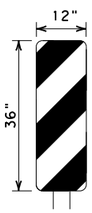 | 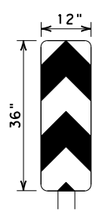 | 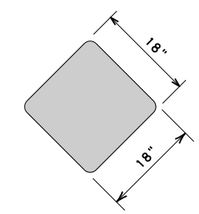 |
| | | 3-Size 2 reflector units | 1-Size 3 reflector unit | 3-Size 1 reflector units or 1-Size 4 reflector unit | | | | |
| SHEETING | Yellow-Type $B_{FL}$ or $C_{FL}$ Sheeting | Yellow - Type B or C Sheeting | | | Alternating acrylic black and retroflective yellow - Type $B_{FL}$ or $C_{FL}$ Sheeting | | | Red -Type $B_{FL}$ or $C_{FL}$ Sheeting |
| POST TYPE | TWT | WC | WC | WFLX | TWT | | | TWT |
| MOUNT TYPE | WAS, WAP | GND | GND | GND, SRF | WAS, WAP | | | WAS, WAP |



| DEPARTMENTAL MATERIAL SPECIFICATIONS | |
|---|---|
| FLEXIBLE DELINEATOR & OBJECT MARKER POSTS (EMBEDDED & SURFACE MOUNT TYPES) | DMS-4400 |
| SIGN FACE MATERIALS | DMS-8300 |
| DELINEATORS, OBJECT MARKERS AND BARRIER REFLECTORS | DMS-8600 |

## BARRIER REFLECTORS (BRF)

| | GF1 | GF2 | CTB |
|---|---|---|---|
| DEVICE | 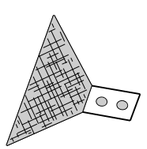 | | 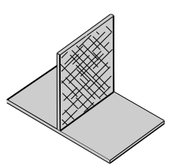 |
| | 1. Barrier reflectors shall meet the requirements of DMS 8600.<br>2. Approved Barrier Reflectors are listed on the "Barrier Reflectors" Material Producer List at: www.txdot.gov. | | |
| SHEETING | Yellow, White, Red | | |
| NOTE | 1. Reflective sheeting shall have a minimum dimension of 3 inches and minimum surface area of 9 square inches. | | |

## CHEVRONS

| | | | | |
|---|---|---|---|---|
| DEVICE | 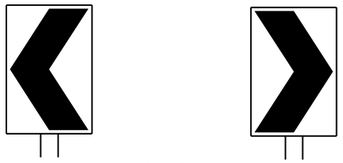 W1-8 | | | |
| SIZE (W x L) | 18"x 24" (Conventional) | 24"x 30" (Conventional Oversize) | 30"x 36" (Expressway) | 36" x 48" (Freeway) |
| MOUNTING HEIGHT | 4'-0" or 7'-0" | | 7'-0" Only | |
| NOTE | 1. CHEVRON (W1-8) signs and ONE DIRECTION LARGE ARROW (W1-6) Signs shall be installed per Sign Mounting Details (SMD) Standard Sheets and paid under Item 644 (Small Roadside Sign Assemblies).<br>2. When there is a need to increase conspicuity, the Texas version of the ONE DIRECTION LARGE ARROW sign (W1-9T) may be used instead of the ONE DIRECTION LARGE ARROW (W1-6). | | | |

## ONE DIRECTION LARGE ARROW

| | | |
|---|---|---|
| DEVICE | 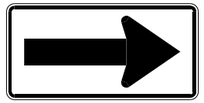 W1-6 | |
| SIZE (W x L) | 48" x 24" (Conventional) | 60" x 30" (Expressway & Freeway) |
| MOUNTING HEIGHT | 7'-0" | |

**NOTE:**

Delineator and object marker substrates and sign substrates shall be 0.080" Aluminum sign blank to conform to ASTM B-209 Alloy 6061-T6 or approved alternative.

Texas Department of Transportation — Traffic Safety Division Standard

# DELINEATOR & OBJECT MARKER MATERIAL DESCRIPTION

# D & OM(1)-20

| FILE: dom1-20.dgn | DN: TXDOT | CK: TXDOT | DW: TXDOT | CK: TXDOT |
|---|---|---|---|---|
| © TxDOT August 2004 | CONT | SECT | JOB | HIGHWAY |
| REVISIONS | | | | |
| 10-09 3-15 | DIST | COUNTY | | SHEET NO. |
| 4-10 7-20 | | | | 133 |

20A

DATE:
FILE:

# POST TYPE AND SUPPORT FOUNDATION DETAILS

## WING CHANNEL (WC)

### GND

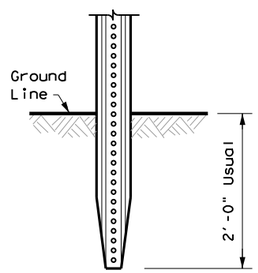


**NOTES**

1. Embedded Wing Channel (WC) post option may be used for Type 2 Object Markers and Delineators only.
2. 1.12 lbs/ft steel per ASTM A 1011 SS Gr. 50, or ASTM A499.

## FLEXIBLE POSTS (YFLX, WFLX)

### GND

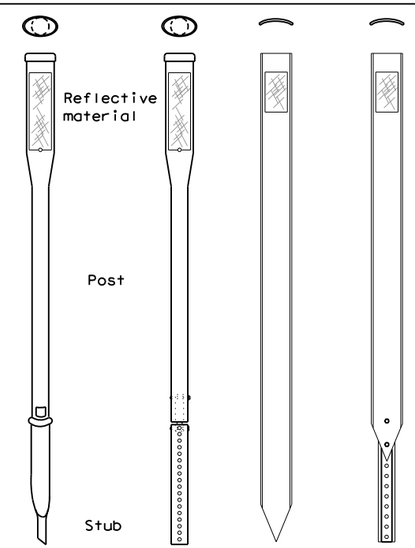


EMBEDDED

### SRF

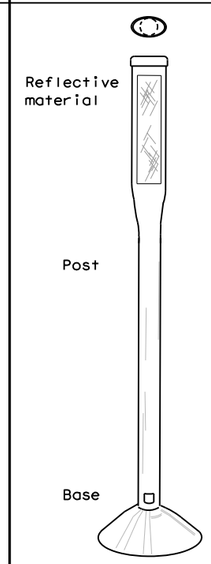


SURFACE MOUNT

**NOTES**

1. See "Flexible Delineator and Object Marker Posts" Material Producer List for approved devices.
2. Install per manufacturer's recommendations.
3. Post length may vary to meet field conditions.
4. When using yellow delineators with flexible posts to separate opposing direction of travel, such as centerline or median use, the flexible posts shall be yellow.

## WEDGE ANCHOR SYSTEMS

### WAS

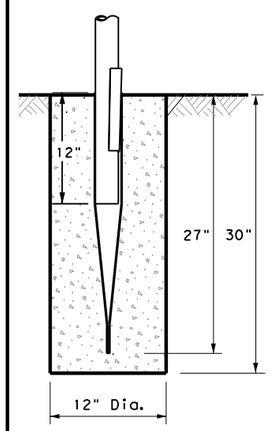


STEEL

### WAP

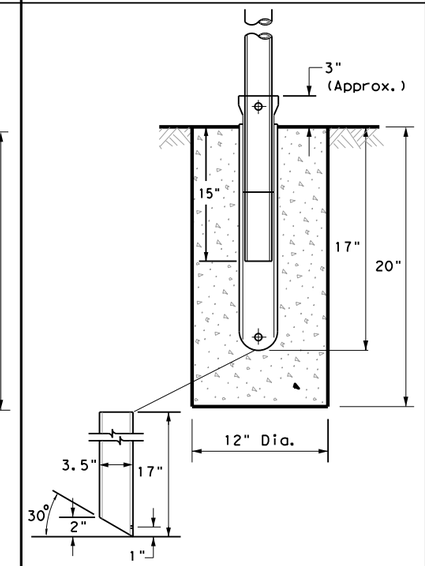


PLASTIC

**NOTE**

1. Install per manufacturer's recommendations.

# TYPE OF BARRIER MOUNTS

## GUARD FENCE ATTACHMENT

### GF1

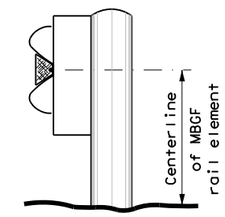


### GF2

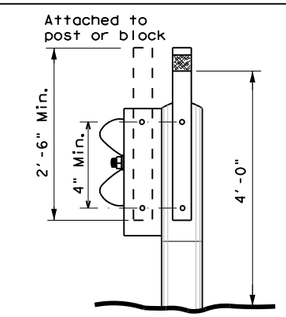


## CONCRETE TRAFFIC BARRIER (CTB)

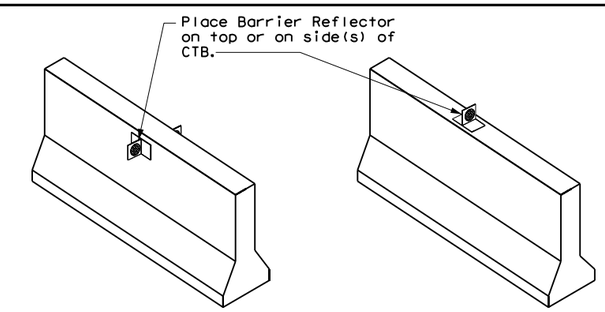


**GENERAL NOTES**

1. Place delineators on a section of roadway at a consistent distance from the edge of pavement.
2. Where a restriction prevents consistent placement from the pavement edge, place the affected object markers in line with the innermost edge of the obstruction.
3. When Type 2 object markers and delineators are more than 8'-0" from the edge of the pavement, it may not be possible to maintain a height of approximately 4'-0". If this is the case, place the object marker or delineator as close to the desired height as possible.
4. Install all delineators, object markers and barrier reflectors in accordance with the manufacturer's recommendation.
5. Barrier reflectors should be installed a minimum of 18 inches above the edge of the pavement surface.
6. Diagonal stripes on Type 3 object markers shall slope down toward the intended travel lane.

## TYPES 1, 3, AND 4 OBJECT MARKERS AND CHEVRONS

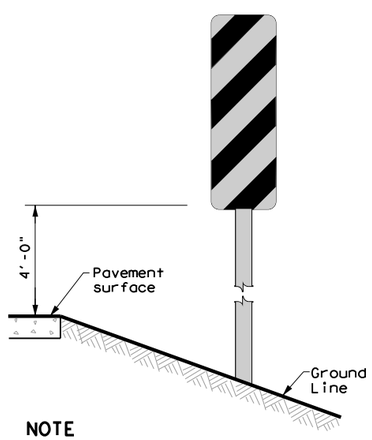


**NOTE**

Mounting at 4 feet to the bottom of the chevron is permitted for chevrons that will not exceed a height of 6'-6" to the top of the chevron (sizes 24" x 30" and smaller)

## CHEVRONS AND ONE DIRECTION LARGE ARROW SIGN

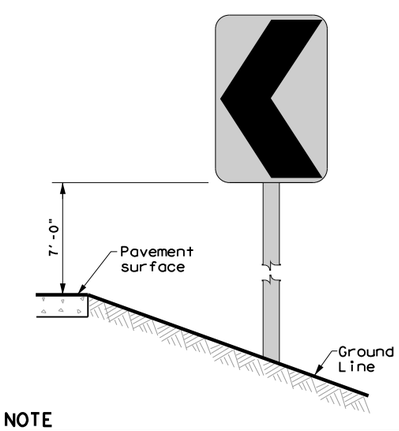


**NOTE**

Chevrons 30" x 36" and larger shall be mounted at a height of 7' to the bottom of the chevron. Chevron sign and ONE DIRECTION LARGE ARROW sign (W1-9T) shall be installed per SMD standard sheets and paid under item 644.

## DELINEATORS AND TYPE 2 OBJECT MARKERS

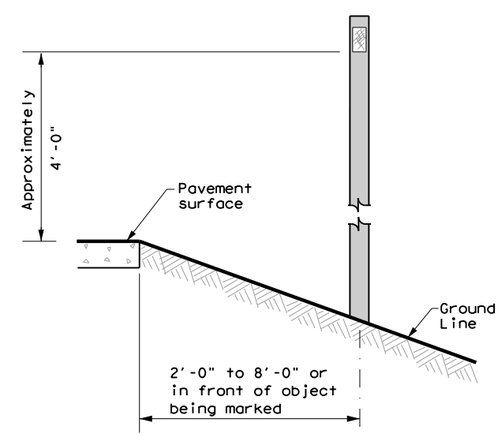


See general notes 1, 2 and 3.

Texas Department of Transportation — Traffic Safety Division Standard

# DELINEATOR & OBJECT MARKER INSTALLATION

# D & OM(2)-20

| FILE: dom2-20.dgn | DN: TXDOT | CK: TXDOT | DW: TXDOT | CK: TXDOT |
|---|---|---|---|---|
| © TxDOT August 2004 | CONT | SECT | JOB | HIGHWAY |
| REVISIONS | | | | |
| 10-09 3-15 | DIST | | COUNTY | SHEET NO. |
| 4-10 7-20 | | | | 134 |

20B

DISCLAIMER:
The use of this standard is governed by the "Texas Engineering Practice Act". No warranty of any kind is made by TxDOT for any purpose whatsoever. TxDOT assumes no responsibility for the conversion of this standard to other formats or for incorrect results or damages resulting from its use.

DATE:
FILE:

DISCLAIMER:
The use of this standard is governed by the "Texas Engineering Practice Act". No warranty of any kind is made by TxDOT for any purpose whatsoever. TxDOT assumes no responsibility for the conversion of this standard to other formats or for incorrect results or damages resulting from its use.

## CROSSOVERS

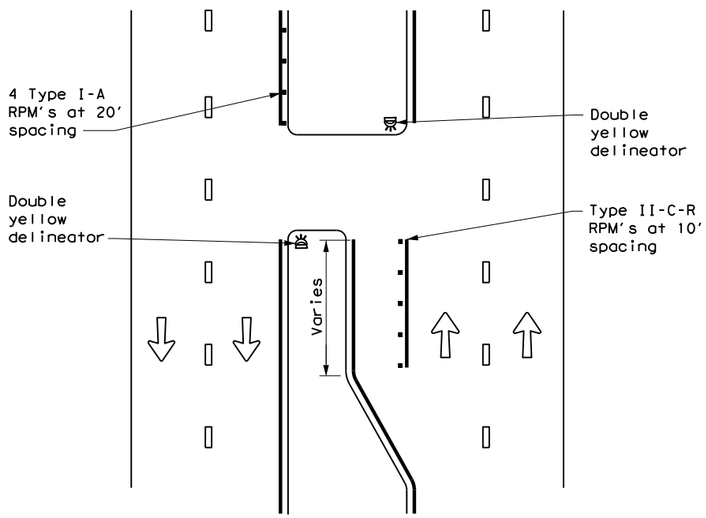


DETAIL 1

## FOR CULVERTS WITHOUT MBGF

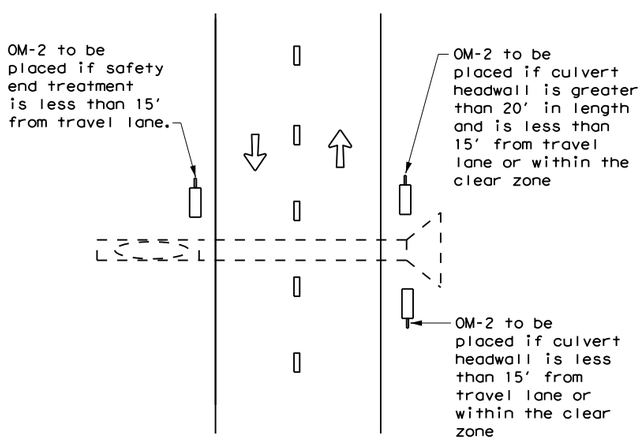


DETAIL 2

## FREEWAY DELINEATION FOR RAMPS AND ACCELERATION/DECELERATION LANES

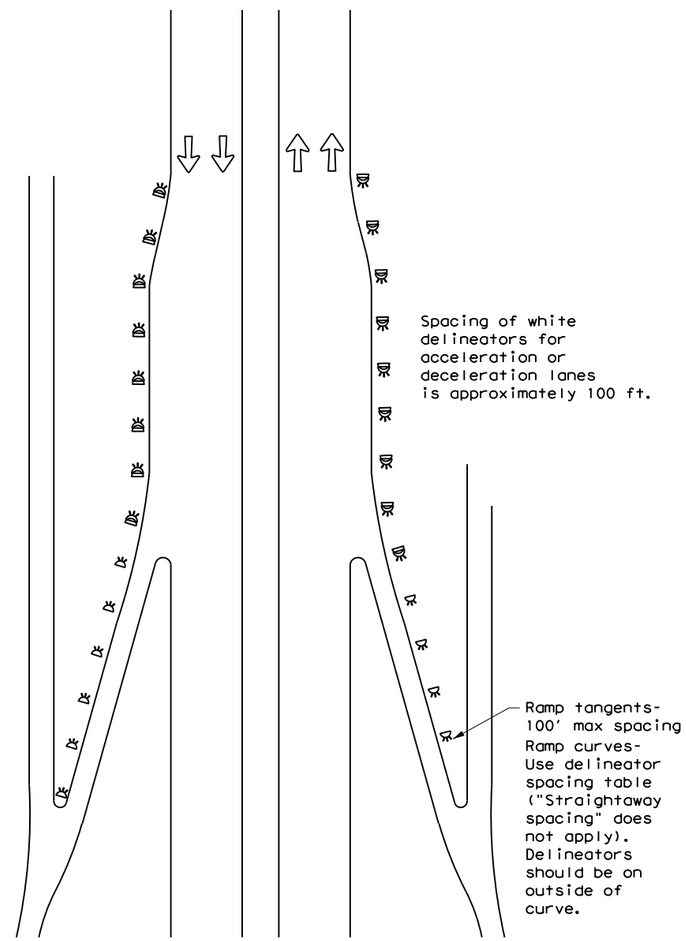


DETAIL 3

## TYPICAL APPLICATION OF DEAD END BARRICADE

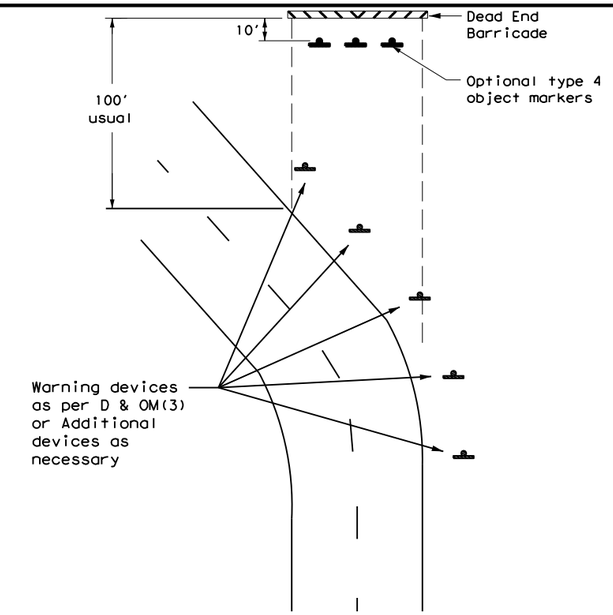


DETAIL 4

## TYPICAL DEAD END BARRICADE INSTALLATION

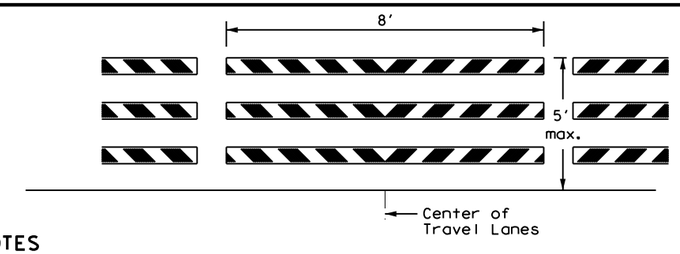


NOTES

1. Barricade striping shall be red and white reflective sheeting for all permanent road closures.
2. Barricade striping is red and white sloping toward the center of the roadway.
3. Type 3 Barricade Supports should be anchored to soil or pavement as described in compliant Work Zone Traffic Control Devices List, section D.2.f and D.2.g.

DETAIL 5

## LEGEND

| | |
|---|---|
| | Bidirectional Delineator |
| | Delineator |
| | OM-3 |
| | Barricade |
| | Sign |
| | OM-2 |
| | Double Delineator |

Texas Department of Transportation

Traffic Safety Division Standard

# DELINEATOR & OBJECT MARKER PLACEMENT DETAILS

# D & OM(4)-20

| | | | | |
|---|---|---|---|---|
| FILE: dom4-20.dgn | DN: TXDOT | CK: TXDOT | DW: TXDOT | CK: TXDOT |
| © TxDOT August 2004 | CONT | SECT | JOB | HIGHWAY |
| REVISIONS 3-15 7-20 | DIST | COUNTY | | SHEET NO. 135 |

20D

DATE:
FILE:

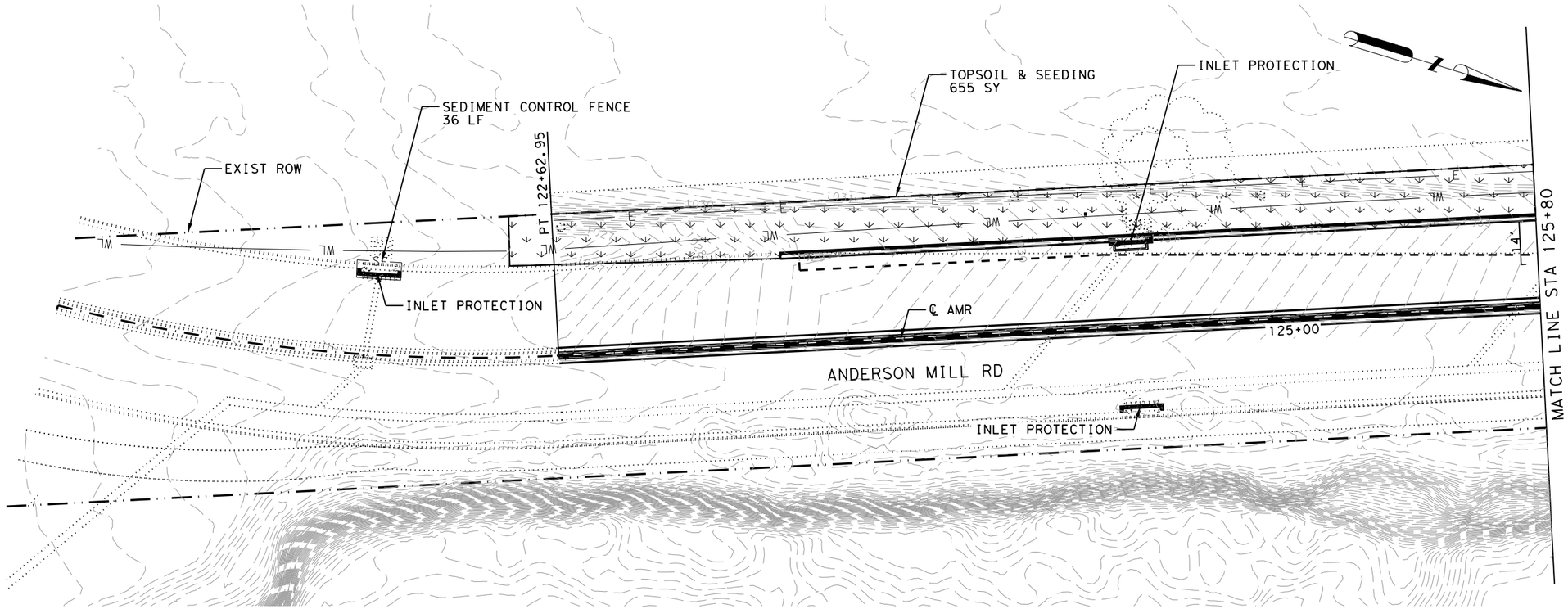


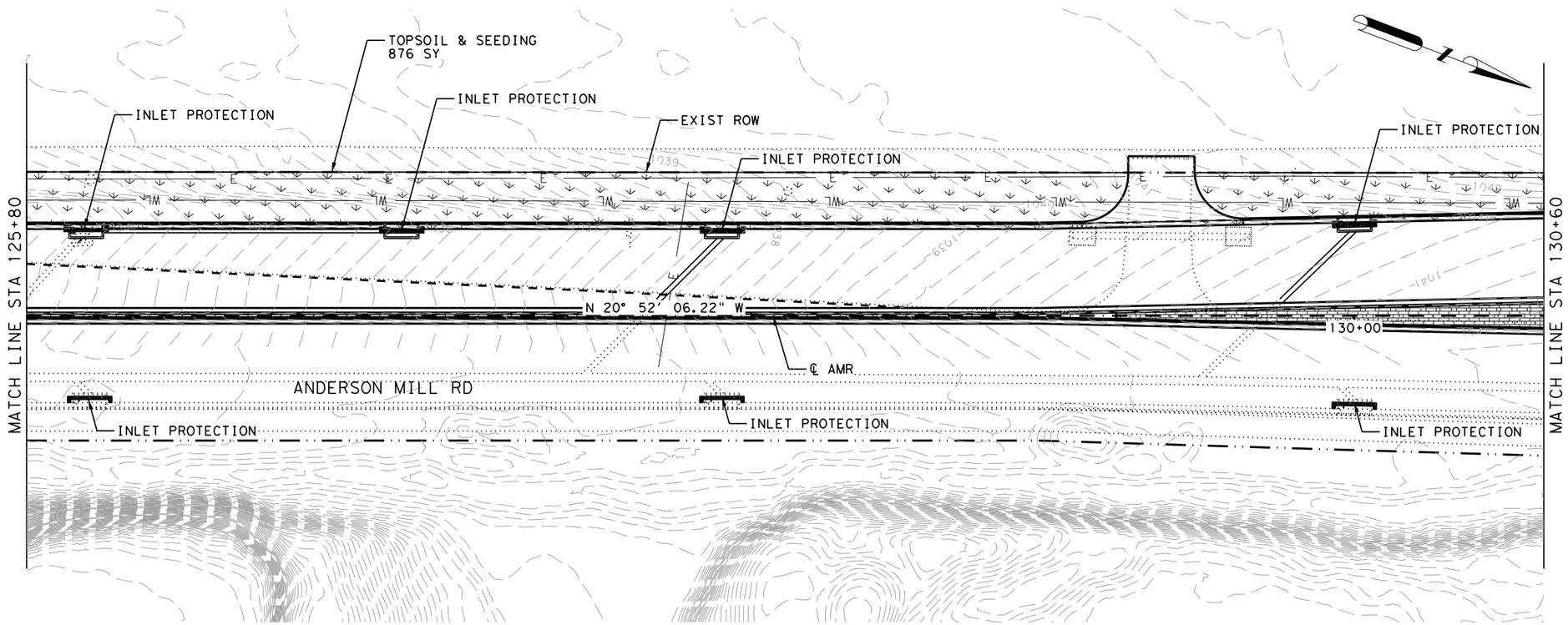


## EROSION CONTROL LEGEND

- INLET PROTECTION
- TOPSOIL & SEEDING
- —SF— SEDIMENT CONTROL FENCE

| NO | DATE | ISSUES AND REVISIONS |
|---|---|---|

STATE OF TEXAS
AUSTIN S. HELTON
124922
LICENSED
PROFESSIONAL ENGINEER
8/5/2022

Kimley»Horn
F-928
10814 JOLLYVILLE ROAD
BLDG. 4, STE 300
AUSTIN, TX 78759
PHONE: 512-418-1771

# EROSION CONTROL LAYOUT

SHEET 1 OF 5
ANDERSON MILL ROAD PHASE 2

CEDAR PARK



FILENAME: AMR*SW3P*01.dgn
PLOTTED: 8/5/2022 4:02:54 PM

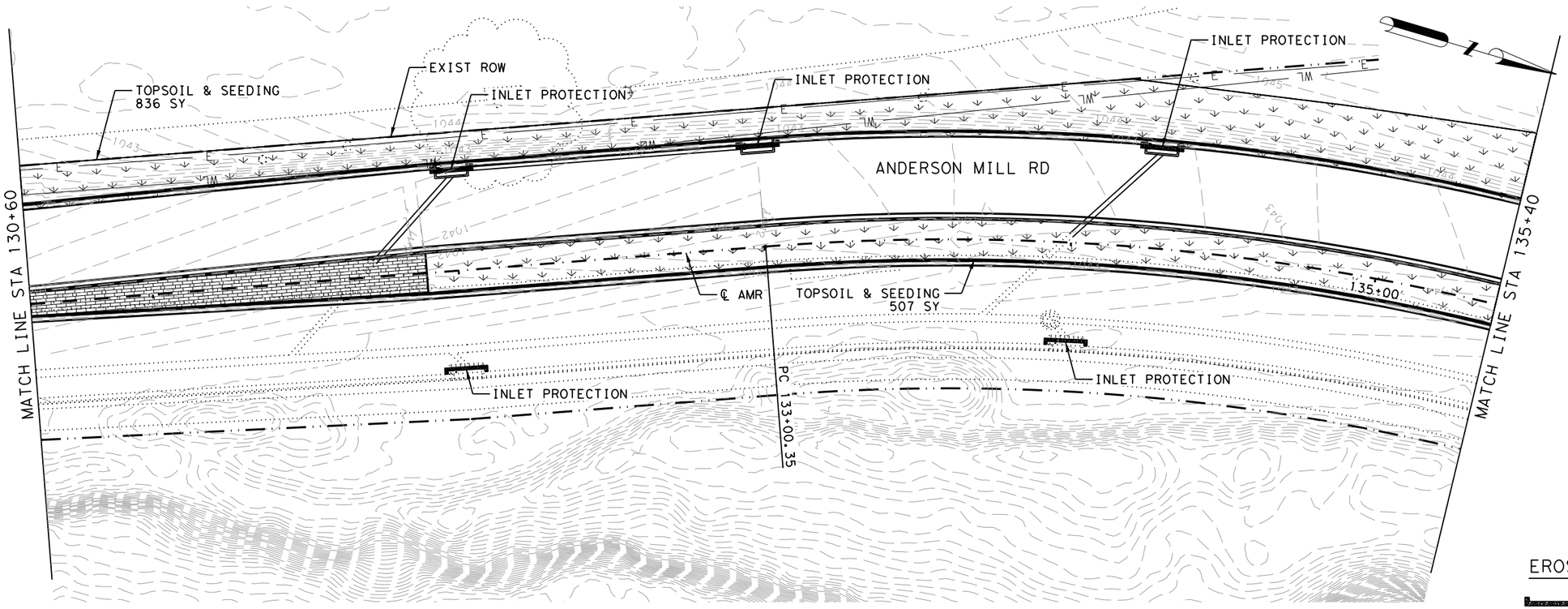


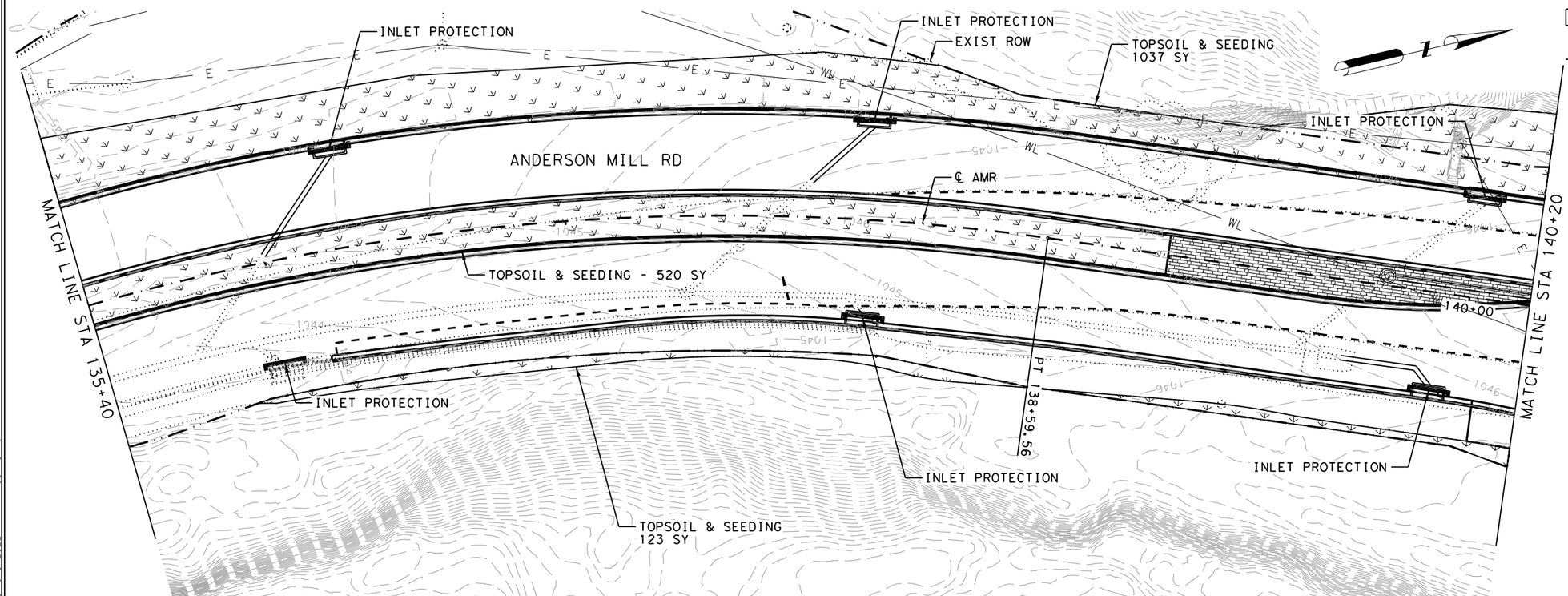


## EROSION CONTROL LEGEND

- INLET PROTECTION
- TOPSOIL & SEEDING
- SF — SEDIMENT CONTROL FENCE

| NO | DATE | ISSUES AND REVISIONS |
|---|---|---|
| | | |

STATE OF TEXAS
AUSTIN S. HELTON
124922
LICENSED
PROFESSIONAL ENGINEER
8/5/2022

Kimley»Horn
F-928
10814 JOLLYVILLE ROAD
BLDG. 4, STE 300
AUSTIN, TX 78759
PHONE: 512-418-1771

# EROSION CONTROL LAYOUT

SHEET 2 OF 5
ANDERSON MILL ROAD PHASE 2

CEDAR PARK



FILENAME: AMR*SW3P*02.dgn
PLOTTED: 8/5/2022 4:03:13 PM

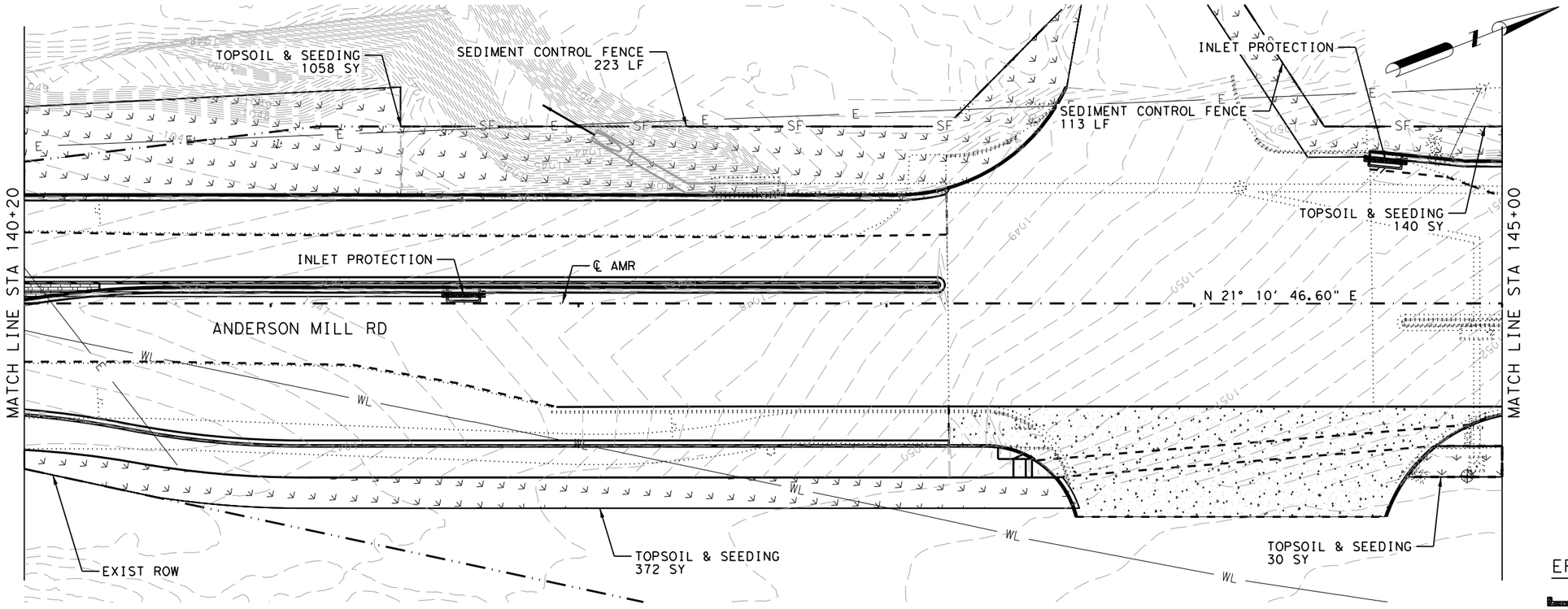


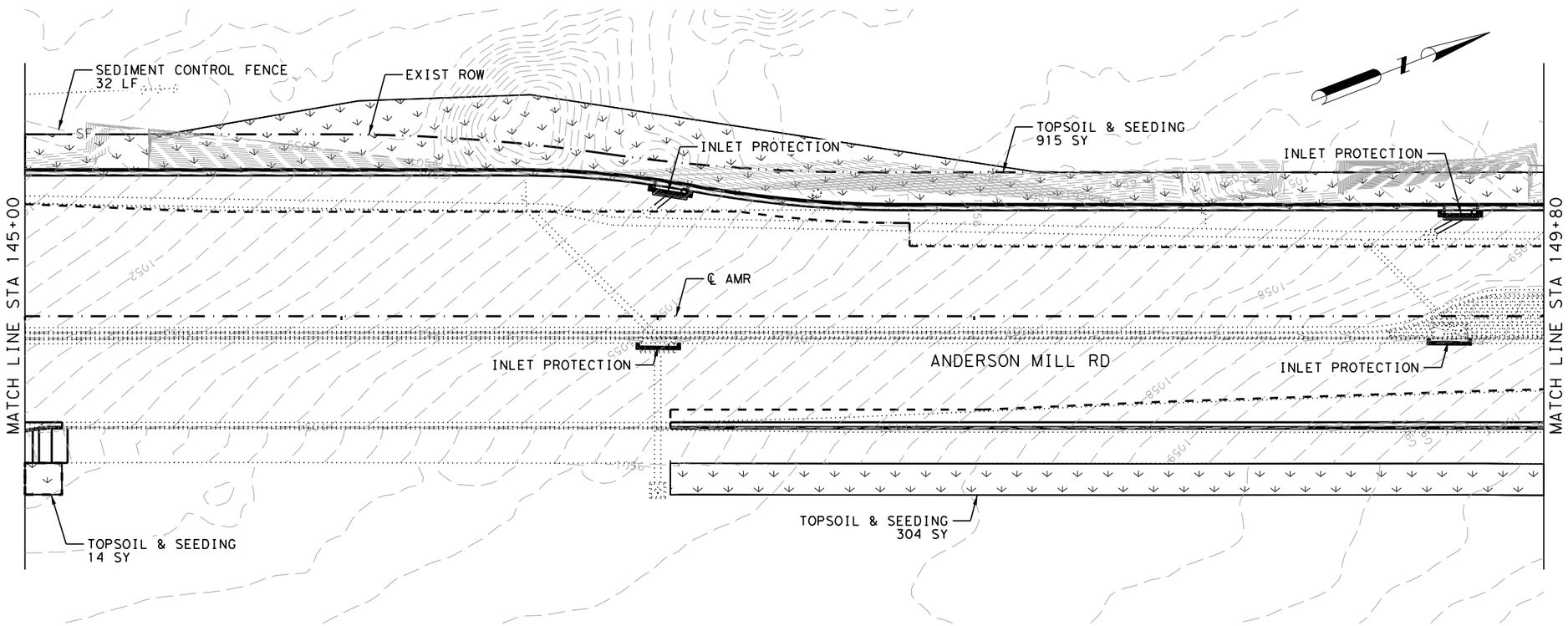


## EROSION CONTROL LEGEND

- INLET PROTECTION
- TOPSOIL & SEEDING
- —SF— SEDIMENT CONTROL FENCE

| NO | DATE | ISSUES AND REVISIONS |
|---|---|---|

STATE OF TEXAS
AUSTIN S. HELTON
124922
LICENSED
PROFESSIONAL ENGINEER
8/5/2022

Kimley»Horn
F-928
10814 JOLLYVILLE ROAD
BLDG. 4, STE 300
AUSTIN, TX 78759
PHONE: 512-418-1771

# EROSION CONTROL LAYOUT

SHEET 3 OF 5
ANDERSON MILL ROAD PHASE 2

CEDAR PARK



FILENAME: AMR+SW3P+03.dgn
PLOTTED: 8/5/2022 4:03:33 PM

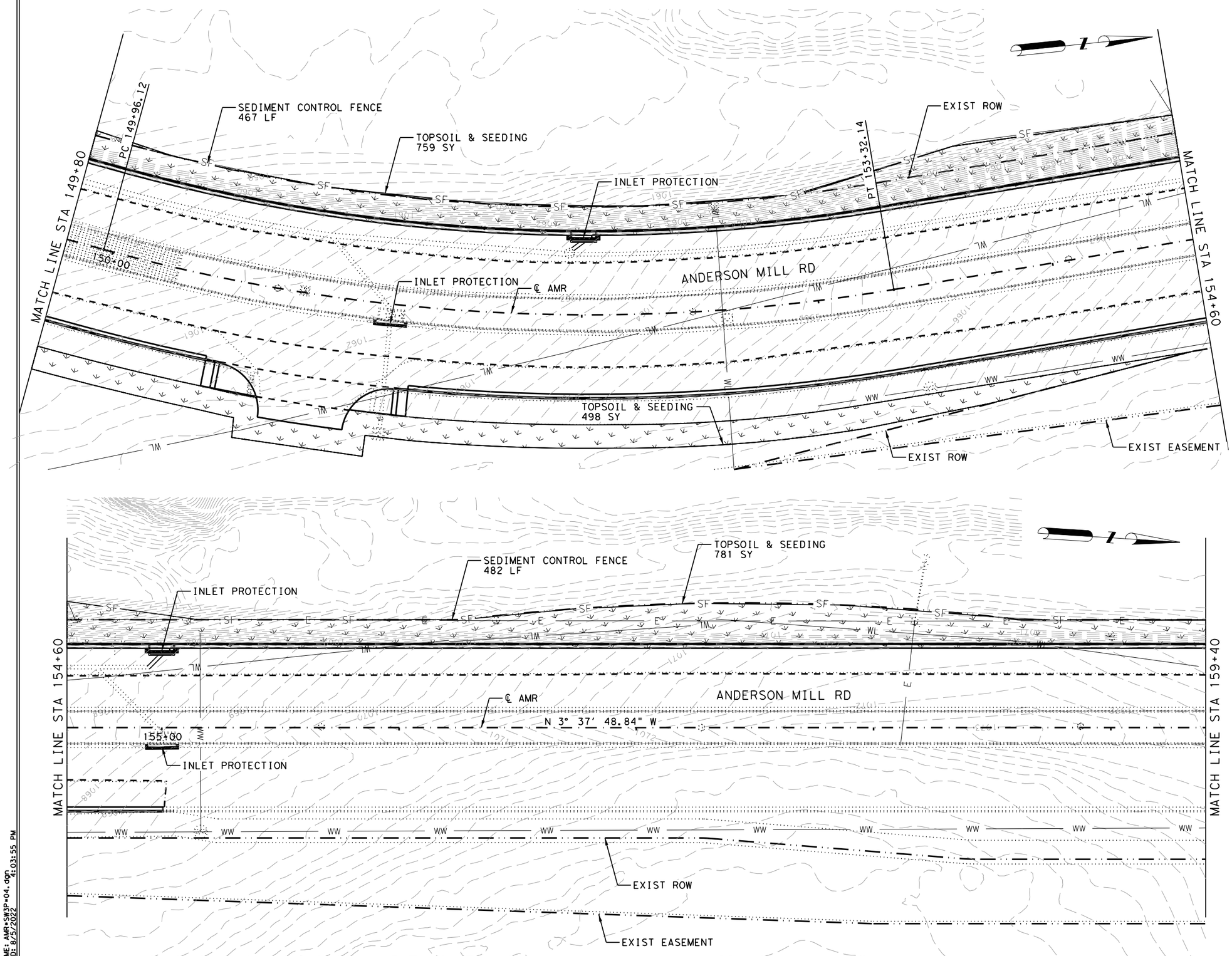


## EROSION CONTROL LEGEND

- INLET PROTECTION
- TOPSOIL & SEEDING
- —SF— SEDIMENT CONTROL FENCE

| NO | DATE | ISSUES AND REVISIONS |
|---|---|---|

STATE OF TEXAS
AUSTIN S. HELTON
124922
LICENSED
PROFESSIONAL ENGINEER
8/5/2022

Kimley»Horn
F-928
10814 JOLLYVILLE ROAD
BLDG. 4, STE 300
AUSTIN, TX 78759
PHONE: 512-418-1771

# EROSION CONTROL LAYOUT

SHEET 4 OF 5
ANDERSON MILL ROAD PHASE 2

CEDAR PARK



FILENAME: AMR-SW3P-04.dgn
PLOTTED: 8/5/2022 4:03:55 PM

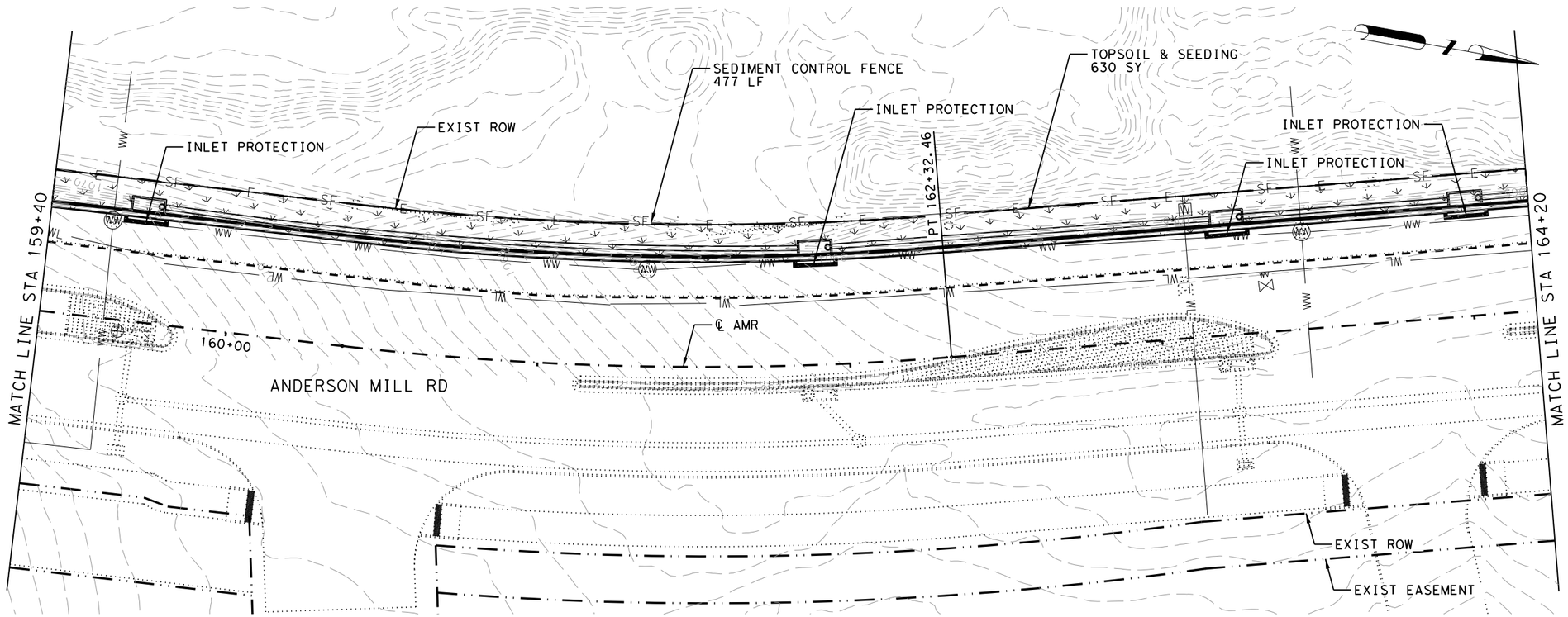


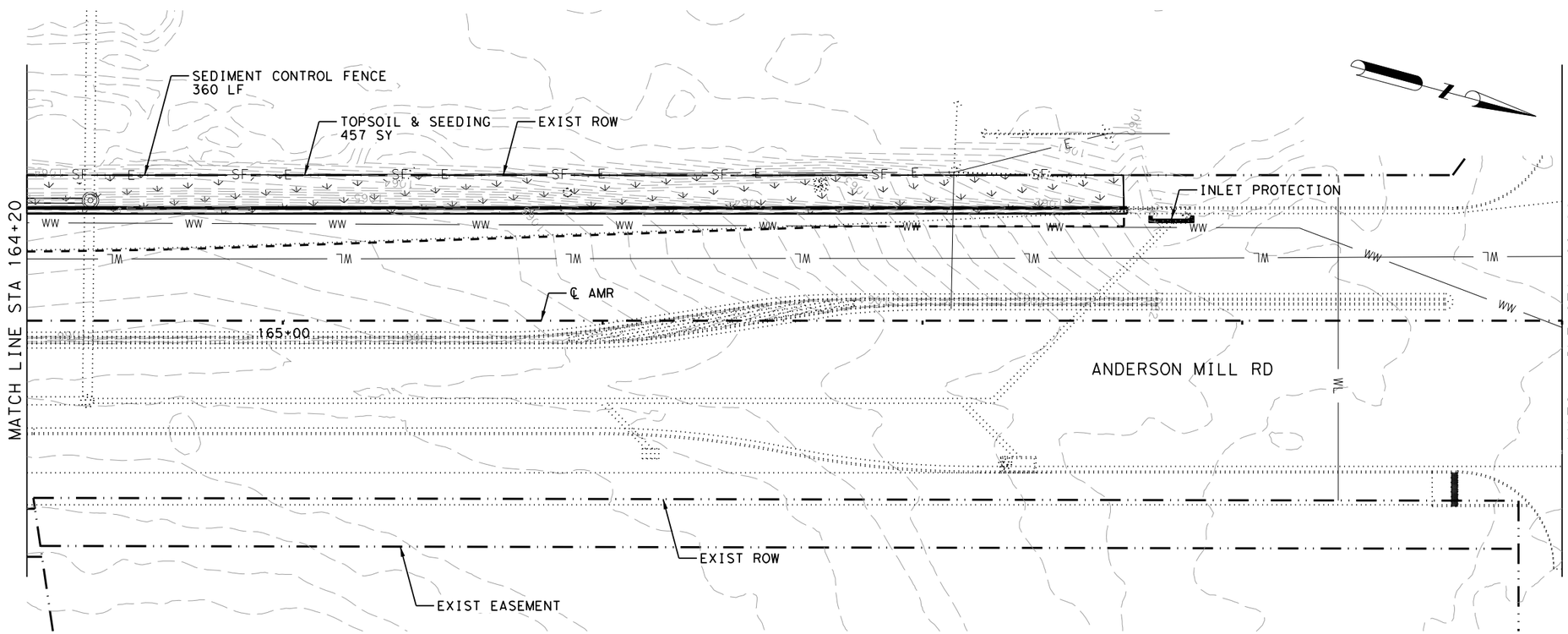


## EROSION CONTROL LEGEND

- INLET PROTECTION
- TOPSOIL & SEEDING
- —SF— SEDIMENT CONTROL FENCE

| NO | DATE | ISSUES AND REVISIONS |
|---|---|---|

STATE OF TEXAS
AUSTIN S. HELTON
124922
LICENSED
PROFESSIONAL ENGINEER
8/5/2022

Kimley»Horn
F-928
10814 JOLLYVILLE ROAD
BLDG. 4, STE 300
AUSTIN, TX 78759
PHONE: 512-418-1771

# EROSION CONTROL LAYOUT

SHEET 5 OF 5
ANDERSON MILL ROAD PHASE 2

CEDAR PARK



FILENAME: AMR-SW3P-05.dgn
PLOTTED: 8/5/2022 4:04:15 PM

DISCLAIMER:
The use of this standard is governed by the "Texas Engineering Practice Act". No warranty of any kind is made by TxDOT for any purpose whatsoever. TxDOT assumes no responsibility for the conversion of this standard to other formats or for incorrect results or damages resulting from its use.

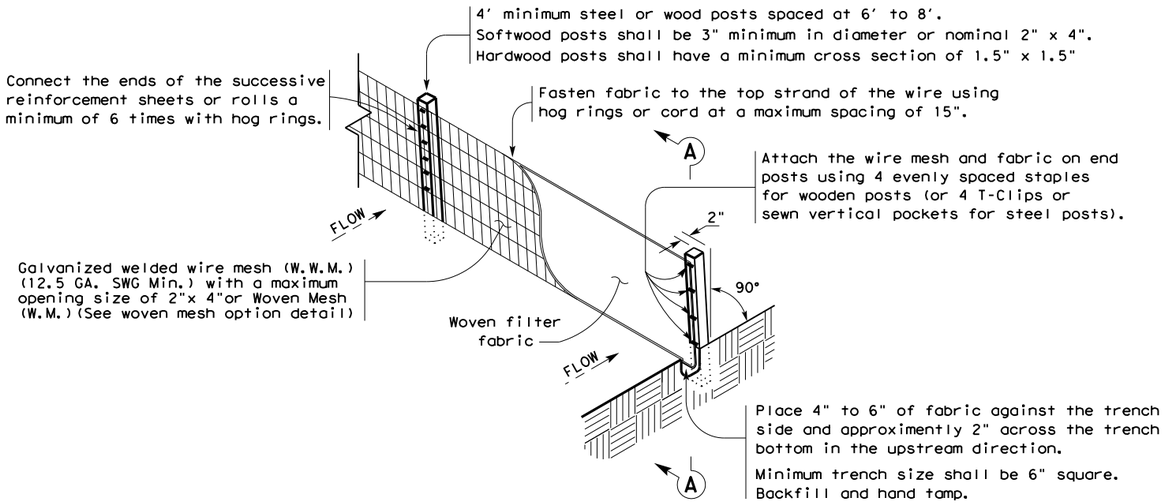


## TEMPORARY SEDIMENT CONTROL FENCE

SCF

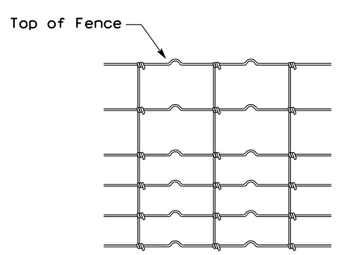


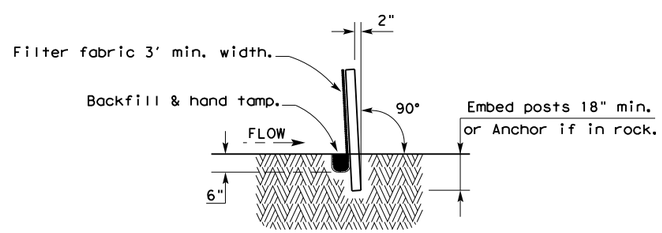


## SECTION A-A

## HINGE JOINT KNOT WOVEN MESH (OPTION) DETAIL

Galvanized hinge joint knot woven mesh (12.5 GA.SWG Min.) requires a minimum of five horizontal wires spaced at a maximum of 12 inches apart and all vertical wires spaced at a maximum of 12 inches apart.

## SEDIMENT CONTROL FENCE USAGE GUIDELINES

A sediment control fence may be constructed near the downstream perimeter of a disturbed area along a contour to intercept sediment from overland runoff. A 2 year storm frequency may be used to calculate the flow rate to be filtered.

Sediment control fence should be sized to filter a maximum flow through rate of 100 GPM/FT$^2$. Sediment control fence is not recommended to control erosion from a drainage area larger than 2 acres.

## LEGEND

Sediment Control Fence

SCF

## GENERAL NOTES

1. Vertical tracking is required on projects where soil distributing activities have occurred unless otherwise approved.
2. Perform vertical tracking on slopes to temporarily stabilize soil.
3. Provide equipment with a track undercarriage capable of producing linear soil impressions measuring a minimum of 12" in length by 2" to 4" in width by 1/2" to 2" in depth.
4. Do not exceed 12" between track impressions.
5. Install continous linear track impressions where the minimum 12" length impressions are perpendicular to the slope or direction of water flow.

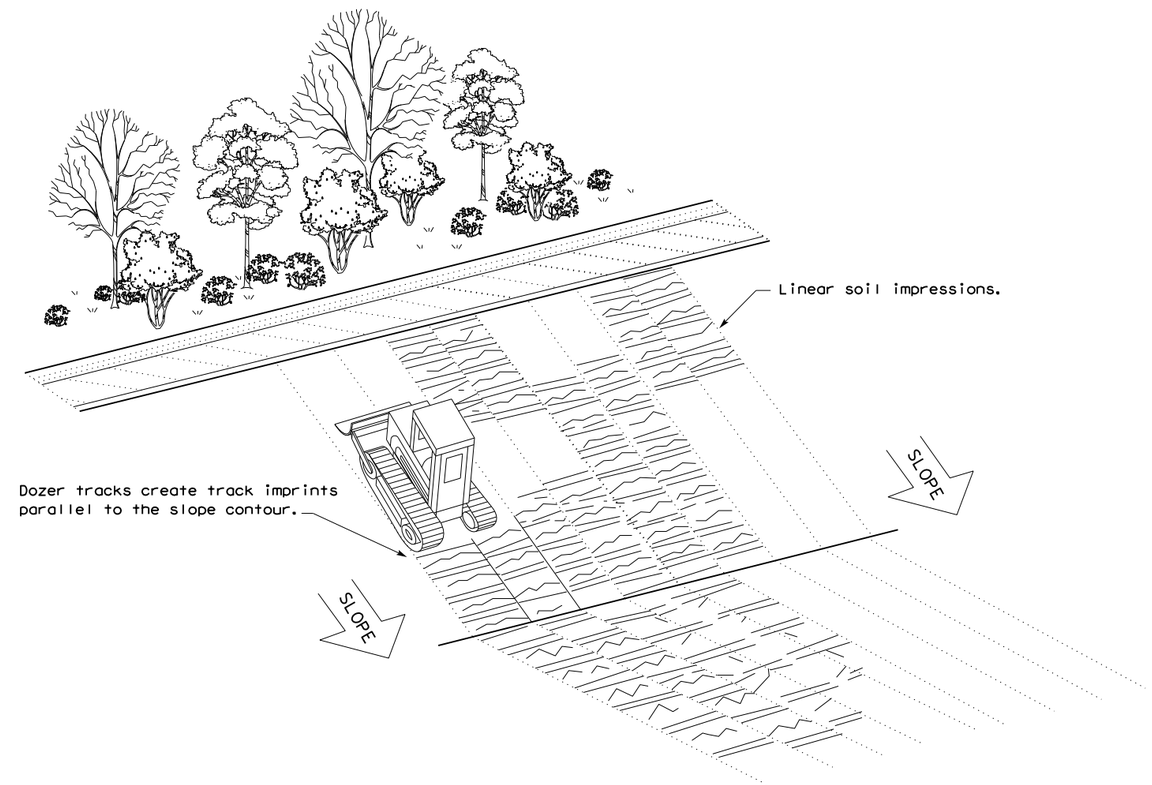


## VERTICAL TRACKING

Texas Department of Transportation

Design Division Standard

# TEMPORARY EROSION, SEDIMENT AND WATER POLLUTION CONTROL MEASURES

## FENCE & VERTICAL TRACKING

## EC(1)-16

| | | | | |
|---|---|---|---|---|
| FILE: ec116 | DN: TxDOT | CK: KM | DW: VP | DN/CK: LS |
| © TxDOT: JULY 2016 | CONT | SECT | JOB | HIGHWAY |
| REVISIONS | | | | |
| | DIST | COUNTY | | SHEET NO. |
| | | | | 141 |

DATE
FILE