CITY OF CEDAR PARK

CEDAR PARK CITY COUNCIL

MAYOR:	JIM PENNIMAN-MORIN
PLACE ONE:	STEPHEN THOMAS
PLACE TWO:	MEL KIRKLAND
PLACE THREE:	ANNE DUFFY
PLACE FOUR:	ERIC BOYCE
PLACE FIVE:	KEVIN HARRIS
PLACE SIX:	HEATHER JEFTS

2

WILLIAMSON COUNTY 1848

CEDAR PARK

ALL RESPONSIBILITY FOR THE ADEQUACY OF THESE PLANS REMAINS WITH THE ENGINEER WHO PREPARED THEM. IN REVIEWING THESE PLANS, THE CITY OF CEDAR PARK MUST RELY ON THE ADEQUACY OF THE WORK OF THE DESIGN ENGINEER.

100% SUBMITTAL

ANDERSON MILL ROAD
CYPRESS CREEK RD. TO ZEPPELIN DRIVE
ROADWAY WIDENING AND DRAINAGE IMPROVEMENTS

Binkley &Barfield,Inc
consulting engineers
Texas Registration Number F-257

SUBMITTED FOR APPROVAL BY:

GREGORY C. CALKINS, P.E.
PROJECT MANAGER — DATE: 06/30/2021

APPROVED FOR CONSTRUCTION BY:

Chris Brickey — CITY OF CEDAR PARK — DATE: 1/10/2023

APPROVED FOR CONSTRUCTION BY:

CITY OF CEDAR PARK — DATE

REVISION APPROVALS

NUMBER	BY	DATE	OK'd	DATE
1		09/12/2022		
2		12/21/2022		

REFER TO ALIGNMENT DATA SHEETS FOR PROJECT SPECIFIC SURVEY BENCHMARKS AND CONTROL POINTS.

STATE OF TEXAS
GREGORY C. CALKINS
111309
LICENSED
PROFESSIONAL ENGINEER

06/30/2021

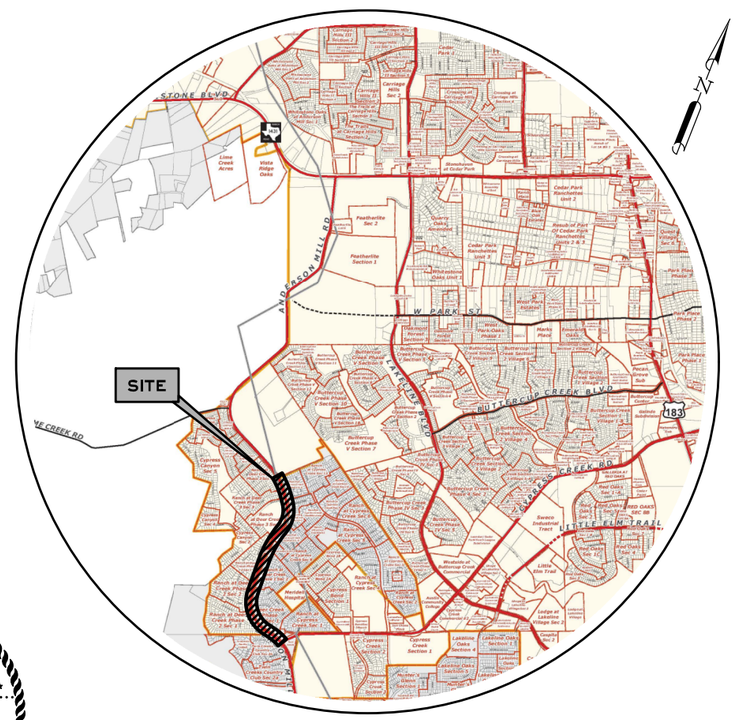

LOCATION MAP
(N.T.S.)

INDEX OF SHEETS

SHEET	DESCRIPTION
1	TITLE SHEET
2	GENERAL NOTES
3-5	TYPICAL SECTIONS
6-11	SUMMARY TABLES
12	TCP GENERAL NOTES & SEQUENCE OF CONSTRUCTION
13-14	TCP TYPICAL SECTIONS
15-16	TRAFFIC CONTROL
17	TCP DETAIL SHEET
18-20	HORIZONTAL ALIGNMENT DATA
21-34	EXISTING CONDITIONS AND REMOVAL PLANS
35-48	PLAN AND PROFILE
49-57	INTERSECTION LAYOUTS
58-66	SIDEWALK AND PEDESTRIAN RAMP PLANS
67	TRAFFIC SIGNAL NOTES
68	EXISTING SIGNAL/REMOVALS
69	PROPOSED SIGNAL LAYOUT
70	TRAFFIC SIGNAL SCHEDULE OF MATERIALS
71-87	SIGNING AND STRIPING PLANS
88-90	DRAINAGE AREA MAP
91-104	DRAINAGE AREAS
105-118	DRAINAGE PLAN SHEETS
119-122	DRAINAGE PROFILES
123-130	HYDRAULIC CALCULATIONS
131-144	EROSION CONTROL PLANS
145-177	STANDARD DETAILS
1-47	CROSS SECTIONS

CITY OF CEDAR PARK, TEXAS
CAPITAL IMPROVEMENT PROJECT GENERAL CONSTRUCTION NOTES
REVISED JUNE 1, 2020

GENERAL NOTES

1. General Contractor shall call for all utility locates prior to any construction. Water & wastewater owned by the City of Cedar Park can be located by calling Texas 811 at 1-800-344-8377. Allow three business days for utility locates by the City of Cedar Park.

2. All construction shall be in accordance with the latest City of Austin Standard Specifications. City of Austin standards shall be used unless otherwise noted.

3. Prior to City acceptance of all Improvements, all graded and disturbed areas inside the right of way between the property line and edge of pavement / back of curb shall be revegetated according to COA specification 602S and 606S; all graded and disturbed areas outside of the right of way shall be re-vegetated in accordance with the City of
Austin Specification Item #604 native mix unless another re-vegetation specification is specifically identified in the plans and/or bid form.

4. The Contractor shall provide the City of Cedar Park copies of all test results prior to acceptance of this project.

5. City, owner, engineer, contractor, representatives of all utility companies, and a representative from the testing lab shall attend pre-construction conference prior to start of construction. The contractor shall schedule the meeting with the City of Cedar Park Engineering Department 48 hours prior to this pre-construction meeting (512-401-5000).

6. Excess soil shall be removed at the contractor's expense. Notify the City of Cedar Park for approval if the disposal site is inside the City's jurisdictional boundaries.

7. Burning is prohibited.

8. No blasting is allowed on this project.

9. Any changes or revisions to these plans must first be submitted to the City by the design engineer for review and written approval. All changes and revisions made to the design of utilities or impacts utilities shall use revision clouds to highlight all revisions or changes with each submittal. Revision triangles shall be used to mark revisions. All
clouds and triangle markers from previous revisions may be removed. Revision information shall be updated in the appropriate areas of the Title Block.

10. The Contractor will reimburse the City for all cost incurred as a result of any damage to any City utility by the Contractor, regardless of these plans.

11. An engineer's concurrence letter and electronic 22"x34" record drawings shall be submitted to the Engineering Department prior to the issuance of final acceptance. The Engineer and Contractor shall verify that all final revisions and changes have been made to record drawings prior to City submittal. Record construction drawings, including
roadway and all utilities, shall be provided to the City in AutoCad ". dwg" files and ".PDF" format on a CD, DVD, or USB Flash Drive. Line weights, line types and text size shall be such that if half-size prints (11"x 17") were produced, the plans would still be legible. All required digital files shall contain a minimum of two (2) control points referenced to the State Plane Grid Coordinate System – Texas Central Zone (4203), in US feet and shall include rotation information and scale factor required to reduce surface coordinates to grid coordinates in US feet.

12. ALL RESPONSIBILITY FOR THE ADEQUACY OF THESE PLANS REMAINS WITH THE ENGINEER WHO PREPARED THEM. IN REVIEWING THESE PLANS, THE CITY OF CEDAR PARK MUST RELY ON THE ADEQUACY OF THE WORK OF THE DESIGN ENGINEER.

13. A traffic control plan sign and sealed by a Licensed Texas Professional Engineer, in accordance with the Texas Manual on Uniform Traffic Control Devices, shall be submitted to the City for review and approval prior to any partial or complete roadway closures.

14. The contractor shall keep the site clean and maintained at all times, to the satisfaction of the City. This project will not be accepted until the site has been cleaned and revegetated to the satisfaction of the City.

15. Signs are not permitted in Public Utility Easements, Set Backs or Drainage Easements.

16. Inspect temporary erosion controls on a daily basis. Adjust the controls and/or remove any sediment buildup as necessary.

17. Contractor will be responsible for keeping roads and drives adjacent to and near the site free from soil, sediment and debris. Contractor will not remove soil, sediment or debris from any area or vehicle by means of water, only shoveling and sweeping will be allowed. Contractor will be responsible for dust control from the site.

18. The Contractor shall be responsible for all damage to private property, which occurred as a result of any portion of this project. Any damage to private property shall be repaired to equal or better condition. The Contractor shall coordinate all repairs to private property with the property owner. Contractor shall pay and/or settle with private property owner for all costs related to any damage. The City will not provide separate pay for repair of any damages, reimbursements or settlements.

19. Contractor shall provide the services of the City's approved SCADA consultant and controls Instrumentation consultant. (When applicable to SCADA) The cost of the consultant and/or any equipment shall be subsidiary to the cost of the project (no separate pay) unless specifically identified on the bid form.

20. The contractor shall make applications to Pedernales Electric Cooperative for electric service if new service is required. The City will assume the service upon acceptance of the project (if required). The contractor will pay for electric power until the meter is transferred to the City of Cedar Park. Impact fees and Application Fees required by PEC will be the responsibility of the Contractor unless specifically identified in the contract.

21. The contractor shall provide combination locks for all gates, hatches, vaults, and MCC boxes. Each lock shall be pre-approved and set to the City's requirements. (No separate pay)

22. All work on these plans shall be performed. Pay for work shown on these plans, which are not identified in the contract, shall be considered incidental to the items specifically identified for payment.

23. The contractor shall provide a competent and qualified superintendent to supervise all work. The superintendent shall be present during all construction activities.

24. Any survey monuments damaged or moved as a result of this project shall be replaced to equal or better condition. A Texas Registered Professional Land Surveyor shall oversee the replacement and certify the replacement for its intended use. No separate pay will be provided.

25. Adequate drainage conditions, in accordance with the City of Austin Drainage Criteria Manual, shall be maintained at all times.

26. Any tree removed or damaged by this project, which is not specifically identified to be removed by the plans, will be replaced according to the requirements of the City of Cedar Park Code of Ordinances. No separate pay will be provided.

27. The contractor shall uncover all utilities within the limits of construction and verify their horizontal and vertical location prior to any construction activities. The contractor shall notify the City and the Engineer, IN WRITING, of any conflicts prior to any other construction including but not limited to exact locations of conflicts with proposed or existing utilities. No additional pay unless specifically identified for payment in the contract documents. The contractor shall also make his own sub-surface investigation prior to bid.

28. Only stainless steel casing spacers are allowed in encasement pipe(s).

29. No separate pay will be given to de-water trenches or other excavated areas.

30. Soil material, of sufficient organic content, imported for re-vegetation of disturbed areas shall be approved by the Engineering Department prior to placement. A sample (submittal) is required. Sandy-loam and/or soils with high clay content will not be accepted.

31. The contractor shall perform pumping stations and/or lift station start-up independently: prior to requesting witness or acceptance by the City. When a final startup fails to be complete and acceptable and when City personnel are present at start-up, each additional start-up will be charged to the contractor, as liquidated damages,
$500.00 per additional meeting.

32. Shutout of any customers of the City's utility due to tie-ins shall only be scheduled for nighttime work unless approved by the Public Works Department. The City's field representative shall coordinate and inspect all nighttime shutouts and tie-ins. The contractor shall request shutouts two weeks in advance. Shutouts will only be allowed
In the following times and are subject to approval by the City: 10 PM - 6 AM; beginning on Tuesday, Wednesday or Thursday night(s). No extra time will be granted to the contract for unscheduled work in the time period allowed or due to requests outside the approved time periods.

33. All construction and construction related activities shall be performed Monday thru Friday from 7:00 A.M. to 6:00 P.M. However, construction activities within five hundred feet (500') of a dwelling or dwelling unit shall be performed between the hours of 8:00 a.m. and 6:00 p.m. Otherwise all construction and construction related activities shall conform to City of Cedar Park Code of Ordinances, specifically ARTICLE 8.08.

34. Approval for construction activities performed on Owner's Holidays, and/or Saturdays, outside of Monday through Friday 8 am to 5 pm, or in excess of 8 hours per day shall be obtained in writing 48 hours in advance, and inspection fees at 1.5 times the hourly inspection rate shall be billed directly to the contractor. There shall be no construction or construction related activities performed on Sunday. The City reserves the right to require the contractor to uncover all work performed without City inspection.

35. Temporary rock crushing operations are not allowed. All sources for flexible base material are required to be approved by the City. Prior to base placement all current triaxial test reports for the proposed stockpiles are to be submitted to the City's project representative for review and approval.

36. There shall be no water or wastewater appurtenances, including but not limited to, valves, fittings, meters, clean-outs, manholes, or vaults in any driveway, sidewalk, traffic or pedestrian area.

37. Sidewalks shall not use curb inlets as a partial walking surface. Sidewalks shall not use traffic control boxes, meter or check valve vaults, communication vaults, or other buried or partially buried infrastructure as a vehicular or pedestrian surface.

STREET NOTES:

1. No trenching of compacted base will be allowed. A penalty and/or fine may be imposed to the general contractor if trenching of compacted base occurs without City approval, regardless of who performed the trenching.

2. All sidewalks shall comply with the Americans With Disabilities Act and the Texas Architectural Barriers Act. The City of Cedar Park has NOT reviewed these plans for compliance with the Americans With Disabilities Act, Texas Architectural Barriers Act, or any other accessibility legislation, and does not warranty or approve these plans for any accessibility standards. However, prior to project acceptance, the Contractor shall submit to the COCP documentation that the project was Inspected by the Texas Department of Licensing and Regulation or a Registered Accessibility Specialist and the project is in compliance with the requirements of the Texas Architectural Barriers Act.

3. Street barricades shall be installed on all dead end streets and as necessary during construction to maintain job safety.

4. Any damage caused to existing pavement, curbs, sidewalks, ramps, etc., shall be repaired by the contractor to the satisfaction of the City prior to acceptance of this project.

5. Density testing of compacted subgrade material, first course and second course compacted base, shall be made at 500 foot intervals. Any failed tests will be re-tested at the expense of the contractor.

6. The contractor shall coordinate with the City's field representative 48 hours prior to scheduled density testing. The City's field representative shall witness all testing.

7. The City will notify the contractor of the name, contact and phone number of the testing laboratory for this job. The City will pay for all tests that pass the specifications the first time. The CONTRACTOR shall schedule the testing with the laboratory and notify the City's field representative of the time and location of all tests.

8. Traffic control signs and pavement markings in accordance with the Texas Manual on Uniform Traffic Control Devices to be installed as directed by the City of Cedar Park prior to City acceptance of this project.

9. Slope of natural ground adjacent to the right-of-way shall not exceed 3:1. If a 3:1 slope is not possible, a retaining wall or some other form of slope protection approved by the City shall be placed in a location acceptable to the City.

10. The City, engineer, contractor, and a representative from the asphalt-testing lab shall attend a pre-paving conference prior to the start of HMAC paving. The contractor shall give the City's field representative 48 hours notice prior to this meeting.

11. Re-testing of the asphalt pavement shall be limited to one retest per project. Failed tests shall be the financial responsibility of the contractor.

12. All pavement markings and signage shall comply with MUTCD standards.

13. Pavement markings shall be thermoplastic unless otherwise noted.

14. Street name signs shall be provided and installed in accordance with Street Name Sign Pole detail provided by the City of Cedar Park.

15. All street name signs shall be high intensity retro grade.

16. A minimum of seven days of cure time is required for HMAC prior to the introduction of vehicular traffic to any streets.

17. No Fencing or Wall is allowed to be constructed so that it obstructs the sight lines of drivers from an intersecting public roadway or from an intersecting private driveway. Sight lines are to be maintained as described in City Code Section 14.05.007. Installing a fence or wall which does not comply with the City's Sight Distance Requirements or Fencing Regulations is a violation of the City's Ordinance and may be punishable pursuant to Section 1.01.009 of City Code.

18. Utility service boxes or other utility facilities shall not be installed within areas determined to be required sight lines of two intersecting public streets or within sight lines of a private driveway. Sight lines are to be maintained compliant with Table 1-1 of the Austin Transportation Criteria Manual. Utilities determined by the Director of Engineering to be placed within required sight lines may be required to be relocated at the expense of the contractor prior to the City issuing a Certificate of Occupancy or prior to the City's Acceptance of the Project Improvements.

19. All lane closures shall occur only between the hours of 9 AM and 4 PM. Any night time lane closures require approval by the Director of Engineering and shall occur between the hours of 8 PM and 6 AM. Lane closures observed by City during the peak hours of 6 AM to 9 AM, or 4 PM to 8 PM will be subject to fine per Chapter 1 of City Ordinance, and/or subsequent issuance of Work Stoppage.

20. Improvements that include reconstruction of an existing Type II driveway shall be done in a manner which retains operations of not less than half of the driveway at all times. Full closure of such driveway can be considered with written authorization retained by the Contractor from the property owner(s) or access easement right holder(s) of the driveway allowing full closure of the driveway.

21. Trees must not overhang within 10' vertically of a sidewalk, or 18' vertically of a
roadway or driveway.

WASTEWATER NOTES:

1. Refer to the City of Cedar Park Public Works Utility Policy and Specifications manual.

2. The contractor, with City approval, shall raise manhole frames and covers and water valve boxes to finished pavement grade at the contractor's expense. All utility adjustments shall be completed prior to final paving construction.

3. The location of any existing utility lines shown on these plans may not be accurate. Any damage to existing utility lines, both known and unknown, shall be repaired at the expense of the contractor. The contractor shall make his own sub-surface investigation prior to bid. The contractor shall uncover all utilities within the limits of construction and verify their horizontal and vertical location prior to any construction activities.

4. All iron pipe and fittings shall be wrapped with at least 8-mil polyethylene wrap, according to the COA Specification. All metallic pipe shall be cathodically protected.

5. All water mains, wastewater mains and service lines shall meet City of Austin minimum cover specifications. All streets are to be cut to subgrade prior to installation of water mains.

6. Where 48-inches of cover below subgrade cannot be achieved for wastewater service lines alternate materials shall be used. A minimum of 36-inches of cover below subgrade shall be achieved. Any wastewater service line with cover between 36-inch and 48-inches shall be SDR-26 PVC pressure pipe.

7. Gasketed PVC sewer main fittings shall be used to connect SDR-35 PVC to SDR-26 PVC pressure pipe or C-900.

8. SDR-35 WW is not allowed.

9. Forcemains shall be epoxy lined ductile iron.

10. All sanitary sewers, excluding service lines, shall be mandrel tested per TCEQ (Texas Commission on Environmental Quality) criteria. A mandrel test will not be performed until backfill has been in place for a minimum of 30 days

11. All sanitary sewers, including service lines, shall be air tested per City of Austin Standard Specifications.

12. Density testing of compacted backfill shall be made at a rate of one test per two foot lifts per 500 feet of installed pipe, unless specified otherwise by the City

13. City to be given 48 hours notice prior to all testing of water and wastewater lines. City inspection is required for all testing of water and wastewater lines.

14. Where a water or wastewater line crosses above (or below) a storm sewer structure and the bottom (or top) of the pipe is within 18 inches of the top (or bottom) of the utility structure, the pipe shall be encased with concrete for a distance of at least 1 ft. on either side of the ditch line of the utility structure or the storm sewer. Concrete encasement will not be required for ductile iron (thickness Class 50), AWWA C-900 (SDR14) 200 psi rated PVC in sizes to 12 inches or AWWA C-905 (SDR-25) 165 psi rated PVC in sizes larger than 12 inches. Concrete encasement shall conform to C.O.A. standard detail 505-1.

15. The allowable (maximum) adjustment for a manhole shall be 12" (inches) or less.

16. Where a sewer line crosses a water line, the sewer line shall be one 20 ft. joint of 150 psi (or greater if specified in the plans) rated PVC centered on crossing.

17. All manhole and inlet covers shall read "City of Cedar Park".

18. All manhole lids outside the pavement shall be bolted. Security bolts per City specifications shall be used.

19. Contractor to notify City of Cedar Park 48 hours prior to connecting to existing utilities. Inspection of connections to existing utilities is required.

20. All pipe bedding material shall conform to City of Austin Standard Specifications.

21. Unless otherwise specified by the Engineer all concrete is to be Class "A" (5 sack, 3000 psi ~ 28-days), and all reinforcing steel to be ASTM A615 60.

22. All wastewater manholes to be coated with organic materials and procedures listed in City of Austin Qualified Products List No. WW-511 (WW-511A and WW-511B are not allowed unless manhole is being structurally rehabilitated with approval by Public Works). All manholes will be pre-coated or coated AFTER testing.

23. Polybrid Coatings on wastewater manholes will not be allowed without pre-approval from the project manager. Any other manhole coating product appearing on the CoA SPL WW-511 is acceptable and required.

24. All manholes will be vacuum tested only.

25. Tracer tape shall be installed on all water and wastewater mains in accordance with City of Austin Standards regardless of the type of pipe or depth of pipe.

26. Piping in and around lift station valve vaults will be painted and/or coated to the City's specifications.

27. MCC's, junction boxes or any housing for electrical components shall be NEMA 4X stainless steel. Painted metal or any other type of box will not be accepted unless specifically identified in the plans.

28. All wastewater lines 10" and larger shall be Video recorded according to COA 510 at the Contractor's expense. The contractor shall supply two copies to the City's Field Representative. No separate pay unless noted on the bid form.

29. Calcutta MH rings are not allowed in the TX DOT ROW.

30. All pressure pipe shall have mechanical restraint and concrete thrust blocking at all
valves, bends, tees, plugs, and other fittings.

WATER NOTES:

1. Refer to the City of Cedar Park Public Works Utility Policy and Specifications manual.

2. The top of valve stems shall be at least 18", and no more than 36", below finished grade. Valve stem risers shall be welded on each end to the City's satisfaction.

3. Fire hydrant leads to be ductile iron, Class 350, and installed per City of Austin standard specifications and City of Cedar Park detail.

4. The contractor shall provide cuts for all water lines and fire hydrant bury lines in accordance with the contract.

5. Approved 5 ¼" fire hydrants:
- American Flow Control, B84B
- Mueller Company, Super Centurion 250
- Clow Medallion Hydrant
- American AVK Company, Series 27 (Model 2780)
- All fire hydrants must meet City of Cedar Park thread specifications (National Thread)
- Blue reflector markers shall be located on the centerline of the pavement across from all fire hydrants. Pavement

markers at intersections shall be four-sided.

6. Should a Tapping Saddle be approved by Public Works, the saddle shall be Smith-Blair 662 Stainless Steel Tapping Sleeves with all stainless hardware, or approved equal. Requests for alternate providers shall be made to the City of Cedar Park Public Works. No tap exceeding 2" in diameter will be approved.

7. All water lines, including service lines, shall be pressure and leak tested per City of Austin Standard Specifications and witnessed by the City of Cedar Park representative. All failed tests shall be the fiscal responsibility of the contractor, and the contractor may be required to re-test lines if the testing is not witnessed by the City. Contractor must notify the City of Cedar Park 48 hours prior to any testing.

8. All water lines shall be sterilized and bacteriologically tested in accordance with City of Austin Standards. The contractor is responsible for sterilization and the City of Cedar Park is responsible for submitting bacteriological samples to the State unless otherwise approved by the Public Works department. Public Works will require a contractor specialized in disinfection for large diameter lines or critical infrastructure, subsidiary to pipe installation.

9. All water valve risers not in pavement shall be set in concrete in accordance with the City's specifications and details. The standard detail is available on the City's web site.

10. Density testing of compacted backfill shall be made at a rate of one test per two foot lifts per 500 feet of installed pipe unless otherwise approved by the Engineering Department.

11. Contractor to obtain a water meter from the City of Cedar Park for any water that may be required during construction. (512-401-5000)

12. All water meter boxes shall be Ford Gulf Meter Box with locking lid.
- SINGLE G-148-233
- DUAL DG-148-243
- 1" METER YL111 - 444
- 1 ½" – 2" METER 1730-R (LID) & 1730-12 (BOX)/ACCEPTABLE BOXES FOR THIS SIZE OF METER

13. Manhole frames and covers and water valve boxes shall be raised to finished pavement grade at the contractor's expense with City inspection. All utility adjustments shall be completed prior to final paving construction.

14. The location of any existing utility lines shown on these plans is the best available and may not be totally accurate. Any damage to existing utility lines, both known and unknown shall be repaired at the expense of the contractor. The Engineer and/or the City make no guarantee or warranty to the accuracy of these plans. The contractor shall make his own sub-surface investigation prior to bid. The contractor shall uncover all utilities within the limits of construction and verify their horizontal and vertical location prior to any construction activities.

15. All iron pipe and fittings shall be wrapped with at least 8-mil polyethylene wrap in accordance with the COA specification. All metallic pipe shall be cathodically protected.

16. All water mains, wastewater mains and service lines shall meet City of Austin Specifications for minimum cover requirements. All streets are to be cut to subgrade prior to installation of water mains.

17. City to be given 48 hours notice prior to all testing of water and wastewater lines. City inspection is required for all testing of water and wastewater lines.

18. Where a water or wastewater line crosses above (or below) a storm sewer structure and the bottom (or top) of the pipe is within 18 inches of the top (or bottom) of the utility structure, the pipe shall be encased with concrete for a distance of at least 1 ft. on either side of the ditch line of the utility structure or the storm sewer. Concrete encasement may not be required for ductile iron (thickness Class 50), AWWA C-900 (SDR-14) 200 psi rated PVC in sizes to 12 inches or AWWA C-905 (SDR-25) 165 psi rated PVC in sizes larger than 12 inches. Concrete encasement shall conform to C.O.A. standard detail 505-1. This note does not allow for pipe that would otherwise have a higher maximum operating pressure.

19. Contractor to notify City of Cedar Park 48 hours prior to connecting to existing utilities. Inspection is required.

20. All pipe bedding material shall conform to City of Austin Standard Specifications.

21. Tracer tape shall be installed on all water and wastewater mains regardless of the type of pipe or depth of pipe installed.

22. Unless otherwise specified by the Engineer all concrete is to be Class "A" (5 sack, 3000 psi ~ 28-days), and all reinforcing steel to be ASTM A615 60.

23. The City considers protection of its water system paramount to construction activities. City personnel will operate, or authorize the contractor to operate, all water valves that will pass through the City's potable water. The contractor may not operate any water valve, existing or proposed, that will allow water from the City's water system to flow to a proposed or existing water system without the express consent of the City. Notify the City two business days in advance of any request to operate a water valve. The general contractor may be fined $500 or more, including additional theft of water fines, if a water valve is operated in an unauthorized manner, regardless of who operated the valve.

24. All water valves over 24" in size shall have a by-pass line and valve installed. By-pass valves and lines are subsidiary to the cost of the valve unless specifically identified on the bid form.

25. All water pipe and appurtenances larger than 12" shall have a maximum operating pressure greater than 250 psi unless specifically identified on the bid form.

26. A.Y. McDonald "T" series compression fittings will not be accepted by the City of Cedar Park. Mac-Pak compression fittings, or another type listed on the COA SPL is acceptable.

27. All potable water system components installed after January 4, 2014, shall be "lead free" according to the United States Safe Drinking Water Act. The only components exempt from this requirement are fire hydrants. Components that are not clearly identified by the manufacturer as meeting this requirement by marking, or on the product packaging, or by pre-approved submittal, will be rejected for use. A NSF certification will be adequate if the certification has not expired as of January 4, 2014 and remains unexpired at the time of construction.

28. All pressure pipe shall have mechanical restraint and concrete thrust blocking at all valves, bends, tees, plugs, and other fittings.

STORM SEWER NOTES:

1. The contractor with City inspection shall raise manhole frames and covers and water valve boxes to finished pavement grade at the contractor's expense. All utility adjustments shall be completed prior to final paving construction. The contractor shall backfill around manholes and junction boxes with Class A concrete. All utility adjustments shall be completed prior to final paving construction.

2. All manhole lids shall be 32" or larger, unless expressly approved in writing by the Public Works Department. All lids outside the pavement will be bolted.

3. The location of any existing utility lines shown on these plans is the best available and may not be totally accurate. Any damage to existing utility lines, both known and unknown, shall be repaired at the expense of the contractor.

4. Corrugated Metal Pipe is not permitted.

5. All manhole and inlet covers shall read "City of Cedar Park ".

6. Contractor to notify City of Cedar Park 48 hours prior to connecting to existing utilities.

7. All pipe bedding material shall conform to City of Austin Standard Specifications.

8. Unless otherwise specified by the Engineer all concrete is to be Class "A" (5 sack, 3000 psi ~ 28-days), and all reinforcing steel to be ASTM A615 60.

9. Contractor to install and maintain geo-textile fabric barrier (inlet protection) around storm sewer leads and inlets to prevent silt and other material from entering the storm sewer collection system.

10. All curb inlets shall have an Alimetek 4" Disc "No Dumping Drains to Waterway" marker.

PROJECT SPECIFIC NOTES:

1. CONTRACTOR SHALL FIELD VERIFY ANY CONFLICTS WITH EXISTING UTILITIES, IRRIGATION LINES, ETC. BEFORE CONSTRUCTION.
2. CONTRACTOR SHALL FIELD VERIFY ALL EXISTING ELEVATIONS BEFORE CONSTRUCTION.
3. CONTRACTOR SHALL NOTIFY ENGINEER OF ANY CONFLICTS WITH THE PROPOSED PLAN BEFORE CONSTRUCTION.
4. CONTRACTOR SHALL REFER TO CITY STANDARD SPECIFICATIONS FOR FURTHER DETAILS OF SPECIFIC CONSTRUCTION ITEMS.
5. REFER TO GEOTECHNICAL ENGINEERING REPORT FOR DETAILS OF EXISTING AND PROPOSED SOIL CONDITIONS.
6. CONTRACTOR SHALL REPAIR ANY DAMAGE MADE TO EXISTING PAVEMENT AND/OR UTILITIES THAT OCCUR AS A RESULT OF THE CONSTRUCTION ACTIVITY. REPAIRS SHALL RETURN DAMAGED ITEMS TO EXISTING OR BETTER CONDITIONS.
7. ALL MANHOLES AND UTILITY APPURTENANCES IN PAVEMENT ARE TO BE DESIGNED FOR HS-20 TRAFFIC LOADS PER CITY STANDARDS.
8. CONTRACTOR SHALL MAINTAIN ACCESS TO ALL PROPERTIES AT ALL TIMES.
9. CONTRACTOR SHALL COORDINATE WITH PROPERTY OWNERS AS NECESSARY DURING CONSTRUCTION.
10. WORK HOURS SHALL BE FROM 7:00 A.M.-7:00 P.M. THERE SHALL BE NO CONSTRUCTION OR CONSTRUCTION VEHICLES IN TRAVEL LANES, OR ANY OTHER DISRUPTION OF TRAFFIC BEFORE 9:00 A.M. OR AFTER 4:00 P.M.
11. ANY LANE CLOSURES SHALL BE COORDINATED WITH THE CITY AT LEAST 5 DAYS IN ADVANCE.
12. THE CITY SHALL BE NOTIFIED AT LEAST 48 HOURS IN ADVANCE OF ANY WEEKEND WORK.
13. IF DISTURBED AREA IS NOT TO BE WORKED ON FOR MORE THAN 14 DAYS, AT ANY POINT DURING CONSTRUCTION, DISTURBED AREA NEEDS TO BE STABILIZED BY REVEGETATION, MULCH, TARP, OR REVEGETATION MATTING.

NUMBER	DATE	REVISION	APPROVED

STATE OF TEXAS
GREGORY C. CALKINS
111309
LICENSED
PROFESSIONAL ENGINEER
9/28/2020

Binkley & Barfield, Inc
consulting engineers
Texas Registration Number F-257

CEDAR PARK

ANDERSON MILL ROAD
GENERAL NOTES

DESIGN BY:	GCC	SCALE:	NTS
DRAWN BY:	DSH		
CHECKED BY:	BMB	SHEET:	1 OF 1
APPROVED BY:	BDR		
PROJECT NO:	156402	PAGE:	2
DATE:	9/28/2020		

9/28/2020
1:15:10 PM
T:\156402*Anderson*Mill*Road\CADD\SHEETS\GNN01*AM*01.dgn

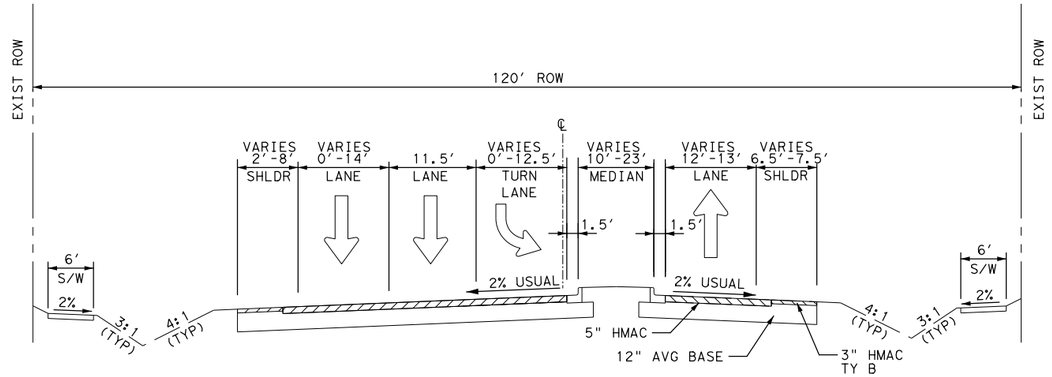

EXISTING ANDERSON MILL TYPICAL SECTION

STA 11+22.83 TO 14+72.76

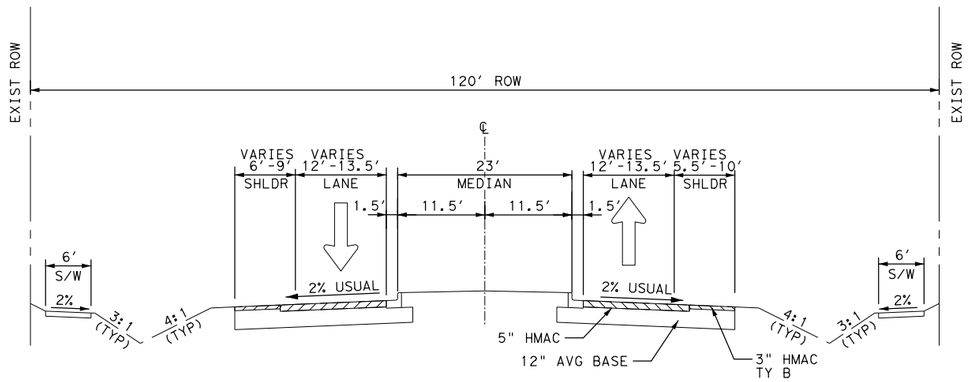

EXISTING ANDERSON MILL TYPICAL SECTION

STA 14+72.76 TO 17+01.85
STA 19+73.46 TO 22+64.38
STA 25+46.19 TO 39+80.10
STA 45+85.50 TO 60+88.10
STA 66+77.85 TO 70+96.41

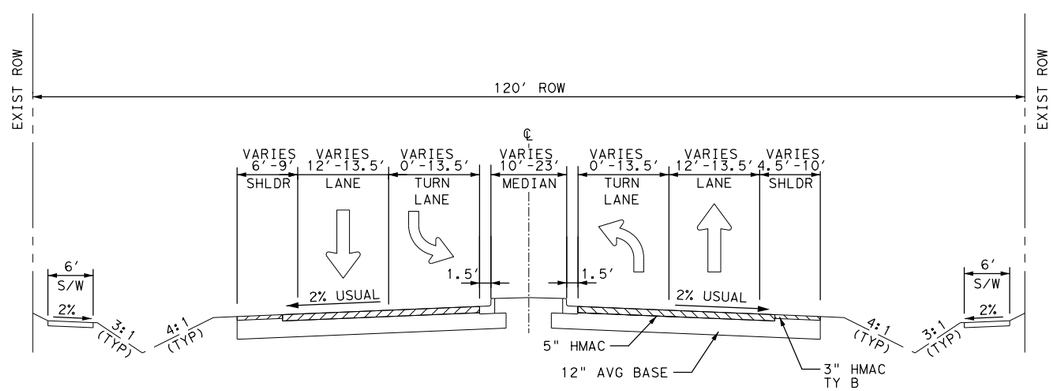

EXISTING ANDERSON MILL TYPICAL SECTION

STA 17+01.85 TO 19+73.46
STA 22+64.38 TO 25+46.19
STA 39.80.10 TO 45+85.50
STA 60+88.10 TO 66+77.85

NUMBER	DATE	REVISION	APPROVED

STATE OF TEXAS
GREGORY C. CALKINS
111309
LICENSED
PROFESSIONAL ENGINEER
9/28/2020

Binkley & Barfield, Inc
consulting engineers
Texas Registration Number F-257

CEDAR PARK

ANDERSON MILL ROAD
TYPICAL SECTIONS

DESIGN BY:	GCC	SCALE:	NTS
DRAWN BY:	DSH		
CHECKED BY:	BMB		
APPROVED BY:	BDR	SHEET:	1 OF 3
PROJECT NO:	156402		
DATE:	9/28/2020	PAGE:	3

9/28/2020
1:15:15 PM
T:\156402*Anderson*Mill*Road\CADD\SHEETS\GNPT1*AM*01.dgn

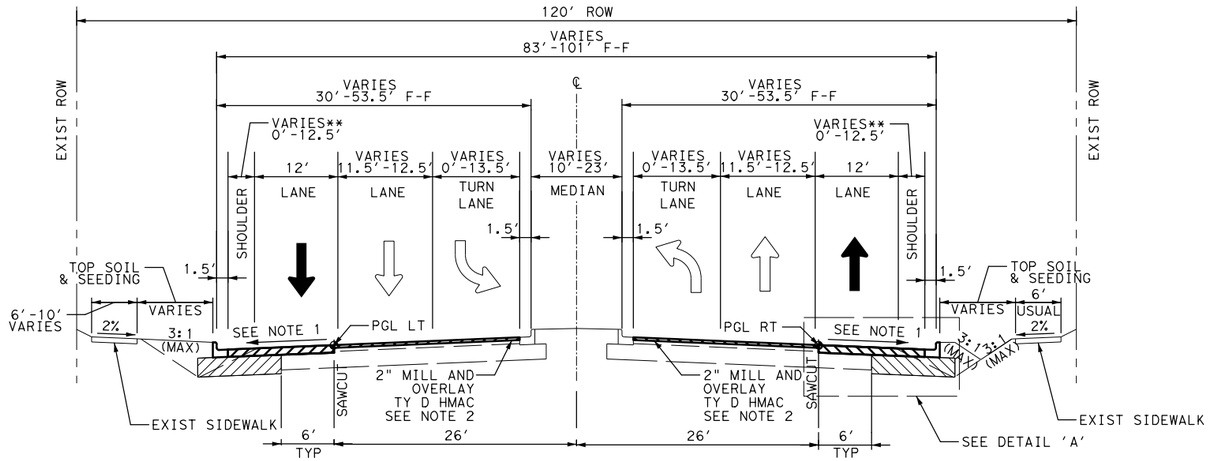

PROPOSED ANDERSON MILL TYPICAL SECTION

STA 11+22.83 TO 14+55.96
STA 17+01.85 TO 25+46.19
STA 29+58.15 TO 32+25.37
STA 36+46.74 TO 40+24.44
STA 47+78.65 TO 53+21.98
STA 57+20.26 TO 59+79.62
STA 67+92.81 TO 70+96.41

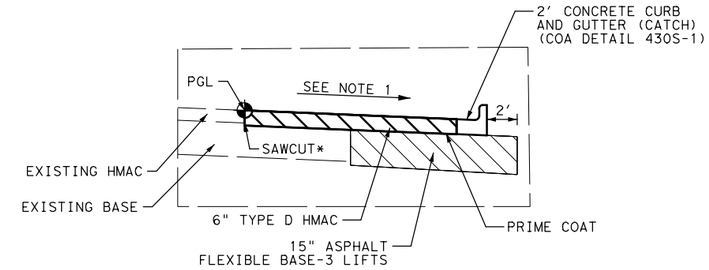

DETAIL 'A'

NOT TO SCALE

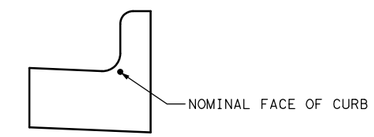

DETAIL 'B'

NOT TO SCALE

NOTES:

1. REFER TO PAVEMENT CROSS SLOPE SUMMARY TABLE FOR ADDITIONAL INFORMATION.
2. BID ALTERNATIVE.

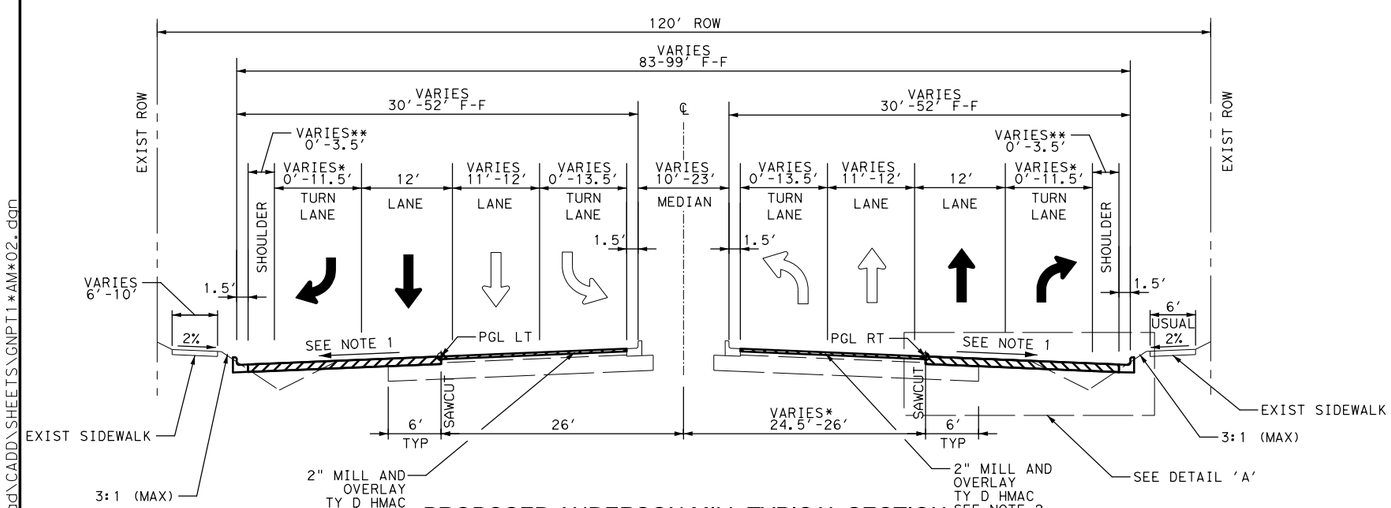

PROPOSED ANDERSON MILL TYPICAL SECTION

STA 14+55.96 TO 17+01.85
STA 25+46.19 TO 29+58.15
STA 32+25.37 TO 36+46.74
STA 40+24.44 TO 47+78.65
STA 53+21.98 TO 57+20.26
STA 59+79.62 TO 67+92.81

* REFER TO THE ROADWAY PLAN AND PROILE SHEETS FOR ADDITIONAL INFORMATION RELATED TO THE TURN LANE AND SAWCUT LINE CONFIGURATIONS.

** REFER TO THE SIGNING AND STRIPING PLANS FOR ADDITIONAL INFORMATION RELATED TO SHOULDER AND LANE STRIPING.

NUMBER	DATE	REVISION	APPROVED

STATE OF TEXAS
GREGORY C. CALKINS
111309
LICENSED
PROFESSIONAL ENGINEER
6/30/2021

Binkley & Barfield, Inc
consulting engineers
Texas Registration Number F-257

CEDAR PARK

ANDERSON MILL ROAD
TYPICAL SECTIONS

DESIGN BY:	GCC	SCALE:	NTS
DRAWN BY:	DSH		
CHECKED BY:	BMB		
APPROVED BY:	BDR	SHEET:	2 OF 3
PROJECT NO:	156402		
DATE:	6/30/2021	PAGE:	4

6/30/2021
3:33:19 PM
T:\156402*Anderson*Mill*Road\CADD\SHEETS\GNPT1*AM*02.dgn

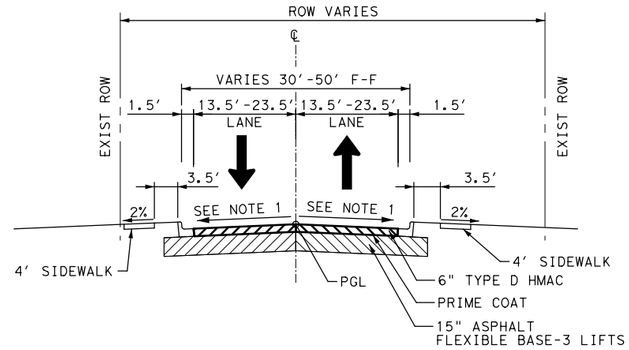

PROPOSED TWO LANE TYPICAL SECTION

DRIFTING LEAF DRIVE	STA 100+41.51 TO 100+76.19
GRAND FALLS DRIVE W	STA 100+62.79 TO 101+04.20
SHADY CREEK TRAIL	STA 100+41.53 TO 100+74.18
RHAPSODY RIDGE DRIVE	STA 100+41.50 TO 101+03.99
ZEPPELIN DRIVE W	STA 101+41.38 TO 101+74.84
ZEPPELIN DRIVE E	STA 100+41.50 TO 100+74.51

NOTES:

1. REFER TO INTERSECTION LAYOUTS FOR ADDITIONAL INFORMATION.

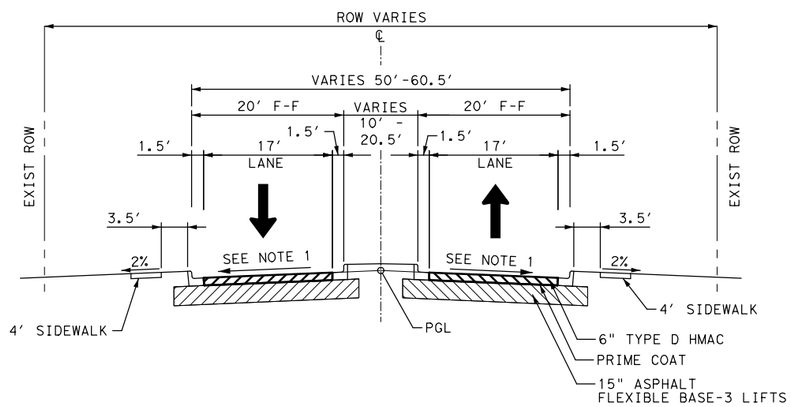

PROPOSED TWO LANE DIVIDED TYPICAL SECTION

QUIET MOON TRAIL	STA 104+68.10 TO 105+08.21
PASSIONFLOWER PASS	STA 101+54.94 TO 101+88.12
GRAND FALLS DRIVE E	STA 100+41.57 TO 101+12.26
SHADY CREEK TRAIL	STA 100+41.53 TO 100+74.18

LEFT PAVEMENT CROSS SLOPE SUMMARY

BEGIN STA	END STA	THRU LANE SLOPE (L1)	TURN LANE SLOPE (L2)
BEGIN	25+93.09	*	*
25+93.09	29+58.15	*	-2.00%
29+58.15	32+80.94	*	*
32+80.94	36+46.74	*	-2.00%
36+46.74	43+20.56	*	*
43+20.56	46+89.19	*	-2.00%
46+89.19	64+42.13	*	*
64+42.13	68+21.86	*	-2.00%
68+21.86	END	*	*

*STATION INTERVALS WITHOUT CROSS SLOPE INFORMATION SHALL MATCH EXISTING CROSS SLOPES OR REFER TO INTERSECTION LAYOUTS

RIGHT PAVEMENT CROSS SLOPE SUMMARY

BEGIN STA	END STA	THRU LANE SLOPE (R1)	TURN LANE SLOPE (R2)
BEGIN	14+40.00	*	*
14+40.00	16+53.56	*	-4.00%
16+53.56	39+80.00	*	*
39+80.00	42+34.35	*	-2.50%
42+34.35	43+20.00	*	*
43+20.00	47+39.57	*	-3.00%
47+39.57	52+65.00	*	*
52+65.00	53+15.00	TRANSITION	-3.00%
53+15.00	56+83.31	-1.50%	-3.00%
56+83.31	59+40.00	*	*
59+40.00	60+10.00	TRANSITION	-3.00%
60+10.00	63+46.33	-1.50%	-3.00%
63+46.33	68+86.07	*	*
68+86.07	END	-3.00%	TRANSITION

*STATION INTERVALS WITHOUT CROSS SLOPE INFORMATION SHALL MATCH EXISTING CROSS SLOPES OR REFER TO INTERSECTION LAYOUTS

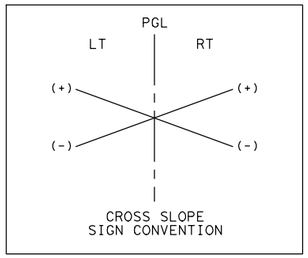

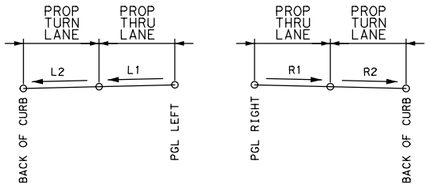

NUMBER	DATE	REVISION	APPROVED

STATE OF TEXAS
GREGORY C. CALKINS
111309
LICENSED
PROFESSIONAL ENGINEER
9/28/2020

Binkley & Barfield, Inc
consulting engineers
Texas Registration Number F-257

CEDAR PARK

ANDERSON MILL ROAD
TYPICAL SECTIONS

DESIGN BY:	GCC	SCALE:	NTS
DRAWN BY:	DSH		
CHECKED BY:	BMB		
APPROVED BY:	BDR	SHEET:	3 OF 3
PROJECT NO:	156402		
DATE:	9/28/2020	PAGE:	5

9/28/2020
1:15:20 PM
I:\156402*Anderson*Mill*Road\CADD\SHEETS\GNPT1*AM*03.dgn

TRAFFIC CONTROL PLAN QUANTITIES

SHEET	641S	802S-BC.I.P.	803S-MO	870S-A	870S-A	870S-F	TXDOT ITEM 6001 6002
	STABILIZED CONSTRUCTION ENTRANCE	CIP PROJECT SIGNS	BARRICADES, SIGNS AND TRAFFIC HANDLING	WORK ZONE PAVEMENT MARKINGS (REMOVEABLE) 4 IN W (SOLID)	WORK ZONE PAVEMENT MARKINGS (REMOVEABLE) 4 IN Y (SOLID)	WORK ZONE PAVEMENT MARKINGS (REMOVEABLE) W (SYMBOLS)	PORTABLE CHANGEABLE MESSAGE SIGN
	EA	EA	MO	LF	LF	EA	EA
PHASE 1							
PHASE 1 TOTAL	2	-	-	16,435	1,460	3	3
PHASE 2							
PHASE 2 TOTAL	2	-	-	3,184	1,475		
PROJECT TOTAL	4	3	6	19,619	2,935	3	3

BID ALTERNATIVE - MILL & OVERLAY

BID ALTERNATE SHALL INCLUDE ALL REQUIRED ITEMS RELATED TO MILL AND OVERLAY OF EXISTING ASPHALT PAVEMENT WITHIN THE PROJECT LIMITS THAT IS NOT SHOWN TO BE REMOVED OR REPLACED.

SHEET	STATION	315S-A	307S	340S-A	871S-A
		SURFACE MILLING (2")	TACK COAT *	HOT MIX ASPHALTIC ASPHALT, 2 INCHES, TYPE D **	REFLECT TY I THERMOPLAST PVMT MARKING 24" 100 MILS (W SOLID)
		SY	GAL	TON	LF
SHEET 1 OF 14	BEGIN - 14+50	1,694	339	186	45
SHEET 2 OF 14	14+50 - 19+00	1,854	371	204	
SHEET 3 OF 14	19+00 - 23+50	1,404	281	154	
SHEET 4 OF 14	23+50 - 28+00	1,744	349	192	
SHEET 5 OF 14	28+00 - 32+50	1,287	257	142	
SHEET 6 OF 14	32+50 - 37+00	1,290	258	142	
SHEET 7 OF 14	37+00 - 41+50	1,467	293	161	
SHEET 8 OF 14	41+50 - 46+00	2,017	403	222	
SHEET 9 OF 14	46+00 - 50+50	1,300	260	143	
SHEET 10 OF 14	50+50 - 55+00	1,277	255	140	
SHEET 11 OF 14	55+00 - 59+50	1,266	253	139	
SHEET 12 OF 14	59+50 - 64+00	1,713	343	188	
SHEET 13 OF 14	64+00 - 68+50	1,714	343	189	
SHEET 14 OF 14	68+50 - END	681	136	75	
	PROJECT TOTAL	20,706	4,141	2,278	45

* BASIS OF ESTIMATE: 0.20 GAL/SY

** BASIS OF ESTIMATE: 110 LB/(IN*SY)

NUMBER	DATE	REVISION	APPROVED

STATE OF TEXAS
GREGORY C. CALKINS
111309
LICENSED
PROFESSIONAL ENGINEER
9/28/2020

Binkley & Barfield, Inc
consulting engineers
Texas Registration Number F-257

CEDAR PARK

ANDERSON MILL ROAD
TRAFFIC CONTROL & BID ALTERNATIVE SUMMARY

DESIGN BY:	GCC	SCALE:	NTS
DRAWN BY:	DSH		
CHECKED BY:	BMB		
APPROVED BY:	BDR	SHEET:	1 OF 1
PROJECT NO:	156402		
DATE:	9/28/2020	PAGE:	6

9/28/2020
1:15:21 PM
I:\156402*Anderson*Mill*Road\CADD\SHEETS\GNST1*AM*01.dgn

REMOVAL QUANTITIES

SHEET	STATION	TXDOT ITEM 104 6009	104S-A	104S-C	TXDOT ITEM 105-6108	315S-A	TXDOT ITEM 496 6002	TXDOT ITEM 496 6003	TXDOT ITEM 496 6004	TXDOT ITEM 496 6007	610S-R	824S	874S-A	874S-A	874S-A	874S-A	874S-A	874S-C	874S-E
		REMOVING CONC (RIPRAP)	REMOVE PC CONCRETE CURB	REMOVE PC CONCRETE SIDEWALKS & DRIVEWAYS	RMV STAB BASE & ASPH PV (17") *	SURFACE MILLING (6")	REMOVE STR (INLET)	REMOVE STR (MANHOLE)	REMOVE STR (SET)	REMOVE STR (PIPE)	REMOVAL OF EXISTING TREES	REMOVE EXIST TRAFFIC SIGN	ELIMINATING EXIST PAVEMENT MARKINGS (4")	ELIMINATING EXIST PAVEMENT MARKINGS (8")	ELIMINATING EXIST PAVEMENT MARKINGS (12")	ELIMINATING EXIST PAVEMENT MARKINGS (24")	ELIMINATING EXIST PAVEMENT MARKINGS (36")	ELIMINATING EXIST PAVEMENT MARKINGS, WORDS	ELIMINATING EXIST PAVEMENT MARKINGS, SYMBOLS
		SY	LF	SF	SY	SY	EA	EA	EA	LF	EA	EA	LF	LF	LF	LF	LF	EA	EA
SHEET 1 OF 14 *	BEGIN - 14+50		112	1,015		302				12		5	1,408	511	473	477	388	2	15
SHEET 2 OF 14	14+50 - 19+00	46	149	1,023	315	507	1		1	43	3			95					
SHEET 3 OF 14	19+00 - 23+50	18	4		2	752	2	2		44									
SHEET 4 OF 14	23+50 - 28+00		210	1,075	307	664			2	42		2		101	74	72			
SHEET 5 OF 14	28+00 - 32+50		105	212	270	690													
SHEET 6 OF 14	32+50 - 37+00	9	63	457	44	701	1												
SHEET 7 OF 14	37+00 - 41+50	10				721	1			8				52					
SHEET 8 OF 14	41+50 - 46+00	98	471	2,377	680	518	1			27				158	78				
SHEET 9 OF 14	46+00 - 50+50	15	153	448	196	646			1	31									
SHEET 10 OF 14	50+50 - 55+00					714													
SHEET 11 OF 14	55+00 - 59+50		181	771	284	670	1		1	53		1				24			
SHEET 12 OF 14	59+50 - 64+00		123	2,540	329	654			1	57		1		148	116	133			
SHEET 13 OF 14	64+00 - 68+50		127	708	201	663			1	26				128		27			
SHEET 14 OF 14 **	68+50 - END					436						4	375	151	26				
	PROJECT TOTAL	196	1,698	10,626	2,628	8,638	7	2	7	343	3	13	1,783	1,344	767	733	388	2	15

* FOR CONTRATOR'S INFORMATION ONLY - SUBSIDIARY TO ITEM 110S-A

ITEM 874 INCLUDES REMOVAL QUANTITIES PROVIDED ON SIGNING AND STRIPING SHEET 1, 2 & 17

REMOVAL OF PAVEMENT MARKINGS AND MARKERS BY WATER BLASTING METHOD.

ROADWAY QUANTITIES

SHEET	STATION	110S-A	132S-A	210S-A	306S	340S-A	430S-A	432S-4	432S-RP-1B	432S-RP-C	504S-3W	504S-3G	504S-4PB	
		STREET EXCAVATION	EMBANKMENT	FLEXIBLE BASE 15"	PRIME COAT *	HOT MIX ASPHALTIC ASPHALT, 6 INCHES, TYPE D **	PC CONCRETE CURB AND GUTTER (EXCAVATION)	NEW PC CONCRETE SIDEWALKS 4 INCH THICKNESS	PC SIDEWALK CURB RAMP WITH PAVERS (TYPE 1B)	PC SIDEWALK CURB RAMP WITH PAVERS (COMBINED)	ADJUSTING WATER VALVE BOXES TO GRADE	ADJUSTING GAS VALVE TO GRADE	ADJUSTING PULL BOX TO GRADE	RELOCATE BENCHMARK/ REESTABLISH CONTROL POINTS ***
		CY	CY	CY	GAL	TON	LF	SF	EA	EA	EA	EA	EA	EA
SHEET 1 OF 14	BEGIN - 14+50	258	24	268	116	191	581	501		2	1		1	
SHEET 2 OF 14	14+50 - 19+00	817	96	669	339	559	880	615	2		1			1
SHEET 3 OF 14	19+00 - 23+50	484	170	500	280	462	905				1			
SHEET 4 OF 14	23+50 - 28+00	771	116	693	367	605	920	529	2		1	1		1
SHEET 5 OF 14	28+00 - 32+50	750	99	623	339	559	902	132	1		1			2
SHEET 6 OF 14	32+50 - 37+00	831	87	644	349	575	900	364	1					1
SHEET 7 OF 14	37+00 - 41+50	579	95	526	292	482	905				1			
SHEET 8 OF 14	41+50 - 46+00	1,180	26	984	498	821	1064	1403	2	2	3		2	1
SHEET 9 OF 14	46+00 - 50+50	732	49	638	344	568	900	243	1	1	3			
SHEET 10 OF 14	50+50 - 55+00	566	57	565	311	513	902				2			1
SHEET 11 OF 14	55+00 - 59+50	544	269	704	372	614	954	556	1	1	3		1	2
SHEET 12 OF 14	59+50 - 64+00	604	192	759	406	670	852	1845	2	1	2			2
SHEET 13 OF 14	64+00 - 68+50	651	67	691	371	613	891	395	2		1			
SHEET 14 OF 14	68+50 - END	352	19	375	202	333	496				2			1
	PROJECT TOTAL	9,119	1,366	8,639	4,584	7,565	12,051	6,582	14	7	22	1	4	12

* BASIS OF ESTIMATE: 0.20 GAL/SY

** BASIS OF ESTIMATE: 110 LB/(IN*SY)

*** FOR CONTRACTOR'S INFORMATION ONLY - ITEM IS SUBSIDAIRY TO 110S-A.

NUMBER	DATE	REVISION	APPROVED

STATE OF TEXAS
GREGORY C. CALKINS
111309
LICENSED
PROFESSIONAL ENGINEER
9/28/2020

Binkley & Barfield, Inc
consulting engineers
Texas Registration Number F-257

CEDAR PARK

ANDERSON MILL ROAD
REMOVAL & ROADWAY SUMMARY

DESIGN BY:	GCC	SCALE:	NTS
DRAWN BY:	DSH		
CHECKED BY:	BMB		
APPROVED BY:	BDR	SHEET:	1 OF 1
PROJECT NO:	156402		
DATE:	9/28/2020	PAGE:	7

9/28/2020
1:15:23 PM
T:\156402*Anderson*Mill*Road\CADD\SHEETS\GNSR1*AM*01.dgn

DRAINAGE QUANTITIES

SHEET	STATION	506S 4	506S M4	506S M5	506S B6	506S CB4	506S CN	TXDOT ITEM 465 6334	508S-I10S	508S-IG	508S-SET	509S-1	510-ASD18	510-ASD18	510-ASD24	510-ASD30	510-ASD36	510-ASD54	TXDOT ITEM 479 6006	591S-G
		MINOR MANHOLE HEIGHT ADJUSTMENT ALL DIA	MANHOLE (4' DIA)	MANHOLE (5' DIA)	BOX MANHOLE (6'x6')	CONNECTION TO EXIST INLET/JCT BOX	CONNECTION TC EXIST MANHOLE	INLET (COMPL) (TY IIR) (10')	INLET (COMPL) (CURB) (TY I) (10')	DROP INLET (4'X2')	SAFETY END TREATMENT (TY II) (18 IN) (RCP) (4:1) (P)	TRENCH EXCAVATION SAFETTY PROTECIVE SYSTEMS (ALL DEPTHS)	RC PIPE (CL III) (18 IN)	RC PIPE (CL IV) (18 IN)	RC PIPE (CL III) (24 IN)	RC PIPE (CL III) (30 IN)	RC PIPE (CL III) (36 IN)	RC PIPE (CL III) (54 IN)	ADJUSTING INLETS (CAP)	CONCRETE RIPRAP (4 IN)
		EA	EA	EA	EA	EA	EA	EA	EA	EA	EA	LF	LF	LF	LF	LF	LF	LF	EA	CY
SHEET 1 OF 14	BEGIN - 14+50								3	1		4	209							
SHEET 2 OF 14	14+50 - 19+00					1		1	2				183		142				1	
SHEET 3 OF 14	19+00 - 23+50		1		1				3	2		250	203		47	162		6		
SHEET 4 OF 14	23+50 - 28+00					1			2			14	421	41						
SHEET 5 OF 14	28+00 - 32+50		1			1			1	1		21	111		2					
SHEET 6 OF 14	32+50 - 37+00							2	1			450	435				18			
SHEET 7 OF 14	37+00 - 41+50								2	1		297	438		5		8			
SHEET 8 OF 14	41+50 - 46+00	1		1				3	2	1		296	277			10	10			1.5
SHEET 9 OF 14	46+00 - 50+50	1					1		2	1			64		56					2.2
SHEET 10 OF 14	50+50 - 55+00																			
SHEET 11 OF 14	55+00 - 59+50	1				1		1	3	2			323		52				1	2.5
SHEET 12 OF 14	59+50 - 64+00		1						1		1	34	554							
SHEET 13 OF 14	64+00 - 68+50								2	1		34	115							
SHEET 14 OF 14	68+50 - END																			
	PROJECT TOTAL	3	3	1	1	4	1	7	24	10	1	1,400	3,333	41	304	172	36	6	2	6.2

NUMBER	DATE	REVISION	APPROVED

STATE OF TEXAS
ELEANOR R. RIVERA
87879
LICENSED
PROFESSIONAL ENGINEER

Eleanor R. Rivera 9-28-2020

Binkley & Barfield, Inc
consulting engineers
Texas Registration Number F-257

CEDAR PARK

ANDERSON MILL ROAD

DRAINAGE SUMMARY

DESIGN BY: GCC
DRAWN BY: DSH
CHECKED BY: BMB
APPROVED BY: BDR
PROJECT NO: 156402
DATE: 9/28/2020

SCALE: NTS

SHEET: 1 OF 1

PAGE: 8

9/28/2020
1:15:27 PM
T:\156402*AndersonMill*Road\CADD\SHEETS\GNQT1*Summary*of*Drainage*Items*01.dgn

ITEM	TXDOT ITEM	DESC.CODE	DESCRIPTION	UNIT	QUANTITY
1	416	6031	DRILL SHAFT (TRF SIG POLE) (30 IN)	LF	11
2	416	6032	DRILL SHAFT (TRF SIG POLE) (36 IN)	LF	13
3	610	6009	REMOVE RD IL ASM	EA	1
4	618	6023	CONDUIT (PVC) (SCHD 40) (2")	LF	50
5	618	6024	CONDUIT (PVC) (SCHD 40) (2") (BORED)	LF	405
6	618	6029	CONDUIT (PVC) (SCHD 40) (3")	LF	100
7	618	6030	CONDUIT (PVC) (SCHD 40) (3") (BORED)	LF	810
8	620	6007	ELEC CONDR (NO. 8) BARE	LF	1,365
9	620	6008	ELEC CONDR (NO.8) INSULATED	LF	1,190
10	621	6005	TRAY CABLE (3 CONDR) (12 AWG)	LF	580
11	624	6010	GROUND BOX TY D (162922) W/ APRON	EA	4
12	636	6001	ALUMINUM SIGNS (TY A)	SF	19
13	680	6002	INSTALL HWY TRF SIG (ISOLATED)	EA	1
14	680	6004	REMOVING TRAFFIC SIGNALS	EA	1
15	682	6001	VEH SIG (12")LED(GRN)	EA	4
16	682	6002	VEH SIG (12")LED(GRN ARW)	EA	6
17	682	6003	VEH SIG (12")LED(YEL)	EA	4
18	682	6004	VEH SIG (12")LED(YEL ARW)	EA	6
19	682	6005	VEH SIG (12")LED(RED)	EA	6
20	682	6018	PED SIG SEC (LED)(COUNTDOWN)	EA	3
21	682	6055	BACK PLATE (12 IN)(4 SEC)(VENTED ALUM)	EA	4
22	682	6056	BACK PLATE (12 IN)(5 SEC)(VENTED ALUM)	EA	2
23	684	6031	TRF SIG CBL (TY A)(14 AWG)(5 CONDR)	LF	1,566
24	684	6033	TRF SIG CBL (TY A)(14 AWG)(7 CONDR)	LF	968
25	684	6079	TRF SIG CBL (TY C)(12 AWG)(2 CONDR)	LF	885
26	686	6035	INS TRF SIG PL AM(S)1 ARM(32')LUM	EA	1
27	686	6047	INS TRF SIG PL AM(S)1 ARM(44')LUM	EA	1
28*	686		MAST ARM WIND VIBRATION DAMPER	EA	2
29**	688	6001	PED DETECT PUSH BUTTON (APS)	EA	6
30***	688	6003	PED DETECTOR CONTROLLER UNIT	EA	1
31	690	6069	INSTALL OF LUMINAIRE MAST ARMS	EA	1
32	6027	6003	CONDUIT (PREPARE)	LF	45
33	6027	6008	GROUND BOX (PREPARE)	EA	1
34	6306	6007	VIVDS CABLING (CAT 5E ETHERNET)	LF	728
35	6306	6010	VIVDS CAM ASSY (INSTALL ONLY)	EA	4

* WIND DAMPER WHALL BE VALMONT MITIGATOR TR1 OR APPROVED EQUIVALENT. SUBSIDIARY TO 686.

** APS PUSH BUTTON STATIONS SHALL BE YELLOW

*** PED DETECTOR CONTROLLER UNIT SHALL BE POLARA iNAVIGATOR iNS SYSTEM WITH SHELF MOUNT CONTROLLER UNIT W/INTERCONNECT BOARD AND SDLC RACK MOUNT HUB

NUMBER	DATE	REVISION	APPROVED

STATE OF TEXAS
BRADFORD K. BRIMLEY
125348
LICENSED
PROFESSIONAL ENGINEER

Bradford Brimley
9-28-2020

Binkley & Barfield, Inc
consulting engineers
Texas Registration Number F-257

CEDAR PARK

ANDERSON MILL ROAD
TRAFFIC SIGNAL SUMMARY

DESIGN BY: BKB
DRAWN BY: BKB
CHECKED BY: DSS
APPROVED BY:
PROJECT NO: 156402
DATE: 9/28/2020

SCALE: NTS

SHEET: 1 OF 1

PAGE: 9

9/28/2020
1:15:32 PM
T:\156402*AndersonMill*Road\CADD\SHEETS\GNQT1*Signal*Quantities*01.dgn

SIGNING AND PAVEMENT MARKING QUANTITIES (TABLE 1 OF 2)

SHEET	TXDOT ITEM 685 6005	824S	824S	863S-2	863S-5	871S-A	871S-A	871S-A	871S-A	871S-A	871S-B	871S-D
	RELOCTE RDSD FLASH BEACON AM (SOLAR PWRD)	TRAFFIC SIGNS	TRAFFIC SIGNS (RELOCATE)	REFLECTORIZED PAVEMENT MARKERS (TY I-C)	REFLECTORIZED PAVMENT MARKERS (TY II-C-R)	REFLECT TY I THERMOPLAST PVMT MARKING 4" 100 MILS (W SOLID)	REFLECT TY I THERMOPLAST PVMT MARKING 4" 100 MILS (W BROKEN)	REFLECT TY I THERMOPLAST PVMT MARKING 8" 100 MILS (W SOLID)	REFLECT TY I THERMOSPLAST PVMT MARKING 12" 100 MILS (W SOLID)	REFLECT TY I THERMOPLAST PVMT MARKING 24" 100 MILS (W SOLID)	REFLECT TY I THERMOPLAST PVMT MARKING 24" 100 MILS (W WORDS)	REFLECT TY I THERMOPLAST PVMT MARKING 24" 100 MILS (W SYMBOLS)
	EA	EA	EA	EA	EA	LF	LF	LF	LF	LF	EA	EA
SHEET 1 OF 17					8		160					
SHEET 2 OF 17		1			19		176	208			2	1
SHEET 3 OF 17		1		32	23	545	154	911	525	538	8	9
SHEET 4 OF 17			1		24	599	200	266	114	23	2	2
SHEET 5 OF 17			2		10	900	230					
SHEET 6 OF 17					29	586	206	345	110	16	2	2
SHEET 7 OF 17			2		14	657	204	66	108	16	1	1
SHEET 8 OF 17					25	501	220	268	25		2	2
SHEET 9 OF 17					15	782	220	72			2	1
SHEET 10 OF 17			2		47	63	180	699	203	34	4	5
SHEET 11 OF 17			2		16	590	210	139	71	13	1	1
SHEET 12 OF 17					17	715	220	85			1	1
SHEET 13 OF 17	1		3		19	633	210	189	123	13	1	1
SHEET 14 OF 17		2	2		33	418	201	460	310	315	3	3
SHEET 15 OF 17					31	474	217	405	74	121	3	3
SHEET 16 OF 17	1		2		10	732	193		54			
SHEET 17 OF 17					4	175	90					
PROJECT TOTAL	2	4	16	32	344	8,370	3,291	4,112	1,717	1,089	32	32

SIGNING AND PAVEMENT MARKING QUANTITIES (TABLE 2 OF 2)

SHEET	871S-E	871S-E	871S-E	871S-E	871S-E	871S-G	871S-F	875S-A	875S-A	875S-A	875S-A	875S-B	875S-D
	REFLECT TY II PVMT MARKING 4" (W SOLID)	REFLECT TY II PVMT MARKING 4" (Y SOLID)	REFLECT TY II PVMT MARKING 8" (W SOLID)	REFLECT TY II PVMT MARKING 12" (W SOLID)	REFLECT TY II PVMT MARKING 24" (W SOLID)	REFLECT TY II PVMT MARKING 24" (W SYMBOLS)	REFLECT TY II PVMT MARKING 24" (W WORDS)	PAVEMENT SURFACE PREP (4") (ASPHALT)	PAVEMENT SURFACE PREP (8") (ASPHALT)	PAVEMENT SURFACE PREP (12") (ASPHALT)	PAVEMENT SURFACE PREP (24") (ASPHALT)	PAVEMENT SURFACE PREP (WORDS) (ASPHALT)	PAVEMENT SURFACE PREP (SYMBOLS) (ASPHALT)
	LF	LF	LF	LF	LF	LF	LF	LF	LF	LF	LF	EA	EA
SHEET 1 OF 17	160							160					
SHEET 2 OF 17	176		208			1	2	176	208			2	1
SHEET 3 OF 17	294		911	525	538	9	8	699	911	525	538	8	9
SHEET 4 OF 17	200		162			1	1	799	266	114	23	2	2
SHEET 5 OF 17	230							1130					
SHEET 6 OF 17	206		131			1	1	792	345	110	16	2	2
SHEET 7 OF 17	204							861	66	108	16	1	1
SHEET 8 OF 17	220							721	268	25		2	2
SHEET 9 OF 17	220		53			1	1	1002	72			2	1
SHEET 10 OF 17	180		213			1	1	243	699	203	34	4	5
SHEET 11 OF 17	210							800	139	71	13	1	1
SHEET 12 OF 17	220							935	85			1	1
SHEET 13 OF 17	210			26				843	189	123	13	1	1
SHEET 14 OF 17	201	200	274	126	90	1	1	619	460	310	315	4	9
SHEET 15 OF 17	217		148	26		1	1	691	405	74	121	3	3
SHEET 16 OF 17	430			26				925		54			
SHEET 17 OF 17	265							265					
PROJECT TOTAL	3,843		2,100	729	628	16	16	11,661	4,112	1,717	1,089	33	38

NUMBER	DATE	REVISION	APPROVED

STATE OF TEXAS
GREGORY C. CALKINS
111309
LICENSED
PROFESSIONAL ENGINEER
6/30/2021

Binkley & Barfield, Inc
consulting engineers
Texas Registration Number F-257

CEDAR PARK

ANDERSON MILL ROAD
SIGNING & PAVEMENT MARKINGS SUMMARY

DESIGN BY: GCC
DRAWN BY: DSH
CHECKED BY: BMB
APPROVED BY: BDR
PROJECT NO: 156402
DATE: 6/30/2021

SCALE: NTS

SHEET: 1 OF 1

PAGE: 10

6/30/2021
3:33:19 PM
T:\156402*Anderson*Mill*Road\CADD\SHEETS\GNPM1*AM*01.dgn

EROSION CONTROL

SHEET	604S-D	609S-A	609S-F	610S-D	TXDOT ITEM 506 6041	TXDOT ITEM 506 6043	639S	642S
	NATIVE SEEDING FOR EROSION CONTROL METHOD	TOPSOIL (4") & SEEDBED PREPARATION	WATERING *	TREE PROTECTION	BIODEG EROSN CONT LOGS (INSTALL)(12")	BIODEG EROSN CONT LOGS (REMOVE)	ROCK BERM	SILT FENCE FOR EROSION CONTROL
	SY	SY	KGAL	EA	LF	LF	LF	LF
SHEET 1 OF 14	627	627	19	8	77	77	16	
SHEET 2 OF 14	963	963	29	3	162	162	16	
SHEET 3 OF 14	1,432	1,432	43	9	201	201	32	
SHEET 4 OF 14	1,087	1,087	33	8	96	96	16	
SHEET 5 OF 14	1,078	1,078	32	7	77	77	16	
SHEET 6 OF 14	1,070	1,070	32	6	129	129	16	
SHEET 7 OF 14	1,324	1,324	40	6	98	98	16	
SHEET 8 OF 14	551	551	17		237	237	16	
SHEET 9 OF 14	792	792	24		59	59	16	25
SHEET 10 OF 14	1,206	1,206	36					369
SHEET 11 OF 14	1,156	1,156	35		297	297	16	
SHEET 12 OF 14	1,062	1,062	32		36	36	16	
SHEET 13 OF 14	1,023	1,023	31	1	149	149		325
SHEET 14 OF 14	558	558	17		72	72		243
PROJECT TOTAL	**13,929**	**13,929**	**418**	**48**	**1,690**	**1,690**	**192**	**962**

* BASIS OF ESTIMATE: 10 GALLONS PER SQUARE YARD TIMES 3 APPLICATIONS

NUMBER	DATE	REVISION	APPROVED

STATE OF TEXAS
GREGORY C. CALKINS
111309
LICENSED
PROFESSIONAL ENGINEER
9/28/2020

Binkley & Barfield, Inc
consulting engineers
Texas Registration Number F-257

CEDAR PARK

ANDERSON MILL ROAD
SW3P SUMMARY

DESIGN BY:	GCC	SCALE:	NTS
DRAWN BY:	DSH		
CHECKED BY:	BMB		
APPROVED BY:	BDR	SHEET:	1 OF 1
PROJECT NO:	156402		
DATE:	9/28/2020	PAGE:	11

9/28/2020
1:15:38 PM
I:\156402*Anderson*Mill*Road\CADD\SHEETS\GNSW1*AM*01.dgn

SEQUENCE OF CONSTRUCTION:

1. CONTRACTOR SHALL VIDEO OR PHOTO DOCUMENT ALL PUBLIC AND PRIVATE FACILITIES WITHIN THE LIMITS OF CONSTRUCTION, INCLUDING BUT NOT LIMITED TO ALL EXISTING DRIVEWAYS, ROADWAYS, TREES, UTILITIES, STORM INLETS, DRAINAGE FACILITIES, FENCES, TRAFFIC SIGNS, BUSINESS SIGNS, MAILBOXES, LANDSCAPING, IRRIGATION, ETC., AT CONTRACTOR'S COST.

2. CONTRACTOR SHALL REESTABLISH OR RELOCATE CONTROL POINTS AND BENCHMARKS IN CONFLICT WITH PROPOSED WORK AS SHOWN ON PLANS.

3. INSTALL EROSION/SEDIMENTATION CONTROLS AND TREE PROTECTION PRIOR TO ANY CLEARING, GRUBBING, OR EXCAVATION. CITY ENVIRONMENTAL INSPECTOR MUST APPROVE OF EROSION CONTROL INSTALLATION PRIOR TO CONSTRUCTION.

4. INSTALL PHASE 1 TRAFFIC CONTROL/TEMPORARY STRIPING AND SIGNAGE. EXISTING STRIPING THAT CONFLICTS WITH THE TEMPORARY STRIPING SHALL BE REMOVED BY WATER BLASTING PER CITY OF AUSTIN SPEC ITEM NO. 874S.

5. PLACE CW20-1D AND G20-2A SIGNS APPROXIMATELY 120' FROM ROADWORK ON EACH SIDESTREET ALONG ANDERSON MILL WHERE CONSTRUCTION IS IN PROGRESS.

6. INSTALL PROPOSED SIGNAL INFRASTRUCTURE AT ZEPPELIN DRIVE.

7. CONSTRUCT PHASE 1 ROADWAY IMPROVEMENTS BEING ALL PROPOSED PAVEMENT EXPANSION ALONG ALL EXISTING OUTSIDE LANES THIS INCLUDES ALL REQUIRED DEMOLITION AS WELL AS ALL, SIDEWALK, STORM, AND ASSOCIATED IMPROVEMENTS. REFER TO GENERAL NOTES, ROADWAY, SIDEWALK AND PEDESTRIAN, INTERSECTING STREET AND DRAINAGE PLAN SHEETS FOR CONSTRUCTION GUIDELINES REGARDING THESE SPECIFIC ITEMS. CONTRACTOR SHALL UTILIZE THE EXISTING SHOULDER TO ROUTE TRAFFIC AROUND CONSTRUCTION FOR LATERAL CROSSINGS. REFER TO CITY OF AUSTIN DETAIL 804S-1 FOR TRAFFIC CONTROL REQUIREMENTS.

8. REMOVE PHASE 1 TRAFFIC CONTROL/TEMPORARY STRIPING & SIGNAGE, AND INSTALL PHASE 2 TRAFFIC CONTROL/TEMPORARY STRIPING & SIGNAGE.

9. CONSTRUCT PHASE 2 ROADWAY IMPROVEMENTS BEING ALL REMAINING INTERSECTING STREET PAVEMENT IMPROVEMENTS. THIS INCLUDES ALL REQUIRED DEMOLITION AS WELL AS SIDEWALK AND PEDESTRIAN IMPROVEMENTS. REFER TO INTERSECTING SHEET AND SIDEWALK AND PEDESTRIAN PLAN SHEETS FOR SPECIFIC CONSTRUCTION GUIDELINES.

10. RELOCATE EXISTING SIGNS AND INSTALL NEW SIGNING AND STRIPING PER THE PLANS.

11. SCHEDULE PRELIMINARY WALK-THROUGH INSPECTION WITH CITY PRIOR TO THE REMOVAL OF EROSION CONTROLS.

12. COMPLETE ANY PUNCHLIST ITEMS THAT ARE DEVELOPED DURING THE PRELIMINARY WALK-THROUGH.

13. SCHEDULE FINAL WALK-THROUGH INSPECTION ONCE ALL PRELIMINARY WALK-THROUGH PUNCHLIST ITEMS ARE COMPLETE.

14. COMPLETE PERMANENT EROSION CONTROL AND SITE RESTORATION. REMOVE TEMPORARY EROSION/SEDIMENTATION CONTROLS AND TREE PROTECTION, ONLY AFTER CLEARANCE WITH THE ENVIRONMENTAL INSPECTOR. RESTORE ANY AREA DISTURBED DURING REMOVAL OF EROSION/ SEDIMENTATION CONTROLS AND TREE PROTECTION.

15. AFTER ACCEPTANCE FROM ENGINEER AND CITY, REMOVE ANY REMAINING SIGNING, CHANNELIZING DEVICES, AND WORK ZONE PAVEMENT MARKINGS AND RE-OPEN ALL ROADS TO TRAFFIC.

NOTES:

- THE CONTRACTOR SHALL COORDINATE ALL TRAFFIC CONTROL WITH THE CITY AND EMERGENCY RESPONSE AGENCIES.
- CONTRACTOR SHALL NOTIFY THE CITY AT LEAST 5 DAYS PRIOR TO ANY TRAFFIC SWITCHES, LANE CLOSURES OR INTERSECTION CLOSURES.
- THE CITY SHALL BE NOTIFIED AT LEAST 48 HOURS IN ADVANCE OF ANY WEEKEND WORK.
- IF DISTURBED AREA IS NOT TO BE WORKED ON FOR MORE THAN 14 DAYS, AT ANY POINT DURING CONSTRUCTION, DISTURBED AREA NEEDS TO BE STABILIZED BY REVEGETATION, MULCH, TARP, OR REVEGETATION MATTING.
- TWO DIRECTIONS OF TRAVEL SHALL BE MAINTAINED AT ALL TIMES. MINIMUM LANE WIDTH SHALL BE 9' FOR ANY TRAVEL LANE.
- CONTRACTOR SHALL MAINTAIN DRAINAGE THROUGHOUT ALL PHASES OF CONSTRUCTION.
- ALL TEMPORARY AND PERMANENT MARKING REMOVALS RELATED TO THE TRAFFIC CONTROL PLAN SHALL BE SUBSIDIARY TO TRAFFIC CONTROL. ALL PAVEMENT MARKING REMOVALS ON PERMANENT PAVEMENT SHALL BE REMOVED BY WATER BLASTING PER CITY OF AUSTIN SPEC ITEM NO. 874S.
- CONTRACTOR SHALL NOT MILL/REMOVE PAVEMENT OUTSIDE OF THE CONSTRUCTION PHASING LIMITS FOR EACH PHASE AND STEP.
- CONTRACTOR TO REMOVE OR BAG EXISTING SIGNS THAT WOULD CONFLICT WITH THE PROPOSED TRAFFIC CONTROL PLAN IN EACH PHASE AND STEP.
- TRAFFIC CONTROL DEVICES IN THE CONSTRUCTION AREA SHALL NOT BE PLACED WITHIN THE VEHICULAR SIGHT TRIANGLES AT INTERSECTIONS OR IN THE PATH OF PEDESTRIANS OR BICYCLISTS, BUT WITHIN THE ROW.
- ALL TCP SIGN SPACING AND PLACEMENT SHALL BE IN ACCORDANCE WITH THE CURRENT TMUTCD AND SIZED FOR A "CONVENTIONAL" ROADWAY.
- CONTRACTOR SHALL BE RESPONSIBLE FOR PLACING LEVEL UP AND TEMPORARY DRIVING SURFACES FOR GRADE DIFFERENCES AT ROADWAY CROSSINGS, DRIVEWAYS, INTERSECTIONS, ETC. TO PROVIDE ACCESS WHERE EXISTING PAVEMENT AND PROPOSED PAVEMENT GRADES DO NOT MATCH, TO BE SUBSIDIARY TO TRAFFIC CONTROL.
- CONTRACTOR SHALL CONTINUOUSLY MAINTAIN TRAFFIC CONTROL DEVICES, SW3P DEVICES, AND CONSTRUCTION EXITS.
- CONTRACTOR SHALL REFER TO CITY OF AUSTIN SPEC 804S-5 FOR CONSTRUCTION WARNING SIGNS IN ADVANCE OF THE PROJECT WORK ZONE.
- CONTRACTOR SHALL MINIMIZE DISRUPTIONS TO PEDESTRIAN TRAFFIC ON SIDEWALKS BY LEAVING PATHWAYS OPEN AS LONG AS POSSIBLE BEFORE REMOVAL AND REPLACEMENT.

NUMBER	DATE	REVISION	APPROVED

STATE OF TEXAS
GREGORY C. CALKINS
111309
LICENSED
PROFESSIONAL ENGINEER
9/28/2020

Binkley & Barfield, Inc
consulting engineers
Texas Registration Number F-257

CEDAR PARK

ANDERSON MILL ROAD
TCP GENERAL NOTES & SEQUENCE OF CONSTRUCTION

DESIGN BY:	GCC	SCALE:	NTS
DRAWN BY:	DSH		
CHECKED BY:	BMB		
APPROVED BY:	BDR	SHEET:	1 OF 1
PROJECT NO:	156402		
DATE:	9/28/2020	PAGE:	12

9/28/2020
1:15:41 PM
I:\156402*Anderson*Mill*Road\CADD\SHEETS\TCSQ1*AM*01.dgn

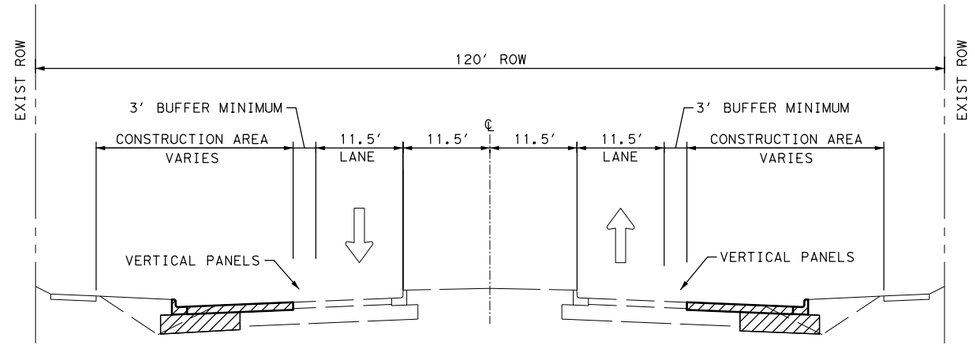

PHASE 1 TYPICAL SECTION
ANDERSON MILL ROAD

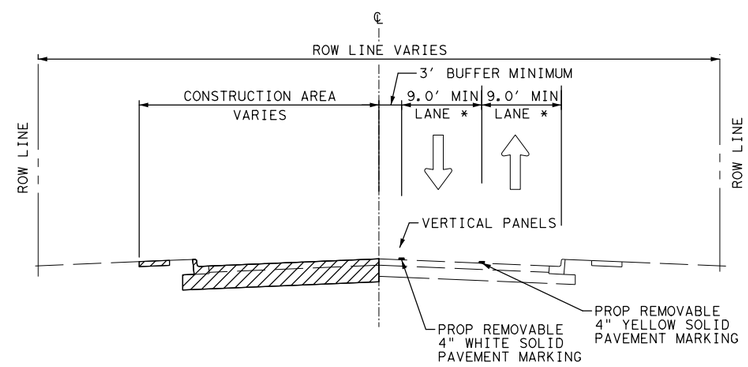

PHASE 1 INTERSECTING ROAD TYPICAL SECTION
UNDIVIDED

* ROADWAYS WITHOUT A MINIMUM OF 2 - 9.0' LANES SHALL USE FLAGGERS TO MAINTAIN TWO-WAY OPERATION (COA DETAIL 804S-2)

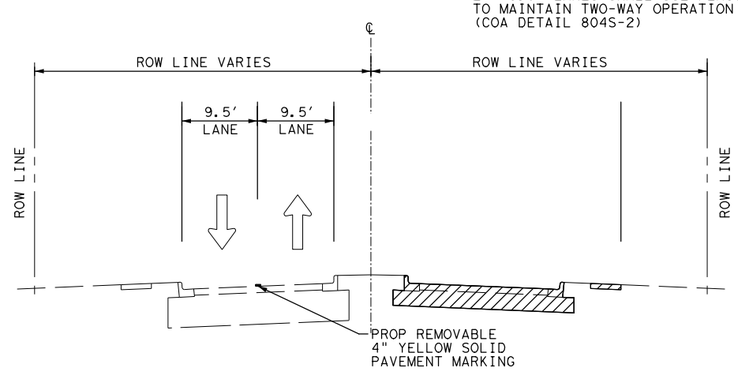

PHASE 1 INTERSECTING ROAD TYPICAL SECTION
DIVIDED

NOTES:
1. SEE CITY OF AUSTIN STANDARD 804S-4 FOR ADDITIONAL DETAILS.

NUMBER	DATE	REVISION	APPROVED

STATE OF TEXAS
GREGORY C. CALKINS
111309
LICENSED
PROFESSIONAL ENGINEER
9/28/2020

Binkley & Barfield, Inc
consulting engineers
Texas Registration Number F-257

CEDAR PARK

ANDERSON MILL ROAD
TCP TYPICAL SECTIONS

DESIGN BY:	GCC	SCALE:	NTS
DRAWN BY:	DSH		
CHECKED BY:	BMB		
APPROVED BY:	BDR	SHEET:	1 OF 2
PROJECT NO:	156402		
DATE:	9/28/2020	PAGE:	13

9/28/2020
1:15:45 PM
T:\156402*Anderson*Mill*Road\CADD\SHEETS\TCTY1*AM*01.dgn

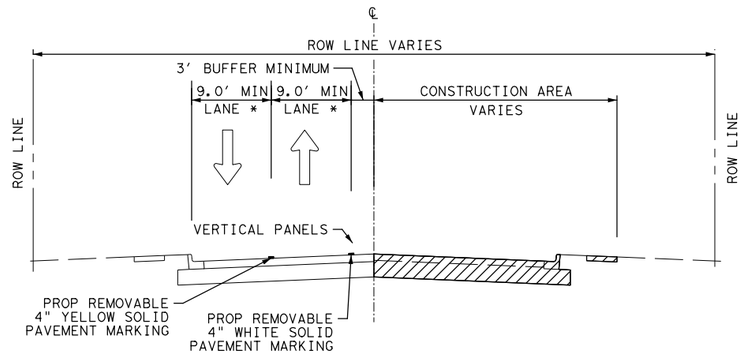

PHASE 2 INTERSECTING ROAD TYPICAL SECTION
UNDIVIDED

* ROADWAYS WITHOUT A MINIMUM OF 2 - 9.0' LANES SHALL USE FLAGGERS TO MAINTAIN TWO-WAY OPERATION

NOTES:
1. SEE CITY OF AUSTIN STANDARD 804S-4 FOR ADDITIONAL DETAILS.

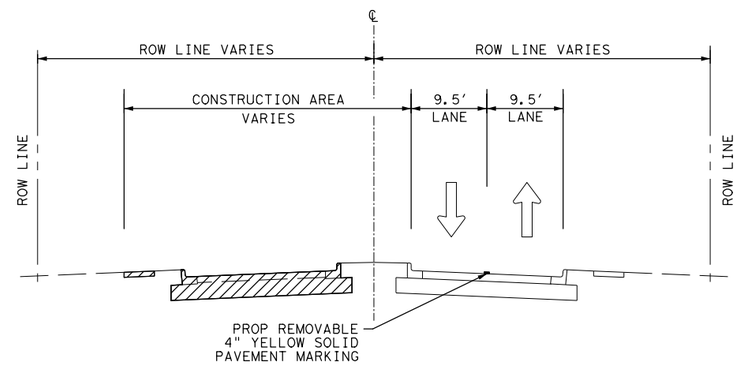

PHASE 2 INTERSECTING ROAD TYPICAL SECTION
DIVIDED

NUMBER	DATE	REVISION	APPROVED

STATE OF TEXAS
GREGORY C. CALKINS
111309
LICENSED
PROFESSIONAL ENGINEER
9/28/2020

Binkley & Barfield, Inc
consulting engineers
Texas Registration Number F-257

CEDAR PARK

ANDERSON MILL ROAD
TCP TYPICAL SECTIONS

DESIGN BY:	GCC	SCALE:	NTS
DRAWN BY:	DSH		
CHECKED BY:	BMB	SHEET:	2 OF 2
APPROVED BY:	BDR		
PROJECT NO:	156402	PAGE:	14
DATE:	9/28/2020		

9/28/2020
1:15:48 PM
T:\156402*Anderson*Mill*Road\CADD\SHEETS\TCTY1*AM*02.dgn

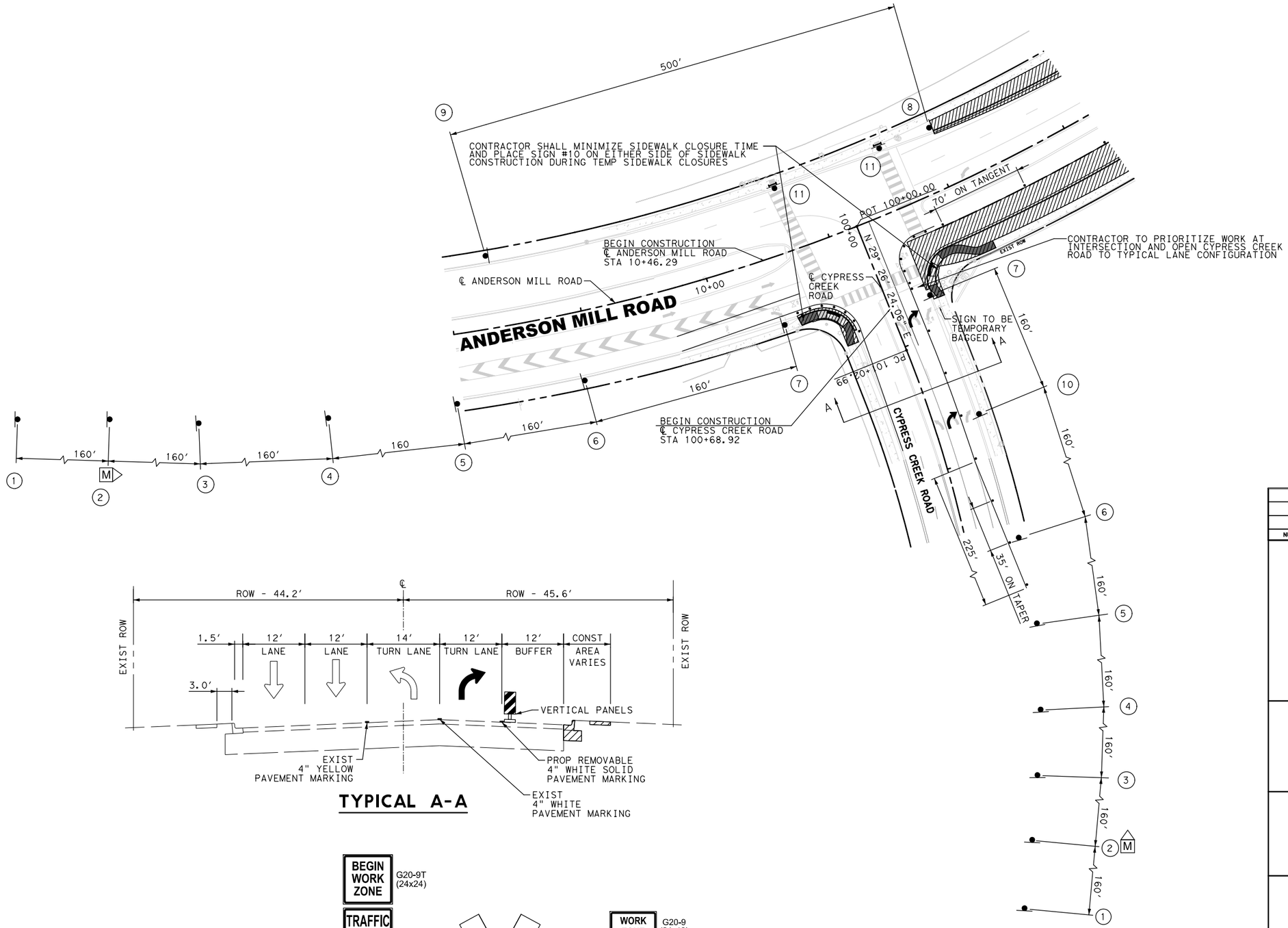

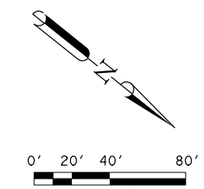

LEGEND

- • PORTABLE VERTICAL PANEL
- SIGN
- M PORTABLE, CHANGEABLE MESSAGE SIGN (TWO PHASE ALTERNATING MESSAGES SHALL READ "WORK ZONE AHEAD" AND "REDUCED SPEED AHEAD")

TYPICAL A-A

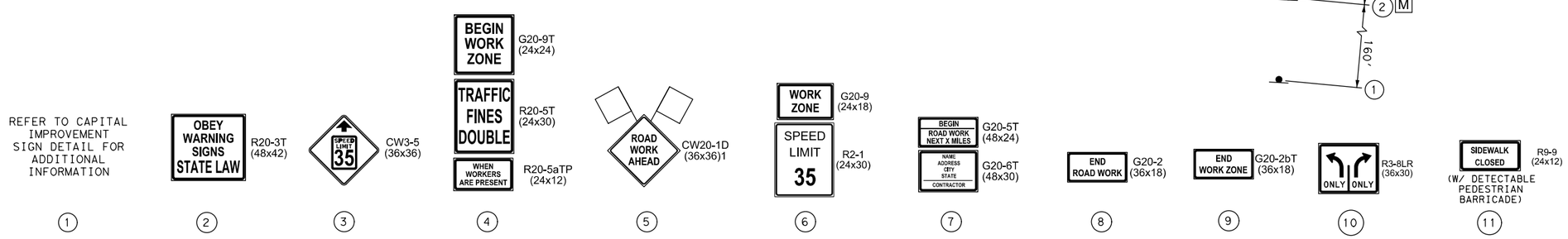

NUMBER	DATE	REVISION	APPROVED

STATE OF TEXAS
GREGORY C. CALKINS
111309
LICENSED
PROFESSIONAL ENGINEER
9/28/2020

Binkley & Barfield, Inc
consulting engineers
Texas Registration Number F-257

CEDAR PARK

ANDERSON MILL ROAD
TRAFFIC CONTROL

DESIGN BY:	GCC	SCALE:	1"=80'
DRAWN BY:	DSH		
CHECKED BY:	BMB	SHEET:	1 OF 2
APPROVED BY:	BDR		
PROJECT NO:	156402	PAGE:	15
DATE:	9/28/2020		

9/28/2020
1:15:56 PM
T:\156402*Anderson*Mill*Road\CADD\SHEETS\TCWS1*AM*01.dgn

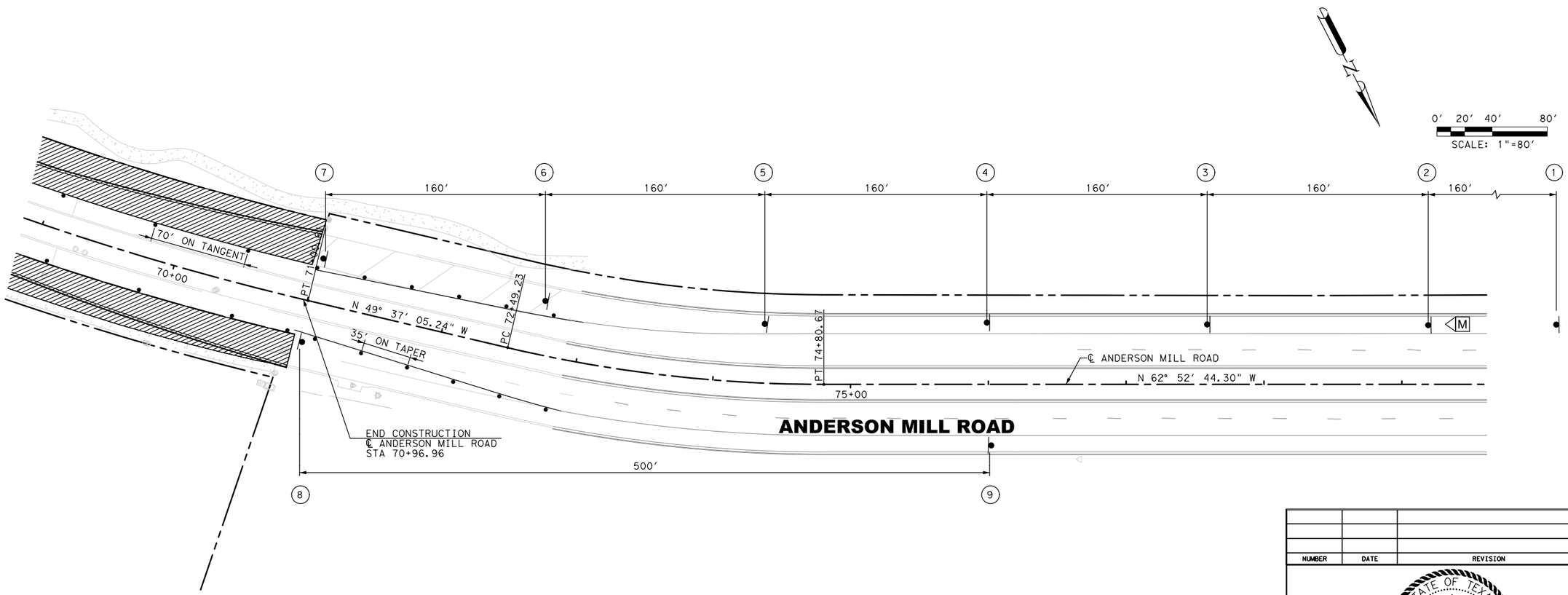

LEGEND

- • PORTABLE VERTICAL PANEL
- SIGN
- M PORTABLE, CHANGEABLE MESSAGE SIGN (TWO PHASE ALTERNATING MESSAGES SHALL READ "WORK ZONE AHEAD" AND "REDUCED SPEED AHEAD")

REFER TO CAPITAL IMPROVEMENT SIGN DETAIL FOR ADDITIONAL INFORMATION
(1)

OBEY WARNING SIGNS STATE LAW — R20-3T (48x42)
(2)

SPEED LIMIT 35 — CW3-5 (36x36)
(3)

BEGIN WORK ZONE — G20-9T (24x24)
TRAFFIC FINES DOUBLE — R20-5T (24x30)
WHEN WORKERS ARE PRESENT — R20-5aTP (24x12)
(4)

ROAD WORK AHEAD — CW20-1D (36x36)
(5)

WORK ZONE — G20-9 (24x18)
SPEED LIMIT 35 — R2-1 (24x30)
(6)

BEGIN ROAD WORK NEXT X MILES — G20-5T (48x24)
NAME ADDRESS CITY STATE CONTRACTOR — G20-6T (48x30)
(7)

END ROAD WORK — G20-2 (36x18)
(8)

END WORK ZONE — G20-2bT (36x18)
(9)

NUMBER	DATE	REVISION	APPROVED

STATE OF TEXAS
GREGORY C. CALKINS
111309
LICENSED
PROFESSIONAL ENGINEER
9/28/2020

Binkley & Barfield, Inc
consulting engineers
Texas Registration Number F-257

CEDAR PARK

ANDERSON MILL ROAD
TRAFFIC CONTROL

DESIGN BY:	GCC	SCALE:	1"=80'
DRAWN BY:	DSH		
CHECKED BY:	BMB	SHEET:	2 OF 2
APPROVED BY:	BDR		
PROJECT NO:	156402	PAGE:	16
DATE:	9/28/2020		

9/28/2020
1:16:00 PM
T:\156402*Anderson*Mill*Road\CADD\SHEETS\TCWS1*AM*02.dgn

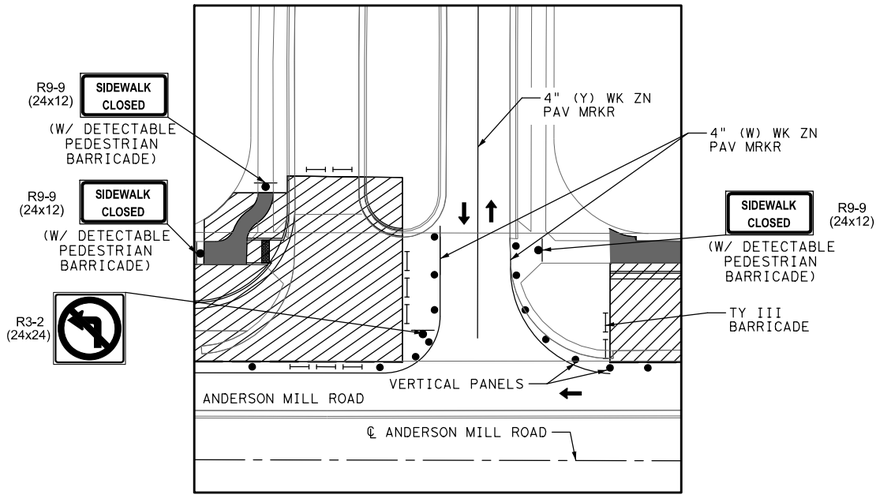

PHASE 1 - INTERSECTING ROAD
WITH MEDIAN

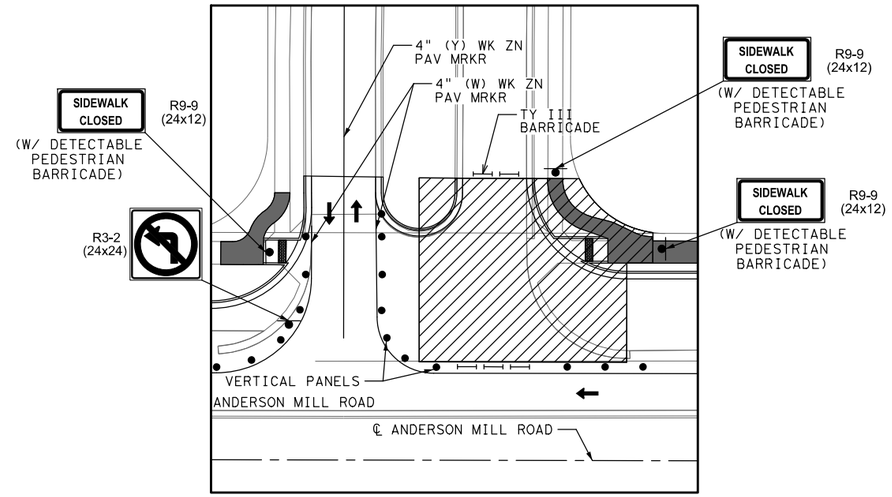

PHASE 2 - INTERSECTING ROAD
WITH MEDIAN

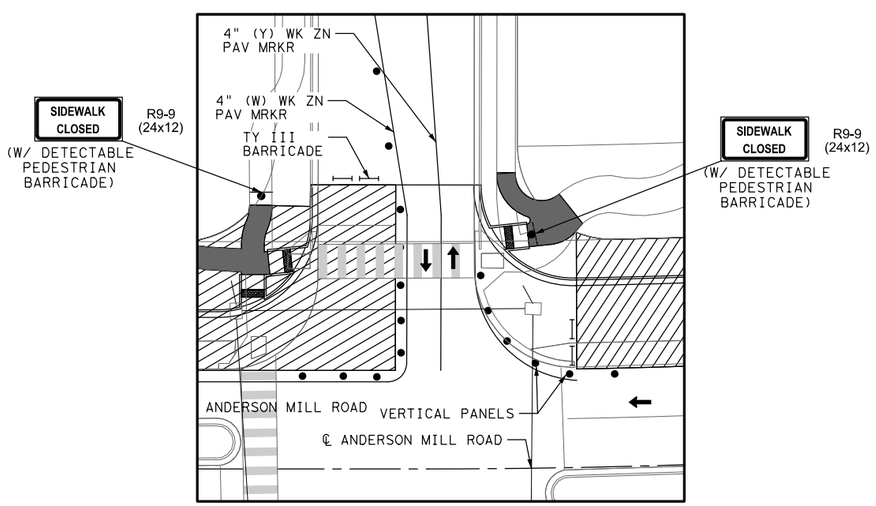

PHASE 1 - INTERSECTING ROAD
WITHOUT MEDIAN *

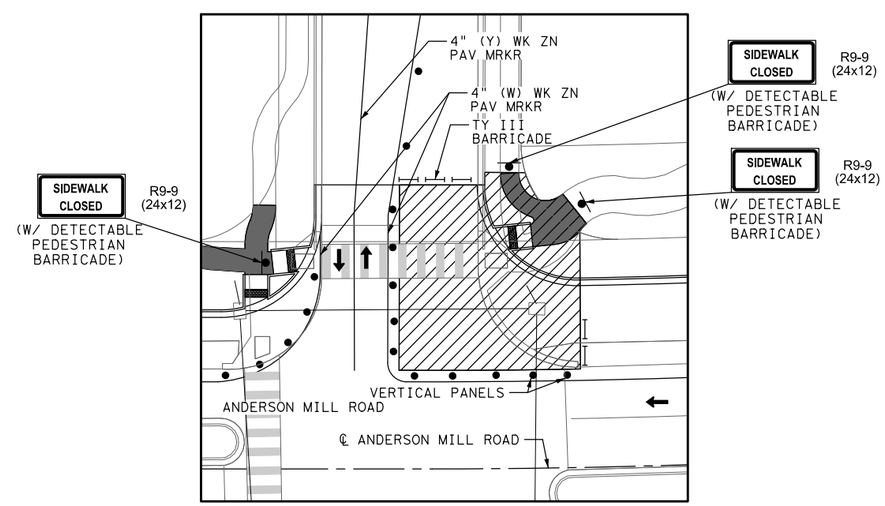

PHASE 2 - INTERSECTING ROAD
WITHOUT MEDIAN *

* ROADWAYS WITHOUT A MINIMUM OF 2 - 9.0' LANES SHALL USE FLAGGERS TO MAINTAIN TWO-WAY OPERATION

NUMBER	DATE	REVISION	APPROVED

STATE OF TEXAS
GREGORY C. CALKINS
111309
LICENSED
PROFESSIONAL ENGINEER
9/28/2020

Binkley & Barfield, Inc
consulting engineers
Texas Registration Number F-257

CEDAR PARK

ANDERSON MILL ROAD
TCP DETAIL SHEET

DESIGN BY:	GCC	SCALE: NTS	
DRAWN BY:	DSH		
CHECKED BY:	BMB		
APPROVED BY:	BDR	SHEET: 1 OF 1	
PROJECT NO:	156402		
DATE:	9/28/2020	PAGE: 17	

9/28/2020
1:16:04 PM
I:\156402*Anderson*Mill*Road\CADD\SHEETS\TCDT1*AM*01.dgn

ANDERSON MILL ROAD

BEGINNING CHAIN ANDERSON DESCRIPTION

==========

POINT AM01 N = 10,144,693.3965 E = 3,080,594.8140 STA 1+00.00

COURSE FROM AM01 TO PC ANDERSON-1 N 29° 01′ 12.35" W DIST 259.0898

CURVE DATA

CURVE ANDERSON-1
P.I. STATION 10+19.92 N = 10,145,497.8188 E = 3,080,148.5465
DELTA = 50° 32′ 11.54" (LT)
DEGREE = 4° 05′ 33.20"
TANGENT = 660.8287
LENGTH = 1,234.8406
RADIUS = 1,400.0000
EXTERNAL = 148.1261
LONG CHORD = 1,195.1999
MID. ORD. = 133.9533
P.C. STATION 3+59.09 N = 10,144,919.9575 E = 3,080,469.1253
P.T. STATION 15+93.93 N = 10,145,617.6029 E = 3,079,498.6648
C.C. N = 10,144,240.7945 E = 3,079,244.8959
BACK = N 29° 01′ 12.35" W
AHEAD = N 79° 33′ 23.90" W
CHORD BEAR = N 54° 17′ 18.12" W

COURSE FROM PT ANDERSON-1 TO PC ANDERSON-2 N 79° 33′ 23.90" W DIST 168.8362

CURVE DATA

CURVE ANDERSON-2
P.I. STATION 25+08.50 N = 10,145,783.3819 E = 3,078,599.2406
DELTA = 73° 25′ 35.76" (RT)
DEGREE = 5° 43′ 46.48"
TANGENT = 745.7382
LENGTH = 1,281.5360
RADIUS = 1,000.0000
EXTERNAL = 247.4476
LONG CHORD = 1,195.6225
MID. ORD. = 198.3631
P.C. STATION 17+62.77 N = 10,145,648.2068 E = 3,079,332.6254
P.T. STATION 30+44.30 N = 10,146,524.8560 E = 3,078,519.6067
C.C. N = 10,146,631.6413 E = 3,079,513.8888
BACK = N 79° 33′ 23.90" W
AHEAD = N 6° 07′ 48.13" W
CHORD BEAR = N 42° 50′ 36.01" W

COURSE FROM PT ANDERSON-2 TO PC ANDERSON-3 N 6° 07′ 48.13" W DIST 413.3393

CURVE DATA

CURVE ANDERSON-3
P.I. STATION 36+15.28 N = 10,147,092.5713 E = 3,078,458.6344
DELTA = 6° 19′ 15.00" (RT)
DEGREE = 2° 00′ 24.69"
TANGENT = 157.6408
LENGTH = 314.9618
RADIUS = 2,855.0000
EXTERNAL = 4.3488
LONG CHORD = 314.8021
MID. ORD. = 4.3422
P.C. STATION 34+57.64 N = 10,146,935.8319 E = 3,078,475.4682
P.T. STATION 37+72.60 N = 10,147,250.2112 E = 3,078,459.1594
C.C. N = 10,147,240.7040 E = 3,081,314.1436
BACK = N 6° 07′ 48.13" W
AHEAD = N 0° 11′ 26.87" E
CHORD BEAR = N 2° 58′ 10.63" W

COURSE FROM PT ANDERSON-3 TO PC ANDERSON-4 N 0° 11′ 26.87" E DIST 256.9474

CURVE DATA

CURVE ANDERSON-4
P.I. STATION 40+71.59 N = 10,147,549.1910 E = 3,078,460.1550
DELTA = 3° 24′ 11.00" (RT)
DEGREE = 4° 02′ 57.02"
TANGENT = 42.0340
LENGTH = 84.0433
RADIUS = 1,415.0000
EXTERNAL = 0.6242
LONG CHORD = 84.0309
MID. ORD. = 0.6239
P.C. STATION 40+29.55 N = 10,147,507.1573 E = 3,078,460.0150
P.T. STATION 41+13.59 N = 10,147,591.1423 E = 3,078,462.7898
C.C. N = 10,147,502.4453 E = 3,079,875.0072
BACK = N 0° 11′ 26.87" E
AHEAD = N 3° 35′ 37.87" E
CHORD BEAR = N 1° 53′ 32.37" E

COURSE FROM PT ANDERSON-4 TO PC ANDERSON-5 N 3° 35′ 37.87" E DIST 622.1306

CURVE DATA

CURVE ANDERSON-5
P.I. STATION 49+73.74 N = 10,148,449.5958 E = 3,078,516.7067
DELTA = 17° 40′ 23.91" (RT)
DEGREE = 3° 44′ 32.55"
TANGENT = 238.0143
LENGTH = 472.2483
RADIUS = 1,531.0000
EXTERNAL = 18.3908
LONG CHORD = 470.3784
MID. ORD. = 18.1725
P.C. STATION 47+35.72 N = 10,148,212.0495 E = 3,078,501.7871
P.T. STATION 52+07.97 N = 10,148,671.4011 E = 3,078,603.0386
C.C. N = 10,148,116.0811 E = 3,080,029.7764
BACK = N 3° 35′ 37.87" E
AHEAD = N 21° 16′ 01.78" E
CHORD BEAR = N 12° 25′ 49.82" E

COURSE FROM PT ANDERSON-5 TO PC ANDERSON-6 N 21° 16′ 01.78" E DIST 93.6229

CURVE DATA

CURVE ANDERSON-6
P.I. STATION 57+80.26 N = 10,149,204.7131 E = 3,078,810.6162
DELTA = 51° 50′ 06.00" (LT)
DEGREE = 5° 49′ 00.59"
TANGENT = 478.6621
LENGTH = 891.1210
RADIUS = 985.0000
EXTERNAL = 110.1449
LONG CHORD = 861.0407
MID. ORD. = 99.0670
P.C. STATION 53+01.60 N = 10,148,758.6482 E = 3,078,636.9972
P.T. STATION 61+92.72 N = 10,149,616.8545 E = 3,078,567.1886
C.C. N = 10,149,115.9247 E = 3,077,719.0764
BACK = N 21° 16′ 01.78" E
AHEAD = N 30° 34′ 04.22" W
CHORD BEAR = N 4° 39′ 01.22" W

COURSE FROM PT ANDERSON-6 TO PC ANDERSON-7 N 30° 34′ 04.22" W DIST 209.6636

CURVE DATA

CURVE ANDERSON-7
P.I. STATION 67+54.75 N = 10,150,100.7782 E = 3,078,281.3634
DELTA = 19° 03′ 01.02" (LT)
DEGREE = 2° 43′ 42.13"
TANGENT = 352.3668
LENGTH = 698.2293
RADIUS = 2,100.0000
EXTERNAL = 29.3573
LONG CHORD = 695.0175
MID. ORD. = 28.9525
P.C. STATION 64+02.38 N = 10,149,797.3806 E = 3,078,460.5625
P.T. STATION 71+00.61 N = 10,150,329.0693 E = 3,078,012.9504
C.C. N = 10,148,729.4084 E = 3,076,652.4045
BACK = N 30° 34′ 04.22" W
AHEAD = N 49° 37′ 05.24" W
CHORD BEAR = N 40° 05′ 34.73" W

COURSE FROM PT ANDERSON-7 TO PC ANDERSON-8 N 49° 37′ 05.24" W DIST 148.6155

CURVE DATA

CURVE ANDERSON-8
P.I. STATION 73+65.47 N = 10,150,500.6650 E = 3,077,811.1969
DELTA = 13° 15′ 39.06" (LT)
DEGREE = 5° 43′ 46.48"
TANGENT = 116.2421
LENGTH = 231.4455
RADIUS = 1,000.0000
EXTERNAL = 6.7334
LONG CHORD = 230.9293
MID. ORD. = 6.6884
P.C. STATION 72+49.23 N = 10,150,425.3541 E = 3,077,899.7435
P.T. STATION 74+80.67 N = 10,150,553.6565 E = 3,077,707.7361
C.C. N = 10,149,663.6109 E = 3,077,251.8645
BACK = N 49° 37′ 05.24" W
AHEAD = N 62° 52′ 44.30" W
CHORD BEAR = N 56° 14′ 54.77" W

COURSE FROM PT ANDERSON-8 TO AM02 N 62° 52′ 44.30" W DIST 540.4035

POINT AM02 N 10,150,800.0111 E 3,077,226.7524 STA 80+21.07

==========

ENDING CHAIN ANDERSON DESCRIPTION

NUMBER	DATE	REVISION	APPROVED

STATE OF TEXAS
GREGORY C. CALKINS
111309
LICENSED
PROFESSIONAL ENGINEER
9/28/2020

Binkley & Barfield, Inc
consulting engineers
Texas Registration Number F-257

CEDAR PARK

ANDERSON MILL ROAD
HORIZONTAL ALIGNMENT DATA

DESIGN BY: GCC
DRAWN BY: DSH
CHECKED BY: BMB
APPROVED BY: BDR
PROJECT NO: 156402
DATE: 9/28/2020

SCALE: NTS

SHEET: 1 OF 3

PAGE: 18

9/28/2020
1:16:07 PM
I:\156402*Anderson*Mill*Road\CADD\SHEETS\RDAD1*AM*01.dgn

CYPRESS CREEK ROAD

Beginning chain CYPRESS description

==========

Point CYPRESS01 N 10,145,456.5936 E 3,079,939.0376 Sta 100+00.00

Course from CYPRESS01 to PC CYPRESS02 N 29° 26′ 24.06" E Dist 102.9949

Curve Data

Curve CYPRESS02

P.I. Station		102+53.50	N	10,145,677.3570	E	3,080,063.6346
Delta	=	18° 00′ 15.76" (RT)				
Degree	=	6° 01′ 52.08"				
Tangent	=	150.5024				
Length	=	298.5239				
Radius	=	950.0000				
External	=	11.8477				
Long Chord	=	297.2972				
Mid. Ord.	=	11.7018				
P.C. Station		101+02.99	N	10,145,546.2888	E	3,079,989.6608
P.T. Station		104+01.52	N	10,145,779.1426	E	3,080,174.4979
C.C.			N	10,145,079.3523	E	3,080,816.9880
Back	= N 29° 26′ 24.06" E					
Ahead	= N 47° 26′ 39.82" E					
Chord Bear	= N 38° 26′ 31.94" E					

==========

Ending chain CYPRESS description

DRIFTING LEAF DRIVE

Beginning chain DRIFTING description

==========

Point DRIFTING01 N 10,145,637.5639 E 3,079,390.3676 Sta 100+00.00

Course from DRIFTING01 to DRIFTING02 N 9° 45′ 31.65" E Dist 214.1576

Point DRIFTING02 N 10,145,848.6226 E 3,079,426.6675 Sta 102+14.16

==========

Ending chain DRIFTING description

QUIET MOON TRAIL

Beginning chain QUIET description

==========

Point QUIET01 N 10,145,878.5777 E 3,078,191.3145 Sta 100+00.00

Curve Data

Curve QUIET02

P.I. Station		101+94.97	N	10,145,851.2822	E	3,078,384.3664
Delta	=	42° 36′ 21.57" (LT)				
Degree	=	11° 27′ 32.96"				
Tangent	=	194.9720				
Length	=	371.8074				
Radius	=	500.0000				
External	=	36.6694				
Long Chord	=	363.2999				
Mid. Ord.	=	34.1639				
P.C. Station		100+00.00	N	10,145,878.5777	E	3,078,191.3145
P.T. Station		103+71.81	N	10,145,961.8790	E	3,078,544.9354
C.C.			N	10,146,373.6537	E	3,078,261.3131
Back	= S 81° 57′ 08.33" E					
Ahead	= N 55° 26′ 30.10" E					
Chord Bear	= N 76° 44′ 40.89" E					

Course from PT QUIET02 to QUIET03 N 55° 26′ 30.10" E Dist 177.9020

Point QUIET03 N 10,146,062.7929 E 3,078,691.4465 Sta 105+49.71

==========

Ending chain QUIET description

PASSIONFLOWER PASS

Beginning chain PASSION description

==========

Point PASSION01 N 10,146,689.4813 E 3,078,271.3893 Sta 100+00.00

Course from PASSION01 to PC PASSION02 Due East Dist 61.5798

Curve Data

Curve PASSION02

P.I. Station		100+71.33	N	10,146,689.4813	E	3,078,342.7239
Delta	=	5° 35′ 04.71" (LT)				
Degree	=	28° 38′ 52.40"				
Tangent	=	9.7548				
Length	=	19.4941				
Radius	=	200.0000				
External	=	0.2377				
Long Chord	=	19.4864				
Mid. Ord.	=	0.2375				
P.C. Station		100+61.58	N	10,146,689.4813	E	3,078,332.9691
P.T. Station		100+81.07	N	10,146,690.4306	E	3,078,352.4323
C.C.			N	10,146,889.4813	E	3,078,332.9691
Back	= Due East					
Ahead	= N 84° 24′ 55.29" E					
Chord Bear	= N 87° 12′ 27.64" E					

Course from PT PASSION02 to PASSION03 N 84° 24′ 55.29" E Dist 148.5443

Point PASSION03 N 10,146,704.8863 E 3,078,500.2716 Sta 102+29.62

==========

Ending chain PASSION description

GRAND FALLS DRIVE W

Beginning chain XGRANDW description

==========

Point XGRANDW01 N 10,147,757.5446 E 3,078,327.4396 Sta 100+00.00

Course from XGRANDW01 to XGRANDW02 S 89° 51′ 49.22" E Dist 145.7801

Point XGRANDW02 N 10,147,757.1978 E 3,078,473.2193 Sta 101+45.78

==========

Ending chain XGRANDW description

GRAND FALLS DRIVE E

Beginning chain XGRANDE description

==========

Point XGRAND01 N 10,147,757.4661 E 3,078,473.2361 Sta 100+00.00

Course from XGRAND01 to XGRAND02 S 89° 37′ 16.37" E Dist 170.1777

Point XGRAND02 N 10,147,756.3411 E 3,078,643.4101 Sta 101+70.18

==========

Ending chain XGRANDE description

NUMBER	DATE	REVISION	APPROVED

STATE OF TEXAS
GREGORY C. CALKINS
111309
LICENSED
PROFESSIONAL ENGINEER
9/28/2020

Binkley & Barfield, Inc
consulting engineers
Texas Registration Number F-257

CEDAR PARK

ANDERSON MILL ROAD
HORIZONTAL ALIGNMENT DATA

DESIGN BY:	GCC	SCALE: NTS	
DRAWN BY:	DSH		
CHECKED BY:	BMB		
APPROVED BY:	BDR	SHEET: 2 OF 3	
PROJECT NO:	156402		
DATE:	9/28/2020	PAGE: 19	

9/28/2020
1:16:10 PM
T:\156402*AndersonMill*Road\CADD\SHEETS\ROAD1*AM*02.dgn

SHADY CREEK TRAIL

Beginning chain SHADY description

==========

Point SHADY01 N 10,148,254.8422 E 3,078,505.0776 Sta 100+00.00

Course from SHADY01 to SHADY02 S 87° 04′ 10.64" E Dist 103.4917

Point SHADY02 N 10,148,249.5514 E 3,078,608.4339 Sta 101+03.49

==========

Ending chain SHADY description

RHAPSODY RIDGE DRIVE

Beginning chain XRHAP description

==========

Point XRHAP01 N 10,149,168.9470 E 3,078,702.6483 Sta 100+00.00

Course from XRHAP01 to PC XRHAP-1 N 86° 42′ 37.25" E Dist 103.9697

Curve Data

Curve XRHAP-1

P.I. Station		101+80.18	N	10,149,179.2861	E	3,078,882.5266
Delta	=	30° 26′ 59.91" (RT)				
Degree	=	20° 27′ 46.00"				
Tangent	=	76.2055				
Length	=	148.8066				
Radius	=	280.0000				
External	=	10.1849				
Long Chord	=	147.0616				
Mid. Ord.	=	9.8274				
P.C. Station		101+03.97	N	10,149,174.9131	E	3,078,806.4467
P.T. Station		102+52.78	N	10,149,144.4997	E	3,078,950.3291
C.C.			N	10,148,895.3745	E	3,078,822.5141
Back	= N 86° 42′ 37.25" E					
Ahead	= S 62° 50′ 22.84" E					
Chord Bear	= S 78° 03′ 52.79" E					

==========

Ending chain XRHAP description

ZEPPELIN DRIVE W

Beginning chain ZEPPLINW description

==========

Point ZEPW01 N 10,149,679.2240 E 3,078,279.0908 Sta 100+00.00

Course from ZEPW01 to ZEPW02 N 59° 07′ 45.51" E Dist 216.3447

Point ZEPW02 N 10,149,790.2309 E 3,078,464.7854 Sta 102+16.34

==========

Ending chain ZEPPLINW description

ZEPPELIN DRIVE E

Beginning chain ZEPPLINE description

==========

Point ZEPE01 N 10,149,789.4113 E 3,078,465.2695 Sta 100+00.00

Course from ZEPE01 to ZEPE02 N 59° 07′ 58.75" E Dist 219.4623

Point ZEPE02 N 10,149,902.0059 E 3,078,653.6472 Sta 102+19.46

==========

Ending chain ZEPPLINE description

SURVEY BENCHMARKS AND CONTROL POINTS

HORIZONTAL REFERENCE:
ALL PROJECT COORDINATES AND BEARINGS ARE BASED ON THE TEXAS STATE PLANE COORDINATE SYSTEM, NAD 83/93 HARN, TEXAS CENTRAL ZONE, WHICH IS BASED UPON THE PUBLISHED POSITIONS OF THE CITY OF CEDAR PARK CONTROL MONUMENTS NO. 5, 44 AND 55. ALL COORDINATES ARE ADJUSTED SURFACE POSITIONS. DIVIDE BY A SURFACE ADJUSTMENT FACTOR OF 1.00012 TO ADJUST TO GRID.
UNITS: U.S. SURVEY FEET

VERTICAL REFERENCE:
ELEVATIONS ARE NAVD 88 BASED ON THE PUBLISHED ELEVATIONS OF CITY OF CEDAR PARK CONTROL MONUMENTS NO. 5 (ELEV. = 1019.18) AND NO. 55 (ELEV. = 1003.10), ESTABLISHED APRIL, 2009.

BENCHMARK #1
(SET) CUT SQUARE ON CENTER OF A STORM DRAIN CURB INLET ON THE EAST SIDE OF ANDERSON MILL ROAD +/-750′ NORTH OF ZEPPELIN DRIVE.
N = 10,150,398.5595
E = 3,078,012.2752
ELEVATION: 996.43

BENCHMARK #2
(SET) CUT SQUARE ON TOP OF CURB ON SOUTH SIDE OF ANDERSON MILL ROAD +/-200′ EAST OF CYPRESS CREEK ROAD.
N = 10,145,301.2738
E = 3,080,078.7837
ELEVATION: 1,004.50

BENCHMARK #3
(SET) CUT SQUARE ON TOP OF CURB ON SOUTH SIDE OF QUIET MOON TRAIL +/-150′ SOUTH OF ANDERSON MILL ROAD.
N = 10,145,944.6087
E = 3,078,564.0440
ELEVATION: 970.96

BENCHMARK #4
(SET) CUT SQUARE ON TOP OF CURB AT END OF MEDIAN ISLAND +/-150′ WEST OF ANDERSON MILL ROAD.
N = 10,146,687.7100
E = 3,078,319.8270
ELEVATION: 979.19

BENCHMARK #5
(SET) CUT SQUARE ON TOP OF CURB NORTH SIDE OF GRANDFALLS DRIVE +/-120 WEST OF ANDERSON MILL ROAD.
N = 10,147,777.9534
E = 3,078,323.4524
ELEVATION: 986.43

BENCHMARK #6
(SET) CUT SQUARE ON TOP SOUTHEAST CORNER OF STORM DRAIN DROP INLET ON WEST SIDE OF ANDERSON MILL ROAD DIRECTLY WEST OF RHAPSODY RIDGE DRIVE.
N = 10,149,169.4185
E = 3,078,659.7570
ELEVATION: 990.30

CONTROL POINT #1
SET 1/2" IRON ROD WITH YELLOW PLASTIC CAP STAMPED "TWG TRAV PT"
N: 10,145,401.0455
E: 3,079,913.5638

CONTROL POINT #2
SET 1/2" IRON ROD WITH YELLOW PLASTIC CAP STAMPED "TWG TRAV PT"
N: 10,145,689.0928
E: 3,079,370.1104

CONTROL POINT #3
SET 1/2" IRON ROD WITH YELLOW PLASTIC CAP STAMPED "TWG TRAV PT"
N: 10,145,772.3755
E: 3,078,918.4494

CONTROL POINT #4
SET 1/2" IRON ROD WITH YELLOW PLASTIC CAP STAMPED "TWG TRAV PT"
N: 10,146,078.2576
E: 3,078,724.3907

CONTROL POINT #5
SET 1/2" IRON ROD WITH YELLOW PLASTIC CAP STAMPED "TWG TRAV PT"
N: 10,146,428.4328
E: 3,078,495.5674

CONTROL POINT #6
SET 1/2" IRON ROD WITH YELLOW PLASTIC CAP STAMPED "TWG TRAV PT"
N: 10,146,695.5530
E: 3,078,539.5200

CONTROL POINT #7
SET 1/2" IRON ROD WITH YELLOW PLASTIC CAP STAMPED "TWG TRAV PT"
N: 10,147,173.8547
E: 3,078,415.7792

CONTROL POINT #8
SET 1/2" IRON ROD WITH YELLOW PLASTIC CAP STAMPED "TWG TRAV PT"
N: 10,147,727.5837
E: 3,078,510.4481

CONTROL POINT #9
SET 1/2" IRON ROD WITH YELLOW PLASTIC CAP STAMPED "TWG TRAV PT"
N: 10,148,257.6408
E: 3,078,455.8863

CONTROL POINT #10
SET 1/2" IRON ROD WITH YELLOW PLASTIC CAP STAMPED "TWG TRAV PT"
N: 10,148,662.9487
E: 3,078,642.5440

CONTROL POINT #11
SET 1/2" IRON ROD WITH YELLOW PLASTIC CAP STAMPED "TWG TRAV PT"
N: 10,149,187.6146
E: 3,078,664.1979

CONTROL POINT #12
SET 1/2" IRON ROD WITH YELLOW PLASTIC CAP STAMPED "TWG TRAV PT"
N: 10,149,619.5443
E: 3,078,605.2357

CONTROL POINT #13
SET 1/2" IRON ROD WITH YELLOW PLASTIC CAP STAMPED "TWG TRAV PT"
N: 10,149,736.2036
E: 3,078,454.4964

CONTROL POINT #14
SET 1/2" IRON ROD WITH YELLOW PLASTIC CAP STAMPED "TWG TRAV PT"
N: 10,150,225.8616
E: 3,078,175.4655

CONTROL POINT #15
SET 1/2" IRON ROD WITH YELLOW PLASTIC CAP STAMPED "TWG TRAV PT"
N: 10,150,413.2585
E: 3,077,999.5255

NUMBER	DATE	REVISION	APPROVED

STATE OF TEXAS
GREGORY C. CALKINS
111309
LICENSED
PROFESSIONAL ENGINEER
9/28/2020

Binkley & Barfield, Inc
consulting engineers
Texas Registration Number F-257

CEDAR PARK

ANDERSON MILL ROAD
HORIZONTAL ALIGNMENT DATA

DESIGN BY:	GCC	SCALE: NTS	
DRAWN BY:	DSH		
CHECKED BY:	BMB		
APPROVED BY:	BDR	SHEET: 3 OF 3	
PROJECT NO:	156402		
DATE:	9/28/2020	PAGE: 20	

9/28/2020
1:16:12 PM
T:\156402*AndersonMill*Road\CADD\SHEETS\ROAD1*AM*03.dgn

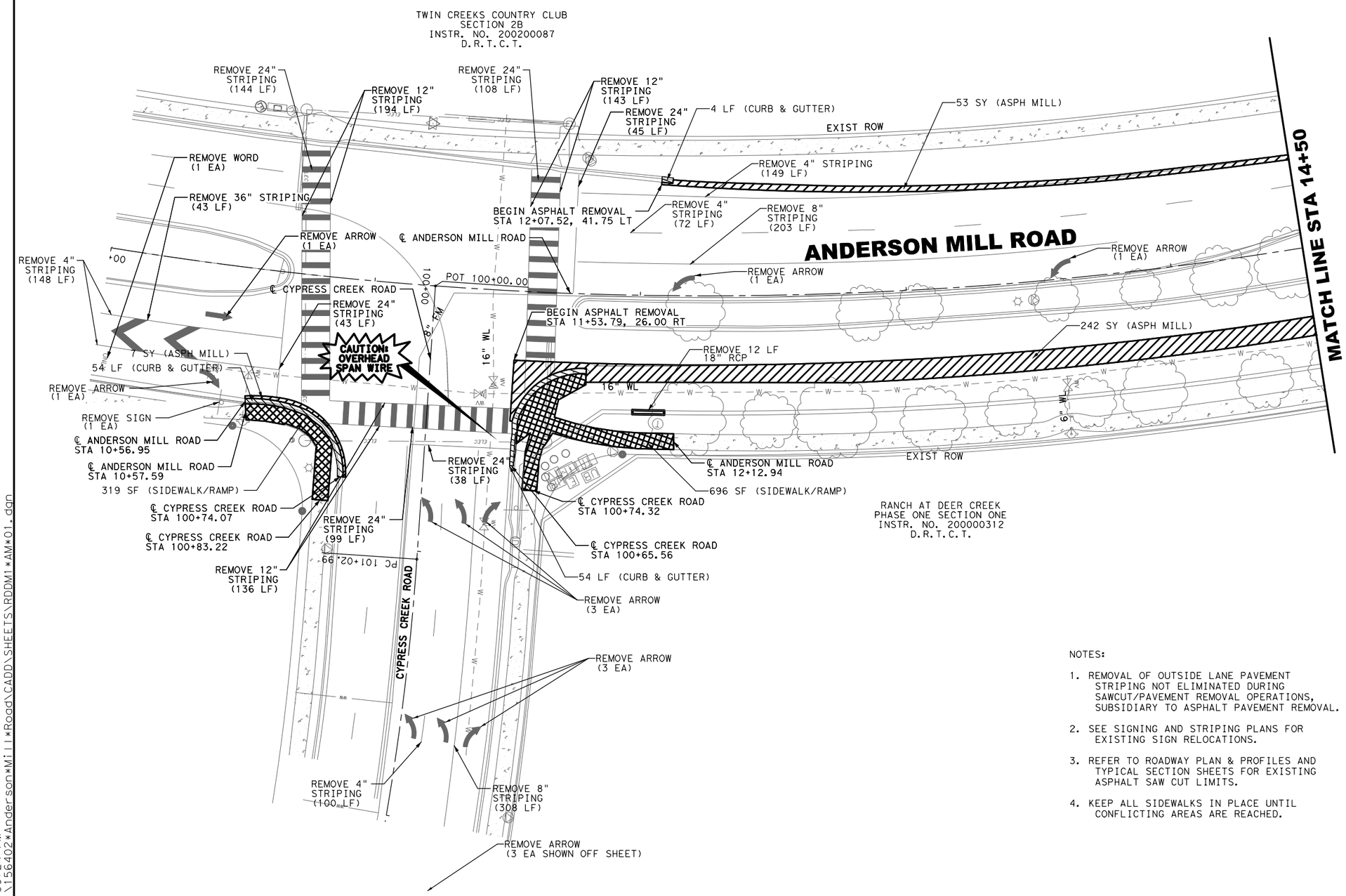

0' 10' 20' 40'
SCALE: 1"=40'

LEGEND

- ASPHALT SURFACE MILLING (6")
- REMOVE STAB BASE & ASPH PV (17")
- CONCRETE SIDEWALK AND PEDESTRIAN RAMP REMOVAL
- CONCRETE CURB & GUTTER REMOVAL
- CONCRETE RIPRAP REMOVAL
- INLET REMOVAL

NOTES:

1. REMOVAL OF OUTSIDE LANE PAVEMENT STRIPING NOT ELIMINATED DURING SAWCUT/PAVEMENT REMOVAL OPERATIONS, SUBSIDIARY TO ASPHALT PAVEMENT REMOVAL.
2. SEE SIGNING AND STRIPING PLANS FOR EXISTING SIGN RELOCATIONS.
3. REFER TO ROADWAY PLAN & PROFILES AND TYPICAL SECTION SHEETS FOR EXISTING ASPHALT SAW CUT LIMITS.
4. KEEP ALL SIDEWALKS IN PLACE UNTIL CONFLICTING AREAS ARE REACHED.

NUMBER	DATE	REVISION	APPROVED

STATE OF TEXAS
GREGORY C. CALKINS
111309
LICENSED
PROFESSIONAL ENGINEER
6/30/2021

Binkley & Barfield, Inc
consulting engineers
Texas Registration Number F-257

CEDAR PARK

ANDERSON MILL ROAD
EXISTING CONDITIONS AND REMOVAL PLANS
STA 10+00 - STA 14+50

DESIGN BY:	GCC	SCALE:	1"=40'
DRAWN BY:	DSH		
CHECKED BY:	BMB	SHEET:	1 OF 14
APPROVED BY:	BDR		
PROJECT NO:	156402	PAGE:	21
DATE:	6/30/2021		

6/30/2021
3:33:24 PM
T:\156402*Anderson*Mill*Road\CADD\SHEETS\RDDM1*AM*01.dgn

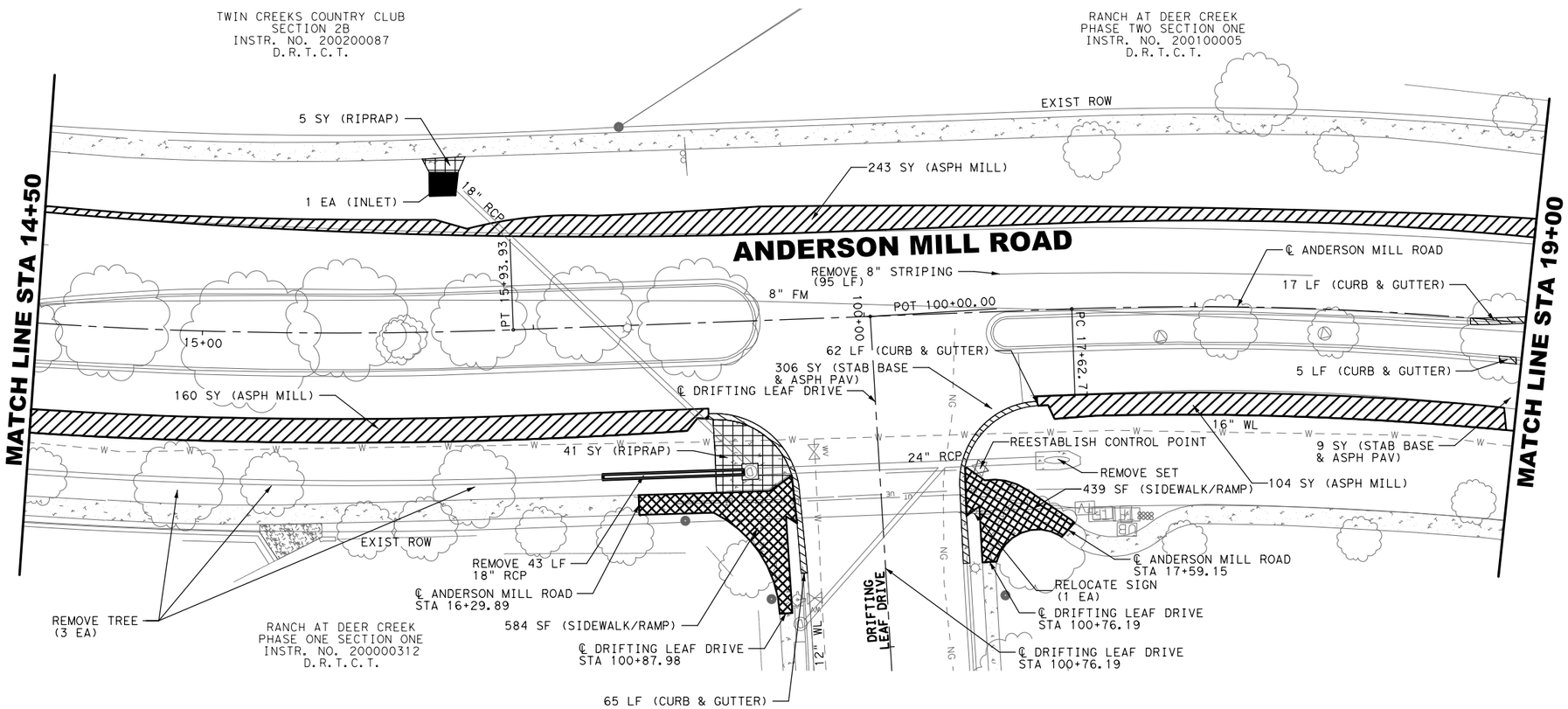

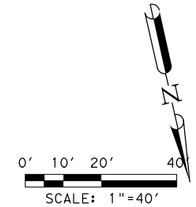

LEGEND

- ASPHALT SURFACE MILLING (6")
- REMOVE STAB BASE & ASPH PV (17")
- CONCRETE SIDEWALK AND PEDESTRIAN RAMP REMOVAL
- CONCRETE CURB & GUTTER REMOVAL
- CONCRETE RIPRAP REMOVAL
- INLET REMOVAL

NOTES:

1. REMOVAL OF OUTSIDE LANE PAVEMENT STRIPING NOT ELIMINATED DURING SAWCUT/PAVEMENT REMOVAL OPERATIONS, SUBSIDIARY TO ASPHALT PAVEMENT REMOVAL.
2. SEE SIGNING AND STRIPING PLANS FOR EXISTING SIGN RELOCATIONS.
3. REFER TO ROADWAY PLAN & PROFILES AND TYPICAL SECTION SHEETS FOR EXISTING ASPHALT SAW CUT LIMITS.
4. KEEP ALL SIDEWALKS IN PLACE UNTIL CONFLICTING AREAS ARE REACHED.

NUMBER	DATE	REVISION	APPROVED

STATE OF TEXAS
GREGORY C. CALKINS
111309
LICENSED
PROFESSIONAL ENGINEER
6/30/2021

Binkley & Barfield, Inc
consulting engineers
Texas Registration Number F-257

CEDAR PARK

ANDERSON MILL ROAD

EXISTING CONDITIONS AND REMOVAL PLANS

STA 14+50 - STA 19+00

DESIGN BY:	GCC	SCALE:	1"=40′
DRAWN BY:	DSH		
CHECKED BY:	BMB		
APPROVED BY:	BDR	SHEET:	2 OF 14
PROJECT NO:	156402		
DATE:	6/30/2021	PAGE:	22

6/30/2021
3:39:25 PM
T:\156402*Anderson*Mill*Road\CADD\SHEETS\RDDM1*AM*02.dgn

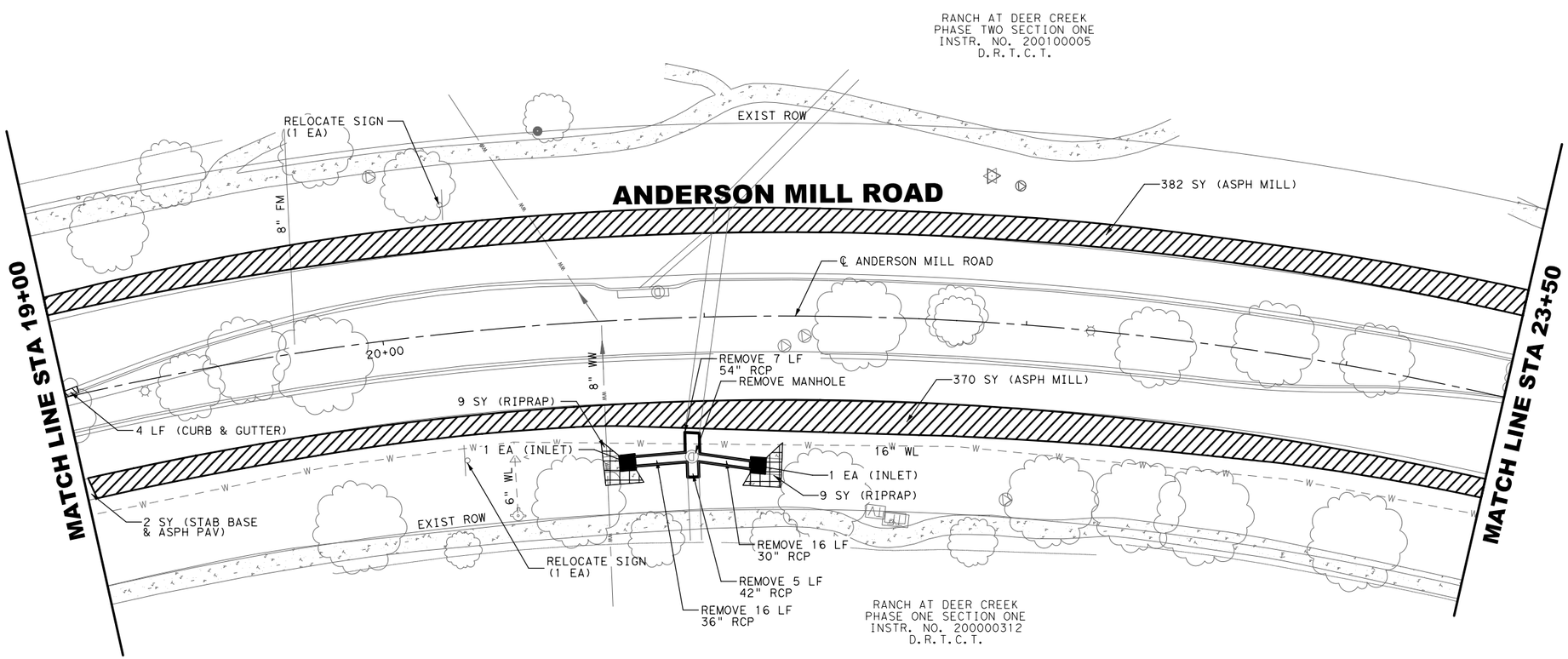

0′ 10′ 20′ 40′
SCALE: 1"=40′

LEGEND

- ASPHALT SURFACE MILLING (6")
- REMOVE STAB BASE & ASPH PV (17")
- CONCRETE SIDEWALK AND PEDESTRIAN RAMP REMOVAL
- CONCRETE CURB & GUTTER REMOVAL
- CONCRETE RIPRAP REMOVAL
- INLET REMOVAL

NOTES:

1. REMOVAL OF OUTSIDE LANE PAVEMENT STRIPING NOT ELIMINATED DURING SAWCUT/PAVEMENT REMOVAL OPERATIONS, SUBSIDIARY TO ASPHALT PAVEMENT REMOVAL.
2. SEE SIGNING AND STRIPING PLANS FOR EXISTING SIGN RELOCATIONS.
3. REFER TO ROADWAY PLAN & PROFILES AND TYPICAL SECTION SHEETS FOR EXISTING ASPHALT SAW CUT LIMITS.
4. KEEP ALL SIDEWALKS IN PLACE UNTIL CONFLICTING AREAS ARE REACHED.

NUMBER	DATE	REVISION	APPROVED

STATE OF TEXAS
GREGORY C. CALKINS
111309
LICENSED
PROFESSIONAL ENGINEER
6/30/2021

Binkley & Barfield, Inc
consulting engineers
Texas Registration Number F-257

CEDAR PARK

ANDERSON MILL ROAD

EXISTING CONDITIONS AND REMOVAL PLANS

STA 19+00 - STA 23+50

DESIGN BY:	GCC	SCALE:	1"=40′
DRAWN BY:	DSH		
CHECKED BY:	BMB	SHEET:	3 OF 14
APPROVED BY:	BDR		
PROJECT NO:	156402	PAGE:	23
DATE:	6/30/2021		

6/30/2021
3:39:26 PM
T:\156402*Anderson*Mill*Road\CADD\SHEETS\RDDM1*AM*03.dgn

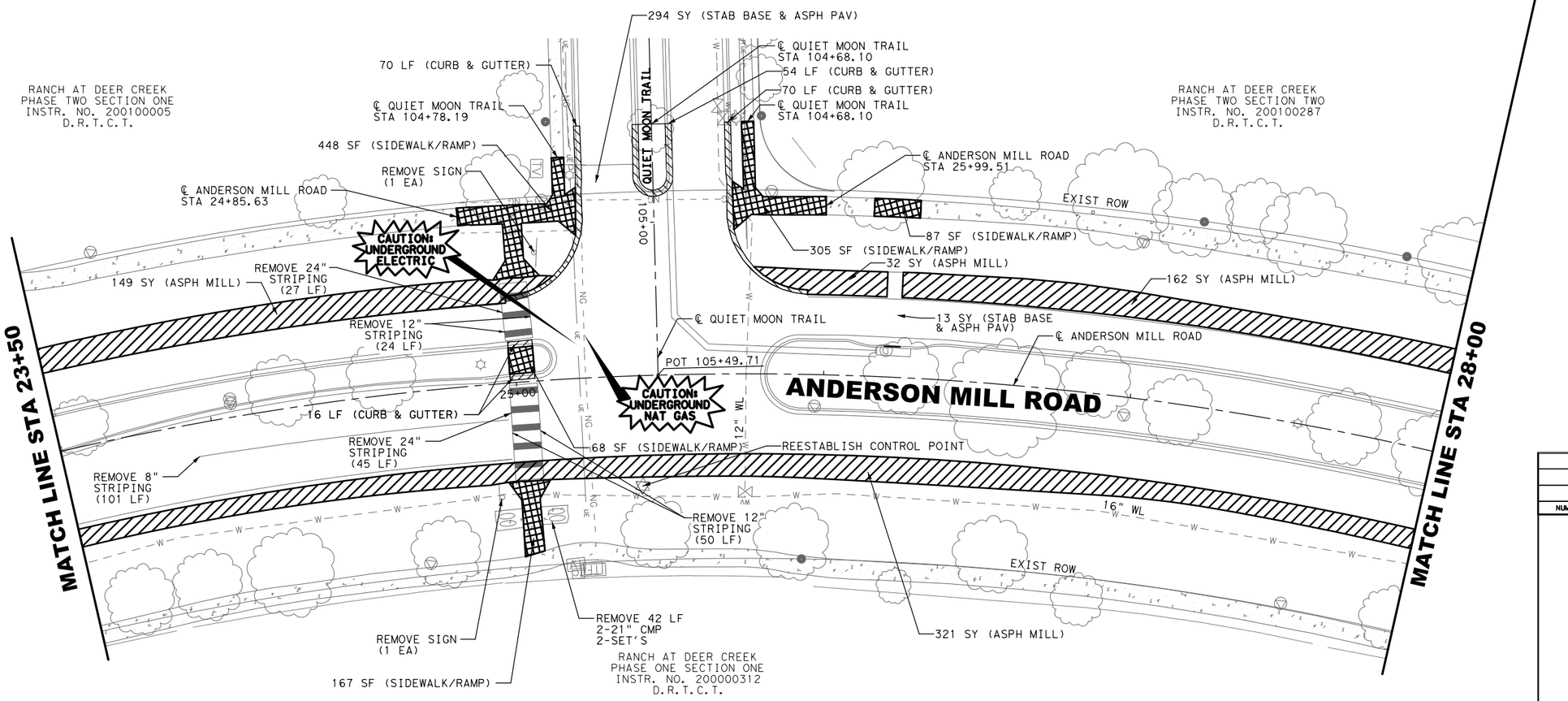

0' 10' 20' 40'
SCALE: 1"=40'

LEGEND

- ASPHALT SURFACE MILLING (6")
- REMOVE STAB BASE & ASPH PV (17")
- CONCRETE SIDEWALK AND PEDESTRIAN RAMP REMOVAL
- CONCRETE CURB & GUTTER REMOVAL
- CONCRETE RIPRAP REMOVAL
- INLET REMOVAL

NOTES:

1. REMOVAL OF OUTSIDE LANE PAVEMENT STRIPING NOT ELIMINATED DURING SAWCUT/PAVEMENT REMOVAL OPERATIONS, SUBSIDIARY TO ASPHALT PAVEMENT REMOVAL.
2. SEE SIGNING AND STRIPING PLANS FOR EXISTING SIGN RELOCATIONS.
3. REFER TO ROADWAY PLAN & PROFILES AND TYPICAL SECTION SHEETS FOR EXISTING ASPHALT SAW CUT LIMITS.
4. KEEP ALL SIDEWALKS IN PLACE UNTIL CONFLICTING AREAS ARE REACHED.

NUMBER	DATE	REVISION	APPROVED

STATE OF TEXAS
GREGORY C. CALKINS
111309
LICENSED
PROFESSIONAL ENGINEER
6/30/2021

Binkley & Barfield, Inc
consulting engineers
Texas Registration Number F-257

CEDAR PARK

ANDERSON MILL ROAD
EXISTING CONDITIONS AND REMOVAL PLANS
STA 23+50 - STA 28+00

DESIGN BY:	GCC	SCALE:	1"=40'
DRAWN BY:	DSH		
CHECKED BY:	BMB		
APPROVED BY:	BDR	SHEET:	4 OF 14
PROJECT NO:	156402		
DATE:	6/30/2021	PAGE:	24

6/30/2021
3:39:27 PM
T:\156402*Anderson*Mill*Road\CADD\SHEETS\RDDM1*AM*04.dgn

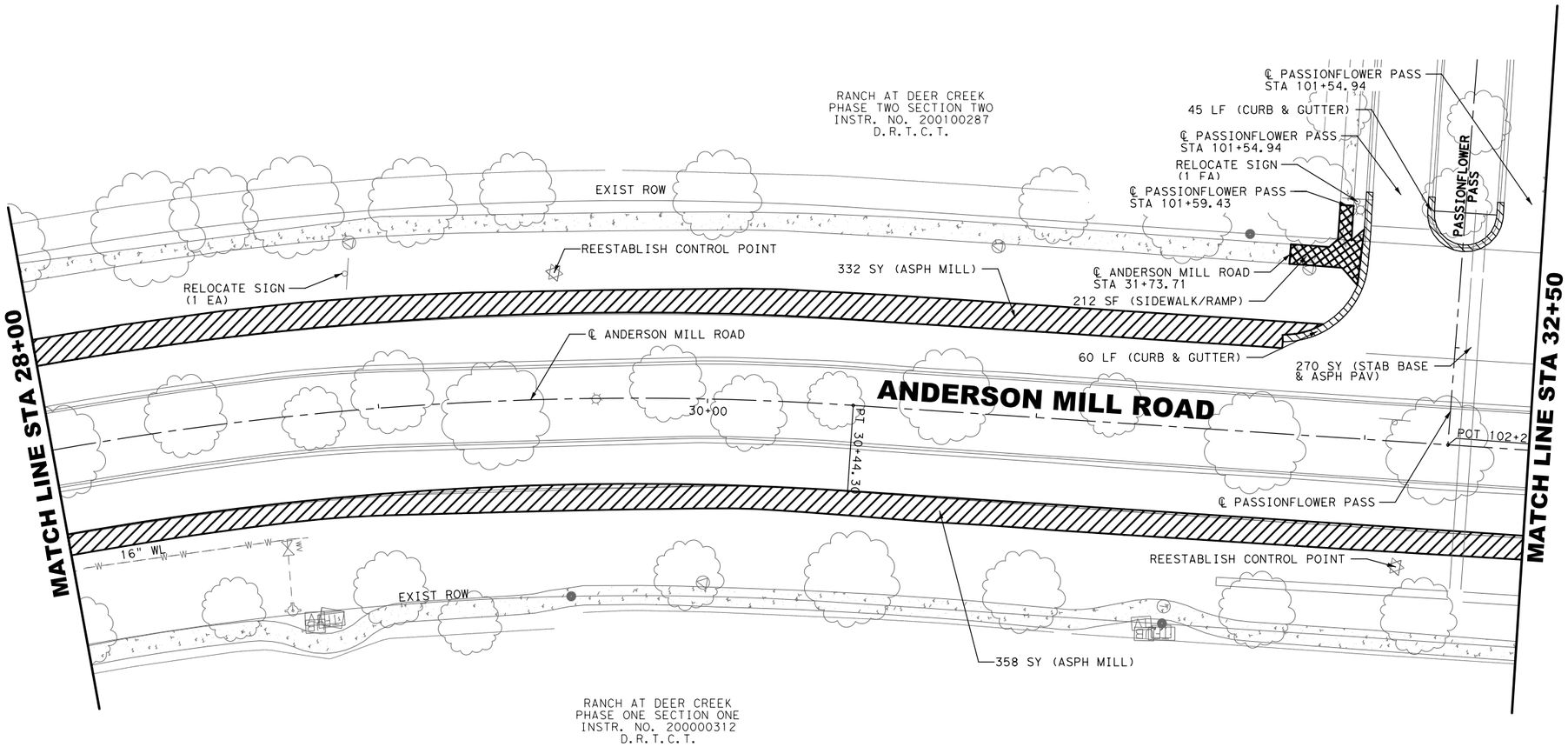

0′ 10′ 20′ 40′
SCALE: 1"=40′

LEGEND

- ASPHALT SURFACE MILLING (6")
- REMOVE STAB BASE & ASPH PV (17")
- CONCRETE SIDEWALK AND PEDESTRIAN RAMP REMOVAL
- CONCRETE CURB & GUTTER REMOVAL
- CONCRETE RIPRAP REMOVAL
- INLET REMOVAL

NOTES:

1. REMOVAL OF OUTSIDE LANE PAVEMENT STRIPING NOT ELIMINATED DURING SAWCUT/PAVEMENT REMOVAL OPERATIONS, SUBSIDIARY TO ASPHALT PAVEMENT REMOVAL.
2. SEE SIGNING AND STRIPING PLANS FOR EXISTING SIGN RELOCATIONS.
3. REFER TO ROADWAY PLAN & PROFILES AND TYPICAL SECTION SHEETS FOR EXISTING ASPHALT SAW CUT LIMITS.
4. KEEP ALL SIDEWALKS IN PLACE UNTIL CONFLICTING AREAS ARE REACHED.

NUMBER	DATE	REVISION	APPROVED

STATE OF TEXAS
GREGORY C. CALKINS
111309
LICENSED
PROFESSIONAL ENGINEER
6/30/2021

Binkley & Barfield, Inc
consulting engineers
Texas Registration Number F-257

CEDAR PARK

ANDERSON MILL ROAD
EXISTING CONDITIONS AND REMOVAL PLANS
STA 28+00 - STA 32+50

DESIGN BY:	GCC	SCALE:	1"=40′
DRAWN BY:	DSH		
CHECKED BY:	BMB	SHEET:	5 OF 14
APPROVED BY:	BDR		
PROJECT NO:	156402	PAGE:	25
DATE:	6/30/2021		

6/30/2021
3:39:28 PM
I:\156402*Anderson*Mill*Road\CADD\SHEETS\RDDM1*AM*05.dgn

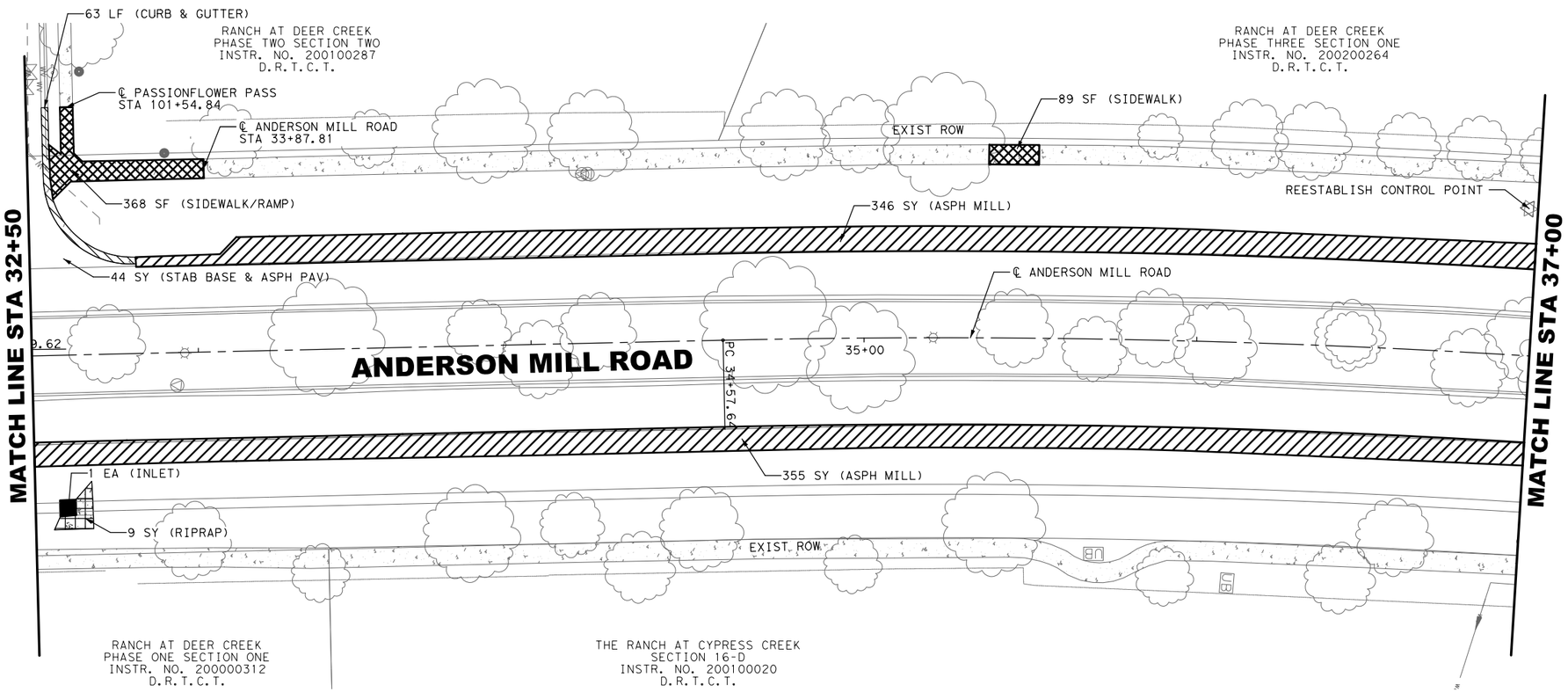

0′ 10′ 20′ 40′
SCALE: 1"=40′

LEGEND

- ASPHALT SURFACE MILLING (6")
- REMOVE STAB BASE & ASPH PV (17")
- CONCRETE SIDEWALK AND PEDESTRIAN RAMP REMOVAL
- CONCRETE CURB & GUTTER REMOVAL
- CONCRETE RIPRAP REMOVAL
- INLET REMOVAL

NOTES:

1. REMOVAL OF OUTSIDE LANE PAVEMENT STRIPING NOT ELIMINATED DURING SAWCUT/PAVEMENT REMOVAL OPERATIONS, SUBSIDIARY TO ASPHALT PAVEMENT REMOVAL.
2. SEE SIGNING AND STRIPING PLANS FOR EXISTING SIGN RELOCATIONS.
3. REFER TO ROADWAY PLAN & PROFILES AND TYPICAL SECTION SHEETS FOR EXISTING ASPHALT SAW CUT LIMITS.
4. KEEP ALL SIDEWALKS IN PLACE UNTIL CONFLICTING AREAS ARE REACHED.

NUMBER	DATE	REVISION	APPROVED

STATE OF TEXAS
GREGORY C. CALKINS
111309
LICENSED
PROFESSIONAL ENGINEER
6/30/2021

Binkley & Barfield, Inc
consulting engineers
Texas Registration Number F-257

CEDAR PARK

ANDERSON MILL ROAD

EXISTING CONDITIONS AND REMOVAL PLANS

STA 32+50 - STA 37+00

DESIGN BY:	GCC	SCALE:	1"=40′
DRAWN BY:	DSH		
CHECKED BY:	BMB	SHEET:	6 OF 14
APPROVED BY:	BDR		
PROJECT NO:	156402	PAGE:	26
DATE:	6/30/2021		

6/30/2021
3:39:29 PM
I:\156402*Anderson*Mill*Road\CADD\SHEETS\RDDM1*AM*06.dgn

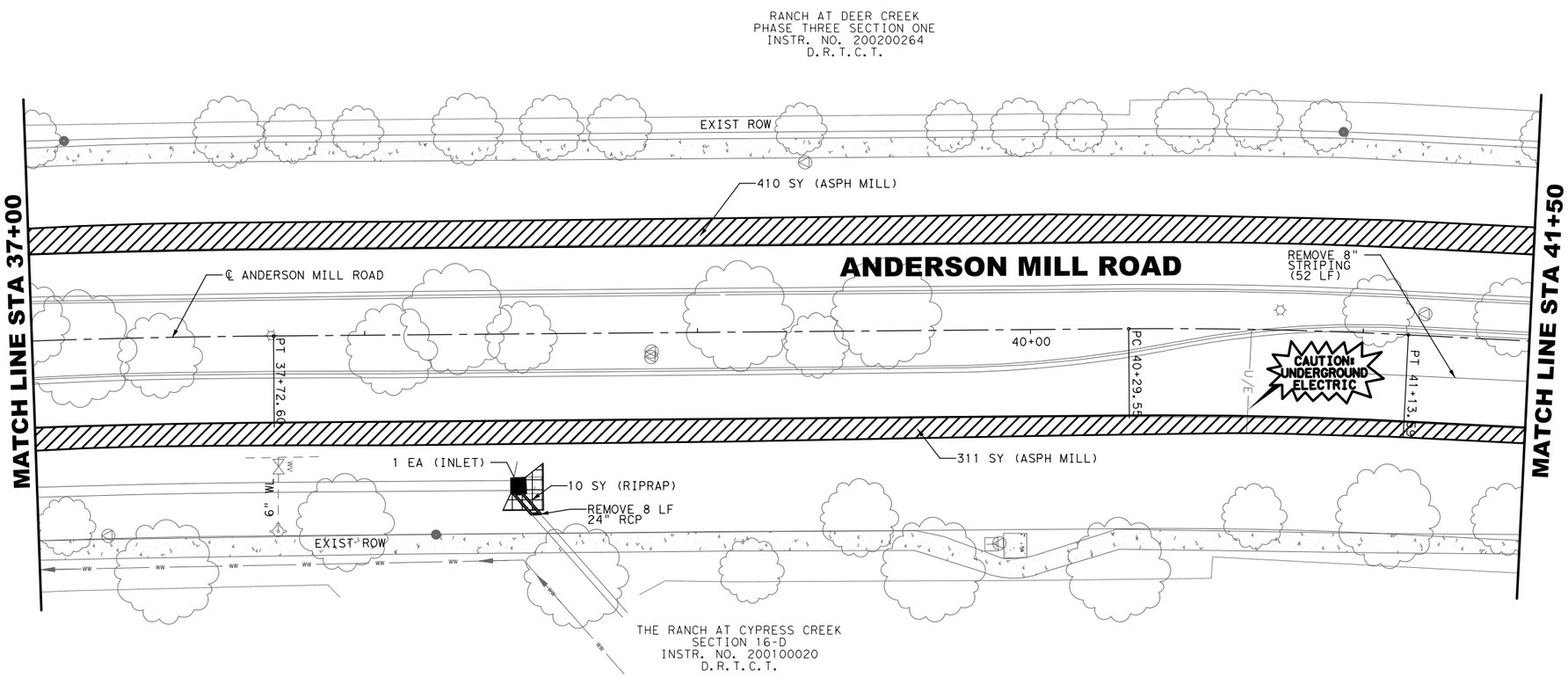

0' 10' 20' 40'
SCALE: 1"=40'

LEGEND

- ASPHALT SURFACE MILLING (6")
- REMOVE STAB BASE & ASPH PV (17")
- CONCRETE SIDEWALK AND PEDESTRIAN RAMP REMOVAL
- CONCRETE CURB & GUTTER REMOVAL
- CONCRETE RIPRAP REMOVAL
- INLET REMOVAL

NOTES:

1. REMOVAL OF OUTSIDE LANE PAVEMENT STRIPING NOT ELIMINATED DURING SAWCUT/PAVEMENT REMOVAL OPERATIONS, SUBSIDIARY TO ASPHALT PAVEMENT REMOVAL.
2. SEE SIGNING AND STRIPING PLANS FOR EXISTING SIGN RELOCATIONS.
3. REFER TO ROADWAY PLAN & PROFILES AND TYPICAL SECTION SHEETS FOR EXISTING ASPHALT SAW CUT LIMITS.
4. KEEP ALL SIDEWALKS IN PLACE UNTIL CONFLICTING AREAS ARE REACHED.

NUMBER	DATE	REVISION	APPROVED

STATE OF TEXAS
GREGORY C. CALKINS
111309
LICENSED
PROFESSIONAL ENGINEER
6/30/2021

Binkley & Barfield, Inc
consulting engineers
Texas Registration Number F-257

CEDAR PARK

ANDERSON MILL ROAD
EXISTING CONDITIONS AND REMOVAL PLANS
STA 37+00 - STA 41+50

DESIGN BY:	GCC	SCALE:	1"=40'
DRAWN BY:	DSH		
CHECKED BY:	BMB		
APPROVED BY:	BDR	SHEET:	7 OF 14
PROJECT NO:	156402		
DATE:	6/30/2021	PAGE:	27

6/30/2021
3:39:30 PM
T:\156402*Anderson*Mill*Road\CADD\SHEETS\RDDM1*AM*07.dgn

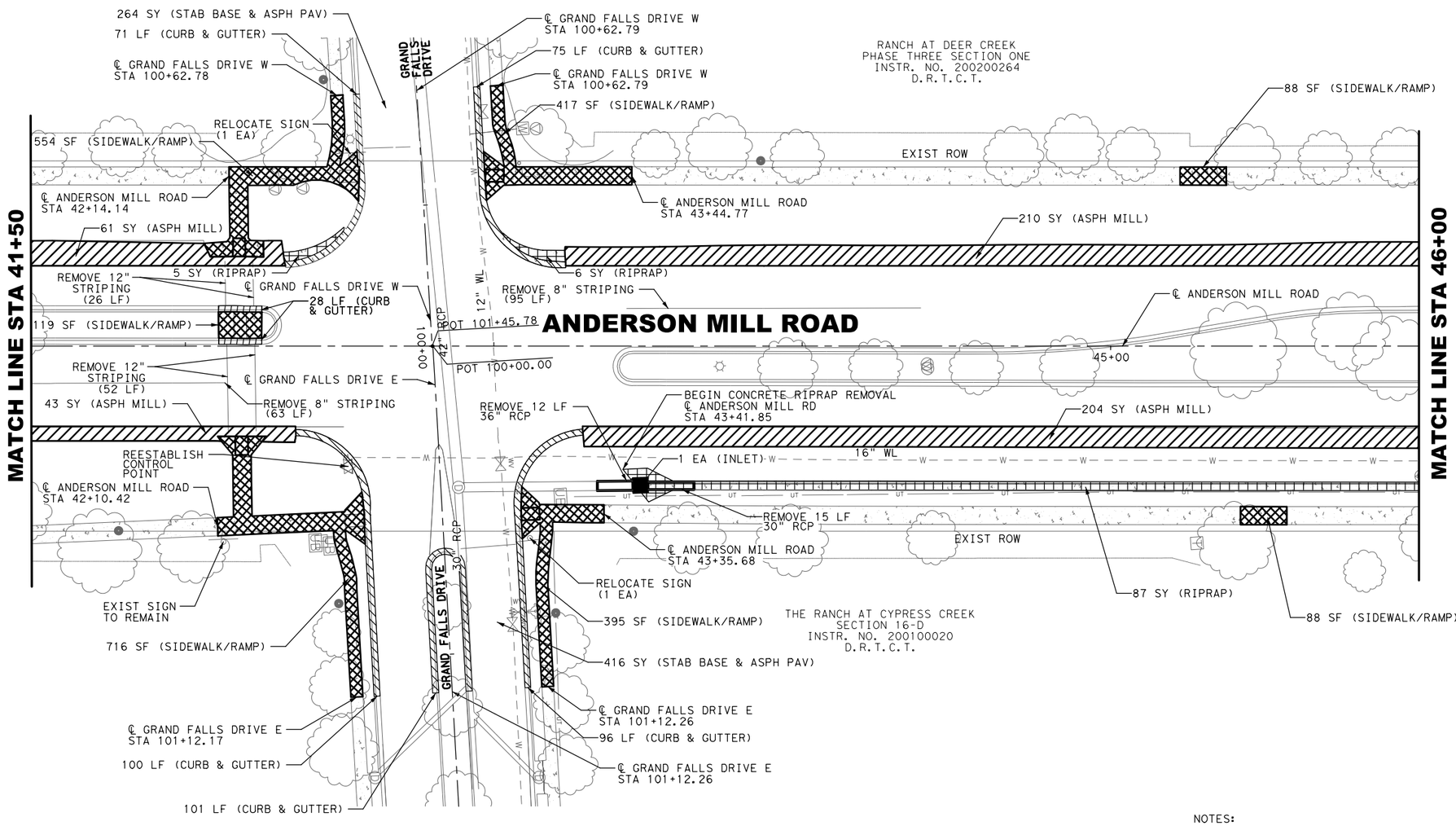

0′ 10′ 20′ 40′
SCALE: 1"=40′

LEGEND

- ASPHALT SURFACE MILLING (6")
- REMOVE STAB BASE & ASPH PV (17")
- CONCRETE SIDEWALK AND PEDESTRIAN RAMP REMOVAL
- CONCRETE CURB & GUTTER REMOVAL
- CONCRETE RIPRAP REMOVAL
- INLET REMOVAL

NOTES:

1. REMOVAL OF OUTSIDE LANE PAVEMENT STRIPING NOT ELIMINATED DURING SAWCUT/PAVEMENT REMOVAL OPERATIONS, SUBSIDIARY TO ASPHALT PAVEMENT REMOVAL.
2. SEE SIGNING AND STRIPING PLANS FOR EXISTING SIGN RELOCATIONS.
3. REFER TO ROADWAY PLAN & PROFILES AND TYPICAL SECTION SHEETS FOR EXISTING ASPHALT SAW CUT LIMITS.
4. KEEP ALL SIDEWALKS IN PLACE UNTIL CONFLICTING AREAS ARE REACHED.

NUMBER	DATE	REVISION	APPROVED

STATE OF TEXAS
GREGORY C. CALKINS
111309
LICENSED
PROFESSIONAL ENGINEER
6/30/2021

Binkley & Barfield, Inc
consulting engineers
Texas Registration Number F-257

CEDAR PARK

ANDERSON MILL ROAD
EXISTING CONDITIONS AND REMOVAL PLANS
STA 41+50 - STA 46+00

DESIGN BY:	GCC	SCALE:	1"=40′
DRAWN BY:	DSH		
CHECKED BY:	BMB	SHEET:	8 OF 14
APPROVED BY:	BDR		
PROJECT NO:	156402	PAGE:	28
DATE:	6/30/2021		

6/30/2021
3:39:31 PM
T:\156402*Anderson*Mill*Road\CADD\SHEETS\RDDM1*AM*08.dgn

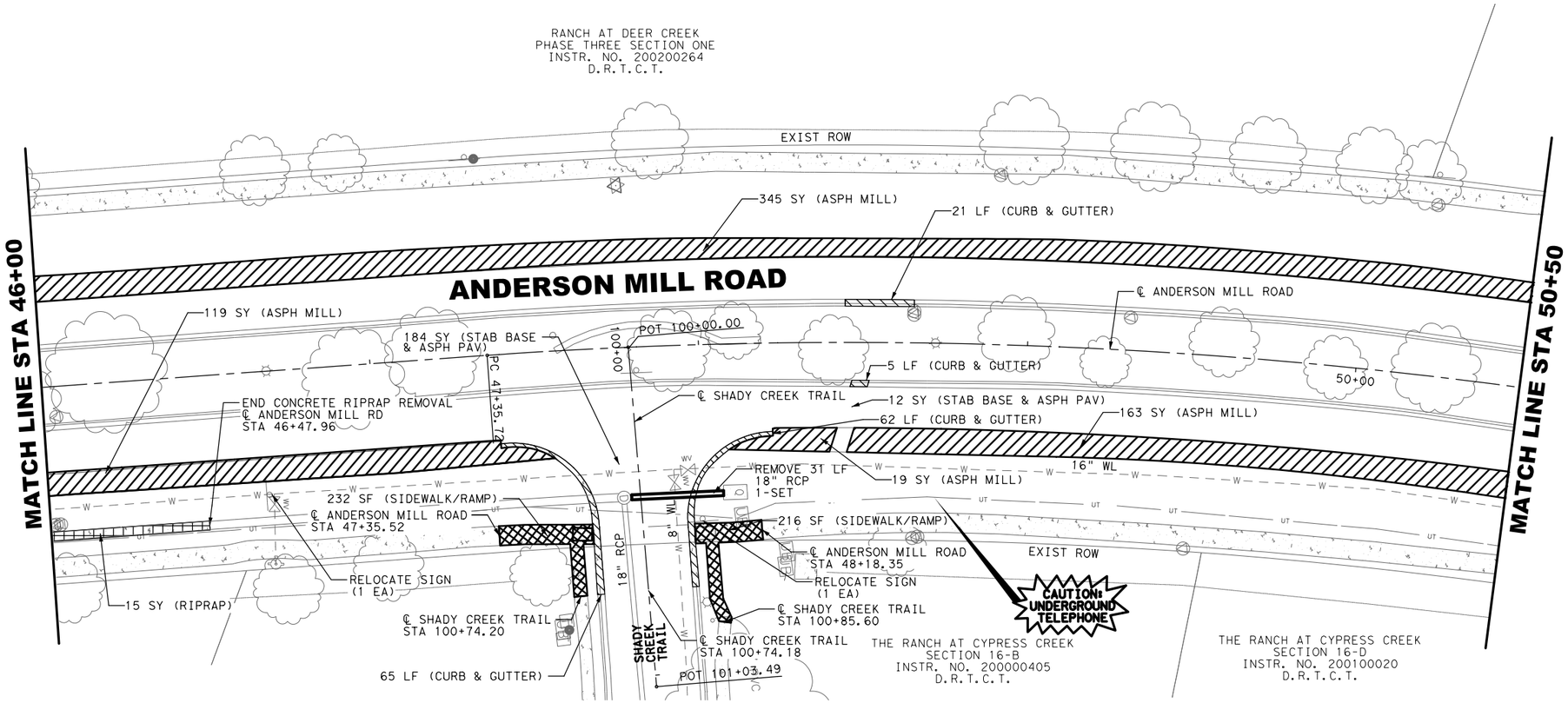

0′ 10′ 20′ 40′
SCALE: 1"=40′

LEGEND

- ASPHALT SURFACE MILLING (6")
- REMOVE STAB BASE & ASPH PV (17")
- CONCRETE SIDEWALK AND PEDESTRIAN RAMP REMOVAL
- CONCRETE CURB & GUTTER REMOVAL
- CONCRETE RIPRAP REMOVAL
- INLET REMOVAL

NOTES:

1. REMOVAL OF OUTSIDE LANE PAVEMENT STRIPING NOT ELIMINATED DURING SAWCUT/PAVEMENT REMOVAL OPERATIONS, SUBSIDIARY TO ASPHALT PAVEMENT REMOVAL.
2. SEE SIGNING AND STRIPING PLANS FOR EXISTING SIGN RELOCATIONS.
3. REFER TO ROADWAY PLAN & PROFILES AND TYPICAL SECTION SHEETS FOR EXISTING ASPHALT SAW CUT LIMITS.
4. KEEP ALL SIDEWALKS IN PLACE UNTIL CONFLICTING AREAS ARE REACHED.

NUMBER	DATE	REVISION	APPROVED

STATE OF TEXAS
GREGORY C. CALKINS
111309
LICENSED
PROFESSIONAL ENGINEER
6/30/2021

Binkley & Barfield, Inc
consulting engineers
Texas Registration Number F-257

CEDAR PARK

ANDERSON MILL ROAD
EXISTING CONDITIONS AND REMOVAL PLANS
STA 46+00 - STA 50+50

DESIGN BY:	GCC	SCALE:	1"=40′
DRAWN BY:	DSH		
CHECKED BY:	BMB	SHEET:	9 OF 14
APPROVED BY:	BDR		
PROJECT NO:	156402	PAGE:	29
DATE:	6/30/2021		

6/30/2021
3:39:32 PM
T:\156402*Anderson*Mill*Road\CADD\SHEETS\RDDM1*AM*09.dgn

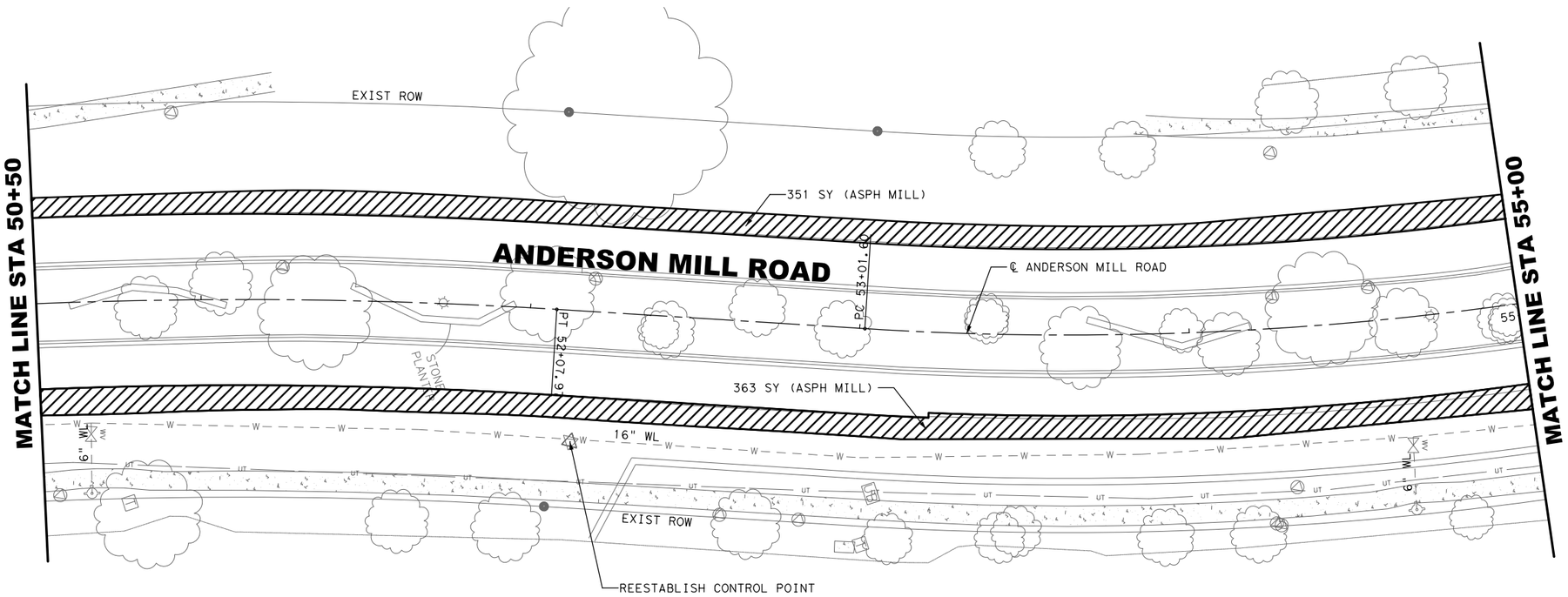

THE RANCH AT CYPRESS CREEK
SECTION 16-D
INSTR. NO. 200100020
D.R.T.C.T.

0' 10' 20' 40'
SCALE: 1"=40'

LEGEND

- ASPHALT SURFACE MILLING (6")
- REMOVE STAB BASE & ASPH PV (17")
- CONCRETE SIDEWALK AND PEDESTRIAN RAMP REMOVAL
- CONCRETE CURB & GUTTER REMOVAL
- CONCRETE RIPRAP REMOVAL
- INLET REMOVAL

NOTES:

1. REMOVAL OF OUTSIDE LANE PAVEMENT STRIPING NOT ELIMINATED DURING SAWCUT/PAVEMENT REMOVAL OPERATIONS, SUBSIDIARY TO ASPHALT PAVEMENT REMOVAL.
2. SEE SIGNING AND STRIPING PLANS FOR EXISTING SIGN RELOCATIONS.
3. REFER TO ROADWAY PLAN & PROFILES AND TYPICAL SECTION SHEETS FOR EXISTING ASPHALT SAW CUT LIMITS.
4. KEEP ALL SIDEWALKS IN PLACE UNTIL CONFLICTING AREAS ARE REACHED.

NUMBER	DATE	REVISION	APPROVED

STATE OF TEXAS
GREGORY C. CALKINS
111309
LICENSED
PROFESSIONAL ENGINEER
6/30/2021

Binkley & Barfield, Inc
consulting engineers
Texas Registration Number F-257

CEDAR PARK

ANDERSON MILL ROAD

EXISTING CONDITIONS AND REMOVAL PLANS

STA 50+50 - STA 55+00

DESIGN BY:	GCC	SCALE:	1"=40'
DRAWN BY:	DSH		
CHECKED BY:	BMB		
APPROVED BY:	BDR	SHEET:	10 OF 14
PROJECT NO:	156402		
DATE:	6/30/2021	PAGE:	30

6/30/2021
3:39:33 PM
I:\156402*Anderson*Mill*Road\CADD\SHEETS\RDDM1*AM*10.dgn

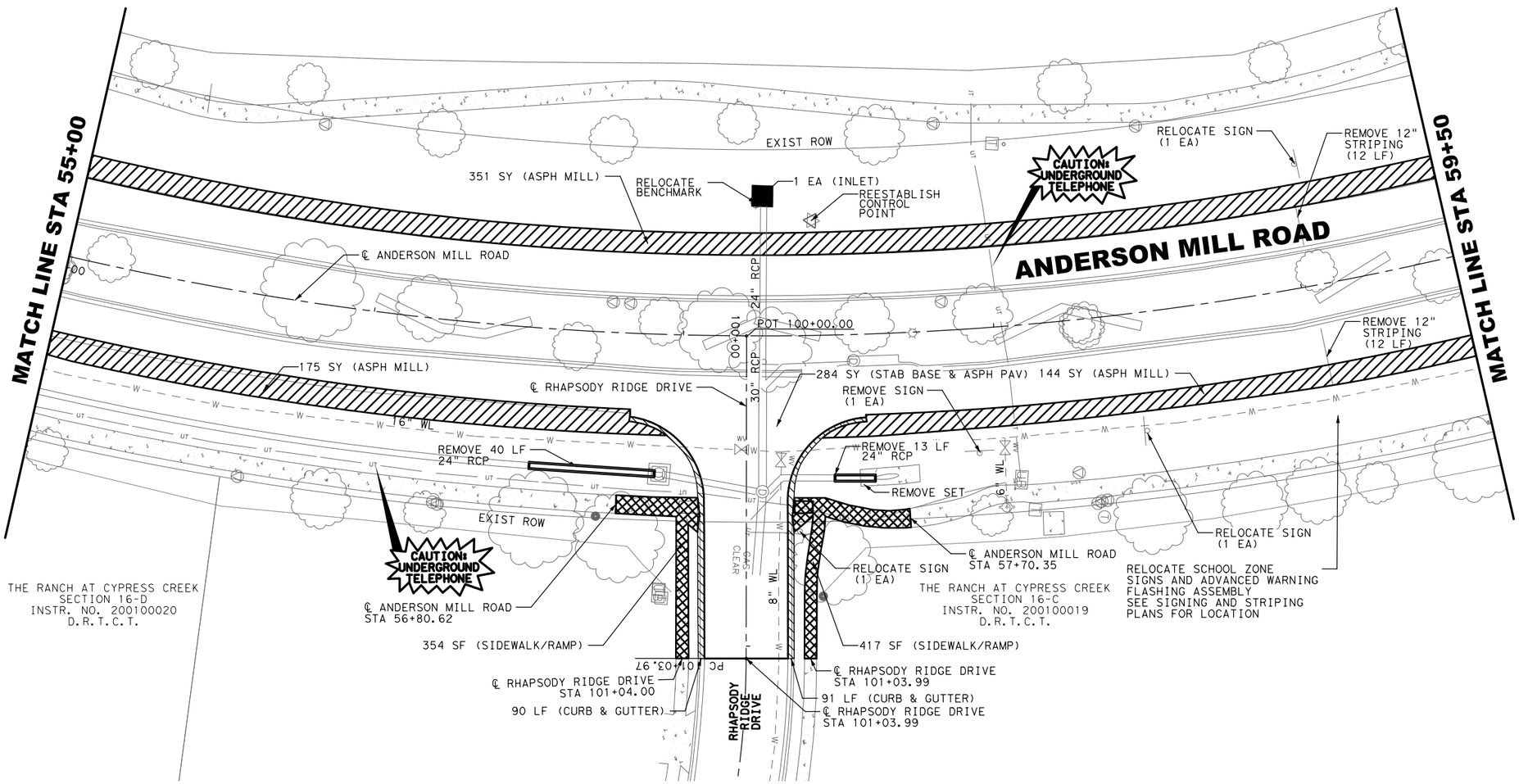

0′ 10′ 20′ 40′
SCALE: 1"=40′

LEGEND

- ASPHALT SURFACE MILLING (6")
- REMOVE STAB BASE & ASPH PV (17")
- CONCRETE SIDEWALK AND PEDESTRIAN RAMP REMOVAL
- CONCRETE CURB & GUTTER REMOVAL
- CONCRETE RIPRAP REMOVAL
- INLET REMOVAL

NOTES:

1. REMOVAL OF OUTSIDE LANE PAVEMENT STRIPING NOT ELIMINATED DURING SAWCUT/PAVEMENT REMOVAL OPERATIONS, SUBSIDIARY TO ASPHALT PAVEMENT REMOVAL.
2. SEE SIGNING AND STRIPING PLANS FOR EXISTING SIGN RELOCATIONS.
3. REFER TO ROADWAY PLAN & PROFILES AND TYPICAL SECTION SHEETS FOR EXISTING ASPHALT SAW CUT LIMITS.
4. KEEP ALL SIDEWALKS IN PLACE UNTIL CONFLICTING AREAS ARE REACHED.

NUMBER	DATE	REVISION	APPROVED

STATE OF TEXAS
GREGORY C. CALKINS
111309
LICENSED
PROFESSIONAL ENGINEER
6/30/2021

Binkley & Barfield, Inc
consulting engineers
Texas Registration Number F-257

CEDAR PARK

ANDERSON MILL ROAD

EXISTING CONDITIONS AND REMOVAL PLANS

STA 55+00 - STA 59+50

DESIGN BY:	GCC	SCALE:	1"=40′
DRAWN BY:	DSH		
CHECKED BY:	BMB	SHEET:	11 OF 14
APPROVED BY:	BDR		
PROJECT NO:	156402	PAGE:	31
DATE:	6/30/2021		

6/30/2021
3:39:34 PM
I:\156402*Anderson*Mill*Road\CADD\SHEETS\RDDM1*AM*11.dgn

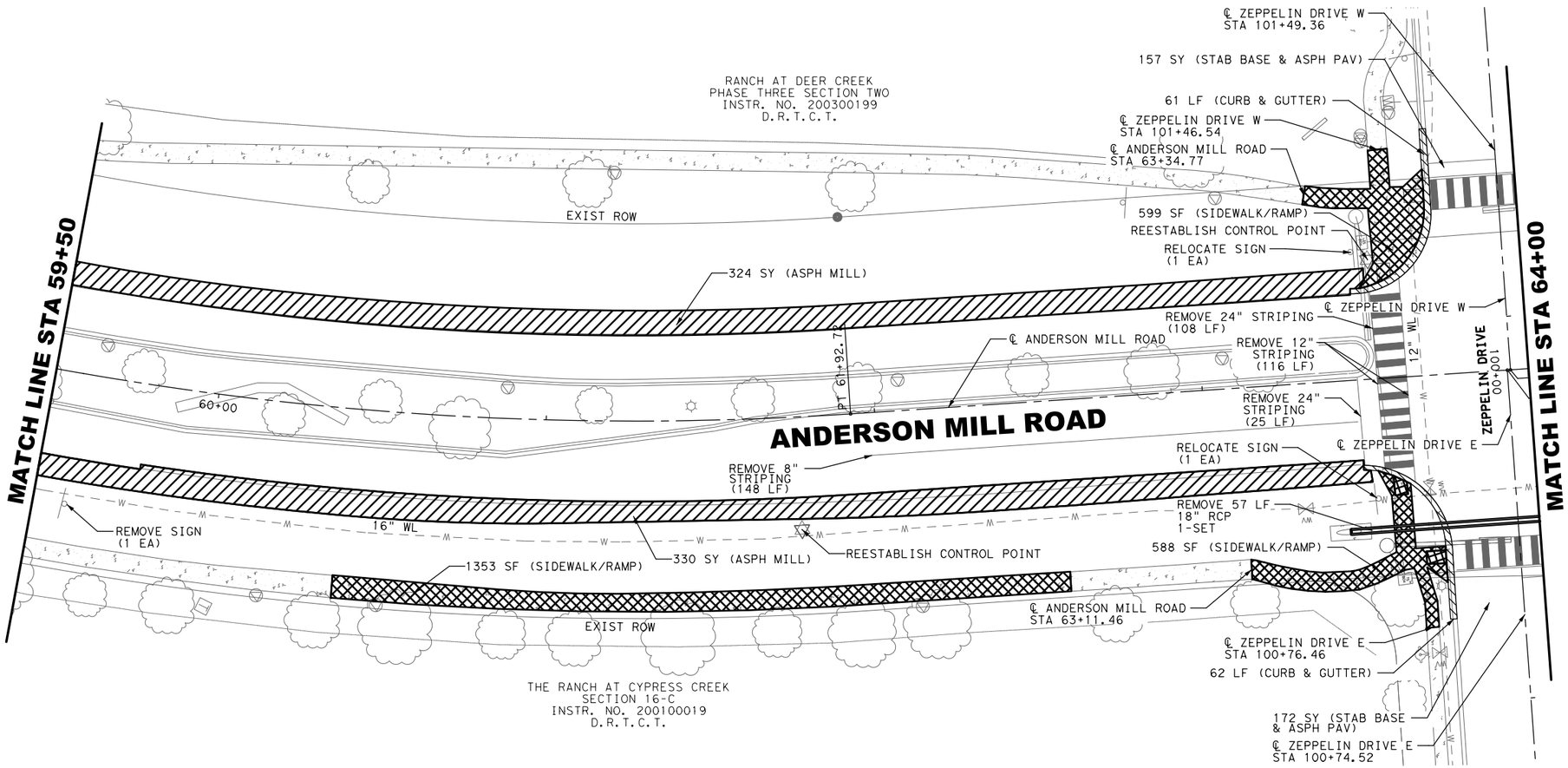

0′ 10′ 20′ 40′
SCALE: 1"=40′

LEGEND

- ASPHALT SURFACE MILLING (6")
- REMOVE STAB BASE & ASPH PV (17")
- CONCRETE SIDEWALK AND PEDESTRIAN RAMP REMOVAL
- CONCRETE CURB & GUTTER REMOVAL
- CONCRETE RIPRAP REMOVAL
- INLET REMOVAL

NOTES:

1. REMOVAL OF OUTSIDE LANE PAVEMENT STRIPING NOT ELIMINATED DURING SAWCUT/PAVEMENT REMOVAL OPERATIONS, SUBSIDIARY TO ASPHALT PAVEMENT REMOVAL.
2. SEE SIGNING AND STRIPING PLANS FOR EXISTING SIGN RELOCATIONS.
3. REFER TO ROADWAY PLAN & PROFILES AND TYPICAL SECTION SHEETS FOR EXISTING ASPHALT SAW CUT LIMITS.
4. KEEP ALL SIDEWALKS IN PLACE UNTIL CONFLICTING AREAS ARE REACHED.

NUMBER	DATE	REVISION	APPROVED

STATE OF TEXAS
GREGORY C. CALKINS
111309
LICENSED
PROFESSIONAL ENGINEER
6/30/2021

Binkley & Barfield, Inc
consulting engineers
Texas Registration Number F-257

CEDAR PARK

ANDERSON MILL ROAD
EXISTING CONDITIONS AND REMOVAL PLANS
STA 59+50 - STA 64+00

DESIGN BY:	GCC	SCALE:	1"=40′
DRAWN BY:	DSH		
CHECKED BY:	BMB		
APPROVED BY:	BDR	SHEET:	12 OF 14
PROJECT NO:	156402		
DATE:	6/30/2021	PAGE:	32

6/30/2021
3:39:35 PM
T:\156402*Anderson*Mill*Road\CADD\SHEETS\RDDM1*AM*12.dgn

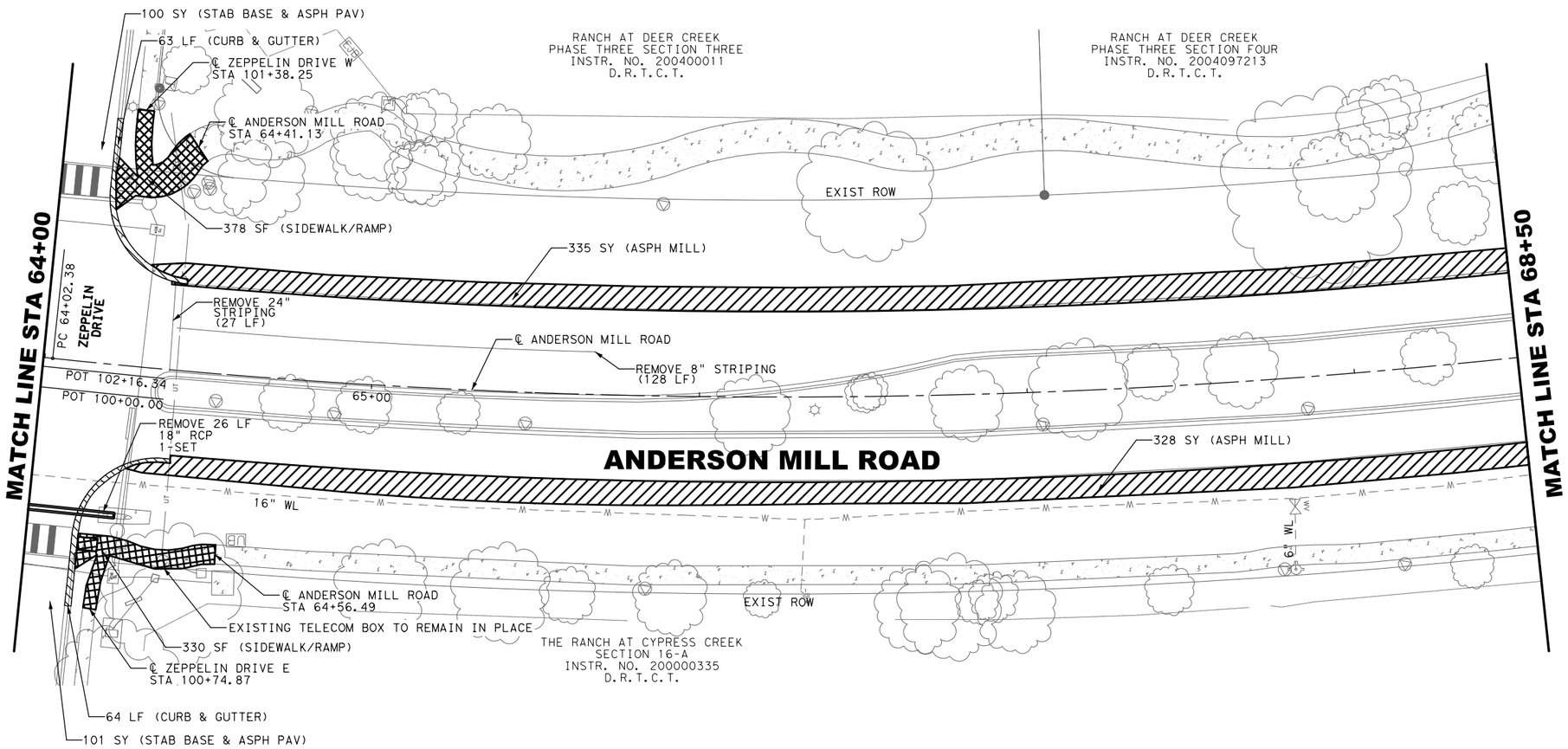

0′ 10′ 20′ 40′
SCALE: 1"=40′

LEGEND

- ASPHALT SURFACE MILLING (6")
- REMOVE STAB BASE & ASPH PV (17")
- CONCRETE SIDEWALK AND PEDESTRIAN RAMP REMOVAL
- CONCRETE CURB & GUTTER REMOVAL
- CONCRETE RIPRAP REMOVAL
- INLET REMOVAL

NOTES:

1. REMOVAL OF OUTSIDE LANE PAVEMENT STRIPING NOT ELIMINATED DURING SAWCUT/PAVEMENT REMOVAL OPERATIONS, SUBSIDIARY TO ASPHALT PAVEMENT REMOVAL.
2. SEE SIGNING AND STRIPING PLANS FOR EXISTING SIGN RELOCATIONS.
3. REFER TO ROADWAY PLAN & PROFILES AND TYPICAL SECTION SHEETS FOR EXISTING ASPHALT SAW CUT LIMITS.
4. KEEP ALL SIDEWALKS IN PLACE UNTIL CONFLICTING AREAS ARE REACHED.

NUMBER	DATE	REVISION	APPROVED

STATE OF TEXAS
GREGORY C. CALKINS
111309
LICENSED
PROFESSIONAL ENGINEER
6/30/2021

Binkley & Barfield, Inc
consulting engineers
Texas Registration Number F-257

CEDAR PARK

ANDERSON MILL ROAD
EXISTING CONDITIONS AND REMOVAL PLANS
STA 64+00 - STA 68+50

DESIGN BY:	GCC	SCALE:	1"=40′
DRAWN BY:	DSH		
CHECKED BY:	BMB	SHEET:	13 OF 14
APPROVED BY:	BDR		
PROJECT NO:	156402	PAGE:	33
DATE:	6/30/2021		

6/30/2021
3:39:36 PM
T:\156402*Anderson*Mill*Road\CADD\SHEETS\RDDM1*AM*13.dgn

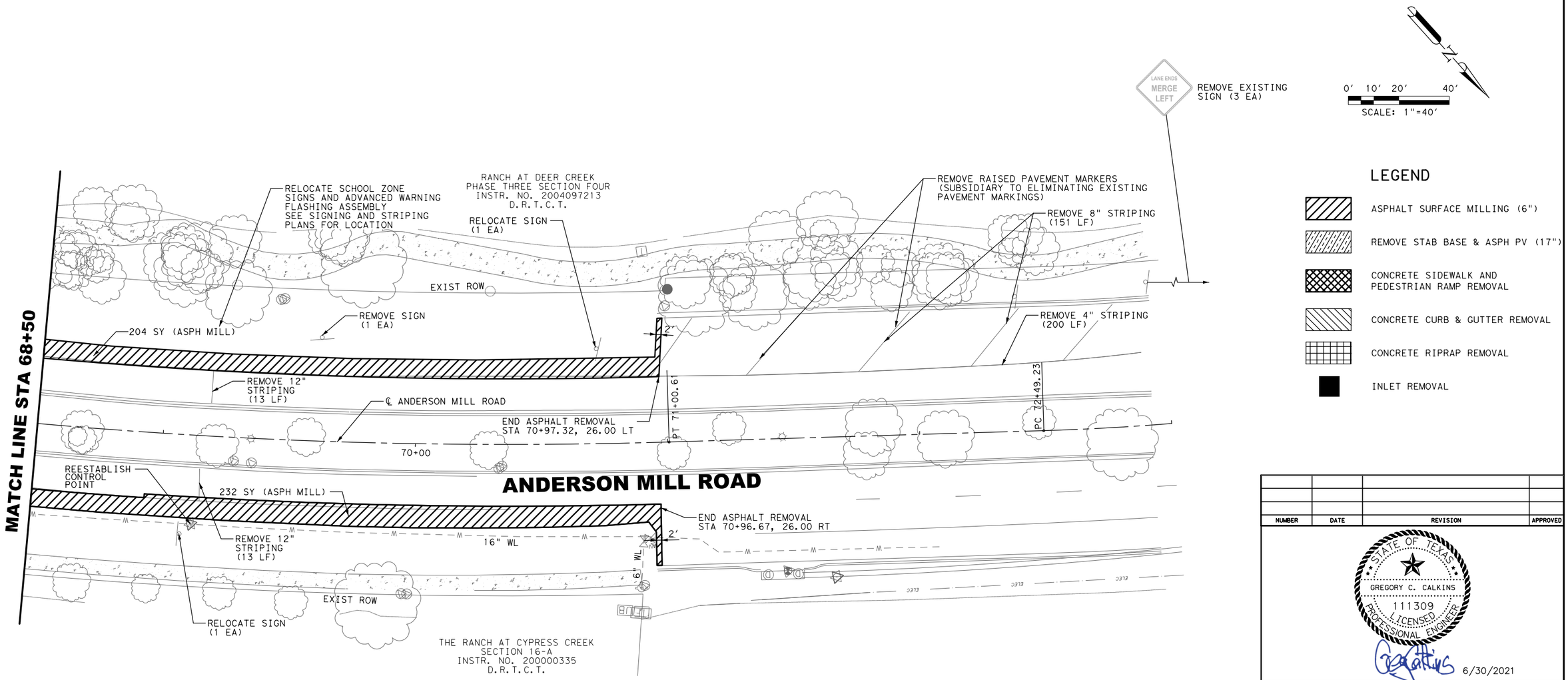

NOTES:

1. REMOVAL OF OUTSIDE LANE PAVEMENT STRIPING NOT ELIMINATED DURING SAWCUT/PAVEMENT REMOVAL OPERATIONS, SUBSIDIARY TO ASPHALT PAVEMENT REMOVAL.
2. SEE SIGNING AND STRIPING PLANS FOR EXISTING SIGN RELOCATIONS.
3. REFER TO ROADWAY PLAN & PROFILES AND TYPICAL SECTION SHEETS FOR EXISTING ASPHALT SAW CUT LIMITS.
4. KEEP ALL SIDEWALKS IN PLACE UNTIL CONFLICTING AREAS ARE REACHED.

NUMBER	DATE	REVISION	APPROVED

STATE OF TEXAS
GREGORY C. CALKINS
111309
LICENSED
PROFESSIONAL ENGINEER
6/30/2021

Binkley & Barfield, Inc
consulting engineers
Texas Registration Number F-257

CEDAR PARK

ANDERSON MILL ROAD

EXISTING CONDITIONS AND REMOVAL PLANS

STA 68+50 TO END OF PROJECT

DESIGN BY:	GCC	SCALE:	1"=40'
DRAWN BY:	DSH		
CHECKED BY:	BMB		
APPROVED BY:	BDR	SHEET:	14 OF 14
PROJECT NO:	156402		
DATE:	6/30/2021	PAGE:	34

6/30/2021
3:39:37 PM
T:\156402*Anderson*Mill*Road\CADD\SHEETS\RDDM1*AM*14.dgn

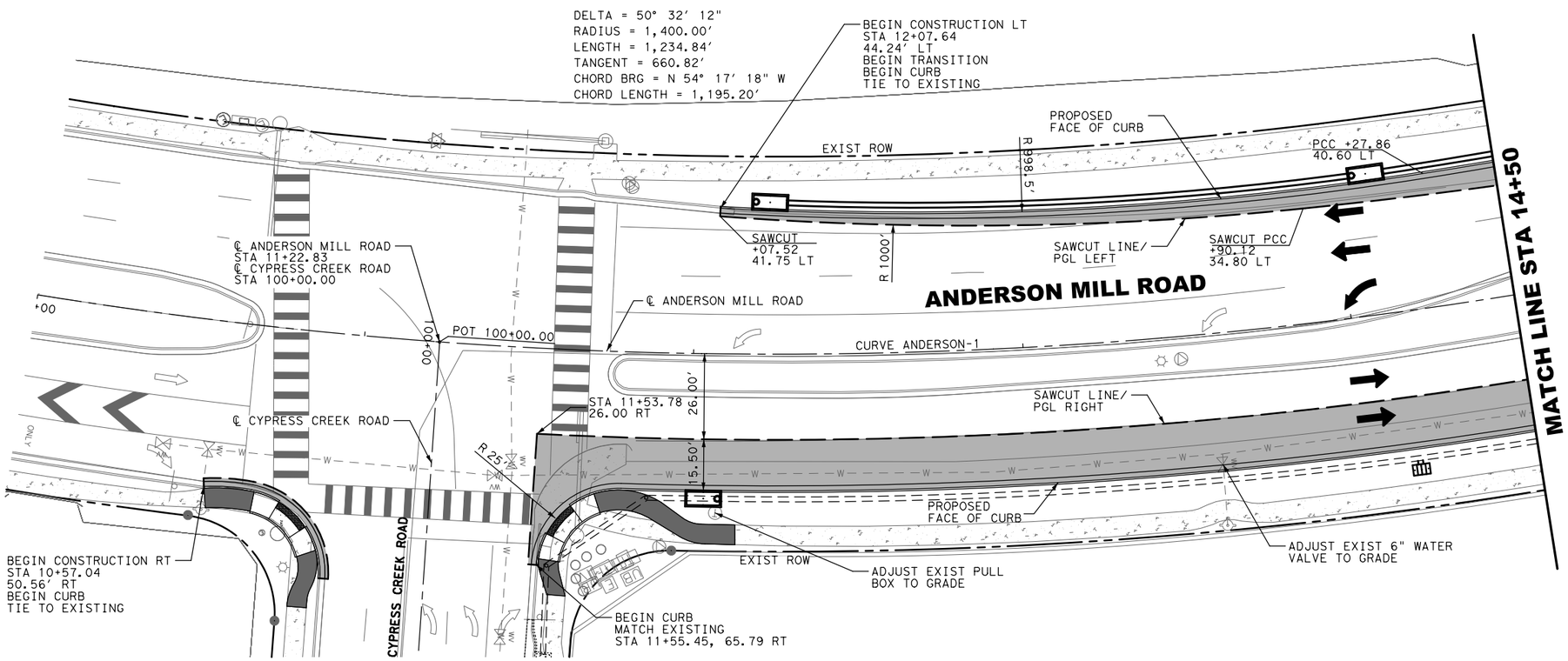

LEGEND

- PROPOSED WIDENING
- PROPOSED 4" SIDEWALK

NOTES:

1. UNLESS OTHERWISE NOTED, DIMENSIONS AND PAVING POINTS ARE GIVEN TO NOMINAL FACE OF CURB.
2. SEE SIDEWALK AND PEDESTRIAN RAMP PLANS FOR SIDEWALK DETAILS.

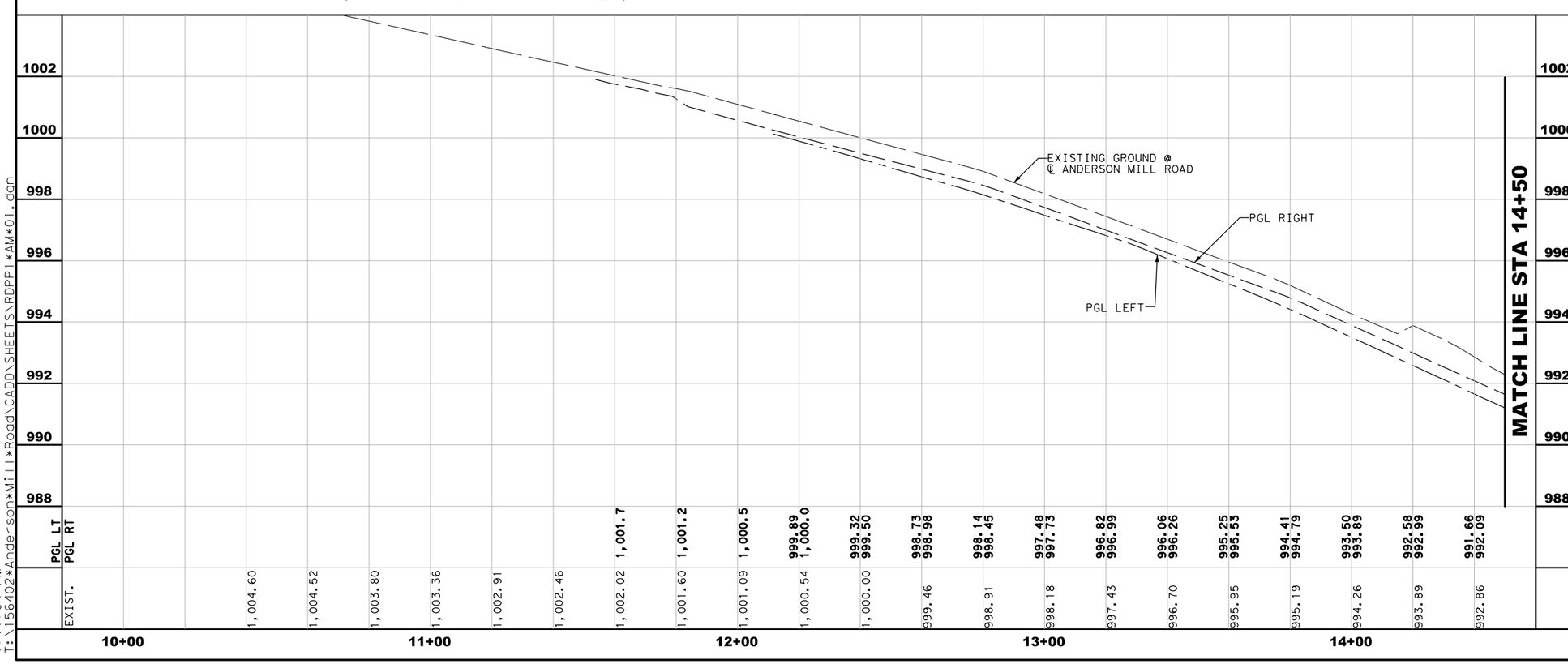

NUMBER	DATE	REVISION	APPROVED

STATE OF TEXAS
GREGORY C. CALKINS
111309
LICENSED
PROFESSIONAL ENGINEER
9/28/2020

Binkley & Barfield, Inc
consulting engineers
Texas Registration Number F-257

CEDAR PARK

ANDERSON MILL ROAD
PLAN AND PROFILE
STA 10+00 - STA 14+50

DESIGN BY: GCC
DRAWN BY: DSH
CHECKED BY: BMB
APPROVED BY: BDR
PROJECT NO: 156402
DATE: 9/28/2020

SCALE:
HORIZ: 1"=40′
VERT: 1"= 4′

SHEET: 1 OF 14

PAGE: 35

9/28/2020
1:17:04 PM
T:\156402*AndersonMill*Road\CADD\SHEETS\RDPP1*AM*01.dgn

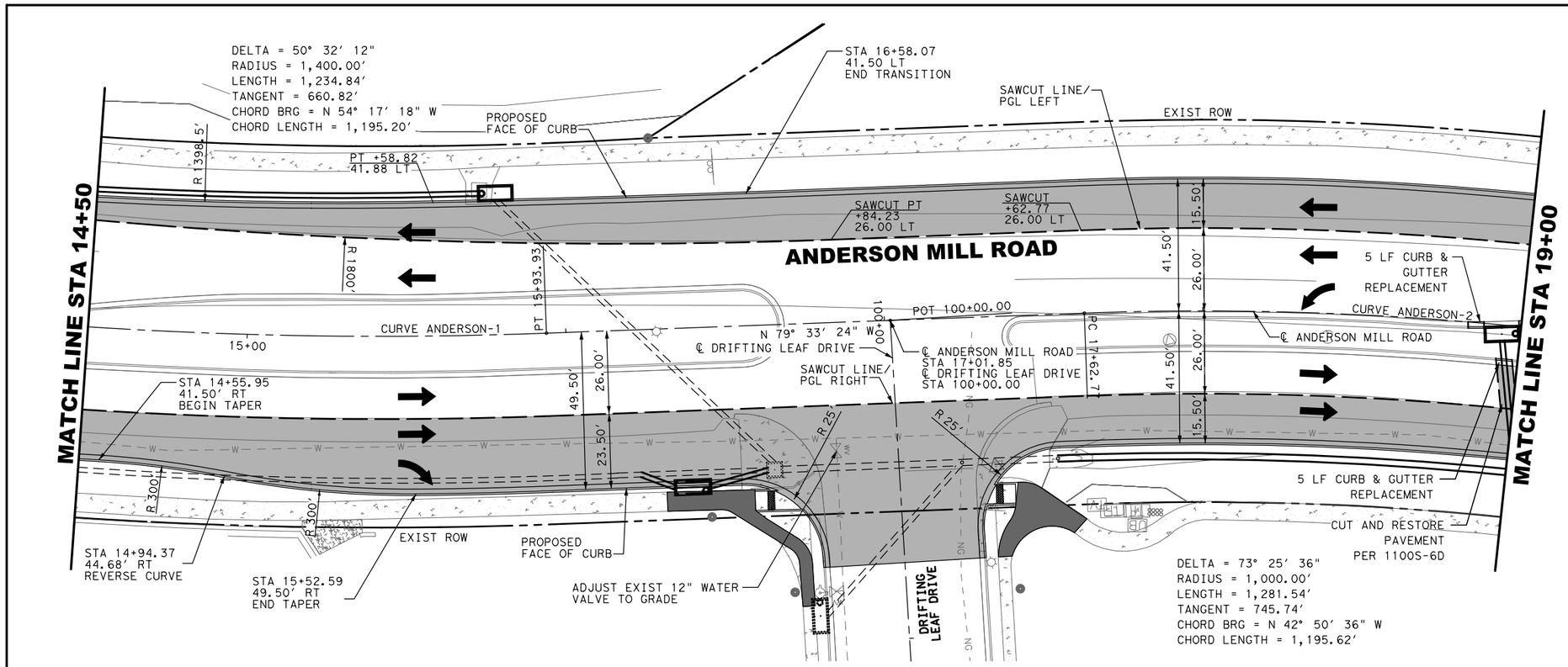

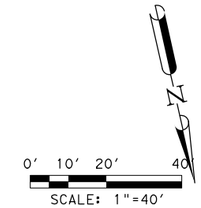

LEGEND

- PROPOSED WIDENING
- PROPOSED 4" SIDEWALK

NOTES:

1. UNLESS OTHERWISE NOTED, DIMENSIONS AND PAVING POINTS ARE GIVEN TO NOMINAL FACE OF CURB.
2. SEE SIDEWALK AND PEDESTRIAN RAMP PLANS FOR SIDEWALK DETAILS.

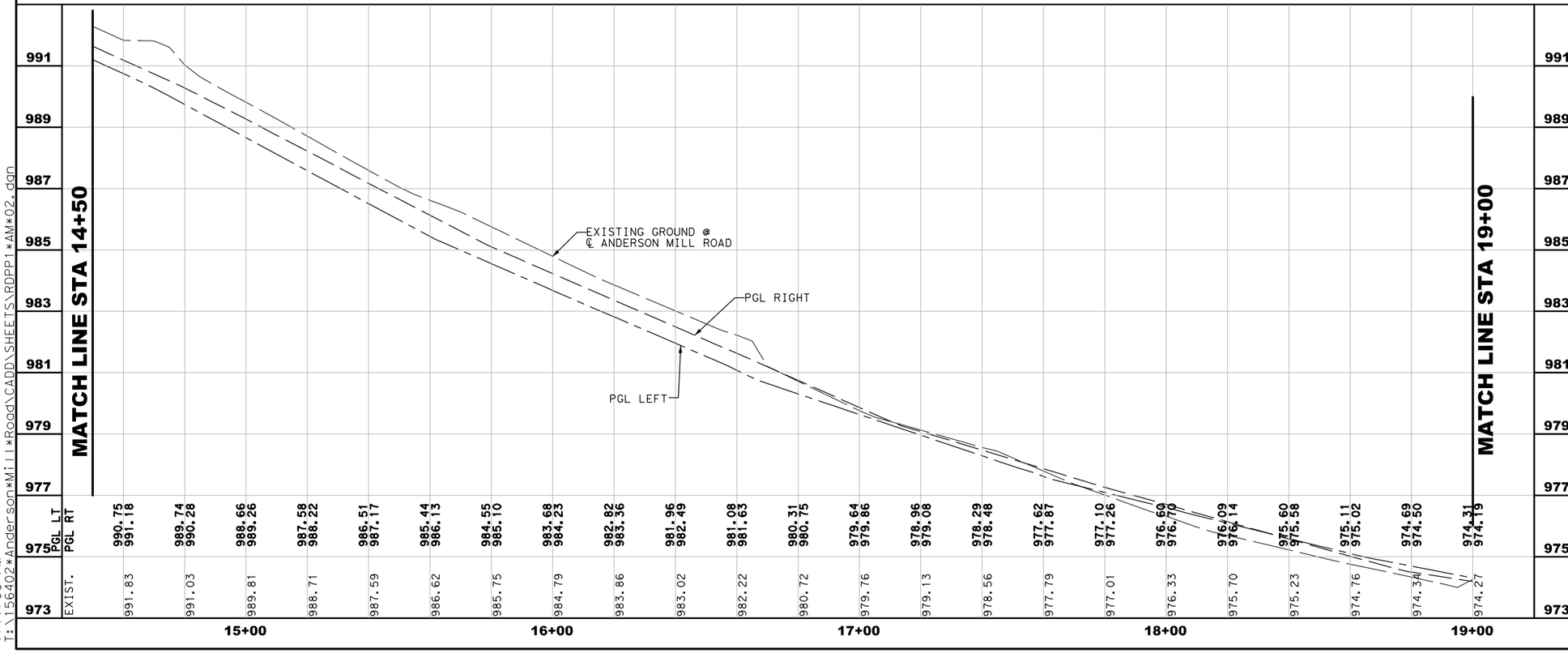

NUMBER	DATE	REVISION	APPROVED

STATE OF TEXAS
GREGORY C. CALKINS
111309
LICENSED
PROFESSIONAL ENGINEER
9/28/2020

Binkley & Barfield, Inc
consulting engineers
Texas Registration Number F-257

CEDAR PARK

ANDERSON MILL ROAD
PLAN AND PROFILE
STA 14+50 - STA 19+00

DESIGN BY:	GCC	SCALE: HORIZ: 1"=40′ VERT: 1"= 4′	
DRAWN BY:	DSH		
CHECKED BY:	BMB		
APPROVED BY:	BDR	SHEET: 2 OF 14	
PROJECT NO:	156402		
DATE:	9/28/2020	PAGE: 36	

9/28/2020
1:17:06 PM
T:\156402*Anderson*Mill*Road\CADD\SHEETS\RDPP1*AM*02.dgn

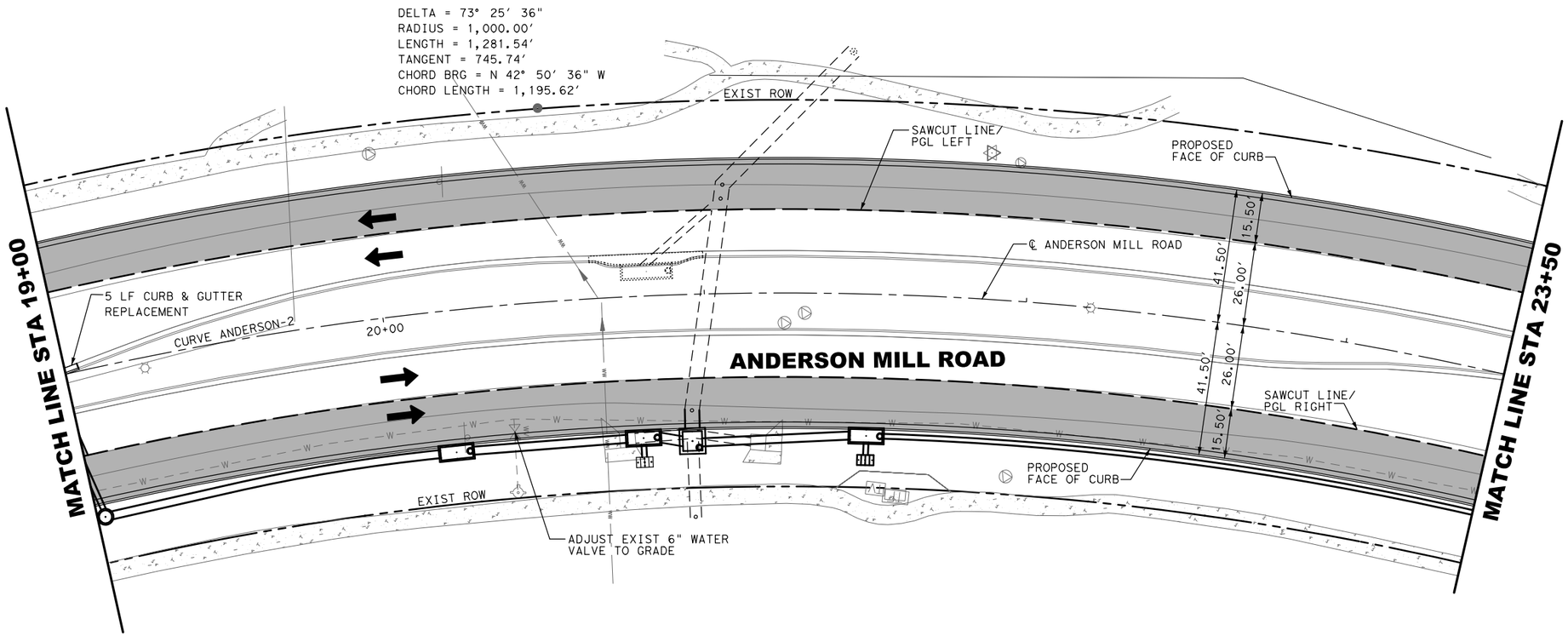

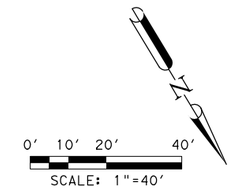

LEGEND

- PROPOSED WIDENING
- PROPOSED 4" SIDEWALK

NOTES:

1. UNLESS OTHERWISE NOTED, DIMENSIONS AND PAVING POINTS ARE GIVEN TO NOMINAL FACE OF CURB.
2. SEE SIDEWALK AND PEDESTRIAN RAMP PLANS FOR SIDEWALK DETAILS.

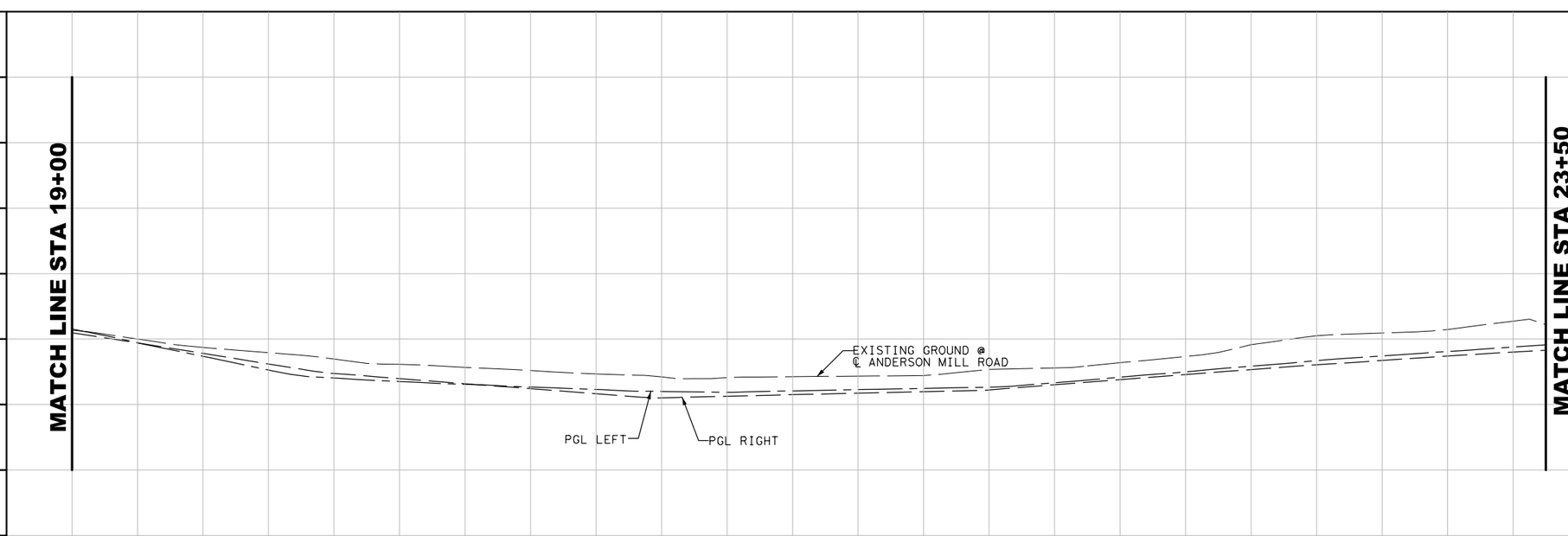

	EXIST.	19+00		20+00		21+00		22+00		23+00
PGL LT	974.27	974.31	973.89	973.47	973.06	972.81	972.70	972.62	972.53	972.46
PGL RT		974.19	973.88	973.56	973.24	972.95	972.79	972.64	972.49	972.33

	EXIST.	19+00		20+00		21+00		22+00		23+00
PGL LT	972.40	972.38	972.42	972.46	972.49	972.53	972.67	972.84	973.00	973.17
PGL RT	972.21	972.25	972.30	972.35	972.39	972.45	972.60	972.76	972.92	973.07

	EXIST.	19+00		20+00		21+00		22+00		23+00
PGL LT	973.34	973.49	973.62	973.76						
PGL RT	973.22	973.35	973.48	973.60						

	EXIST.	19+00		20+00		21+00		22+00		23+00
	972.85	972.82	972.85	972.87	972.89	973.07	973.12	973.28	973.47	973.83
	974.10	974.18	974.29	974.55						

NUMBER	DATE	REVISION	APPROVED

STATE OF TEXAS
GREGORY C. CALKINS
111309
LICENSED
PROFESSIONAL ENGINEER
9/28/2020

Binkley & Barfield, Inc
consulting engineers
Texas Registration Number F-257

CEDAR PARK

ANDERSON MILL ROAD
PLAN AND PROFILE
STA 19+00 - STA 23+50

DESIGN BY:	GCC	SCALE:	HORIZ: 1"=40′ VERT: 1"= 4′
DRAWN BY:	DSH		
CHECKED BY:	BMB	SHEET:	3 OF 14
APPROVED BY:	BDR		
PROJECT NO:	156402	PAGE:	37
DATE:	9/28/2020		

9/28/2020
1:17:10 PM
T:\156402*Anderson*Mill*Road\CADD\SHEETS\RDPP1*AM*03.dgn

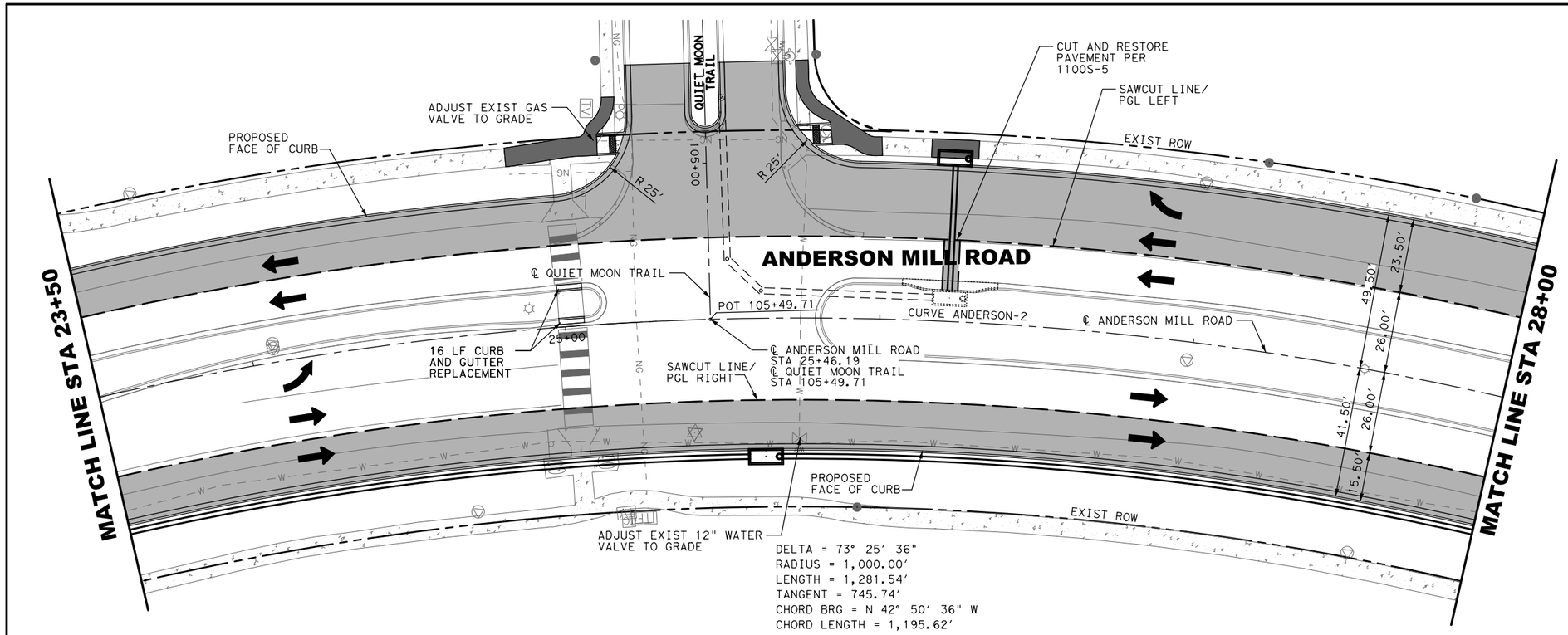

0' 10' 20' 40'
SCALE: 1"=40'

LEGEND

- PROPOSED WIDENING
- PROPOSED 4" SIDEWALK

NOTES:

1. UNLESS OTHERWISE NOTED, DIMENSIONS AND PAVING POINTS ARE GIVEN TO NOMINAL FACE OF CURB.
2. SEE SIDEWALK AND PEDESTRIAN RAMP PLANS FOR SIDEWALK DETAILS.

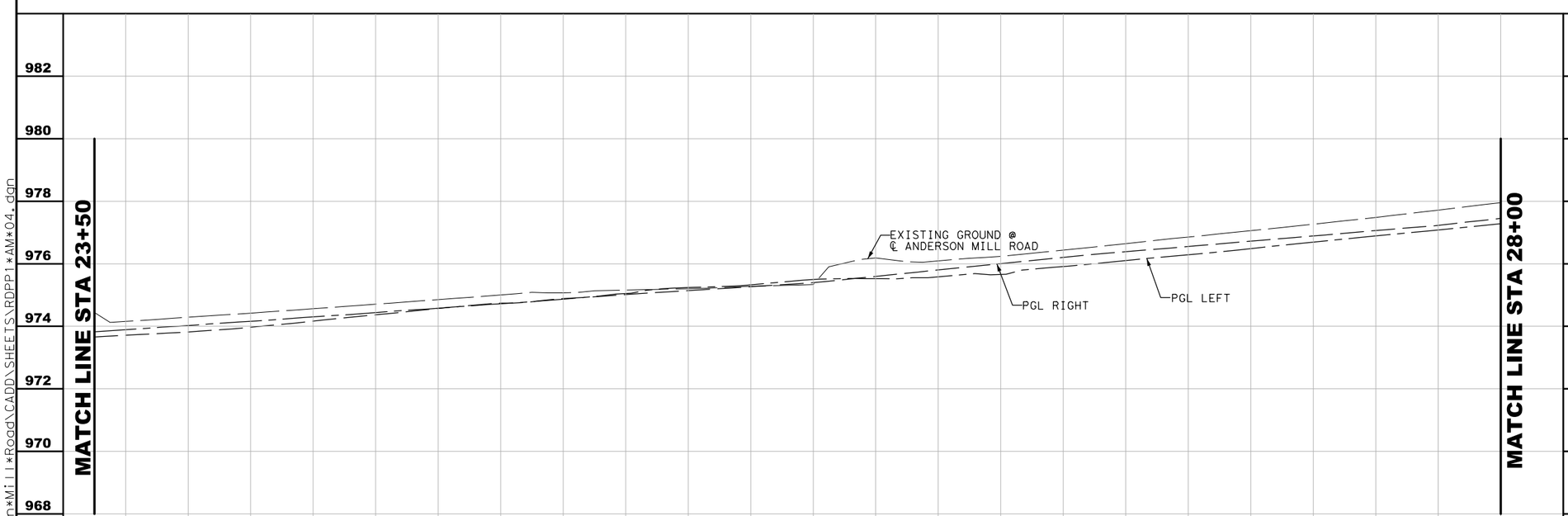

	PGL LT	PGL RT	EXIST.
	973.89	973.71	974.16
	974.03	973.82	974.29
	974.16	973.97	974.42
	974.30	974.16	974.56
	974.44	974.37	974.71
	974.58	974.57	974.85
	974.72	974.74	975.00
	974.87	974.89	975.07
	975.05	975.02	975.16
	975.24	975.14	975.20
	975.33	975.27	975.28
	975.50	975.40	975.34
	975.53	975.59	976.19
	975.58	975.80	976.09
	975.66	976.01	976.24
	975.91	976.20	976.44
	976.10	976.39	976.64
	976.29	976.55	976.85
	976.48	976.72	977.06
	976.69	976.89	977.27
	976.89	977.06	977.48
	977.08	977.23	977.72
	977.28	977.45	977.95

24+00 25+00 26+00 27+00 28+00

NUMBER	DATE	REVISION	APPROVED

STATE OF TEXAS
GREGORY C. CALKINS
111309
LICENSED
PROFESSIONAL ENGINEER
9/28/2020

Binkley & Barfield, Inc
consulting engineers
Texas Registration Number F-257

CEDAR PARK

ANDERSON MILL ROAD
PLAN AND PROFILE
STA 23+50 - STA 28+00

DESIGN BY:	GCC
DRAWN BY:	DSH
CHECKED BY:	BMB
APPROVED BY:	BDR
PROJECT NO:	156402
DATE:	9/28/2020

SCALE:
HORIZ: 1"=40'
VERT: 1"= 4'

SHEET: 4 OF 14

PAGE: 38

9/28/2020
1:17:14 PM
T:\156402*Anderson*Mill*Road\CADD\SHEETS\RDPP1*AM*04.dgn

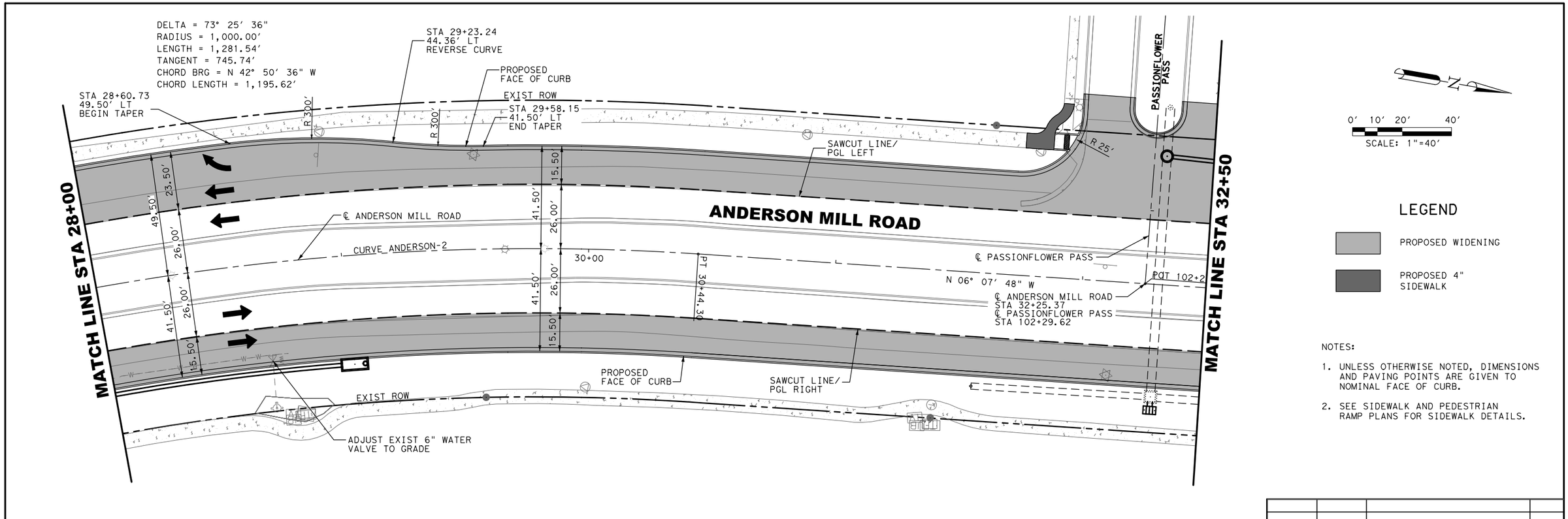

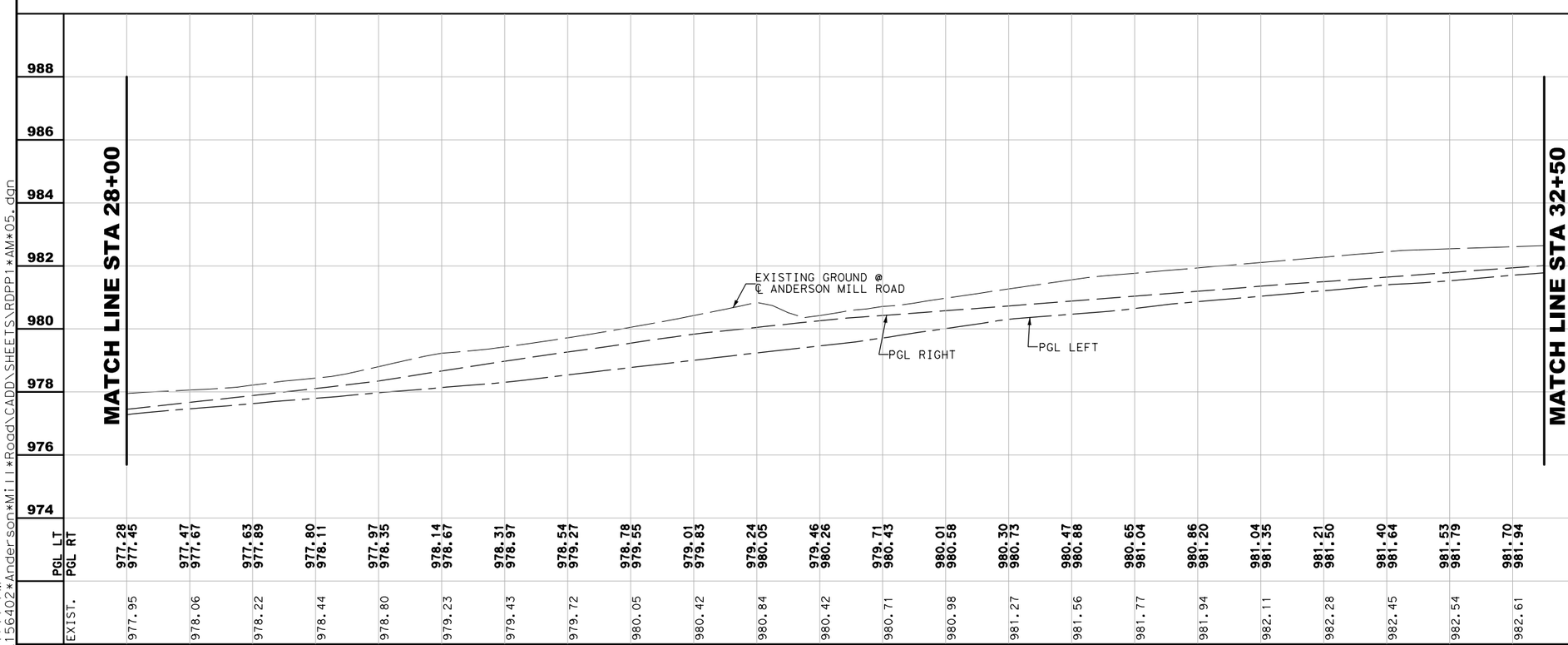

0′ 10′ 20′ 40′
SCALE: 1"=40′

LEGEND

- PROPOSED WIDENING
- PROPOSED 4" SIDEWALK

NOTES:

1. UNLESS OTHERWISE NOTED, DIMENSIONS AND PAVING POINTS ARE GIVEN TO NOMINAL FACE OF CURB.
2. SEE SIDEWALK AND PEDESTRIAN RAMP PLANS FOR SIDEWALK DETAILS.

NUMBER	DATE	REVISION	APPROVED

STATE OF TEXAS
GREGORY C. CALKINS
111309
LICENSED
PROFESSIONAL ENGINEER
9/28/2020

Binkley & Barfield, Inc
consulting engineers
Texas Registration Number F-257

CEDAR PARK

ANDERSON MILL ROAD
PLAN AND PROFILE
STA 28+00 - STA 32+50

DESIGN BY:	GCC	SCALE:	HORIZ: 1"=40′ VERT: 1"= 4′
DRAWN BY:	DSH		
CHECKED BY:	BMB	SHEET:	5 OF 14
APPROVED BY:	BDR		
PROJECT NO:	156402	PAGE:	39
DATE:	9/28/2020		

9/28/2020
1:17:17 PM
T:\156402*Anderson*Mill*Road\CADD\SHEETS\RDPP1*AM*05.dgn

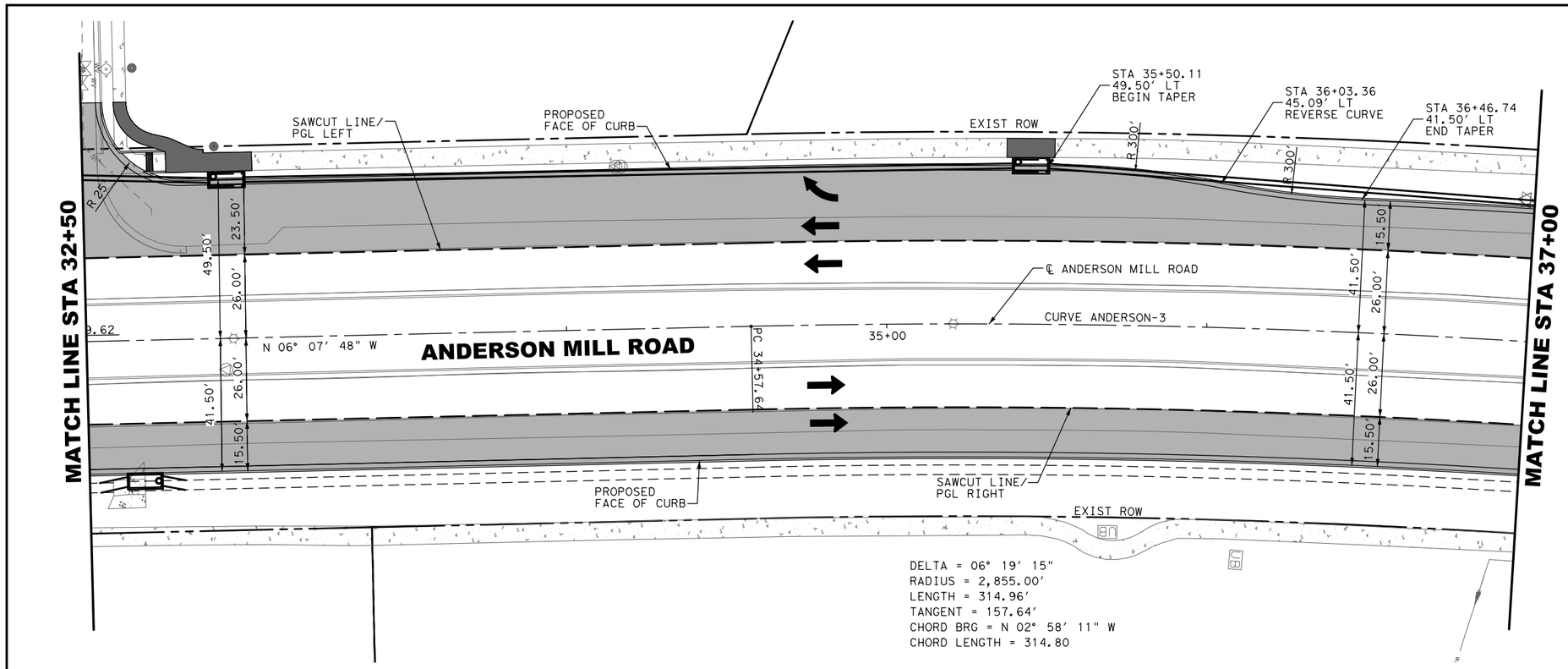

0' 10' 20' 40'
SCALE: 1"=40'

LEGEND

PROPOSED WIDENING

PROPOSED 4" SIDEWALK

NOTES:

1. UNLESS OTHERWISE NOTED, DIMENSIONS AND PAVING POINTS ARE GIVEN TO NOMINAL FACE OF CURB.
2. SEE SIDEWALK AND PEDESTRIAN RAMP PLANS FOR SIDEWALK DETAILS.

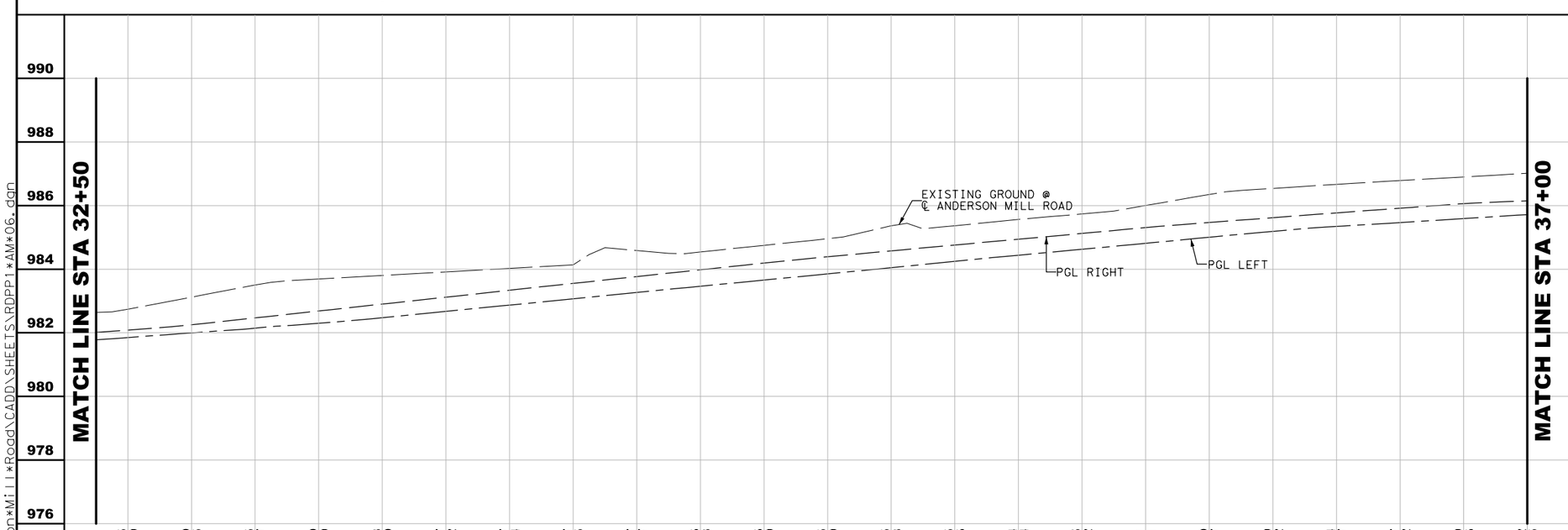

	PGL LT / PGL RT	EXIST.
33+00	981.85 / 982.09	982.74
	982.00 / 982.25	983.12
	982.15 / 982.47	983.50
	982.30 / 982.69	983.69
	982.48 / 982.90	983.80
	982.67 / 983.12	983.91
	982.87 / 983.34	984.02
34+00	983.07 / 983.55	984.13
	983.27 / 983.77	984.59
	983.46 / 983.98	984.54
	983.66 / 984.19	984.75
	983.85 / 984.39	984.96
35+00	984.05 / 984.58	985.36
	984.25 / 984.76	985.37
	984.44 / 984.94	985.56
	984.63 / 985.12	985.74
	984.81 / 985.31	986.00
36+00	985.00 / 985.47	986.35
	985.19 / 985.62	986.54
	985.34 / 985.77	986.67
	985.47 / 985.92	986.79
	985.59 / 986.06	986.90
37+00	985.72 / 986.15	987.02

NUMBER	DATE	REVISION	APPROVED

STATE OF TEXAS
GREGORY C. CALKINS
111309
LICENSED
PROFESSIONAL ENGINEER
9/28/2020

Binkley & Barfield, Inc
consulting engineers
Texas Registration Number F-257

CEDAR PARK

ANDERSON MILL ROAD
PLAN AND PROFILE
STA 32+50 - STA 37+00

DESIGN BY: GCC
DRAWN BY: DSH
CHECKED BY: BMB
APPROVED BY: BDR
PROJECT NO: 156402
DATE: 9/28/2020

SCALE:
HORIZ: 1"=40'
VERT: 1"= 4'

SHEET: 6 OF 14

PAGE: 40

9/28/2020
1:17:22 PM
I:\156402*Anderson*Mill*Road\CADD\SHEETS\RDPP1*AM*06.dgn

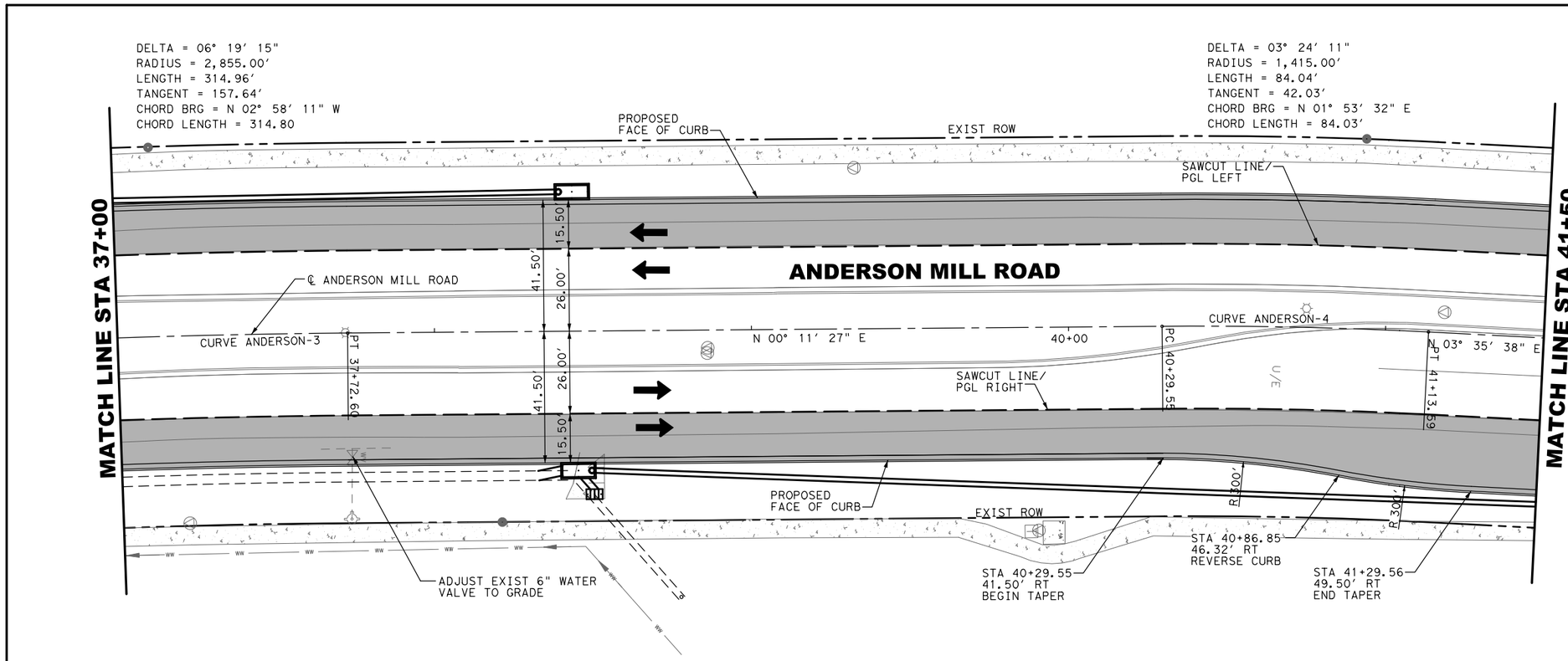

0′ 10′ 20′ 40′
SCALE: 1"=40′

LEGEND

- PROPOSED WIDENING
- PROPOSED 4" SIDEWALK

NOTES:

1. UNLESS OTHERWISE NOTED, DIMENSIONS AND PAVING POINTS ARE GIVEN TO NOMINAL FACE OF CURB.
2. SEE SIDEWALK AND PEDESTRIAN RAMP PLANS FOR SIDEWALK DETAILS.

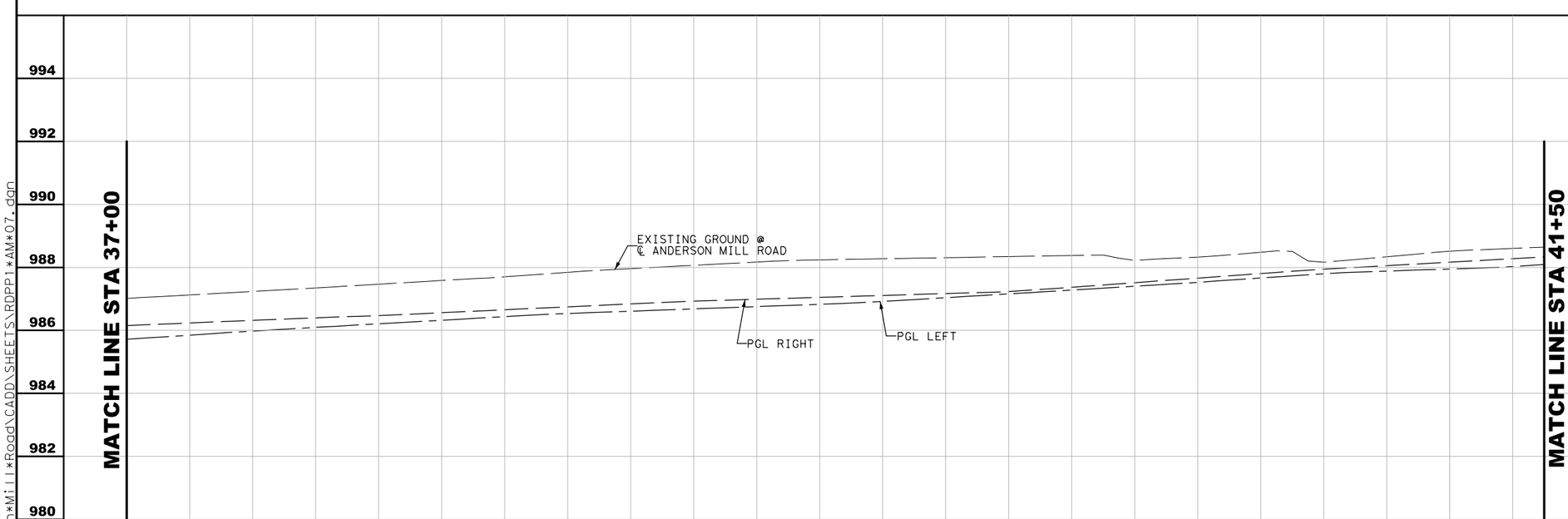

PGL LT	PGL RT	EXIST.
985.72	986.15	987.02
985.85	986.24	987.12
985.98	986.32	987.23
986.10	986.40	987.35
986.21	986.47	987.47
986.32	986.56	987.59
986.44	986.65	987.70
986.54	986.75	987.84
986.61	986.84	987.96
986.68	986.93	988.07
986.76	986.99	988.17
986.83	987.05	988.24
986.92	987.11	988.27
987.04	987.17	988.31
987.16	987.23	988.34
987.28	987.37	988.38
987.40	987.51	988.22
987.53	987.66	988.33
987.66	987.81	988.48
987.80	987.94	988.17
987.88	988.06	988.34
987.95	988.17	988.51
988.03	988.28	988.60

37+00 38+00 39+00 40+00 41+00

NUMBER	DATE	REVISION	APPROVED

STATE OF TEXAS
GREGORY C. CALKINS
111309
LICENSED
PROFESSIONAL ENGINEER
9/28/2020

Binkley & Barfield, Inc
consulting engineers
Texas Registration Number F-257

CEDAR PARK

ANDERSON MILL ROAD
PLAN AND PROFILE
STA 37+00 - STA 41+50

DESIGN BY:	GCC
DRAWN BY:	DSH
CHECKED BY:	BMB
APPROVED BY:	BDR
PROJECT NO:	156402
DATE:	9/28/2020

SCALE:
HORIZ: 1"=40′
VERT: 1"= 4′

SHEET: 7 OF 14

PAGE: 41

9/28/2020
1:17:25 PM
T:\156402*Anderson*Mill*Road\CADD\SHEETS\RDPP1*AM*07.dgn

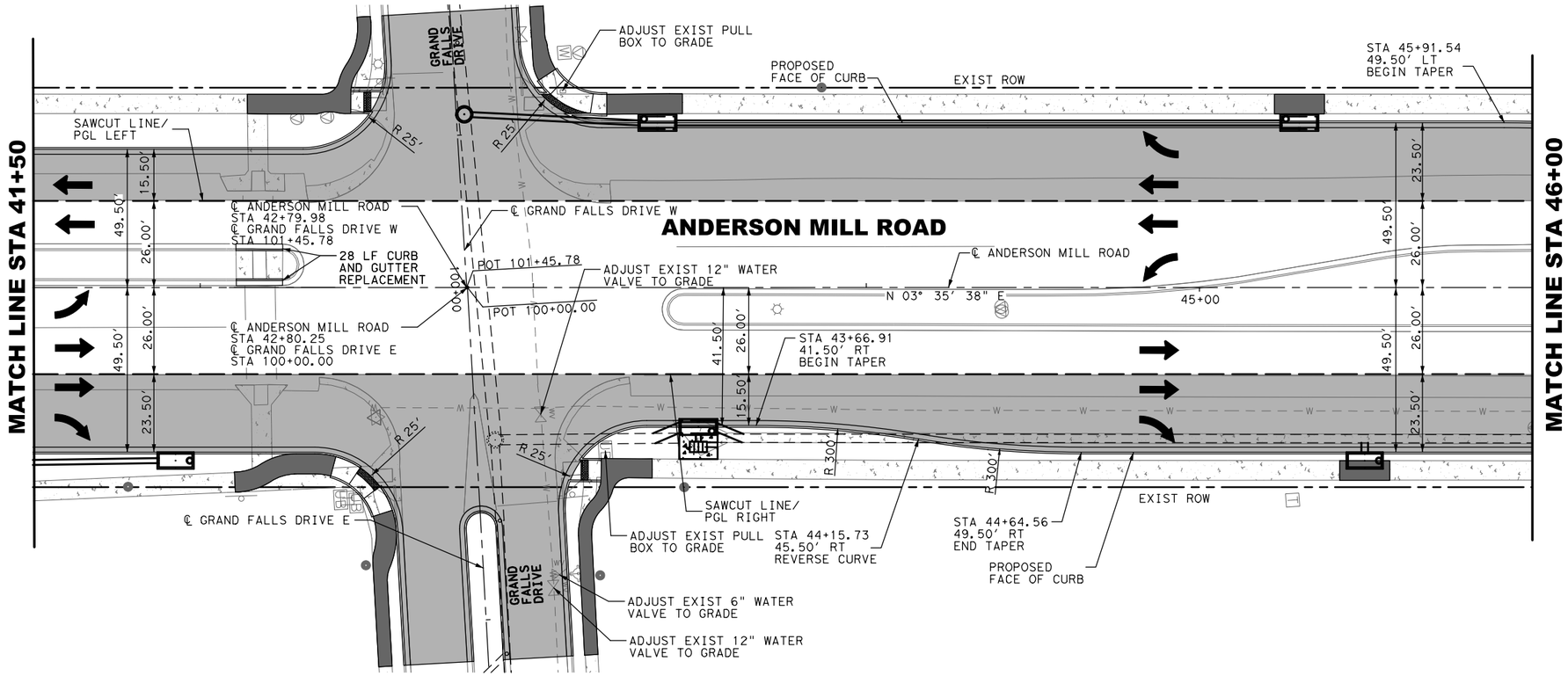

0' 10' 20' 40'
SCALE: 1"=40'

LEGEND

- PROPOSED WIDENING
- PROPOSED 4" SIDEWALK

NOTES:

1. UNLESS OTHERWISE NOTED, DIMENSIONS AND PAVING POINTS ARE GIVEN TO NOMINAL FACE OF CURB.
2. SEE SIDEWALK AND PEDESTRIAN RAMP PLANS FOR SIDEWALK DETAILS.

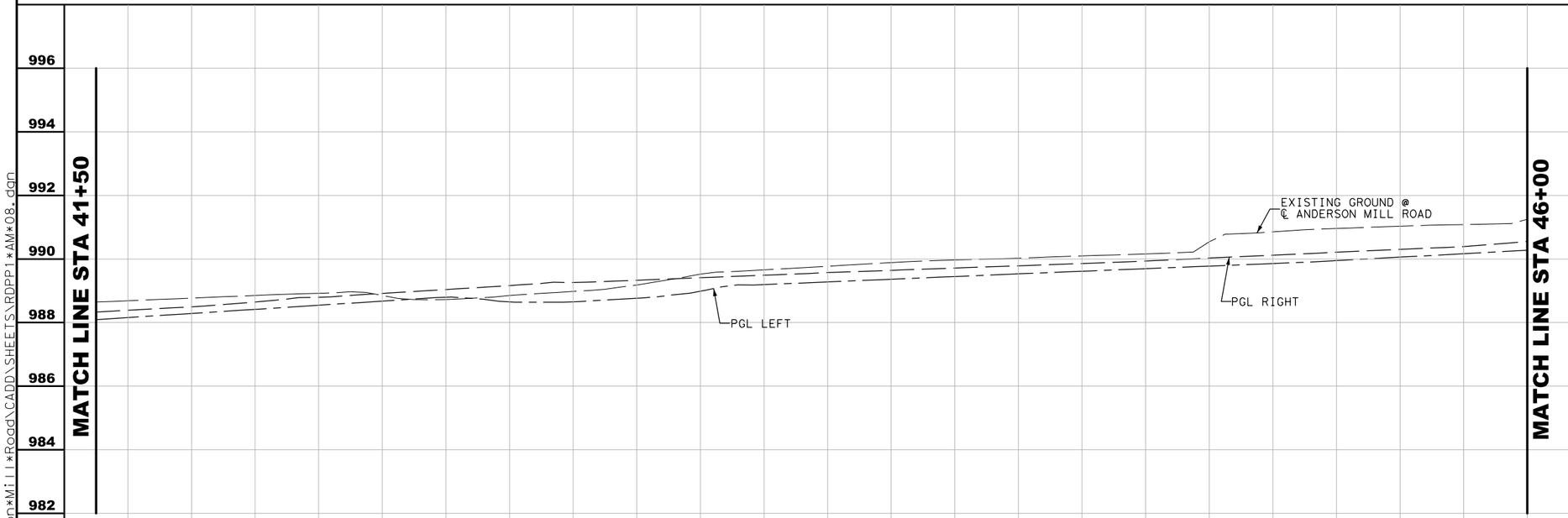

PGL LT	PGL RT	EXIST.
988.16	988.39	988.69
988.29	988.49	988.77
988.42	988.65	988.85
988.55	988.80	988.92
988.68	988.92	988.85
988.80	989.04	988.72
988.65	989.16	988.85
988.65	989.26	988.98
988.77	989.33	989.18
988.99	989.41	989.53
989.20	989.49	989.66
989.28	989.57	989.77
989.36	989.64	989.89
989.45	989.71	989.97
989.53	989.79	990.03
989.61	989.86	990.10
989.70	989.94	990.16
989.78	990.03	990.54
989.86	990.12	990.85
989.95	990.21	990.96
990.06	990.30	991.03
990.17	990.39	991.08
990.27	990.55	991.25

NUMBER	DATE	REVISION	APPROVED

STATE OF TEXAS
GREGORY C. CALKINS
111309
LICENSED
PROFESSIONAL ENGINEER
9/28/2020

Binkley & Barfield, Inc
consulting engineers
Texas Registration Number F-257

CEDAR PARK

ANDERSON MILL ROAD
PLAN AND PROFILE
STA 41+50 - STA 46+00

DESIGN BY: GCC
DRAWN BY: DSH
CHECKED BY: BMB
APPROVED BY: BDR
PROJECT NO: 156402
DATE: 9/28/2020

SCALE:
HORIZ: 1"=40'
VERT: 1"= 4'

SHEET: 8 OF 14

PAGE: 42

9/28/2020
1:17:30 PM
T:\156402*Anderson*Mill*Road\CADD\SHEETS\RDPP1*AM*08.dgn

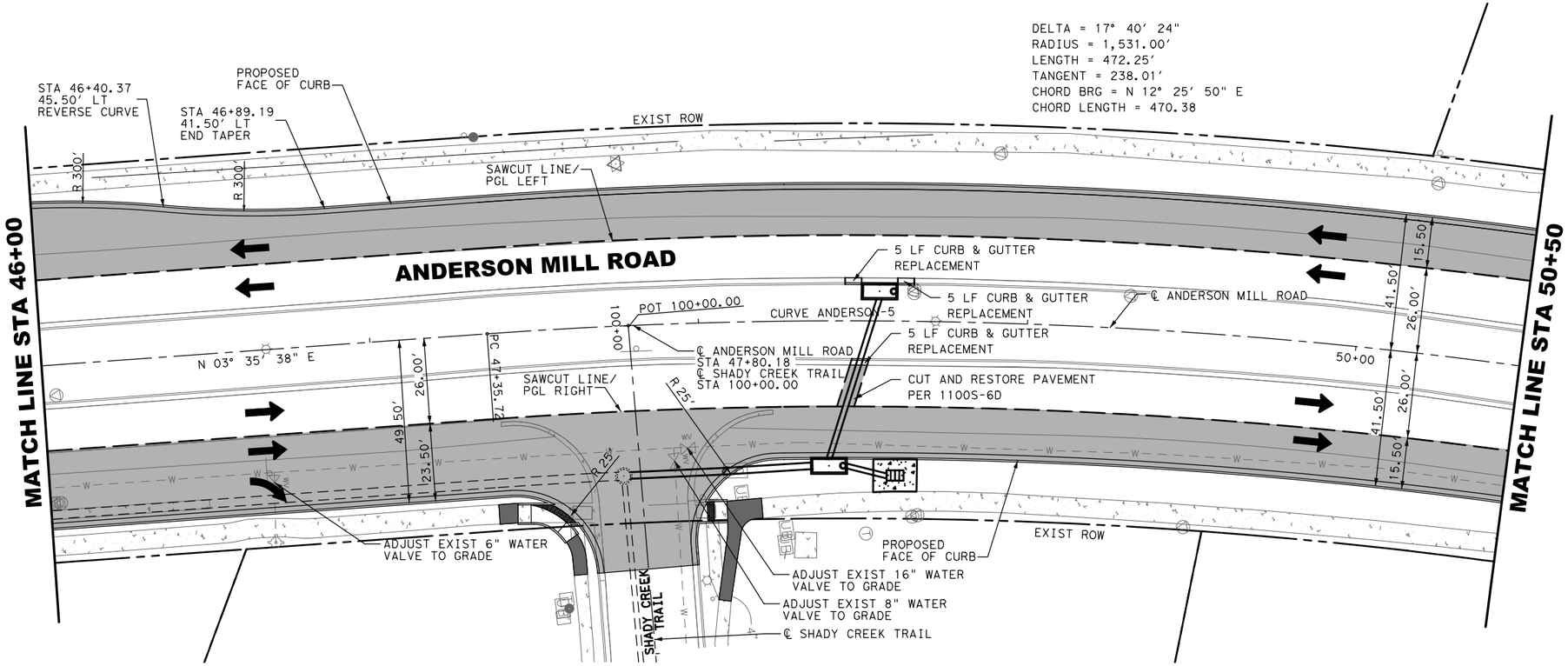

0′ 10′ 20′ 40′
SCALE: 1"=40′

LEGEND

- PROPOSED WIDENING
- PROPOSED 4" SIDEWALK

NOTES:

1. UNLESS OTHERWISE NOTED, DIMENSIONS AND PAVING POINTS ARE GIVEN TO NOMINAL FACE OF CURB.
2. SEE SIDEWALK AND PEDESTRIAN RAMP PLANS FOR SIDEWALK DETAILS.

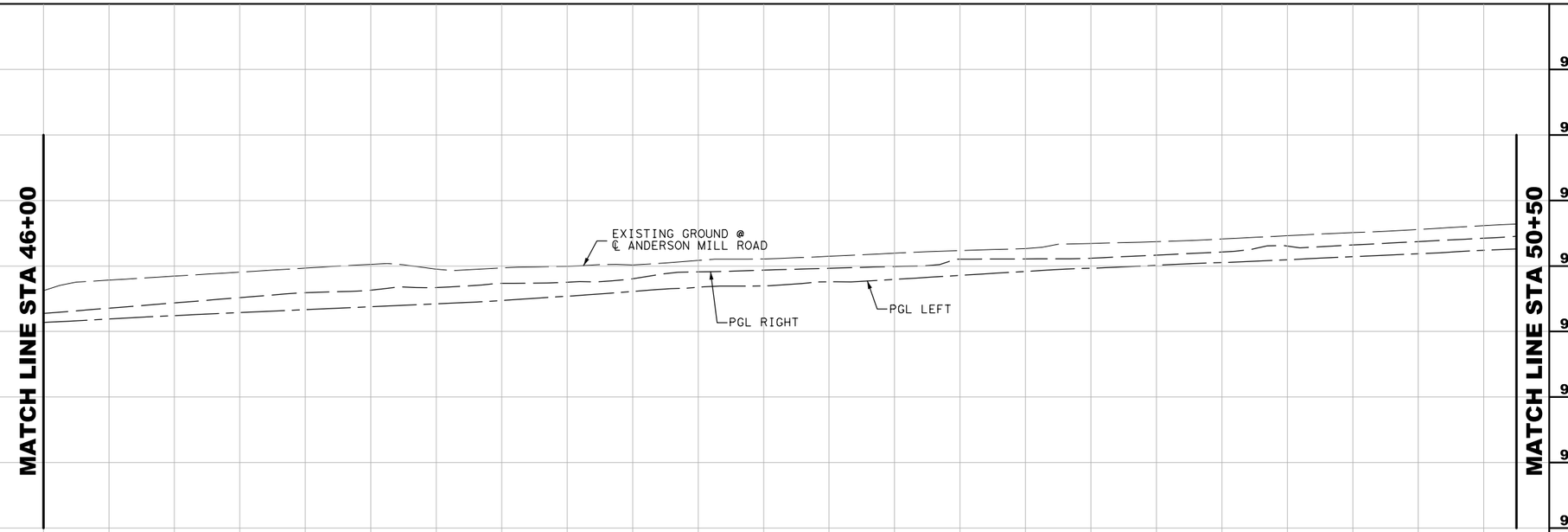

	46+00	47+00	48+00	49+00	50+00
PGL LT	990.27	990.38	990.48	990.58	990.67
PGL RT	990.55	990.71	990.87	991.03	991.19
EXIST.	991.25	991.57	991.69	991.81	991.93

	46+00	47+00	48+00	49+00	50+00
PGL LT	990.75	990.84	990.95	991.08	991.22
PGL RT	991.26	991.34	991.47	991.51	991.61
EXIST.	992.05	991.90	991.94	991.99	992.03

	46+00	47+00	48+00	49+00	50+00
PGL LT	991.35	991.39	991.52	991.59	991.71
PGL RT	991.82	991.87	991.93	991.98	992.21
EXIST.	992.17	992.22	992.30	992.39	992.47

	46+00	47+00	48+00	49+00	50+00
PGL LT	991.83	991.93	992.02	992.11	992.19
PGL RT	992.22	992.24	992.33	992.43	992.61
EXIST.	992.53	992.69	992.74	992.82	992.92

	46+00	47+00	48+00	49+00	50+00
PGL LT	992.28	992.37	992.48		
PGL RT	992.64	992.74	992.85		
EXIST.	993.02	993.12	993.23		

NUMBER	DATE	REVISION	APPROVED

STATE OF TEXAS
GREGORY C. CALKINS
111309
LICENSED
PROFESSIONAL ENGINEER
9/28/2020

Binkley & Barfield, Inc
consulting engineers
Texas Registration Number F-257

CEDAR PARK

ANDERSON MILL ROAD
PLAN AND PROFILE
STA 46+00 - STA 50+50

DESIGN BY: GCC
DRAWN BY: DSH
CHECKED BY: BMB
APPROVED BY: BDR
PROJECT NO: 156402
DATE: 9/28/2020

SCALE:
HORIZ: 1"=40′
VERT: 1"= 4′

SHEET: 9 OF 14
PAGE: 43

9/28/2020
1:17:35 PM
T:\156402*AndersonMill*Road\CADD\SHEETS\RDPP1*AM*09.dgn

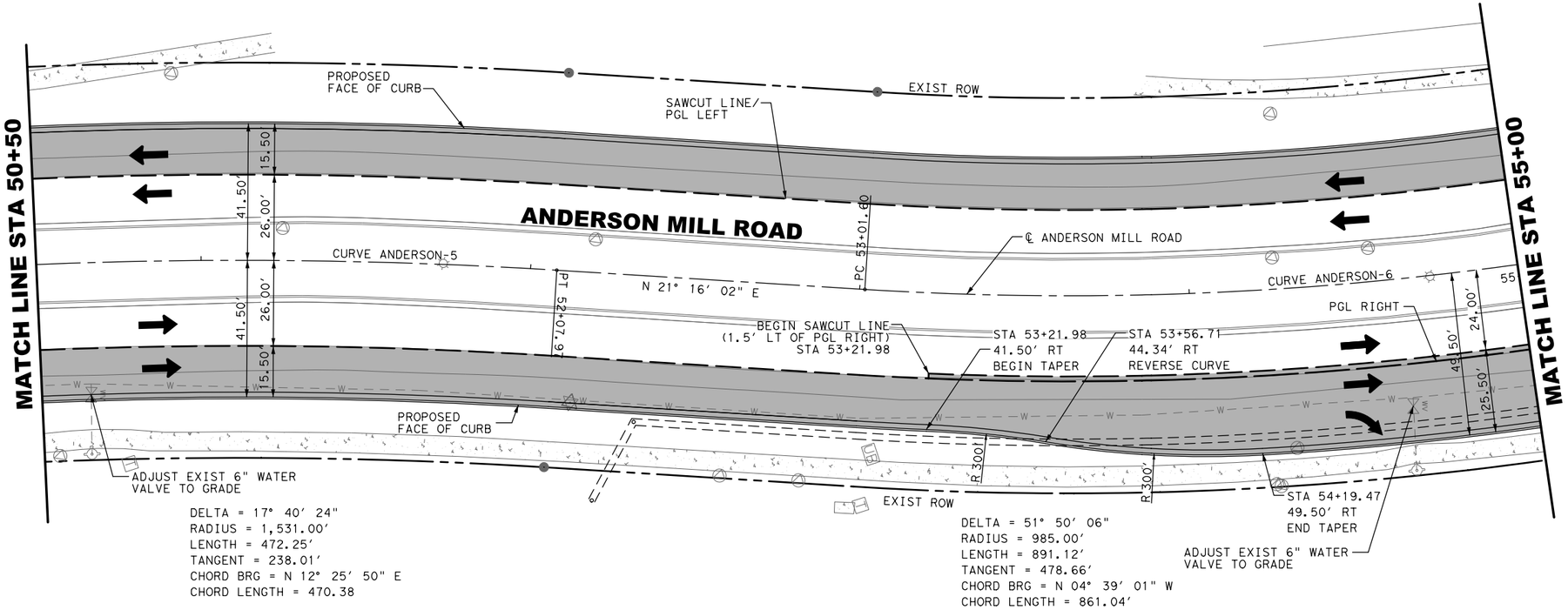

0′ 10′ 20′ 40′
SCALE: 1"=40′

LEGEND

- PROPOSED WIDENING
- PROPOSED 4" SIDEWALK

NOTES:

1. UNLESS OTHERWISE NOTED, DIMENSIONS AND PAVING POINTS ARE GIVEN TO NOMINAL FACE OF CURB.
2. SEE SIDEWALK AND PEDESTRIAN RAMP PLANS FOR SIDEWALK DETAILS.

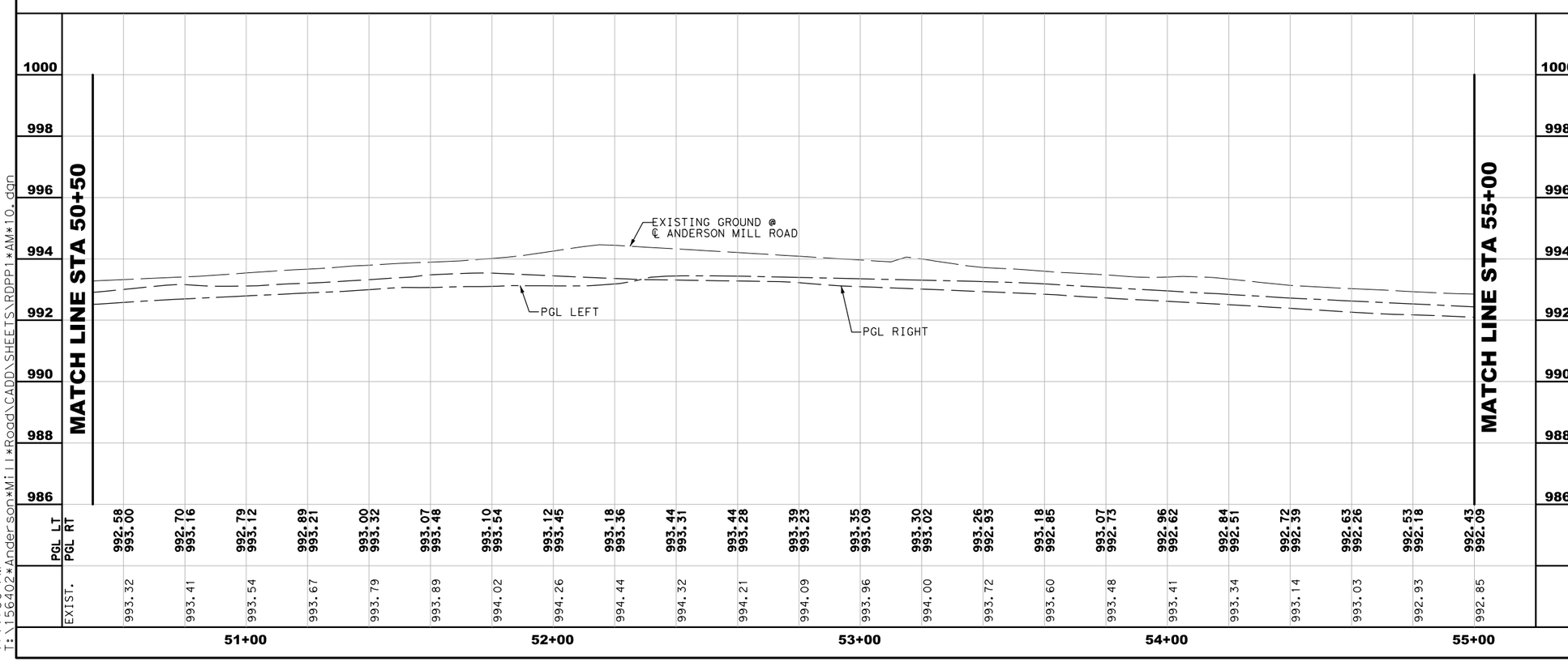

NUMBER	DATE	REVISION	APPROVED

STATE OF TEXAS
GREGORY C. CALKINS
111309
LICENSED
PROFESSIONAL ENGINEER
9/28/2020

Binkley & Barfield, Inc
consulting engineers
Texas Registration Number F-257

CEDAR PARK

ANDERSON MILL ROAD
PLAN AND PROFILE
STA 50+50 - STA 55+00

DESIGN BY: GCC
DRAWN BY: DSH
CHECKED BY: BMB
APPROVED BY: BDR
PROJECT NO: 156402
DATE: 9/28/2020

SCALE: HORIZ: 1"=40′ VERT: 1"= 4′

SHEET: 10 OF 14

PAGE: 44

9/28/2020
1:17:36 PM
T:\156402*Anderson*Mill*Road\CADD\SHEETS\RDPP1*AM*10.dgn

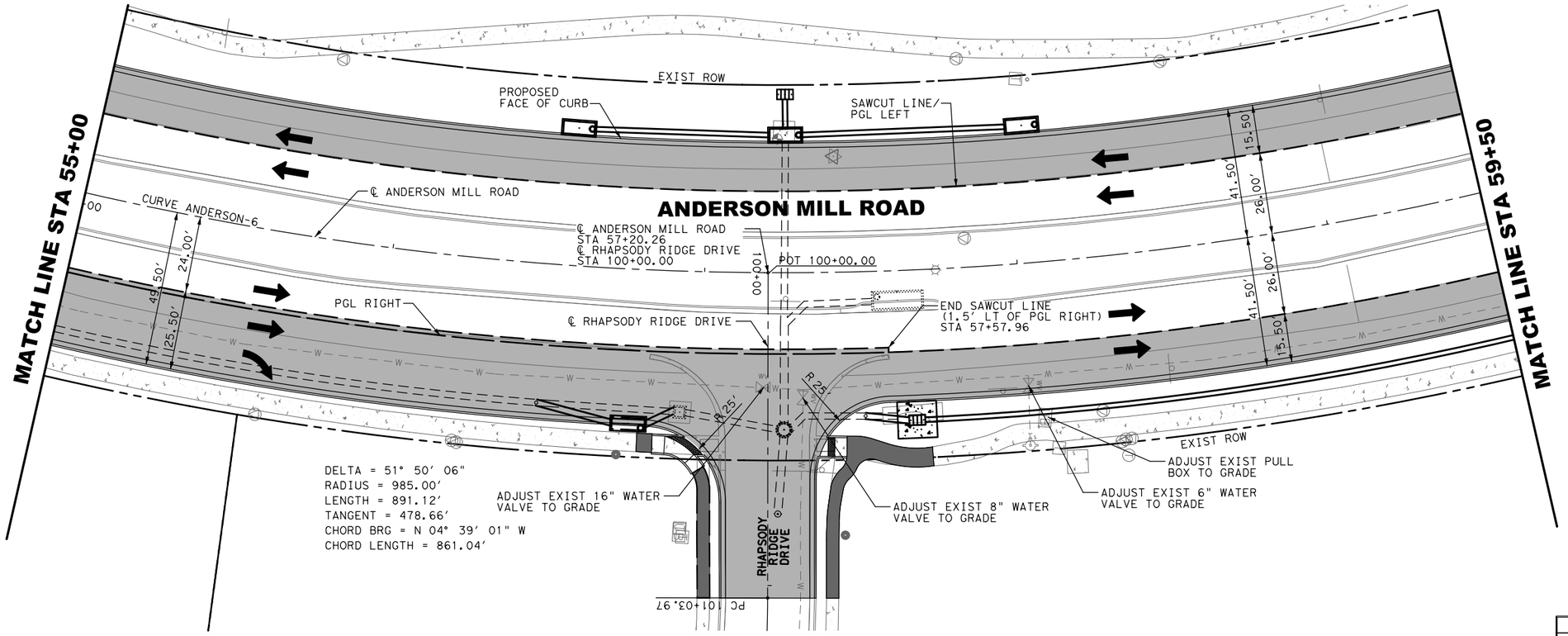

0' 10' 20' 40'
SCALE: 1"=40'

LEGEND

- PROPOSED WIDENING
- PROPOSED 4" SIDEWALK

NOTES:

1. UNLESS OTHERWISE NOTED, DIMENSIONS AND PAVING POINTS ARE GIVEN TO NOMINAL FACE OF CURB.
2. SEE SIDEWALK AND PEDESTRIAN RAMP PLANS FOR SIDEWALK DETAILS.

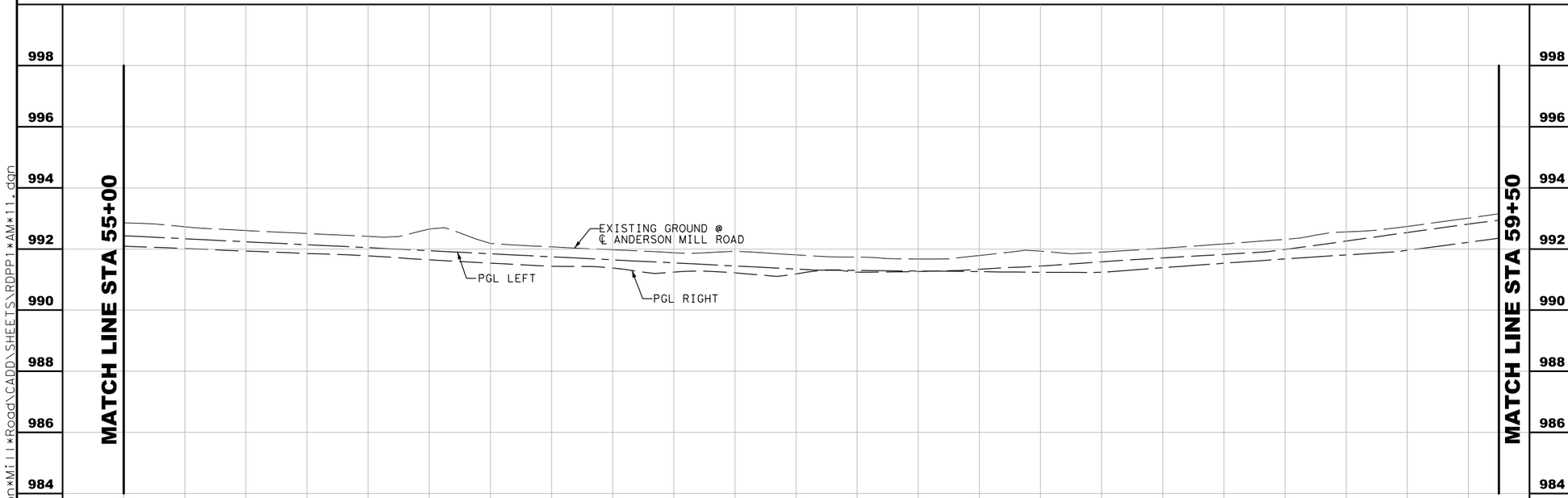

	55+00	56+00	57+00	58+00	59+00
PGL LT	992.43	992.34	992.24	992.14	992.04
PGL RT	992.09	992.02	991.93	991.85	991.77
EXIST.	992.85	992.72	992.60	992.51	992.41

	55+00	56+00	57+00	58+00	59+00
PGL LT	991.94	991.84	991.74	991.64	991.55
PGL RT	991.65	991.54	991.44	991.38	991.24
EXIST.	992.65	992.18	992.07	991.97	991.88

	55+00	56+00	57+00	58+00	59+00
PGL LT	991.45	991.34	991.30	991.28	991.26
PGL RT	991.22	991.18	991.24	991.26	991.34
EXIST.	991.92	991.81	991.74	991.67	991.78

	55+00	56+00	57+00	58+00	59+00
PGL LT	991.24	991.24	991.39	991.53	991.67
PGL RT	991.44	991.58	991.71	991.82	991.99
EXIST.	991.93	991.90	992.03	992.17	992.32

	55+00	56+00	57+00	58+00	59+00
PGL LT	991.81	991.96	992.22		
PGL RT	992.26	992.54	992.81		
EXIST.	992.56	992.74	993.01		

NUMBER	DATE	REVISION	APPROVED

STATE OF TEXAS
GREGORY C. CALKINS
111309
LICENSED
PROFESSIONAL ENGINEER
9/28/2020

Binkley & Barfield, Inc
consulting engineers
Texas Registration Number F-257

CEDAR PARK

ANDERSON MILL ROAD
PLAN AND PROFILE
STA 55+00 - STA 59+50

DESIGN BY: GCC
DRAWN BY: DSH
CHECKED BY: BMB
APPROVED BY: BDR
PROJECT NO: 156402
DATE: 9/28/2020

SCALE:
HORIZ: 1"=40'
VERT: 1"= 4'

SHEET: 11 OF 14

PAGE: 45

9/28/2020
1:17:41 PM
T:\156402*Anderson*Mill*Road\CADD\SHEETS\RDPP1*AM*11.dgn

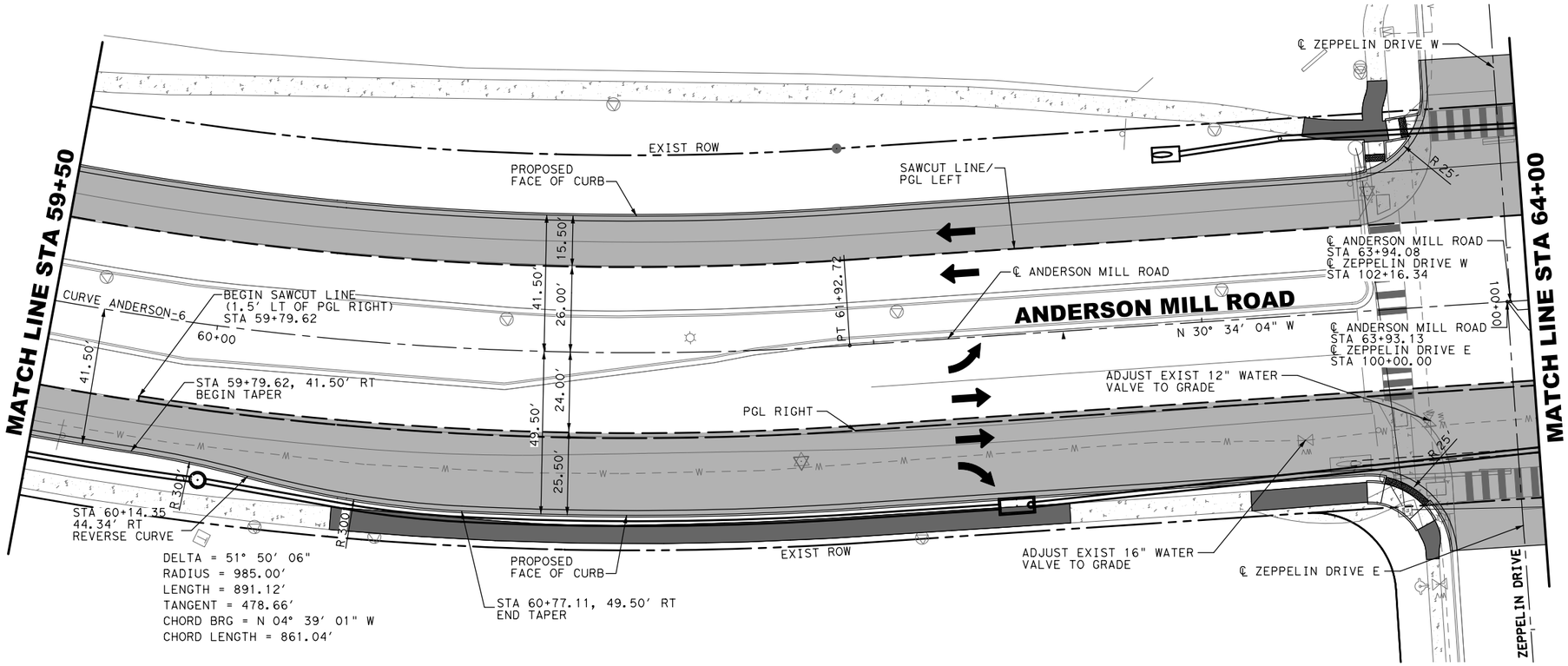

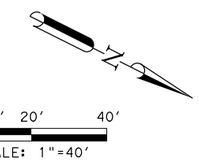

LEGEND

- PROPOSED WIDENING
- PROPOSED 4" SIDEWALK

NOTES:

1. UNLESS OTHERWISE NOTED, DIMENSIONS AND PAVING POINTS ARE GIVEN TO NOMINAL FACE OF CURB.
2. SEE SIDEWALK AND PEDESTRIAN RAMP PLANS FOR SIDEWALK DETAILS.

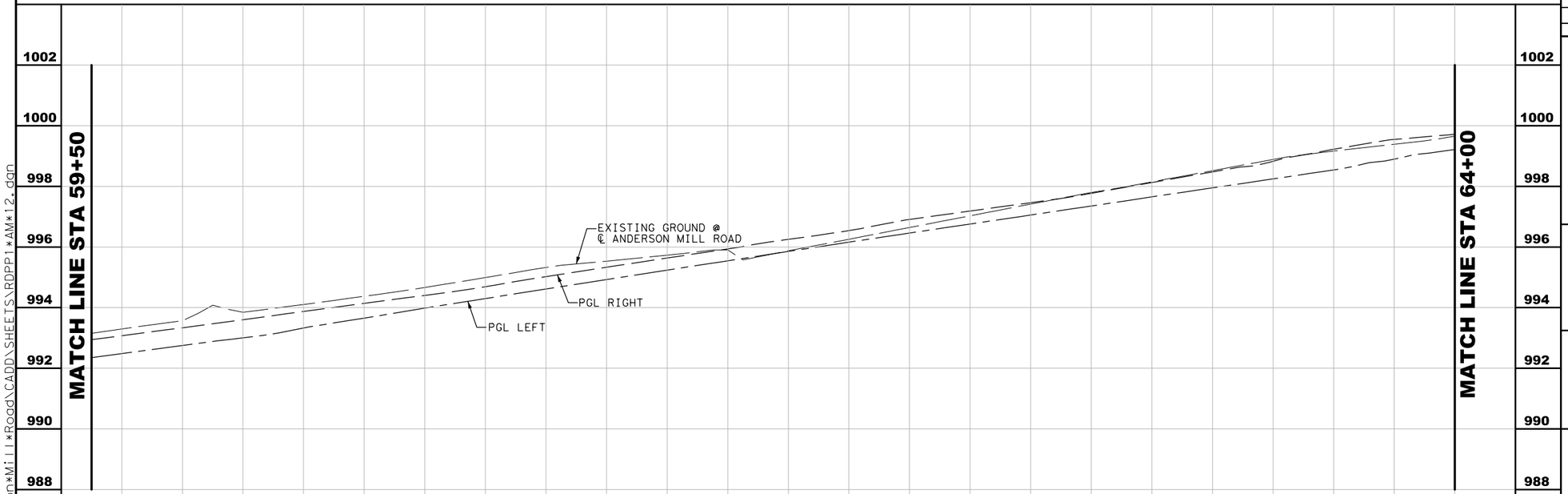

	PGL LT	PGL RT	EXIST.
60+00	992.49	993.07	993.29
	992.75	993.34	993.57
	993.00	993.60	993.85
	993.33	993.87	994.10
	993.66	994.14	994.37
	993.98	994.40	994.67
	994.30	994.69	994.99
61+00	994.62	995.02	995.33
	994.93	995.33	995.53
	995.24	995.64	995.73
	995.54	995.94	995.90
	995.85	996.25	995.87
	996.16	996.54	996.26
	996.46	996.91	996.64
62+00	996.76	997.19	997.03
	997.06	997.46	997.41
	997.35	997.77	997.80
63+00	997.65	998.12	998.15
	997.95	998.48	998.52
	998.25	998.83	998.89
	998.54	999.23	999.16
	998.90	999.55	999.39
64+00	999.22	999.72	999.65

NUMBER	DATE	REVISION	APPROVED

STATE OF TEXAS
GREGORY C. CALKINS
111309
LICENSED
PROFESSIONAL ENGINEER
9/28/2020

Binkley & Barfield, Inc
consulting engineers
Texas Registration Number F-257

CEDAR PARK

ANDERSON MILL ROAD
PLAN AND PROFILE
STA 59+50 - STA 64+00

DESIGN BY: GCC
DRAWN BY: DSH
CHECKED BY: BMB
APPROVED BY: BDR
PROJECT NO: 156402
DATE: 9/28/2020

SCALE:
HORIZ: 1"=40'
VERT: 1"= 4'

SHEET: 12 OF 14

PAGE: 46

9/28/2020
1:17:45 PM
T:\156402*Anderson*Mill*Road\CADD\SHEETS\RDPP1*AM*12.dgn

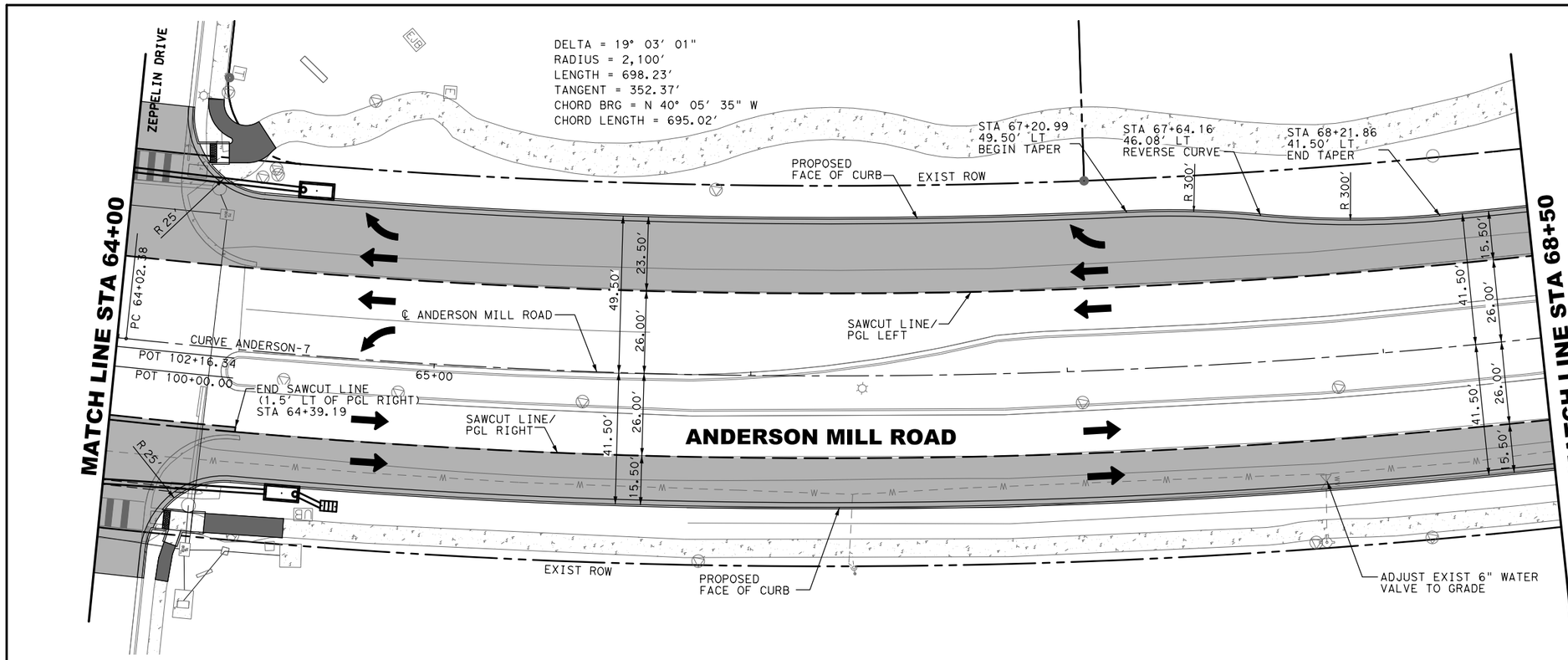

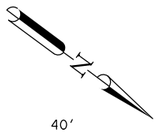

0′ 10′ 20′ 40′
SCALE: 1"=40′

LEGEND

- PROPOSED WIDENING
- PROPOSED 4" SIDEWALK

NOTES:

1. UNLESS OTHERWISE NOTED, DIMENSIONS AND PAVING POINTS ARE GIVEN TO NOMINAL FACE OF CURB.
2. SEE SIDEWALK AND PEDESTRIAN RAMP PLANS FOR SIDEWALK DETAILS.

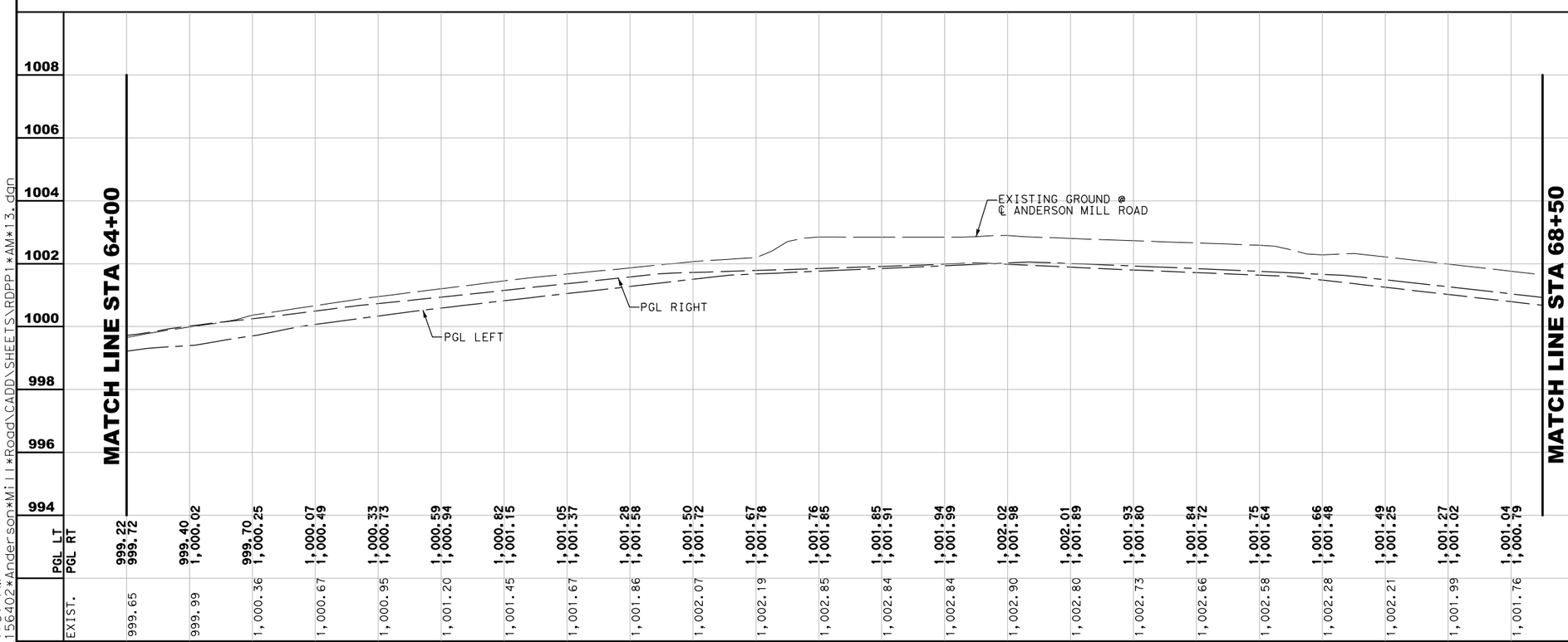

NUMBER	DATE	REVISION	APPROVED

STATE OF TEXAS
GREGORY C. CALKINS
111309
LICENSED
PROFESSIONAL ENGINEER
9/28/2020

Binkley & Barfield, Inc
consulting engineers
Texas Registration Number F-257

CEDAR PARK

ANDERSON MILL ROAD
PLAN AND PROFILE
STA 64+00 - STA 68+50

DESIGN BY:	GCC
DRAWN BY:	DSH
CHECKED BY:	BMB
APPROVED BY:	BDR
PROJECT NO:	156402
DATE:	9/28/2020

SCALE:
HORIZ: 1"=40′
VERT: 1"= 4′

SHEET: 13 OF 14

PAGE: 47

9/28/2020
1:17:51 PM
T:\156402*Anderson*Mill*Road\CADD\SHEETS\RDPP1*AM*13.dgn

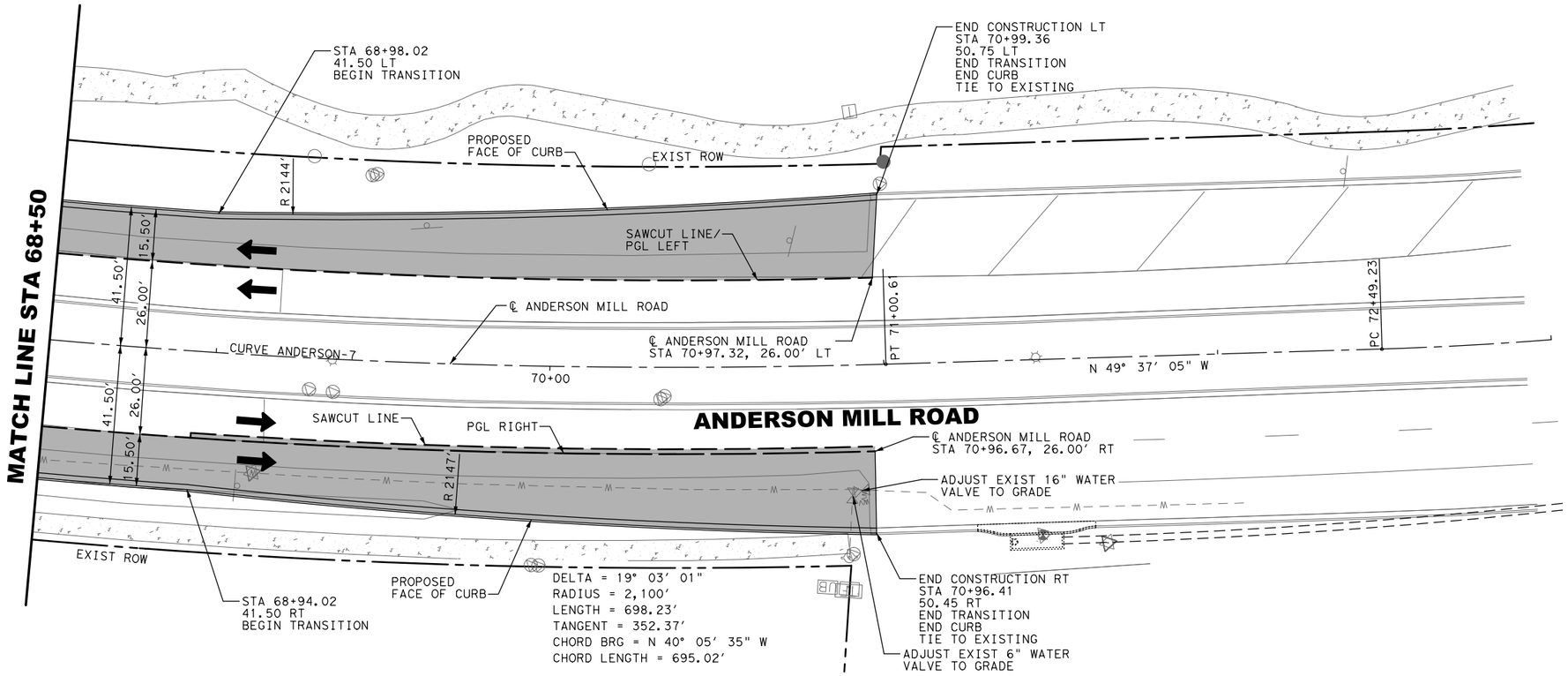

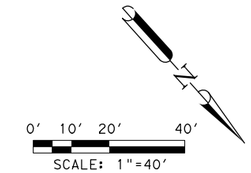

LEGEND

- PROPOSED WIDENING
- PROPOSED 4" SIDEWALK

NOTES:

1. UNLESS OTHERWISE NOTED, DIMENSIONS AND PAVING POINTS ARE GIVEN TO NOMINAL FACE OF CURB.
2. SEE SIDEWALK AND PEDESTRIAN RAMP PLANS FOR SIDEWALK DETAILS.

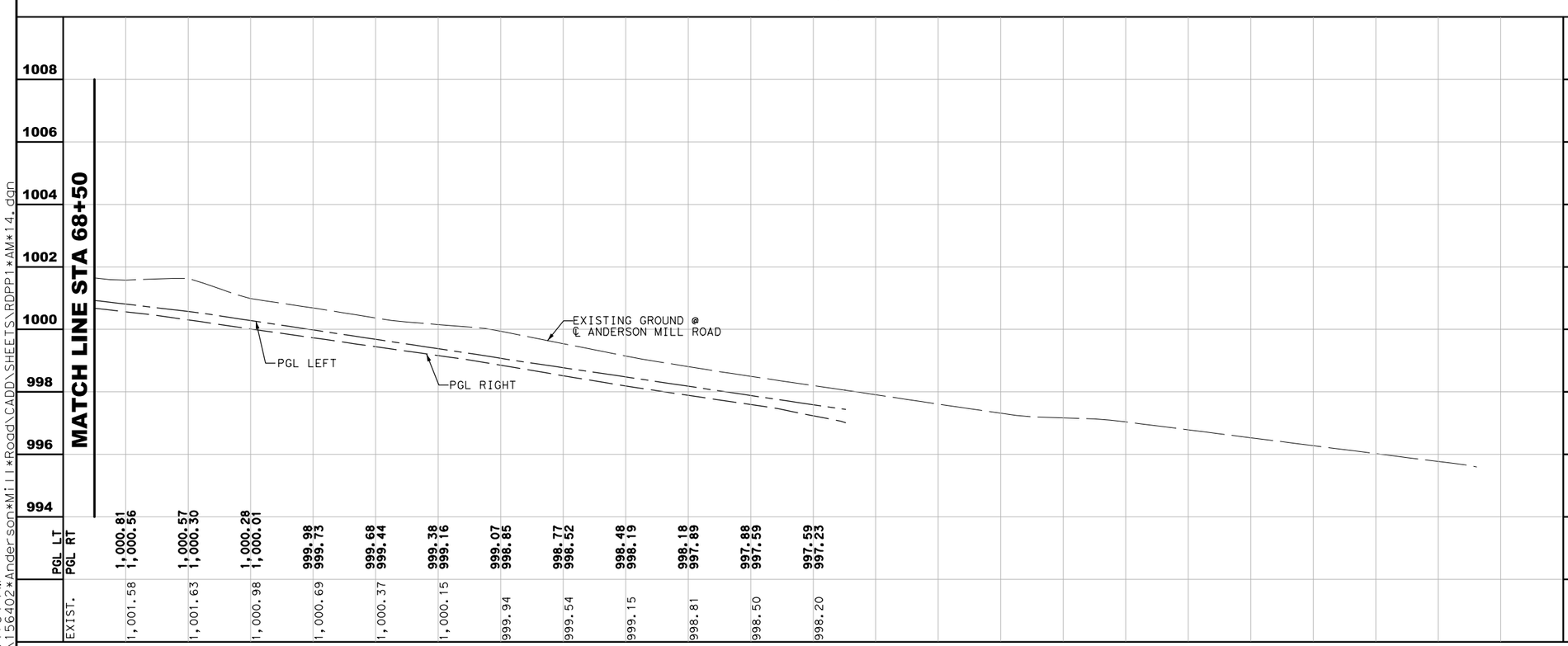

NUMBER	DATE	REVISION	APPROVED

STATE OF TEXAS
GREGORY C. CALKINS
111309
LICENSED
PROFESSIONAL ENGINEER
9/28/2020

Binkley & Barfield, Inc
consulting engineers
Texas Registration Number F-257

CEDAR PARK

ANDERSON MILL ROAD
PLAN AND PROFILE
STA 68+50 TO END OF PROJECT

DESIGN BY:	GCC
DRAWN BY:	DSH
CHECKED BY:	BMB
APPROVED BY:	BDR
PROJECT NO:	156402
DATE:	9/28/2020

SCALE:
HORIZ: 1"=40'
VERT: 1"= 4'

SHEET: 14 OF 14

PAGE: 48

9/28/2020
1:17:54 PM
I:\156402*Anderson*Mill*Road\CADD\SHEETS\RDPP1*AM*14.dgn

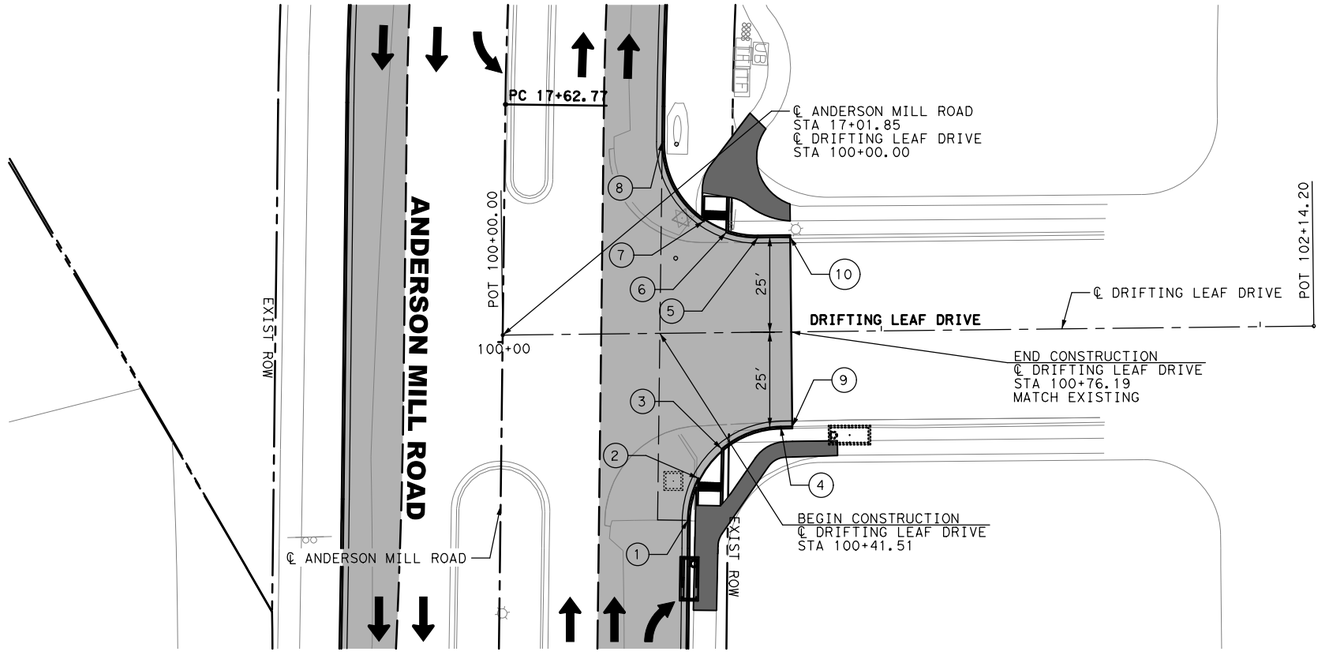

POINT	STATION	OFFSET	ELEVATION	DESCRIPTION
1	100+48.37	49.43' RT	980.75	PC 25' R
2	100+51.23	38.37' RT	980.77	6' SIDEWALK
3	100+57.49	30.69' RT	980.50	6' SIDEWALK
4	100+73.15	25.01' RT	979.13	PT 25' R
5	100+67.68	25.03' LT	978.43	PC 25' R
6	100+59.34	26.46' LT	978.23	6' SIDEWALK
7	100+53.43	29.48' LT	978.12	6' SIDEWALK
8	100+42.68	50.61' LT	977.37	PT 25' R
9	100+76.18	24.98' RT	978.89	MATCH EXISTING
10	100+76.19	25.03' LT	978.63	MATCH EXISTING

0' 10' 20' 40'

SCALE: 1"=40'

LEGEND

PROPOSED WIDENING

PROPOSED SIDEWALK

NOTES:

1. UNLESS OTHERWISE NOTED, DIMENSIONS AND PAVING POINTS ARE GIVEN TO NOMINAL FACE OF CURB.
2. SEE SIDEWALK AND PEDESTRIAN RAMP PLANS FOR ADDITIONAL INFORMATION.

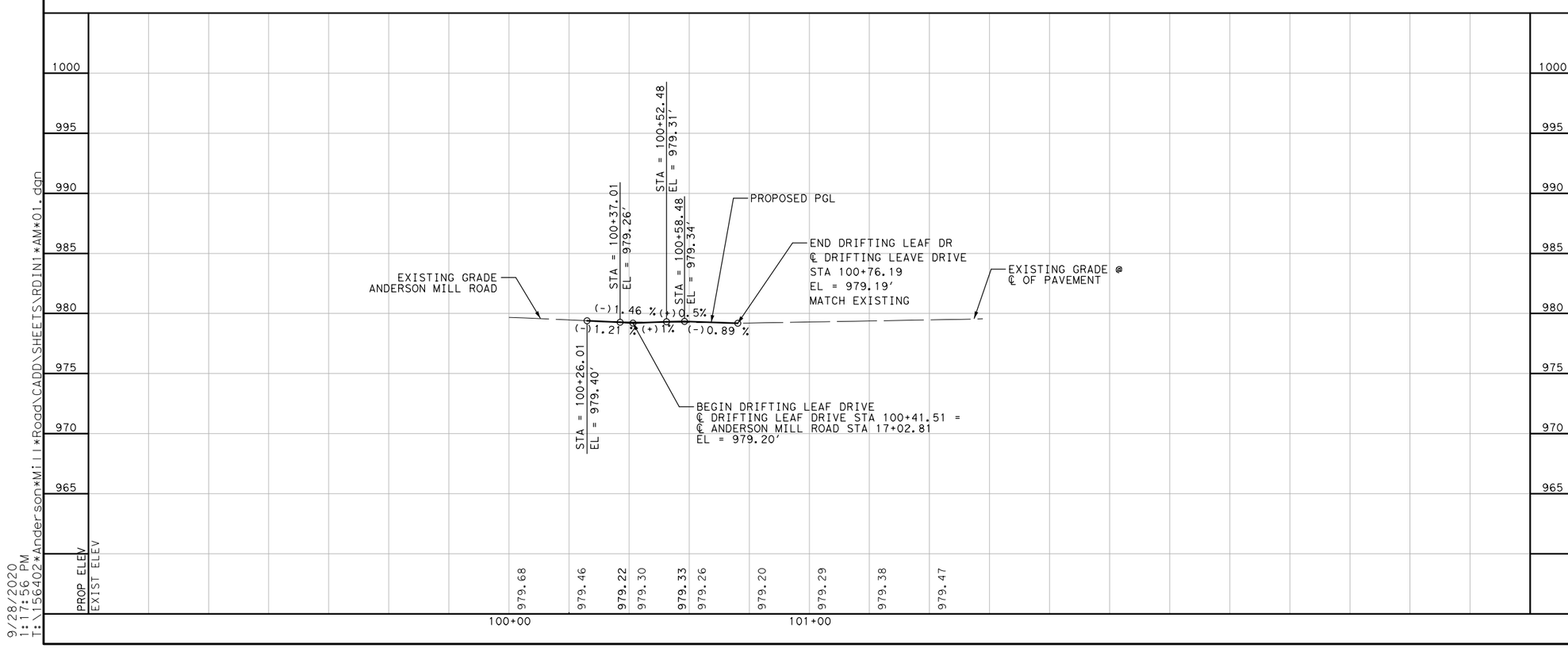

NUMBER	DATE	REVISION	APPROVED

STATE OF TEXAS
GREGORY C. CALKINS
111309
LICENSED
PROFESSIONAL ENGINEER

9/28/2020

Binkley & Barfield, Inc
consulting engineers
Texas Registration Number F-257

CEDAR PARK

ANDERSON MILL ROAD

INTERSECTION LAYOUTS
DRIFTING LEAF DRIVE

DESIGN BY:	GCC
DRAWN BY:	DSH
CHECKED BY:	BMB
APPROVED BY:	BDR
PROJECT NO:	156402
DATE:	9/28/2020

SCALE:
HORIZ: 1"=40'
VERT: 1"=10'

SHEET: 1 OF 9

PAGE: 49

9/28/2020
1:17:56 PM
I:\156402*Anderson*Mill*Road\CADD\SHEETS\RDIN1*AM*01.dgn

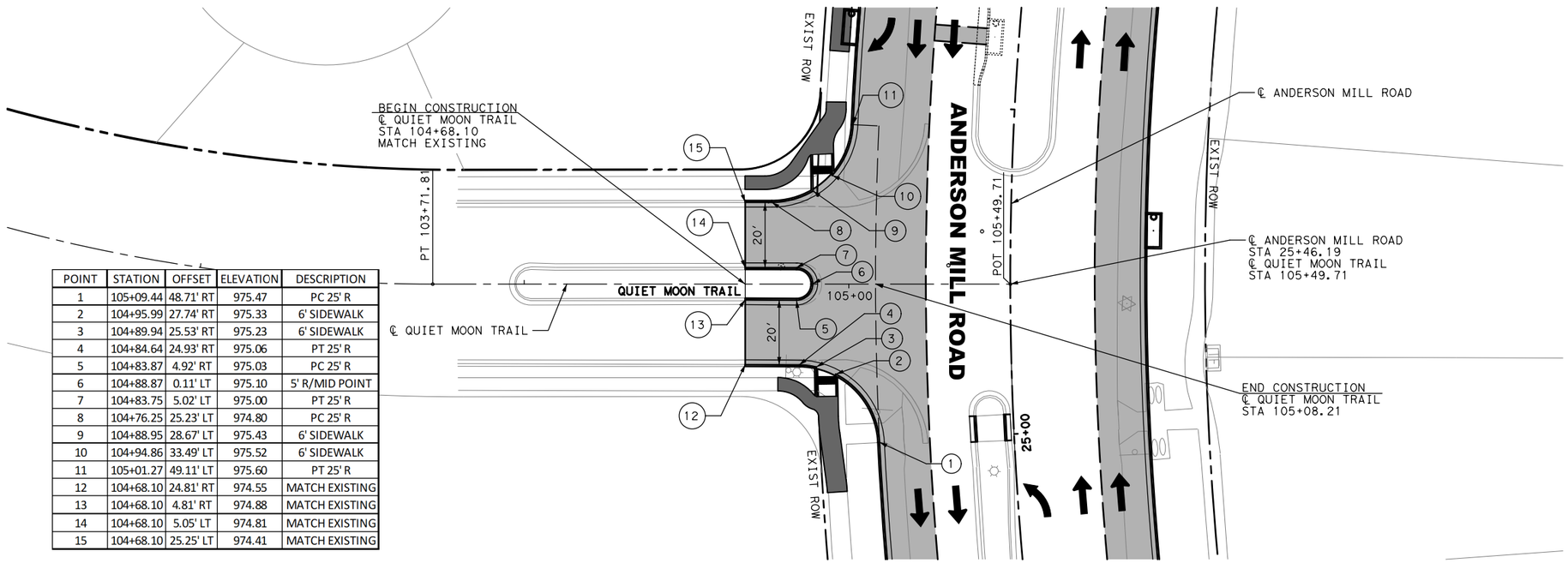

POINT	STATION	OFFSET	ELEVATION	DESCRIPTION
1	105+09.44	48.71' RT	975.47	PC 25' R
2	104+95.99	27.74' RT	975.33	6' SIDEWALK
3	104+89.94	25.53' RT	975.23	6' SIDEWALK
4	104+84.64	24.93' RT	975.06	PT 25' R
5	104+83.87	4.92' RT	975.03	PC 25' R
6	104+88.87	0.11' LT	975.10	5' R/MID POINT
7	104+83.75	5.02' LT	975.00	PT 25' R
8	104+76.25	25.23' LT	974.80	PC 25' R
9	104+88.95	28.67' LT	975.43	6' SIDEWALK
10	104+94.86	33.49' LT	975.52	6' SIDEWALK
11	105+01.27	49.11' LT	975.60	PT 25' R
12	104+68.10	24.81' RT	974.55	MATCH EXISTING
13	104+68.10	4.81' RT	974.88	MATCH EXISTING
14	104+68.10	5.05' LT	974.81	MATCH EXISTING
15	104+68.10	25.25' LT	974.41	MATCH EXISTING

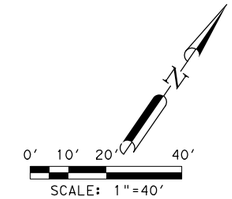

LEGEND

PROPOSED WIDENING

PROPOSED SIDEWALK

NOTES:

1. UNLESS OTHERWISE NOTED, DIMENSIONS AND PAVING POINTS ARE GIVEN TO NOMINAL FACE OF CURB.
2. SEE SIDEWALK AND PEDESTRIAN RAMP PLANS FOR ADDITIONAL INFORMATION.

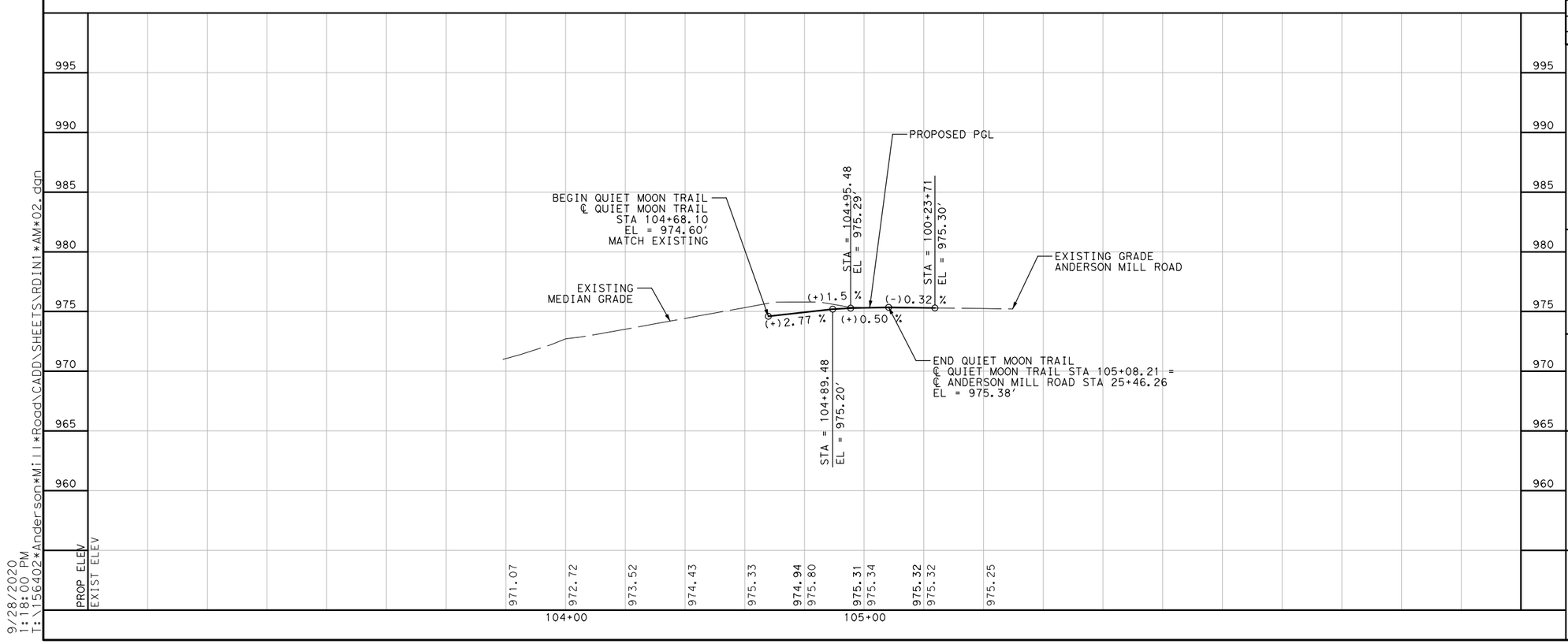

NUMBER	DATE	REVISION	APPROVED

STATE OF TEXAS
GREGORY C. CALKINS
111309
LICENSED
PROFESSIONAL ENGINEER
9/28/2020

Binkley & Barfield, Inc
consulting engineers
Texas Registration Number F-257

CEDAR PARK

ANDERSON MILL ROAD
INTERSECTION LAYOUTS
QUIET MOON TRAIL

DESIGN BY:	GCC
DRAWN BY:	DSH
CHECKED BY:	BMB
APPROVED BY:	BDR
PROJECT NO:	156402
DATE:	9/28/2020

SCALE:
HORIZ: 1"=40'
VERT: 1"=10'

SHEET: 2 OF 9

PAGE: 50

9/28/2020
1:18:00 PM
I:\156402*Anderson*Mill*Road\CADD\SHEETS\RDIN1*AM*02.dgn

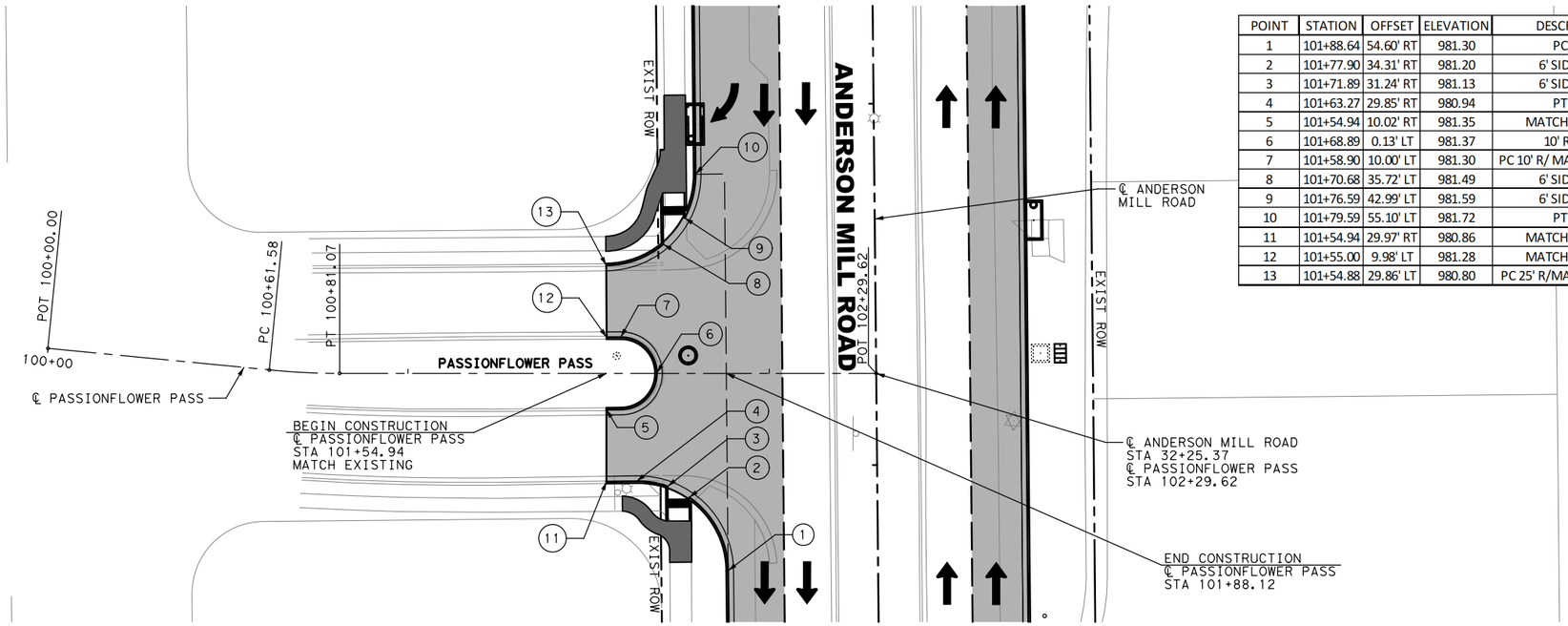

POINT	STATION	OFFSET	ELEVATION	DESCRIPTION
1	101+88.64	54.60' RT	981.30	PC 25' R
2	101+77.90	34.31' RT	981.20	6' SIDEWALK
3	101+71.89	31.24' RT	981.13	6' SIDEWALK
4	101+63.27	29.85' RT	980.94	PT 25' R
5	101+54.94	10.02' RT	981.35	MATCH EXISTING
6	101+68.89	0.13' LT	981.37	10' RADIUS
7	101+58.90	10.00' LT	981.30	PC 10' R/ MATCH EXISTING
8	101+70.68	35.72' LT	981.49	6' SIDEWALK
9	101+76.59	42.99' LT	981.59	6' SIDEWALK
10	101+79.59	55.10' LT	981.72	PT 25' R
11	101+54.94	29.97' RT	980.86	MATCH EXISTING
12	101+55.00	9.98' LT	981.28	MATCH EXISTING
13	101+54.88	29.86' LT	980.80	PC 25' R/MATCH EXISTING

0′ 10′ 20′ 40′
SCALE: 1"=40′

LEGEND

PROPOSED WIDENING

PROPOSED SIDEWALK

NOTES:

1. UNLESS OTHERWISE NOTED, DIMENSIONS AND PAVING POINTS ARE GIVEN TO NOMINAL FACE OF CURB.
2. SEE SIDEWALK AND PEDESTRIAN RAMP PLANS FOR ADDITIONAL INFORMATION.

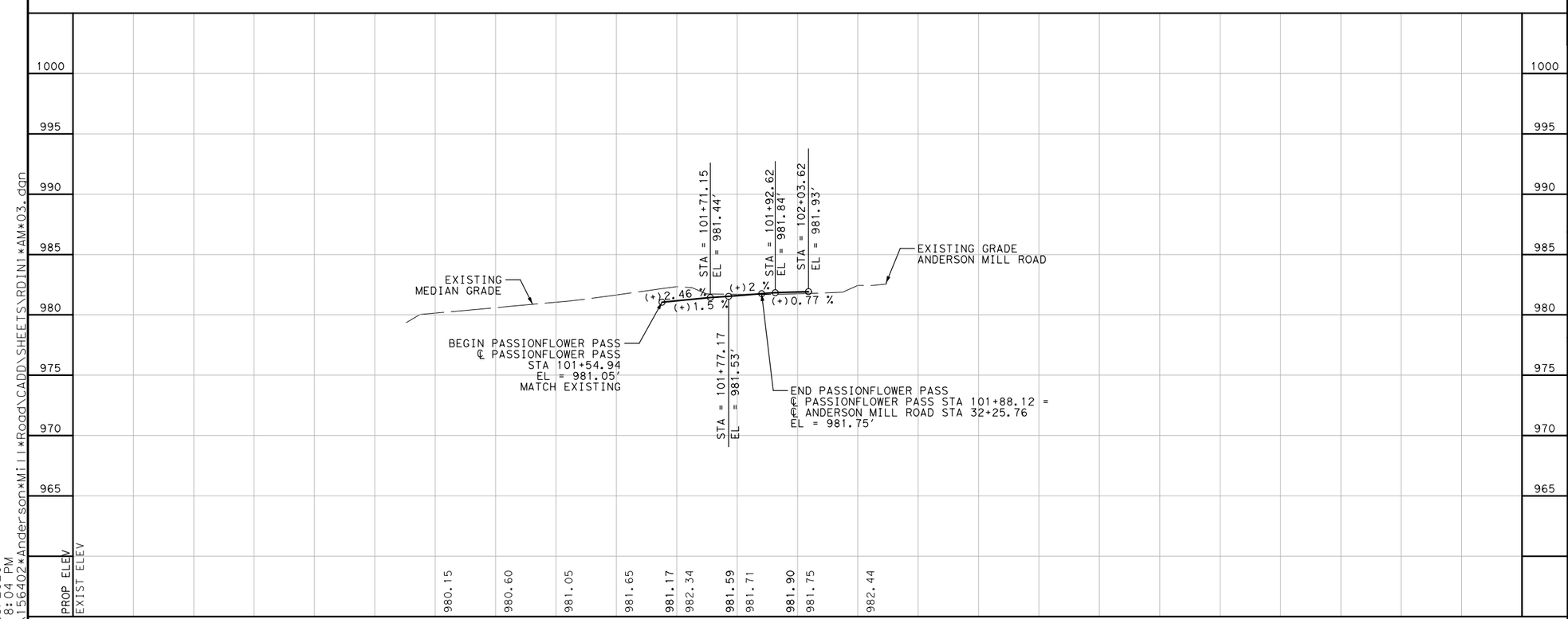

NUMBER	DATE	REVISION	APPROVED

STATE OF TEXAS
GREGORY C. CALKINS
111309
LICENSED
PROFESSIONAL ENGINEER
9/28/2020

Binkley & Barfield, Inc
consulting engineers
Texas Registration Number F-257

CEDAR PARK

ANDERSON MILL ROAD
INTERSECTION LAYOUTS
PASSIONFLOWER PASS

DESIGN BY:	GCC	SCALE:	
DRAWN BY:	DSH	HORIZ:	1"=40′
CHECKED BY:	BMB	VERT:	1"=10′
APPROVED BY:	BDR	SHEET:	3 OF 9
PROJECT NO:	156402	PAGE:	51
DATE:	9/28/2020		

9/28/2020
1:18:04 PM
I:\156402*Anderson*Mill*Road\CADD\SHEETS\RDIN1*AM*03.dgn

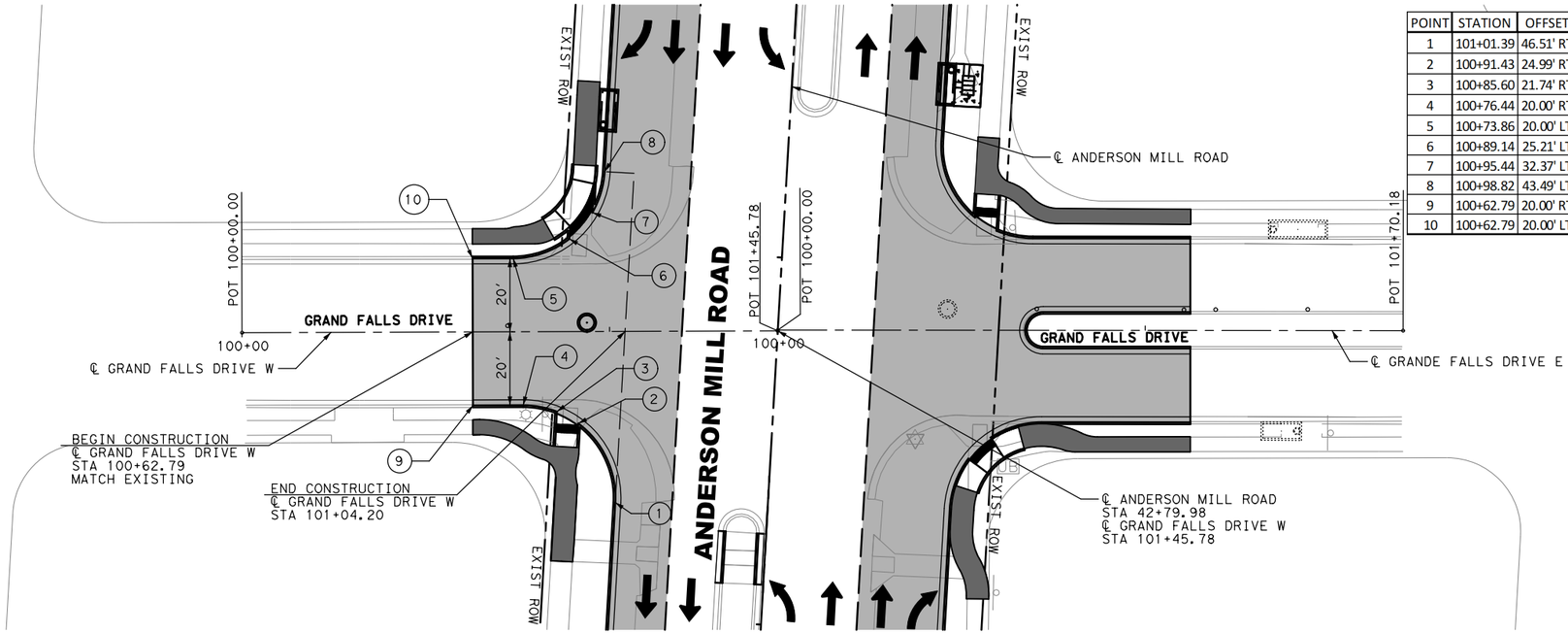

POINT	STATION	OFFSET	ELEVATION	DESCRIPTION
1	101+01.39	46.51' RT	988.51	PC 25' R
2	100+91.43	24.99' RT	988.29	6' SIDEWALK
3	100+85.60	21.74' RT	988.17	6' SIDEWALK
4	100+76.44	20.00' RT	987.91	PT 25' R
5	100+73.86	20.00' LT	987.84	PC 25' R
6	100+89.14	25.21' LT	988.36	6' SIDEWALK
7	100+95.44	32.37' LT	988.61	6' SIDEWALK
8	100+98.82	43.49' LT	988.89	PT 25' R
9	100+62.79	20.00' RT	987.54	MATCH EXISTING
10	100+62.79	20.00' LT	987.50	MATCH EXISTING

N

0' 10' 20' 40'

SCALE: 1"=40'

LEGEND

PROPOSED WIDENING

PROPOSED SIDEWALK

NOTES:

1. UNLESS OTHERWISE NOTED, DIMENSIONS AND PAVING POINTS ARE GIVEN TO NOMINAL FACE OF CURB.
2. SEE SIDEWALK AND PEDESTRIAN RAMP PLANS FOR ADDITIONAL INFORMATION.

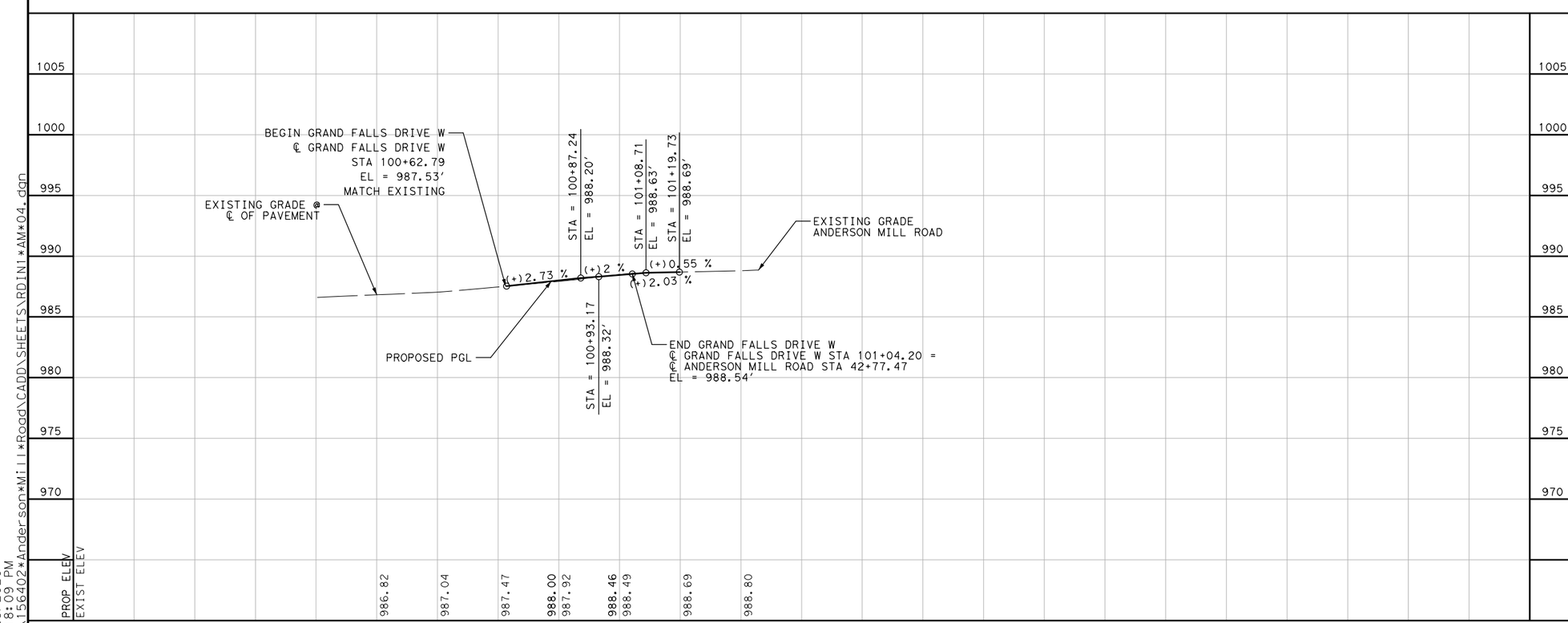

NUMBER	DATE	REVISION	APPROVED

STATE OF TEXAS
GREGORY C. CALKINS
111309
LICENSED
PROFESSIONAL ENGINEER
9/28/2020

Binkley & Barfield, Inc
consulting engineers
Texas Registration Number F-257

CEDAR PARK

ANDERSON MILL ROAD

INTERSECTION LAYOUTS
GRAND FALLS DRIVE W

DESIGN BY:	GCC	SCALE:	
DRAWN BY:	DSH	HORIZ:	1"=40'
CHECKED BY:	BMB	VERT:	1"=10'
APPROVED BY:	BDR	SHEET:	4 OF 9
PROJECT NO:	156402	PAGE:	52
DATE:	9/28/2020		

9/28/2020
1:18:09 PM
I:\156402*Anderson*Mill*Road\CADD\SHEETS\RDIN1*AM*04.dgn

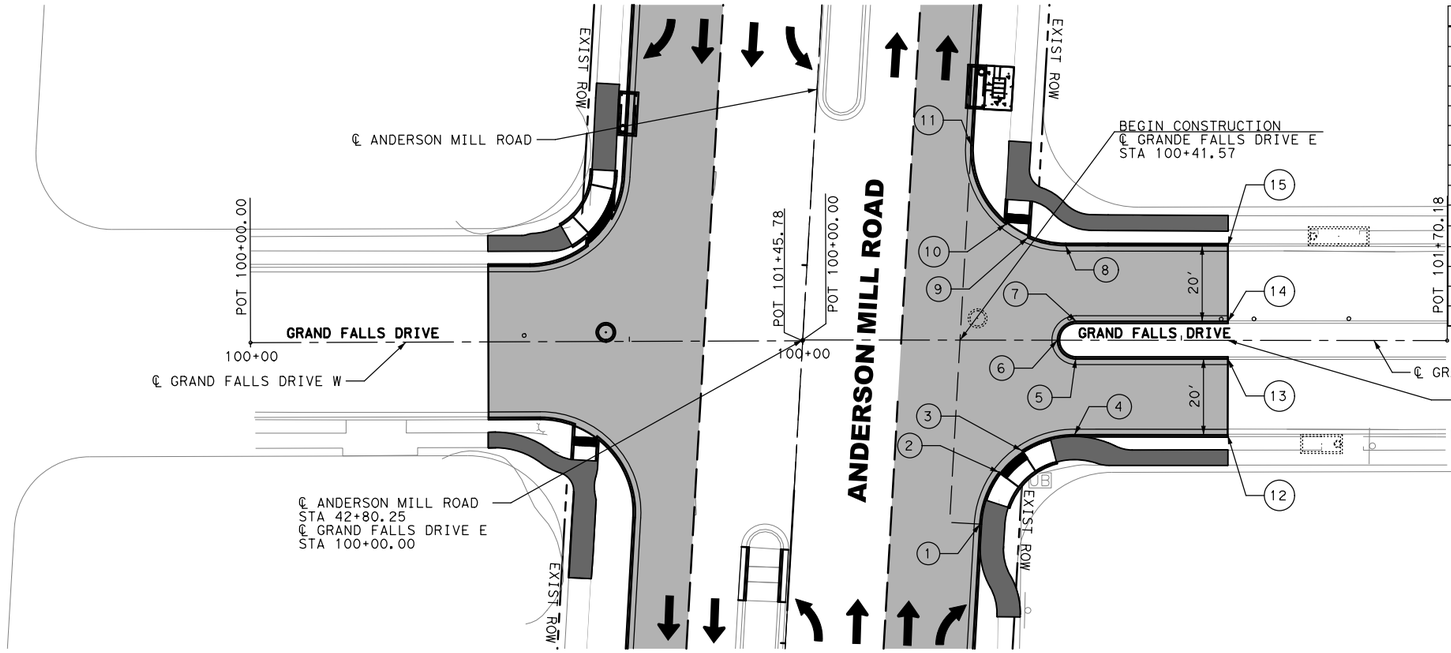

POINT	STATION	OFFSET	ELEVATION	DESCRIPTION
1	100+46.85	48.60' RT	988.24	PC 25' R
2	100+51.88	34.90' RT	988.79	6' SIDEWALK
3	100+57.94	29.20' RT	989.97	6' SIDEWALK
4	100+71.81	25.00' RT	989.37	PT 25' R
5	100+72.09	4.94' RT	990.03	PC 4.9' R
6	100+67.30	0.06' LT	989.85	4.9' R/MID POINT
7	100+72.22	4.92' LT	990.03	PT 4.9' R
8	100+69.41	25.00' LT	989.71	PC 25' R
9	100+59.44	27.08' LT	989.52	6' SIDEWALK
10	100+53.65	30.60' LT	989.41	6' SIDEWALK
11	100+44.45	51.37' LT	989.06	PT 25' R
12	101+12.26	25.00' RT	990.45	MATCH EXISTING
13	101+12.26	4.90' RT	990.95	MATCH EXISTING
14	101+12.26	4.98' LT	990.96	MATCH EXISTING
15	101+12.26	25.00' LT	990.50	MATCH EXISTING

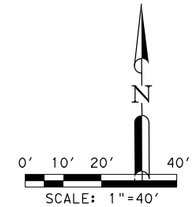

LEGEND

PROPOSED WIDENING

PROPOSED SIDEWALK

NOTES:

1. UNLESS OTHERWISE NOTED, DIMENSIONS AND PAVING POINTS ARE GIVEN TO NOMINAL FACE OF CURB.
2. SEE SIDEWALK AND PEDESTRIAN RAMP PLANS FOR ADDITIONAL INFORMATION.

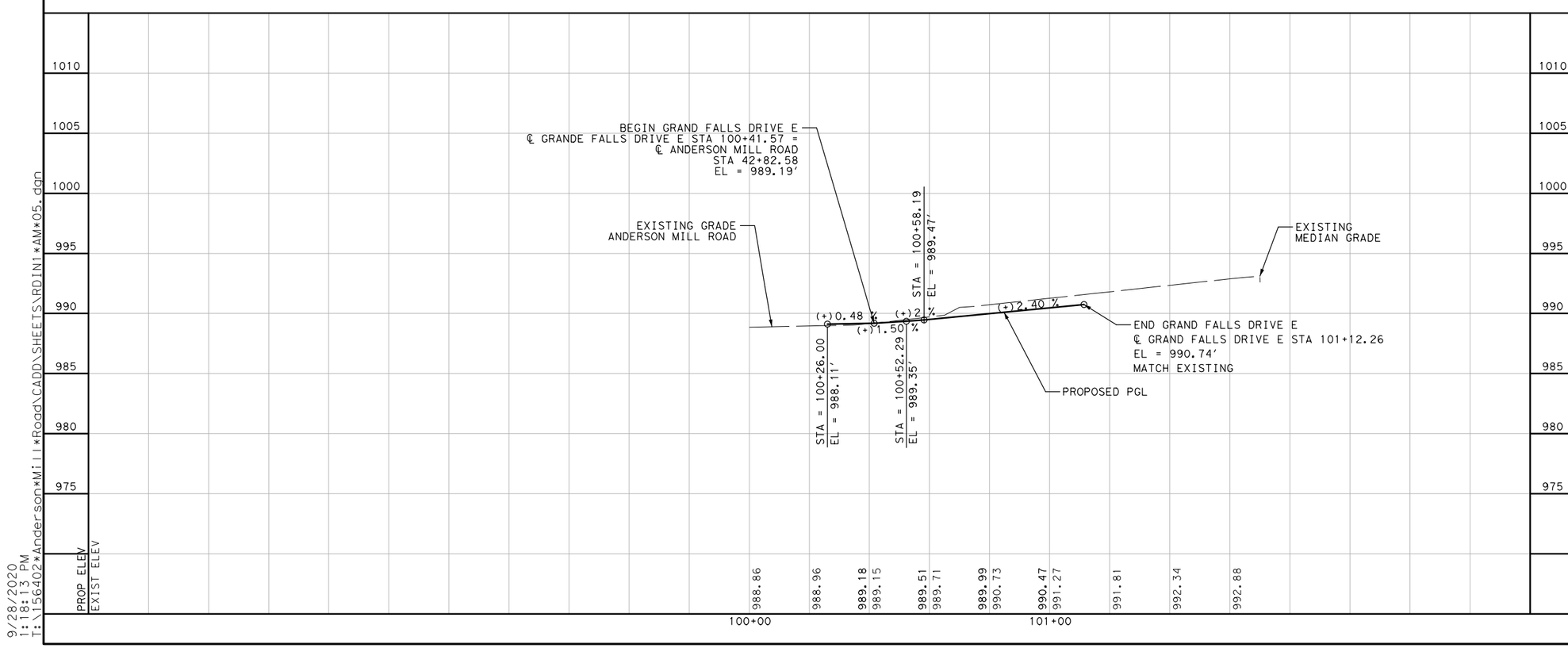

NUMBER	DATE	REVISION	APPROVED

STATE OF TEXAS
GREGORY C. CALKINS
111309
LICENSED
PROFESSIONAL ENGINEER
9/28/2020

Binkley & Barfield, Inc
consulting engineers
Texas Registration Number F-257

CEDAR PARK

ANDERSON MILL ROAD

INTERSECTION LAYOUTS
GRAND FALLS DRIVE E

DESIGN BY:	GCC	SCALE: HORIZ:	1"=40'
DRAWN BY:	DSH	VERT:	1"=10'
CHECKED BY:	BMB	SHEET:	5 OF 9
APPROVED BY:	BDR		
PROJECT NO:	156402	PAGE:	53
DATE:	9/28/2020		

9/28/2020
1:18:13 PM
I:\156402*Anderson*Mill*Road\CADD\SHEETS\RDIN1*AM*05.dgn

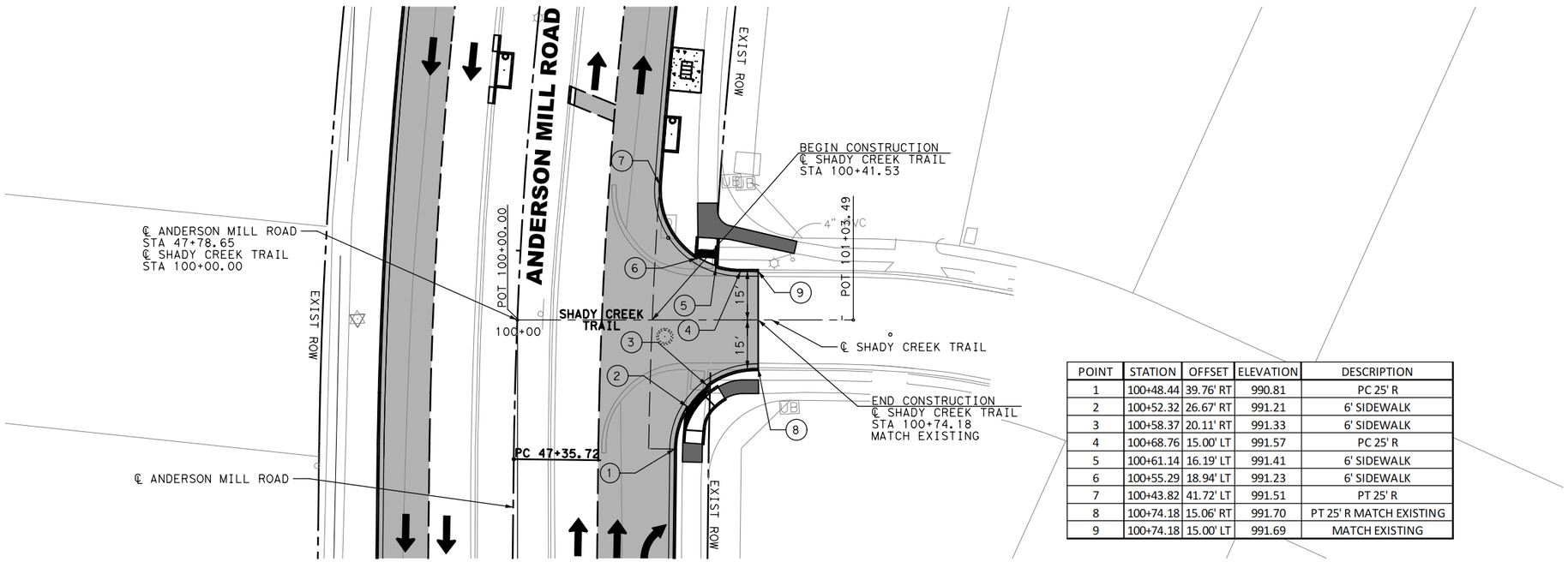

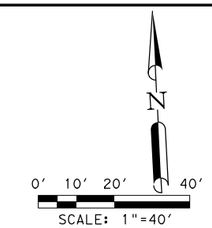

LEGEND

PROPOSED WIDENING

PROPOSED SIDEWALK

POINT	STATION	OFFSET	ELEVATION	DESCRIPTION
1	100+48.44	39.76' RT	990.81	PC 25' R
2	100+52.32	26.67' RT	991.21	6' SIDEWALK
3	100+58.37	20.11' RT	991.33	6' SIDEWALK
4	100+68.76	15.00' LT	991.57	PC 25' R
5	100+61.14	16.19' LT	991.41	6' SIDEWALK
6	100+55.29	18.94' LT	991.23	6' SIDEWALK
7	100+43.82	41.72' LT	991.51	PT 25' R
8	100+74.18	15.06' RT	991.70	PT 25' R MATCH EXISTING
9	100+74.18	15.00' LT	991.69	MATCH EXISTING

NOTES:

1. UNLESS OTHERWISE NOTED, DIMENSIONS AND PAVING POINTS ARE GIVEN TO NOMINAL FACE OF CURB.
2. SEE SIDEWALK AND PEDESTRIAN RAMP PLANS FOR ADDITIONAL INFORMATION.

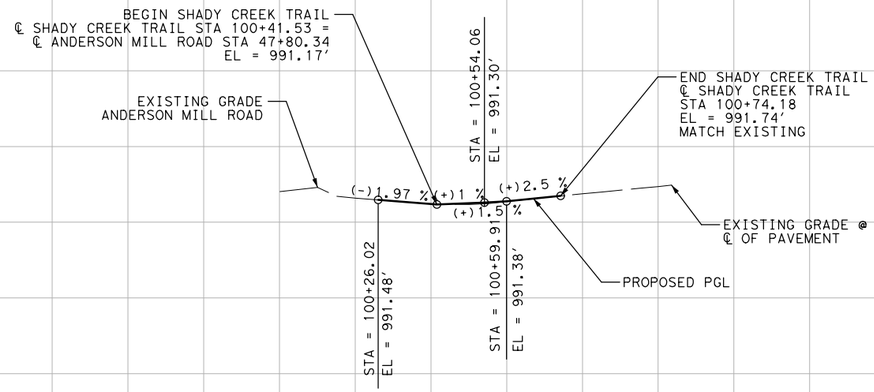

NUMBER	DATE	REVISION	APPROVED

STATE OF TEXAS
GREGORY C. CALKINS
111309
LICENSED
PROFESSIONAL ENGINEER
9/28/2020

Binkley & Barfield, Inc
consulting engineers
Texas Registration Number F-257

CEDAR PARK

ANDERSON MILL ROAD
INTERSECTION LAYOUTS
SHADY CREEK TRAIL

DESIGN BY:	GCC
DRAWN BY:	DSH
CHECKED BY:	BMB
APPROVED BY:	BDR
PROJECT NO:	156402
DATE:	9/28/2020

SCALE:
HORIZ: 1"=40'
VERT: 1"=10'

SHEET: 6 OF 9

PAGE: 54

9/28/2020
1:18:17 PM
I:\156402*Anderson*Mill*Road\CADD\SHEETS\RDIN1*AM*06.dgn

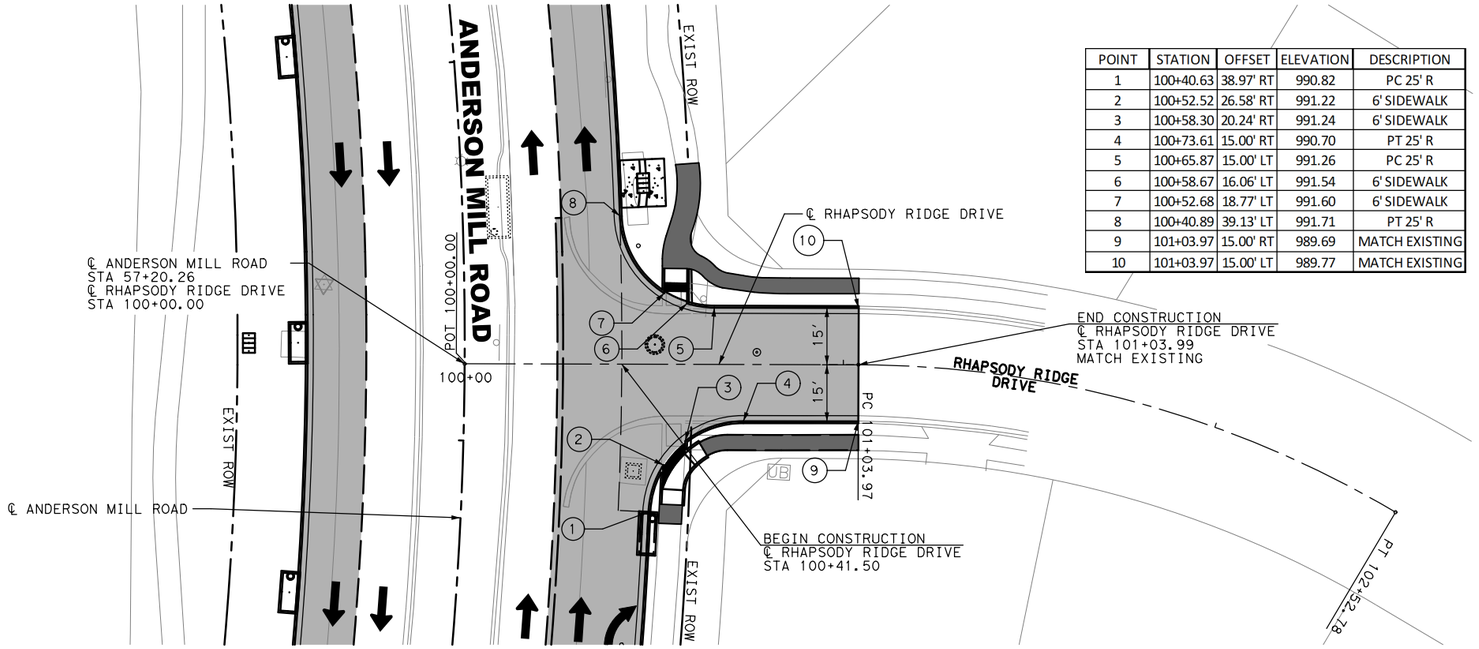

POINT	STATION	OFFSET	ELEVATION	DESCRIPTION
1	100+40.63	38.97' RT	990.82	PC 25' R
2	100+52.52	26.58' RT	991.22	6' SIDEWALK
3	100+58.30	20.24' RT	991.24	6' SIDEWALK
4	100+73.61	15.00' RT	990.70	PT 25' R
5	100+65.87	15.00' LT	991.26	PC 25' R
6	100+58.67	16.06' LT	991.54	6' SIDEWALK
7	100+52.68	18.77' LT	991.60	6' SIDEWALK
8	100+40.89	39.13' LT	991.71	PT 25' R
9	101+03.97	15.00' RT	989.69	MATCH EXISTING
10	101+03.97	15.00' LT	989.77	MATCH EXISTING

N

0' 10' 20' 40'

SCALE: 1"=40'

LEGEND

PROPOSED WIDENING

PROPOSED SIDEWALK

NOTES:

1. UNLESS OTHERWISE NOTED, DIMENSIONS AND PAVING POINTS ARE GIVEN TO NOMINAL FACE OF CURB.
2. SEE SIDEWALK AND PEDESTRIAN RAMP PLANS FOR ADDITIONAL INFORMATION.

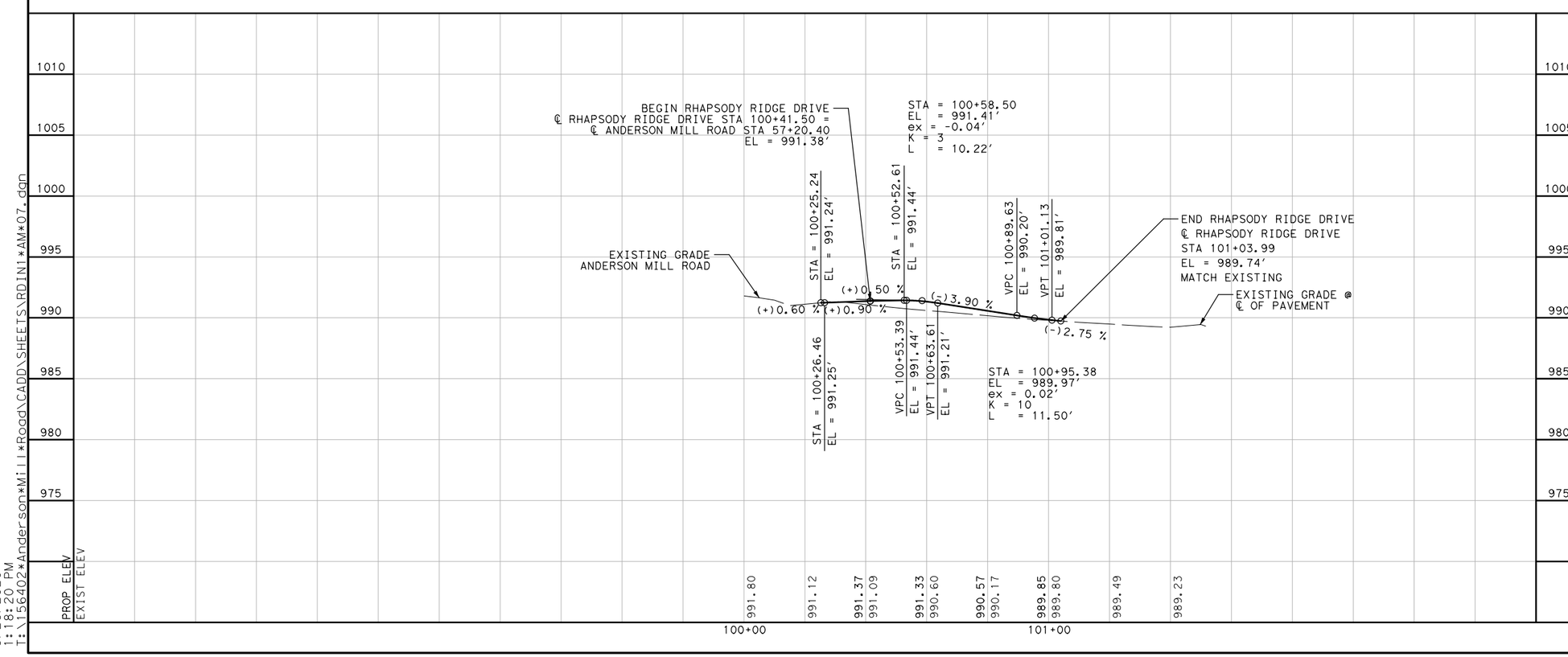

NUMBER	DATE	REVISION	APPROVED

STATE OF TEXAS
GREGORY C. CALKINS
111309
LICENSED
PROFESSIONAL ENGINEER

9/28/2020

Binkley & Barfield, Inc
consulting engineers
Texas Registration Number F-257

CEDAR PARK

ANDERSON MILL ROAD

INTERSECTION LAYOUTS
RHAPSODY RIDGE DRIVE

DESIGN BY:	GCC
DRAWN BY:	DSH
CHECKED BY:	BMB
APPROVED BY:	BDR
PROJECT NO:	156402
DATE:	9/28/2020

SCALE:
HORIZ: 1"=40'
VERT: 1"=10'

SHEET: 7 OF 9

PAGE: 55

9/28/2020
1:18:20 PM
I:\156402*Anderson*Mill*Road\CADD\SHEETS\RDIN1*AM*07.dgn

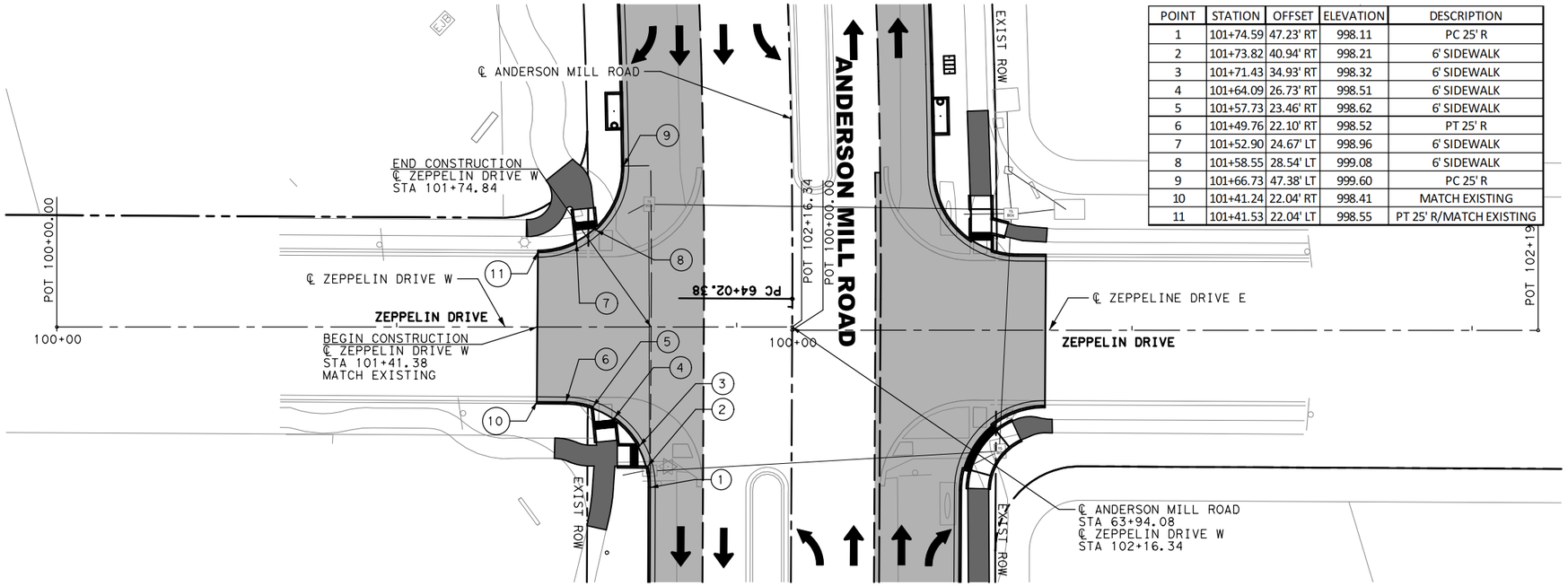

POINT	STATION	OFFSET	ELEVATION	DESCRIPTION
1	101+74.59	47.23' RT	998.11	PC 25' R
2	101+73.82	40.94' RT	998.21	6' SIDEWALK
3	101+71.43	34.93' RT	998.32	6' SIDEWALK
4	101+64.09	26.73' RT	998.51	6' SIDEWALK
5	101+57.73	23.46' RT	998.62	6' SIDEWALK
6	101+49.76	22.10' RT	998.52	PT 25' R
7	101+52.90	24.67' LT	998.96	6' SIDEWALK
8	101+58.55	28.54' LT	999.08	6' SIDEWALK
9	101+66.73	47.38' LT	999.60	PC 25' R
10	101+41.24	22.04' RT	998.41	MATCH EXISTING
11	101+41.53	22.04' LT	998.55	PT 25' R/MATCH EXISTING

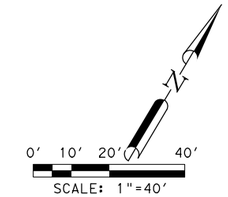

LEGEND

PROPOSED WIDENING

PROPOSED SIDEWALK

NOTES:

1. UNLESS OTHERWISE NOTED, DIMENSIONS AND PAVING POINTS ARE GIVEN TO NOMINAL FACE OF CURB.
2. SEE SIDEWALK AND PEDESTRIAN RAMP PLANS FOR ADDITIONAL INFORMATION.

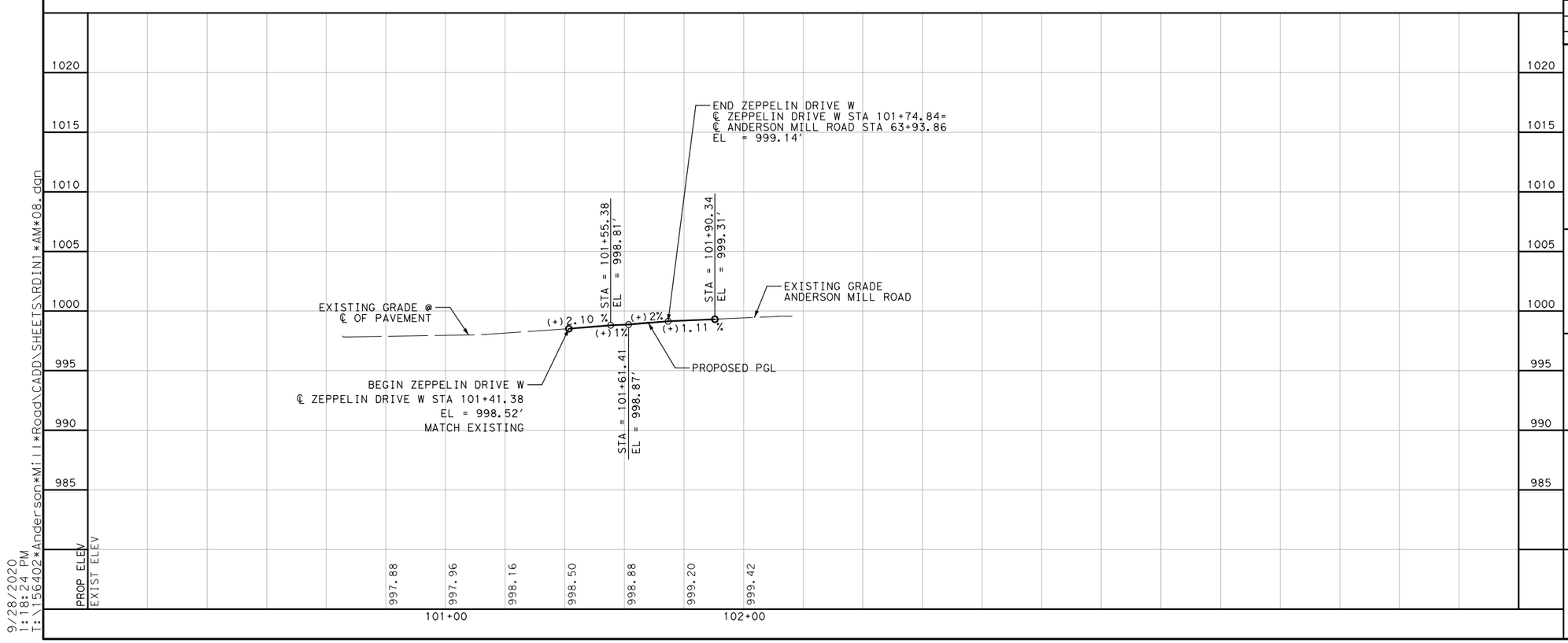

NUMBER	DATE	REVISION	APPROVED

STATE OF TEXAS
GREGORY C. CALKINS
111309
LICENSED
PROFESSIONAL ENGINEER
9/28/2020

Binkley & Barfield, Inc
consulting engineers
Texas Registration Number F-257

CEDAR PARK

ANDERSON MILL ROAD
INTERSECTION LAYOUTS
ZEPPELIN DRIVE W

DESIGN BY:	GCC
DRAWN BY:	DSH
CHECKED BY:	BMB
APPROVED BY:	BDR
PROJECT NO:	156402
DATE:	9/28/2020

SCALE:
HORIZ: 1"=40'
VERT: 1"=10'

SHEET: 8 OF 9

PAGE: 56

9/28/2020
1:18:24 PM
I:\156402*Anderson*Mill*Road\CADD\SHEETS\RDIN1*AM*08.dgn

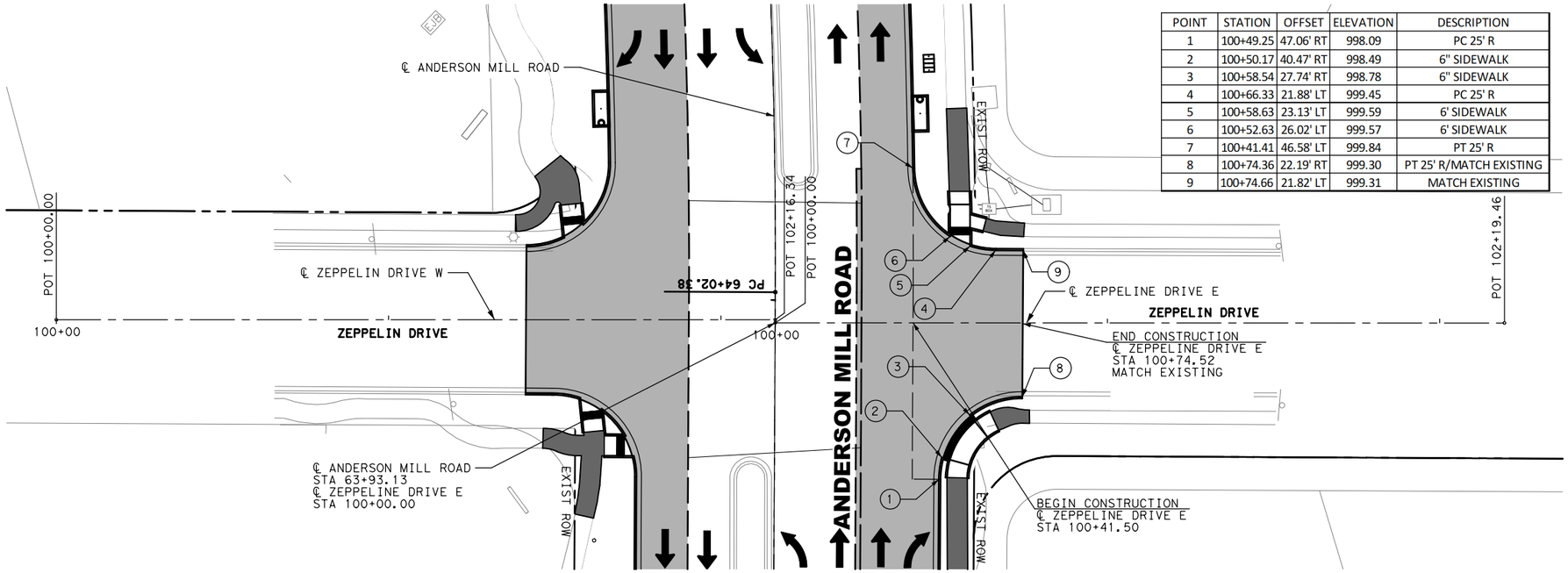

POINT	STATION	OFFSET	ELEVATION	DESCRIPTION
1	100+49.25	47.06' RT	998.09	PC 25' R
2	100+50.17	40.47' RT	998.49	6" SIDEWALK
3	100+58.54	27.74' RT	998.78	6" SIDEWALK
4	100+66.33	21.88' LT	999.45	PC 25' R
5	100+58.63	23.13' LT	999.59	6' SIDEWALK
6	100+52.63	26.02' LT	999.57	6' SIDEWALK
7	100+41.41	46.58' LT	999.84	PT 25' R
8	100+74.36	22.19' RT	999.30	PT 25' R/MATCH EXISTING
9	100+74.66	21.82' LT	999.31	MATCH EXISTING

N

0' 10' 20' 40'

SCALE: 1"=40'

LEGEND

PROPOSED WIDENING

PROPOSED SIDEWALK

NOTES:

1. UNLESS OTHERWISE NOTED, DIMENSIONS AND PAVING POINTS ARE GIVEN TO NOMINAL FACE OF CURB.
2. SEE SIDEWALK AND PEDESTRIAN RAMP PLANS FOR ADDITIONAL INFORMATION.

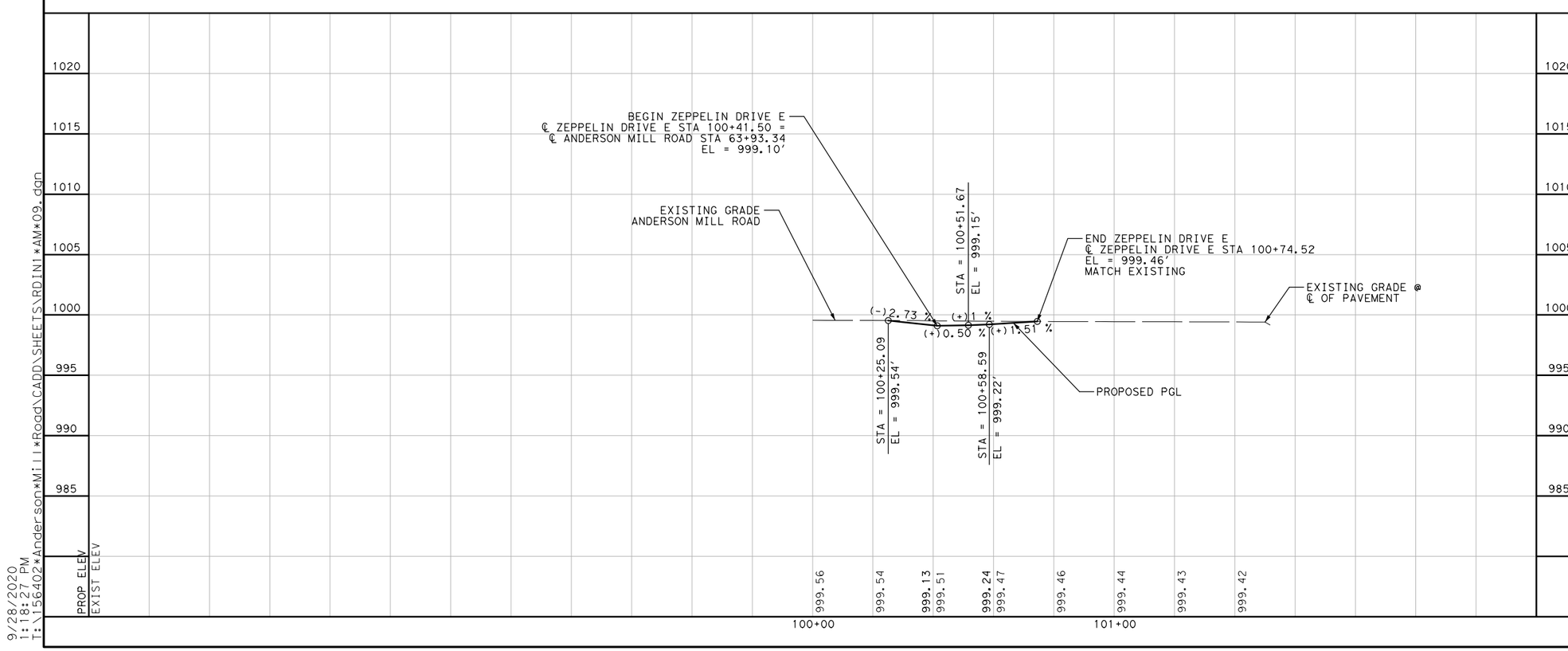

NUMBER	DATE	REVISION	APPROVED

STATE OF TEXAS
GREGORY C. CALKINS
111309
LICENSED
PROFESSIONAL ENGINEER
9/28/2020

Binkley & Barfield, Inc
consulting engineers
Texas Registration Number F-257

CEDAR PARK

ANDERSON MILL ROAD
INTERSECTION LAYOUTS
ZEPPELIN DRIVE E

DESIGN BY:	GCC
DRAWN BY:	DSH
CHECKED BY:	BMB
APPROVED BY:	BDR
PROJECT NO:	156402
DATE:	9/28/2020

SCALE:
HORIZ: 1"=40'
VERT: 1"=10'

SHEET: 9 OF 9

PAGE: 57

9/28/2020
1:18:27 PM
I:\156402*Anderson*Mill*Road\CADD\SHEETS\RDIN1*AM*09.dgn

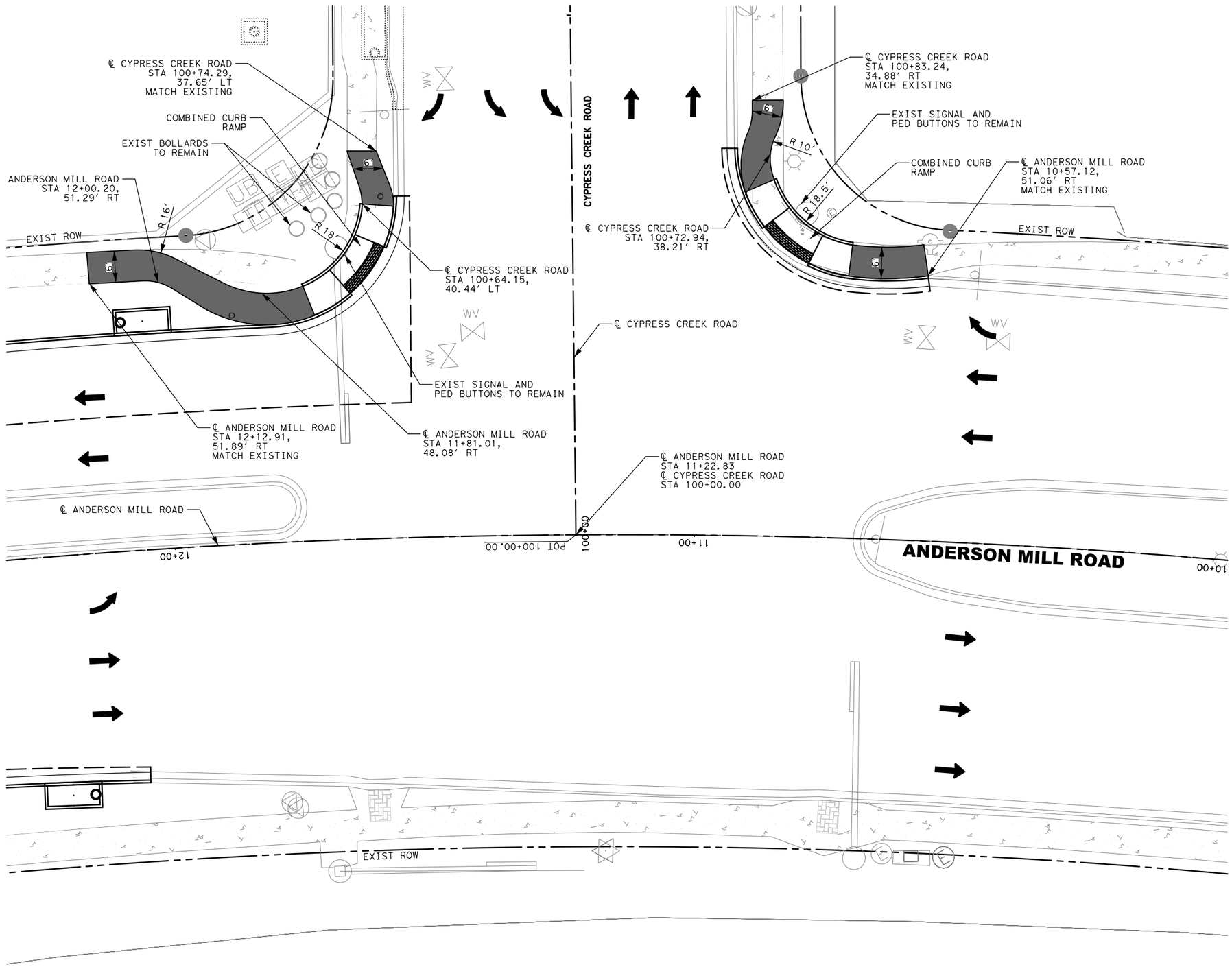

0' 5' 10' 20'
SCALE: 1"=20'

LEGEND

PROPOSED 4" SIDEWALK

NOTES:

1. THE CROSS SLOPE OF PEDESTRIAN CROSSINGS SHALL NOT EXCEED 2%.
2. SEE INTERSECTION LAYOUTS AND ROADWAY P&P SHEETS FOR ADDITIONAL INFORMATION.
3. REFER TO SIGNING AND STRIPING SHEETS FOR CROSSWALK STRIPING DETAILS.

NUMBER	DATE	REVISION	APPROVED

STATE OF TEXAS
GREGORY C. CALKINS
111309
LICENSED
PROFESSIONAL ENGINEER
9/28/2020

Binkley & Barfield, Inc
consulting engineers
Texas Registration Number F-257

CEDAR PARK

ANDERSON MILL ROAD

SIDEWALK AND PEDESTRIAN RAMP PLANS

CYPRESS CREEK ROAD

DESIGN BY:	GCC	SCALE:	1" = 20'
DRAWN BY:	DSH		
CHECKED BY:	BMB		
APPROVED BY:	BDR	SHEET:	1 OF 9
PROJECT NO:	156402		
DATE:	9/28/2020	PAGE:	58

9/28/2020
1:18:31 PM
T:\156402*Anderson*Mill*Road\CADD\SHEETS\RDV11*AM*01.dgn

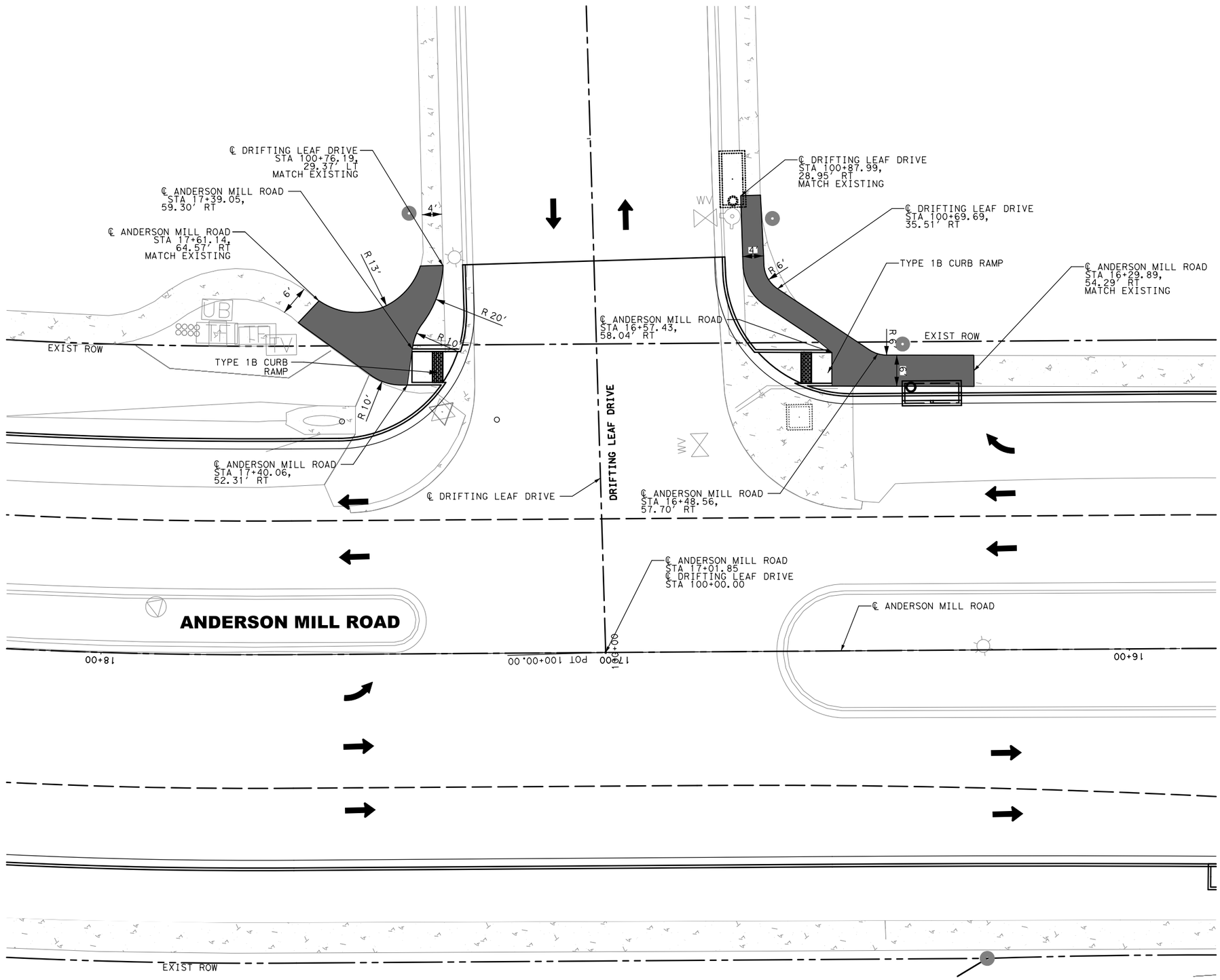

0' 5' 10' 20'
SCALE: 1"=20'

LEGEND

PROPOSED 4" SIDEWALK

NOTES:

1. THE CROSS SLOPE OF PEDESTRIAN CROSSINGS SHALL NOT EXCEED 2%.
2. SEE INTERSECTION LAYOUTS AND ROADWAY P&P SHEETS FOR ADDITIONAL INFORMATION.
3. REFER TO SIGNING AND STRIPING SHEETS FOR CROSSWALK STRIPING DETAILS.

NUMBER	DATE	REVISION	APPROVED

STATE OF TEXAS
GREGORY C. CALKINS
111309
LICENSED
PROFESSIONAL ENGINEER
9/28/2020

Binkley & Barfield, Inc
consulting engineers
Texas Registration Number F-257

CEDAR PARK

ANDERSON MILL ROAD

SIDEWALK AND PEDESTRIAN RAMP PLANS

DRIFTING LEAF DRIVE

DESIGN BY:	GCC
DRAWN BY:	DSH
CHECKED BY:	BMB
APPROVED BY:	BDR
PROJECT NO:	156402
DATE:	9/28/2020

SCALE: 1" = 20'

SHEET: 2 OF 9

PAGE: 59

9/28/2020
1:18:35 PM
T:\156402*Anderson*Mill*Road\CADD\SHEETS\RDV11*AM*02.dgn

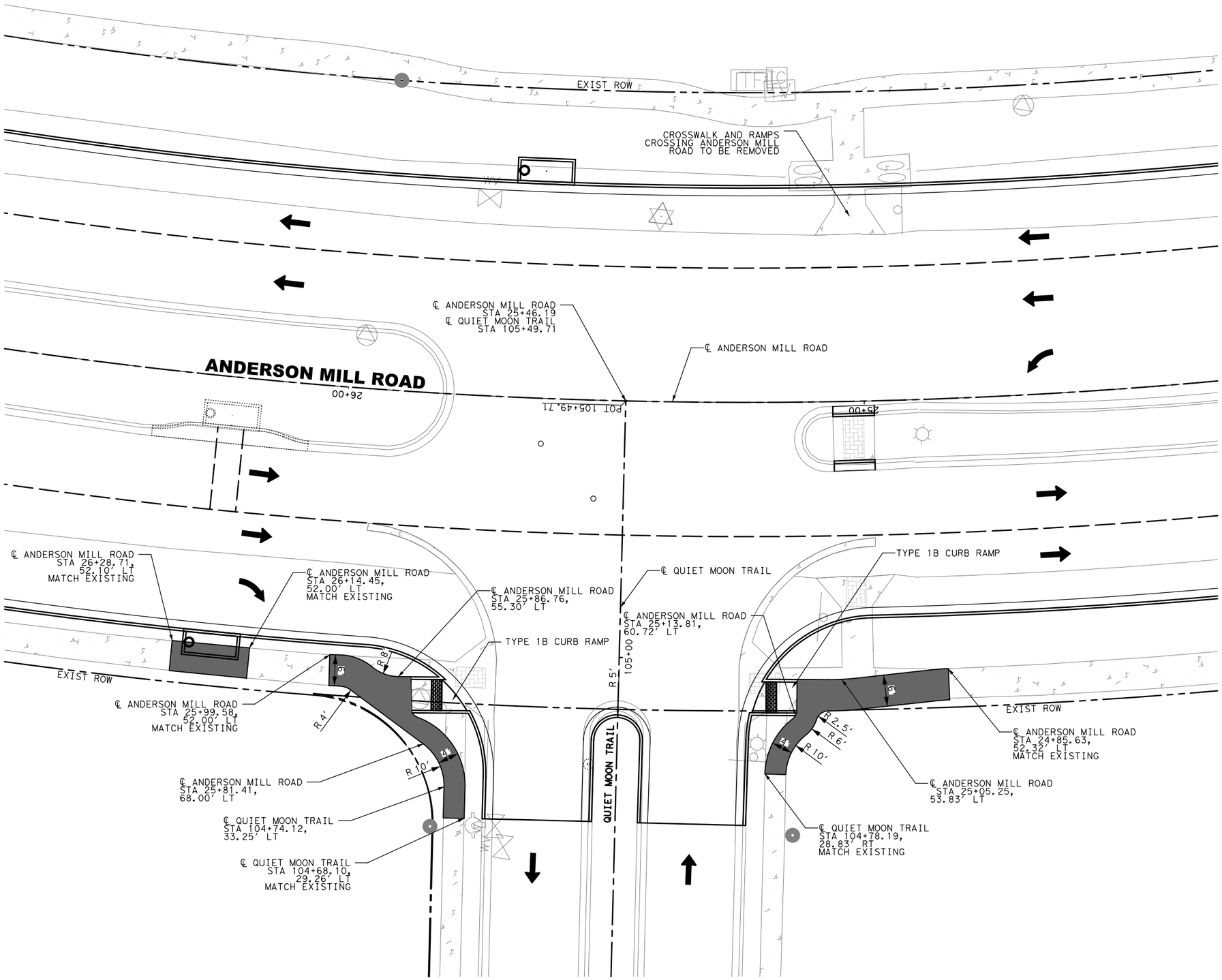

0' 5' 10' 20'
SCALE: 1"=20'

LEGEND

PROPOSED 4" SIDEWALK

NOTES:

1. THE CROSS SLOPE OF PEDESTRIAN CROSSINGS SHALL NOT EXCEED 2%.
2. SEE INTERSECTION LAYOUTS AND ROADWAY P&P SHEETS FOR ADDITIONAL INFORMATION.
3. REFER TO SIGNING AND STRIPING SHEETS FOR CROSSWALK STRIPING DETAILS.

NUMBER	DATE	REVISION	APPROVED

STATE OF TEXAS
GREGORY C. CALKINS
111309
LICENSED
PROFESSIONAL ENGINEER
9/28/2020

Binkley & Barfield, Inc
consulting engineers
Texas Registration Number F-257

CEDAR PARK

ANDERSON MILL ROAD

SIDEWALK AND PEDESTRIAN RAMP PLANS

QUIET MOON TRAIL

DESIGN BY:	GCC	SCALE:	1" = 20'
DRAWN BY:	DSH		
CHECKED BY:	BMB		
APPROVED BY:	BDR	SHEET:	3 OF 9
PROJECT NO:	156402		
DATE:	9/28/2020	PAGE:	60

9/28/2020
1:18:39 PM
T:\156402*Anderson*Mill*Road\CADD\SHEETS\RDVI1*AM*03.dgn

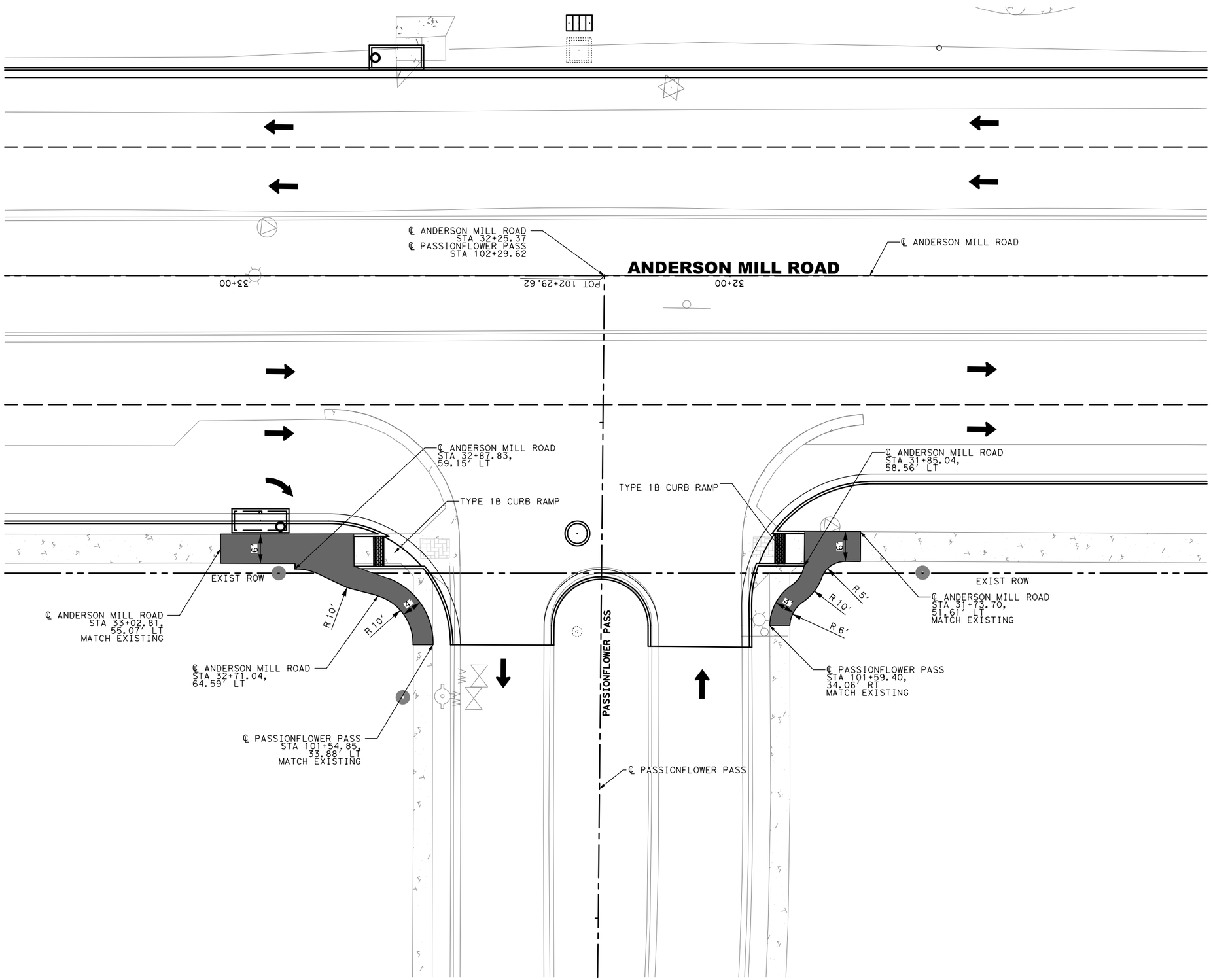

0' 5' 10' 20'
SCALE: 1"=20'

LEGEND

PROPOSED 4" SIDEWALK

NOTES:

1. THE CROSS SLOPE OF PEDESTRIAN CROSSINGS SHALL NOT EXCEED 2%.
2. SEE INTERSECTION LAYOUTS AND ROADWAY P&P SHEETS FOR ADDITIONAL INFORMATION.
3. REFER TO SIGNING AND STRIPING SHEETS FOR CROSSWALK STRIPING DETAILS.

NUMBER	DATE	REVISION	APPROVED

STATE OF TEXAS
GREGORY C. CALKINS
111309
LICENSED
PROFESSIONAL ENGINEER
9/28/2020

Binkley & Barfield, Inc
consulting engineers
Texas Registration Number F-257

CEDAR PARK

ANDERSON MILL ROAD

SIDEWALK AND PEDESTRIAN RAMP PLANS

PASSIONFLOWER PASS

DESIGN BY:	GCC	SCALE:	1" = 20'
DRAWN BY:	DSH		
CHECKED BY:	BMB		
APPROVED BY:	BDR	SHEET:	4 OF 9
PROJECT NO:	156402		
DATE:	9/28/2020	PAGE:	61

9/28/2020
1:18:43 PM
I:\156402*Anderson*Mill*Road\CADD\SHEETS\RDV11*AM*04.dgn

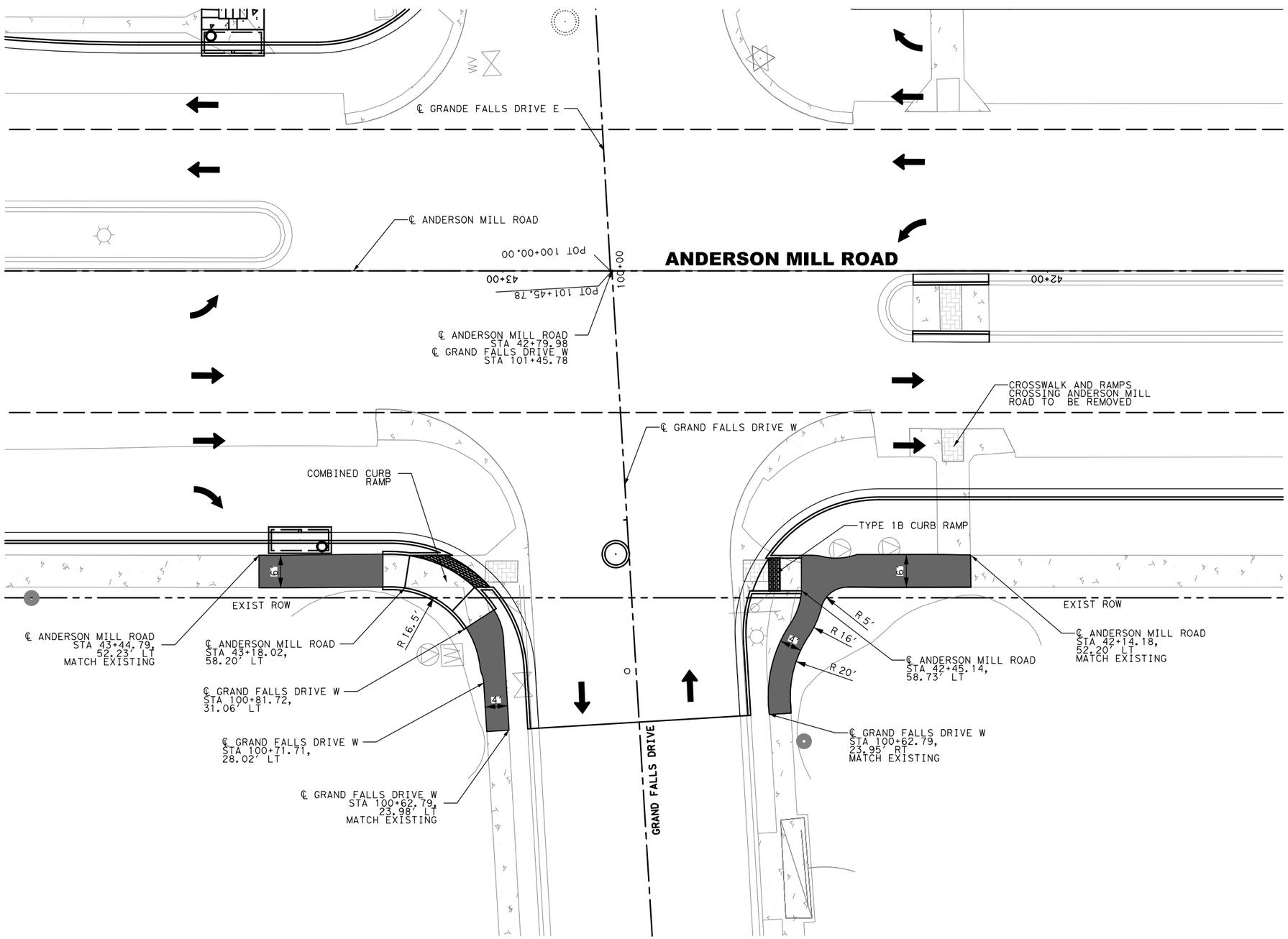

0' 5' 10' 20'
SCALE: 1"=20'

LEGEND

PROPOSED 4" SIDEWALK

NOTES:

1. THE CROSS SLOPE OF PEDESTRIAN CROSSINGS SHALL NOT EXCEED 2%.
2. SEE INTERSECTION LAYOUTS AND ROADWAY P&P SHEETS FOR ADDITIONAL INFORMATION.
3. REFER TO SIGNING AND STRIPING SHEETS FOR CROSSWALK STRIPING DETAILS.

NUMBER	DATE	REVISION	APPROVED

STATE OF TEXAS
GREGORY C. CALKINS
111309
LICENSED
PROFESSIONAL ENGINEER
9/28/2020

Binkley & Barfield, Inc
consulting engineers
Texas Registration Number F-257

CEDAR PARK

ANDERSON MILL ROAD

SIDEWALK AND PEDESTRIAN RAMP PLANS

GRAND FALLS DRIVE W

DESIGN BY:	GCC	SCALE:	1" = 20'
DRAWN BY:	DSH		
CHECKED BY:	BMB		
APPROVED BY:	BDR	SHEET:	5 OF 9
PROJECT NO:	156402		
DATE:	9/28/2020	PAGE:	62

9/28/2020
1:18:48 PM
I:\156402*Anderson*Mill*Road\CADD\SHEETS\RDV11*AM*05.dgn

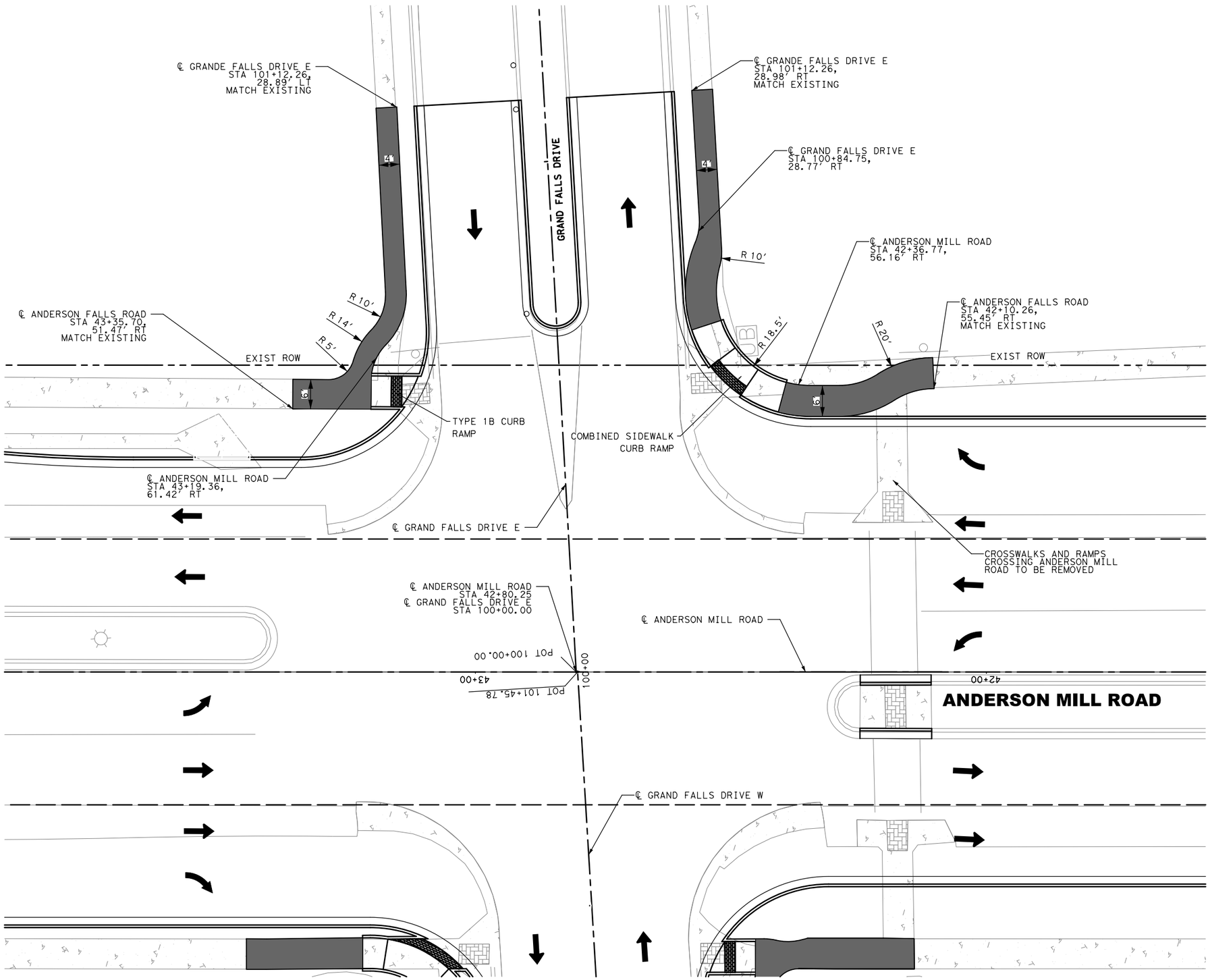

0' 5' 10' 20'
SCALE: 1"=20'

LEGEND

PROPOSED 4" SIDEWALK

NOTES:

1. THE CROSS SLOPE OF PEDESTRIAN CROSSINGS SHALL NOT EXCEED 2%.
2. SEE INTERSECTION LAYOUTS AND ROADWAY P&P SHEETS FOR ADDITIONAL INFORMATION.
3. REFER TO SIGNING AND STRIPING SHEETS FOR CROSSWALK STRIPING DETAILS.

NUMBER	DATE	REVISION	APPROVED

STATE OF TEXAS
GREGORY C. CALKINS
111309
LICENSED
PROFESSIONAL ENGINEER
9/28/2020

Binkley & Barfield, Inc
consulting engineers
Texas Registration Number F-257

CEDAR PARK

ANDERSON MILL ROAD

SIDEWALK AND PEDESTRIAN RAMP PLANS

GRAND FALLS DRIVE E

DESIGN BY:	GCC	SCALE:	1" = 20'
DRAWN BY:	DSH		
CHECKED BY:	BMB		
APPROVED BY:	BDR	SHEET:	6 OF 9
PROJECT NO:	156402		
DATE:	9/28/2020	PAGE:	63

9/28/2020
1:18:54 PM
T:\156402*AndersonMill*Road\CADD\SHEETS\RDV11*AM*05A.dgn

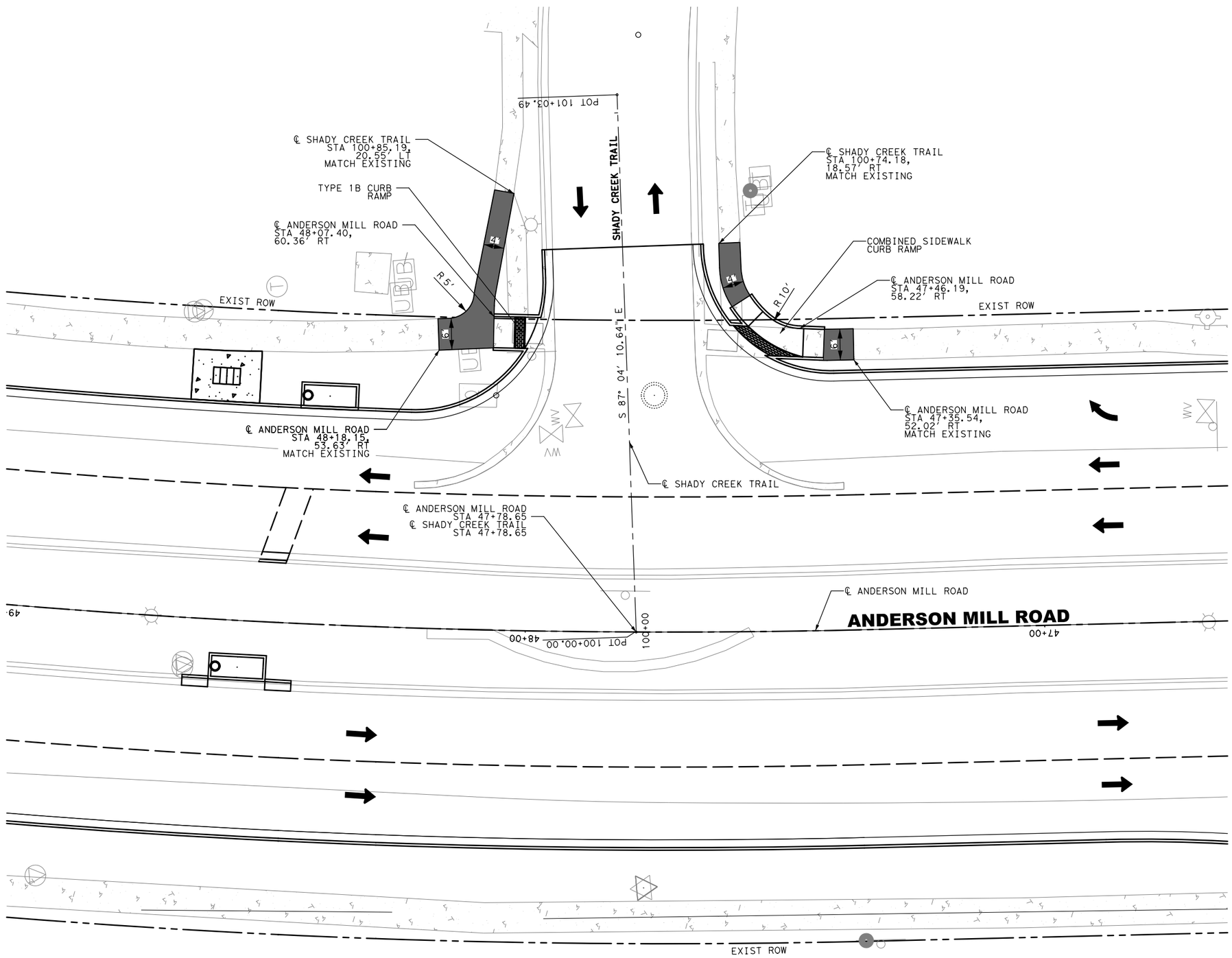

0' 5' 10' 20'
SCALE: 1"=20'

LEGEND

PROPOSED 4" SIDEWALK

NOTES:

1. THE CROSS SLOPE OF PEDESTRIAN CROSSINGS SHALL NOT EXCEED 2%.
2. SEE INTERSECTION LAYOUTS AND ROADWAY P&P SHEETS FOR ADDITIONAL INFORMATION.
3. REFER TO SIGNING AND STRIPING SHEETS FOR CROSSWALK STRIPING DETAILS.

NUMBER	DATE	REVISION	APPROVED

STATE OF TEXAS
GREGORY C. CALKINS
111309
LICENSED
PROFESSIONAL ENGINEER
9/28/2020

Binkley & Barfield, Inc
consulting engineers
Texas Registration Number F-257

CEDAR PARK

ANDERSON MILL ROAD
SIDEWALK AND PEDESTRIAN RAMP PLANS
SHADY CREEK TRAIL

DESIGN BY:	GCC	SCALE:	1" = 20'
DRAWN BY:	DSH		
CHECKED BY:	BMB	SHEET:	7 OF 9
APPROVED BY:	BDR		
PROJECT NO:	156402	PAGE:	64
DATE:	9/28/2020		

9/28/2020
1:18:58 PM
T:\156402*Anderson*Mill*Road\CADD\SHEETS\RDV11*AM*06.dgn

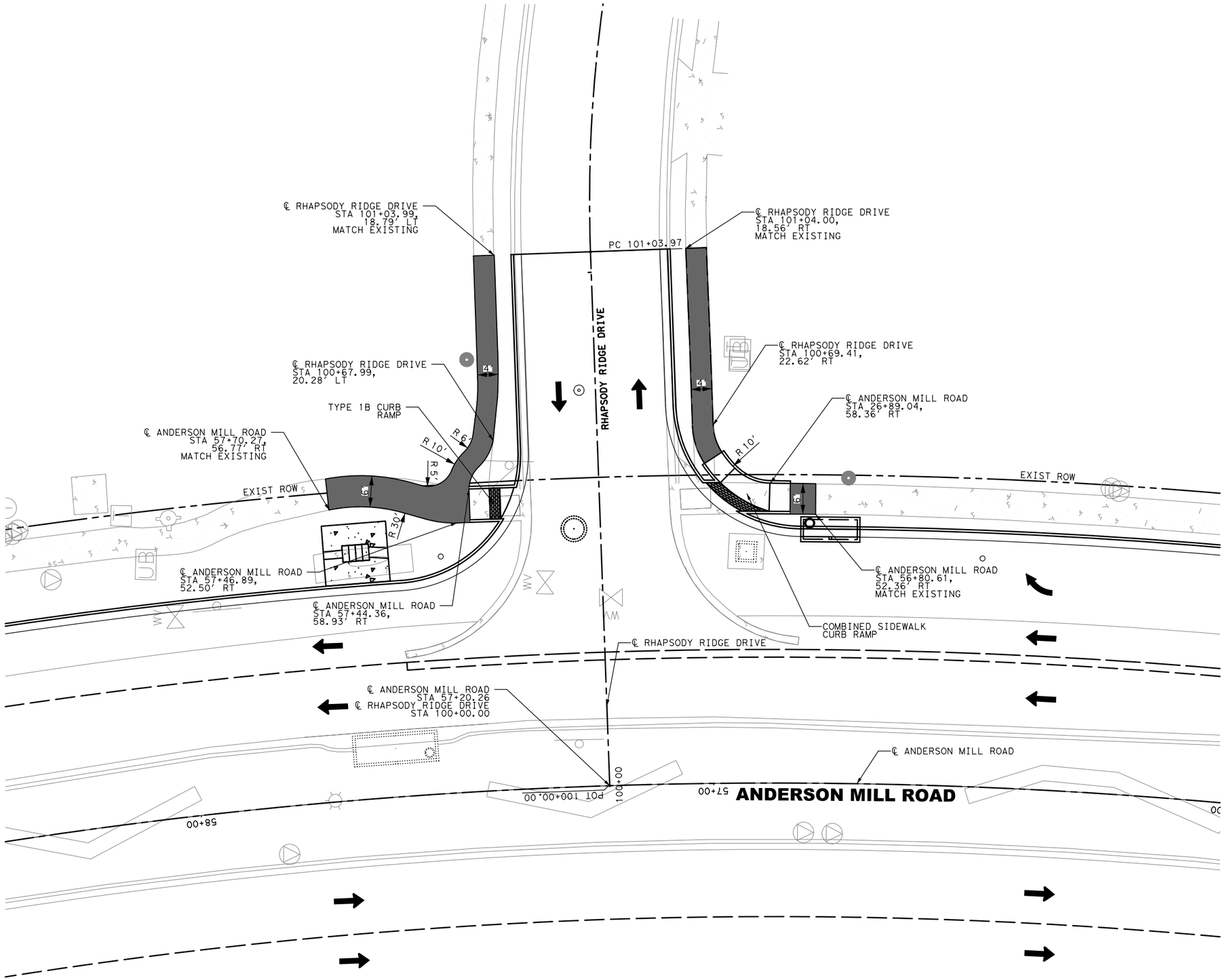

0' 5' 10' 20'
SCALE: 1"=20'

LEGEND

PROPOSED 4" SIDEWALK

NOTES:

1. THE CROSS SLOPE OF PEDESTRIAN CROSSINGS SHALL NOT EXCEED 2%.
2. SEE INTERSECTION LAYOUTS AND ROADWAY P&P SHEETS FOR ADDITIONAL INFORMATION.
3. REFER TO SIGNING AND STRIPING SHEETS FOR CROSSWALK STRIPING DETAILS.

NUMBER	DATE	REVISION	APPROVED

STATE OF TEXAS
GREGORY C. CALKINS
111309
LICENSED
PROFESSIONAL ENGINEER
9/28/2020

Binkley & Barfield, Inc
consulting engineers
Texas Registration Number F-257

CEDAR PARK

ANDERSON MILL ROAD

SIDEWALK AND PEDESTRIAN RAMP PLANS

RHAPSODY RIDGE DRIVE

DESIGN BY:	GCC	SCALE:	1" = 20'
DRAWN BY:	DSH		
CHECKED BY:	BMB		
APPROVED BY:	BDR	SHEET:	8 OF 9
PROJECT NO:	156402		
DATE:	9/28/2020	PAGE:	65

9/28/2020
1:19:04 PM
I:\156402*Anderson*Mill*Road\CADD\SHEETS\RDV11*AM*07.dgn

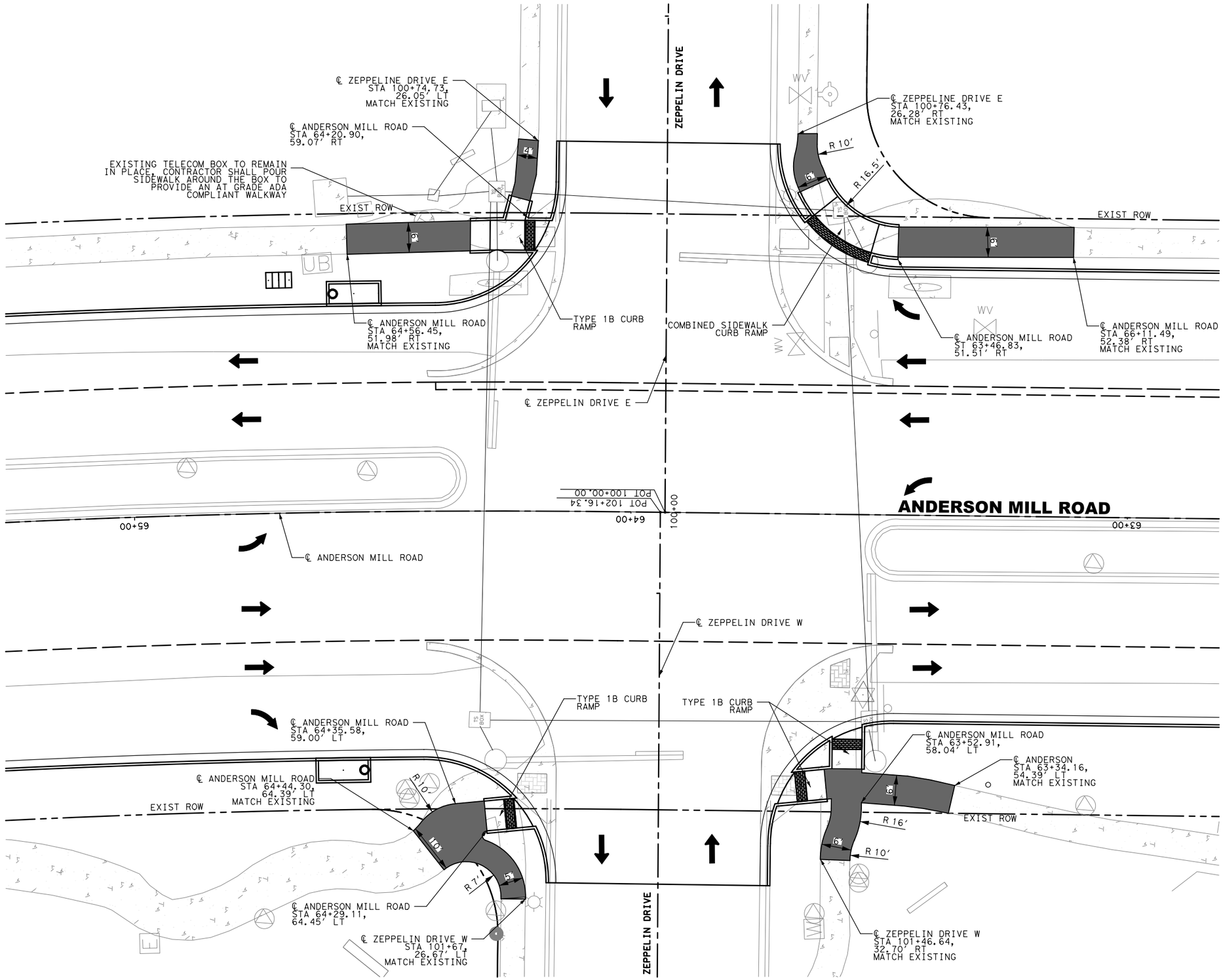

0' 5' 10' 20'
SCALE: 1"=20'

LEGEND

PROPOSED 4" SIDEWALK

NOTES:

1. THE CROSS SLOPE OF PEDESTRIAN CROSSINGS SHALL NOT EXCEED 2%.
2. SEE INTERSECTION LAYOUTS AND ROADWAY P&P SHEETS FOR ADDITIONAL INFORMATION.
3. REFER TO SIGNING AND STRIPING SHEETS FOR CROSSWALK STRIPING DETAILS.

NUMBER	DATE	REVISION	APPROVED

STATE OF TEXAS
GREGORY C. CALKINS
111309
LICENSED
PROFESSIONAL ENGINEER
6/30/2021

Binkley & Barfield, Inc
consulting engineers
Texas Registration Number F-257

CEDAR PARK

ANDERSON MILL ROAD

SIDEWALK AND PEDESTRIAN RAMP PLANS

ZEPPELIN DRIVE

DESIGN BY:	GCC	SCALE:	1" = 20'
DRAWN BY:	DSH		
CHECKED BY:	BMB	SHEET:	9 OF 9
APPROVED BY:	BDR		
PROJECT NO:	156402	PAGE:	66
DATE:	6/30/2021		

6/30/2021
1:23:54 PM
I:\156402*Anderson*Mill*Road\CADD\SHEETS\RDV11*AM*08.dgn

TRAFFIC SIGNAL NOTES:

ITEM 416 - DRILLED SHAFT FOUNDATIONS
Stake all Foundations, for approval, before beginning drilling operations.

Calculate the vertical signal head clearance before placing any signal pole foundation.

For mast-arm signal and strain pole anchor bolts, set two in tension and two in compression.

Obtain approval of placement prior to placing concrete.

Remove spoils from a flood plain at the end of each work day.

ITEM 618 - CONDUIT
Fit PVC and HDPE conduit terminations with bell ends.

Shift the locations of conduit and ground boxes to accommodate field conditions.

Install conduit not exceeding 2 feet in any direction from a straight line. Install conduit at a minimum depth of 2 ft. below finished grade. Installation of the conduit by jacking or boring method will be at a depth of at least 1 ft. below subgrade.

Install a high tension, non-metallic pull rope in all conduit runs. Cap all empty conduit using standard weather tight conduit caps. This work is subsidiary.

Use a coring device when drilling holes through concrete structures.

Structurally mounted junction boxes will be as shown on the plans. When used for traffic signal installations, these boxes will be 12" x 12" x 8". This work is subsidiary.

When using existing conduit, ensure that all conduits have bushings and cleaned of dirt, mud, grease, and other debris. Re-strap existing or relocated conduit per the specification. This work is subsidiary. Abandon existing underground conduit that is unusable is allowed if all conductors are removed. Replacement conduit will be paid using the existing bid items.

ITEM 620 - ELECTRICAL CONDUCTORS
Provide 10 amp time delay fuses.

For Flashing Beacons (Item 685) and Pedestal Poles (Item 687), provide single-pole breakaway disconnects.

Install a minimum size 8 AWG equipment grounding conductor (EGC) in all conduits including loop detectors and traffic signal cables. Payment and the size of the EGC will be in accordance with standard ED (3)-14 note 12.

Permanently mark "illumination" on the luminaire conductors installed inside a traffic signal pole. Make the marks easily visible from the hand hole.

ITEM 624 GROUND BOXES
Aggregate for fill under the box will be crushed, have a maximum size of 2 in., minimum size of 1/2 in., and requirements per Item 302 are waived.

ITEM 680 - HIGHWAY TRAFFIC SIGNALS
Luminaire arms shall be aligned with the signal head support. If multiple signal head supports, the luminaire arm shall be aligned with the support over the higher volume roadway.

Install 250W EQ LED illumination fixtures as shown in the plans. Test in accordance with Item 616. This work is subsidiary.

Furnish all materials and install signs mounted on the traffic signal wire, traffic signal poles, mast arms, and pedestal pole assemblies. Remove all conflicting signs and sign foundations when signal is placed into operation. This work is subsidiary.

Use a Vulcan swinger sign mounting bracket or equivalent for all signs mounted on span wires.

Place the traffic signal into operation after the traffic signal and stripe have been completed. The signal shop will be present to program the controller and assist with detection setup. Have a qualified technician and a representative from the controller supplier on the project site to place the traffic signals in operation.

If shown on the plans, install the Emergency Response Detection equipment supplied by the City.

Upon removal, contact signal shop to stockpile a maximum of 4 signal poles and mast arms that meet the current TxDOT standards at the Austin District Headquarters located at 7901 North IH 35, 78753. If signal shop declines receipt of material, Contractor will be responsible for disposal.

For city operated signals, the city may assist in determining how the detector loop lead-in cables are to be connected, and will also program the controller for operation, the video detection, hook up the conflict monitor, detector units and other equipment, and turn on the controller.

ITEM 682 VEHICLE AND PEDESTRIAN SIGNAL HEADS
Install signal head attachments so the wiring to each passes from the signal pole through the attachment hardware to the signal head. Use UV rated tie wraps.

Traffic signal heads will be aluminum unless otherwise shown on the plans. Back plates will be black aluminum.

Provide louvers, which have five vanes with a black finish on inside surfaces when required. Fasten a hardware cloth screen, securely, with 5/8" or smaller mesh size to the front face of each louver to prevent bird nesting.

Use the four point mounting system (TY A) for signal heads, except in cases of skewed or vertical heads when (TY B) will be used.

ITEM 684 TRAFFIC SIGNAL CABLES
For each cable run, coil an extra 2 ft. of cable in each steel pole and 5 ft. in the controller cabinet.

Provide a separate multi-conductor signal cable (14 AWG) inside pedestal poles and mast-arm signal poles from the terminal strip to each signal head as shown on the plans.

ITEM 686 - TRAFFIC SIGNAL POLE ASSEMBLIES (STEEL)
Provide and install damping plates on all mast arms 40 ft. or greater. For mast arms less than 40 ft., refer to SMA and DMA vibration notes for guidance. This work is subsidiary.

When luminaires are installed on mast arm poles, install a separate terminal strip in the signal pole access compartment. Provide a 10-amp time-delay fuse for traffic signal poles with luminaires.

ITEM 687 PEDESTAL POLE ASSEMBLIES
Verify the required pole height prior to ordering material.

ITEM 688 - PEDESTRIAN DETECTORS
Test period for the pedestrian detectors shall be in accordance with item 680.3.1.8.

Pedestrian push buttons will be mounted at 42 in. above the walking surface and have permanent type signs within the detector unit (9 in. x 12 in. sign and push button station on signal poles and 5 in. x 7 in. sign and push button station on pedestrian poles), which explains their purpose and indicates which crosswalk signal is actuated. Provide speech walk message as shown in the plans or per Engineer.

ITEM 6306 - VIDEO IMAGING VEHICLE DETECTION SYSTEM (VIVDS)
Install the VIVDS cameras onto the mast arms with the attachment mechanisms provided with the camera system. Install the VIVDS detection zones as directed. Have qualified personnel on site at the time of the signal turn-on to assist with the installation of detection zones. If the camera locations shown in the plans do not allow for proper sight of the proposed detection zones, relocate the cameras as needed and as directed. Place the traffic signal cable (TY A) (3-conductor) (16 AWG) in continuous and separate runs from each VIVDS camera to the controller. This work is subsidiary.

Aim and adjust the cameras, install the cables and VIVDS cards into the controller cabinet and complete any other necessary work to bring the traffic signal into operation.

Provide a Video Processor System (VPS) that can provide up to thirty-two detector outputs to the controller from up to eight camera/video processor units (C/VPU). Route the detector outputs through the Bus Interface Unit (BIU) or approved product, which replaces the functions of the BIU. Field of view for each C/VPU will provide a minimum of thirty-two virtual detection zones for vehicle detection.

Install all cables necessary to provide complete VIVDS operation. Provide a minimum of 10 cables to direct connect the notebook to the VIVDS port.

Phase red and green load switch outputs from up to sixteen phases of a NEMA TS2 Type 2 controller will be provided as inputs to the VPU for use with internal detector extend/delay timing functions. The C/VPU will be able to condition the detector outputs and detection zones based on the state of the associated phase number and color.

The serial communication port on the front of the VPU will be a DB-9 RS-232 connector. Supply a package that will operate with Windows XP and NT and provide the functionality defined in both sections 7.0 and 8.0 in both a direct connect and remote communications mode. The software resident in the VPU and the personal computer will be capable of transmitting and receiving all information needed for zone set up, monitoring vehicle detection by viewing flashing detection zone overlays, and uploading/downloading and interrogating all stored data within the VPU. Remote communications with the VCU will be possible with the addition of external communication devices (modem, Codec, etc.) using the RS-232 and video output ports on the front of the VPU.

The VPU operational software will be stored internally in flash memory and be capable of being updated without the removal and replacement of memory devices.

All surge protection will be din rail mounted.

NUMBER	DATE	REVISION	APPROVED

STATE OF TEXAS
BRADFORD K. BRIMLEY
125348
LICENSED
PROFESSIONAL ENGINEER

Bradford Brimley
9-28-2020

Binkley & Barfield, Inc
consulting engineers
Texas Registration Number F-257

CEDAR PARK

ANDERSON MILL ROAD

TRAFFIC SIGNAL NOTES

DESIGN BY:	GCC	SCALE:	NTS
DRAWN BY:	DSH		
CHECKED BY:	BMB		
APPROVED BY:	BDR	SHEET:	1 OF 1
PROJECT NO:	156402		
DATE:	9/28/2020	PAGE:	67

9/28/2020
1:19:12 PM
T:\156402*Anderson*Mill*Road\CADD\SHEETS\SGDT1*Signal Notes*01.dgn

0' 7.5' 15' 30'
SCALE: 1"=30'

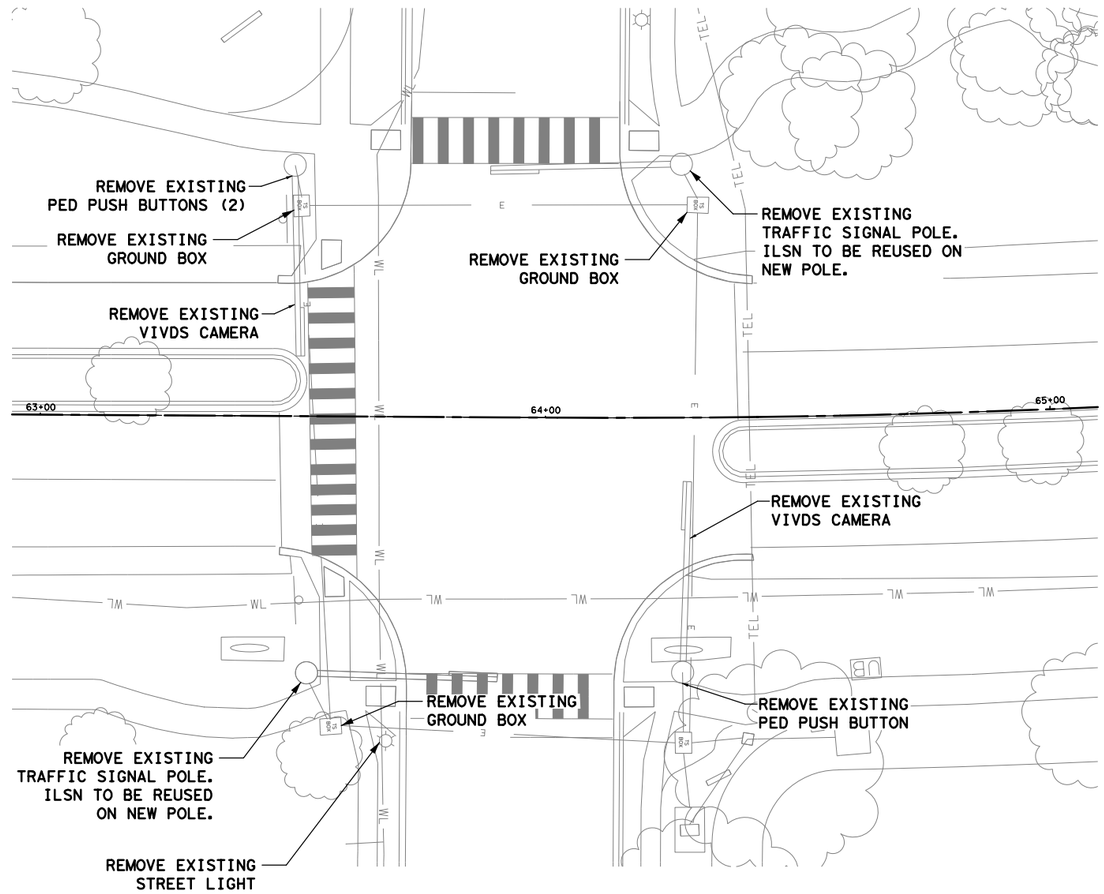

NOTES:

1. LOCATIONS OF EXISTING STRUCTURES AND PAVEMENT TO BE REMOVED OR REPLACED ARE APPROXIMATE AND ARE SHOWN FOR REFERENCE.

2. LOCATIONS OF EXISTING UTILITIES ARE APPROXIMATE AS SHOWN. THE CONTRACTOR IS RESPONSIBLE FOR VERIFYING AND POT HOLING THE LOCATIONS OF ALL UNDERGROUND UTILITIES AND STRUCTURES PRIOR TO STARTING CONSTRUCTION AND FOR PROTECTING THEM FROM DAMAGE DURING CONSTRUCTION.

3. EXISTING SIGNAL SHALL BE OPERATIONAL UNTIL PROPOSED MODIFICATIONS ARE IN PLACE AND OPERATIONAL.

4. SALVAGE POLES, MAST ARMS, VIVIDS CAMERAS, AND SIGNAL HEADS AND DELIVER TO THE CITY. THE EXISTING ILSN STREET NAME SIGNS ARE TO BE REUSED ON THE NEW POLES.

5. EXISTING FOUNDATIONS OF REMOVED POLES ARE TO BE REMOVED AT LEAST 24" BELOW GRADE AND FINISHED TO MATCH ADJACENT SURFACE.

NUMBER	DATE	REVISION	APPROVED

STATE OF TEXAS
BRADFORD K. BRIMLEY
125348
LICENSED
PROFESSIONAL ENGINEER
9-28-2020

Binkley & Barfield, Inc
consulting engineers
Texas Registration Number F-257

CEDAR PARK

ANDERSON MILL ROAD

ANDERSON MILL RD AT ZEPPELIN DR EXISTING SIGNAL/REMOVALS

DESIGN BY:	BKB	SCALE:	1" = 30'
DRAWN BY:	BKB		
CHECKED BY:	DSS		
APPROVED BY:		SHEET:	1 OF 1
PROJECT NO:	156402		
DATE:	9/28/2020	PAGE: 68	

9/28/2020
1:19:17 PM
T:\156402*Anderson*Mill*Road\CADD\SHEETS\SGDM1*REMOVALS*01.dgn

PROPOSED SIGNAL FACES

H4 — 1, 3
12" ONE-WAY HORIZONTAL 4-SECTION R-Y-⊗-G SIGNAL HEAD

H5R — 2, 4
12" ONE-WAY HORIZONTAL 5-SECTION R-Y-G-⊗-G SIGNAL HEAD

V4 — 11, 12
12" ONE-WAY HORIZONTAL 4-SECTION R-⊗-⊗-G SIGNAL HEAD

PEDESTRIAN SIGNALS/BUTTONS

W2, W3, W6
16"x16" LED, WITH 9" FULL SYMBOL HAND/MAN, SINGLE SECTION, PEDESTRIAN SIGNAL, WITH COUNTDOWN

P2 — START CROSSING / Walk for Pedestrians / DON'T WALK / Walk Crossing If Started / TIME REMAINING (In Flash Crosswalk) / DON'T CROSS / TO CROSS PUSH BUTTON

P1, P3, P4, P5, P6 — START CROSSING / Walk for Pedestrians / DON'T WALK / Walk Crossing If Started / TIME REMAINING (In Flash Crosswalk) / DON'T CROSS / TO CROSS PUSH BUTTON

9"x15" R10-3e COUNTDOWN SIGNS WITH PEDESTRIAN SIGNAL BUTTONS (APS)

PROPOSED SIGNS

S1 — R9-3 (24x24)

S2, S3 — RIGHT TURN SIGNAL — R10-10R (30x36) — UNDER HEADS 11, 12

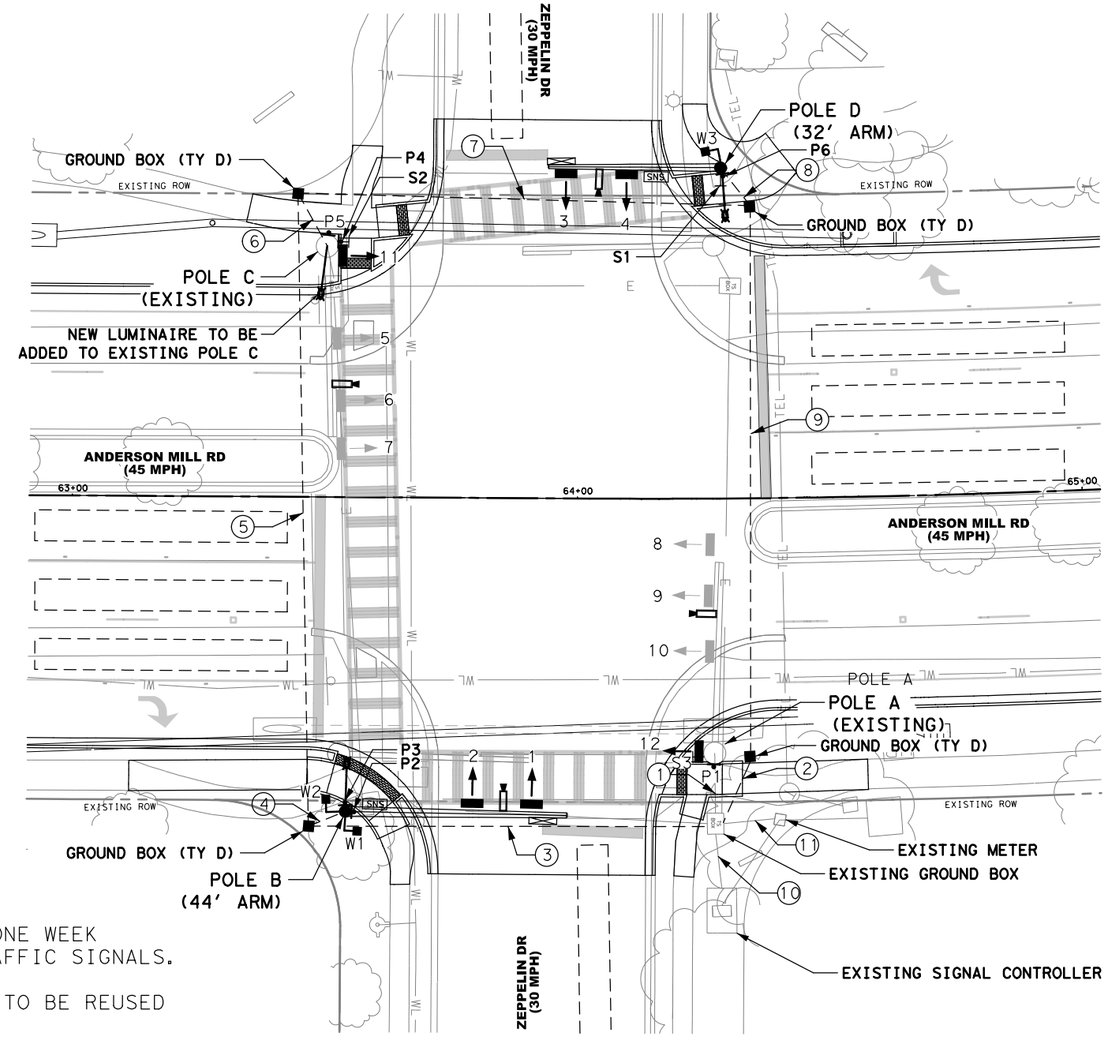

LEGEND:

- TRAFFIC SIGNAL HEAD
- TRAFFIC SIGNAL POLE
- GROUND BOX
- PROPOSED CONDUIT
- VIVDS CAMERA
- LUMINAIRE
- MAST ARM
- PED. BUTTON (P)
- PED. SIGNAL HEAD (W)
- STREET NAME SIGN
- TRAFFIC SIGN
- WIND DAMPER
- DETECTION ZONE
- WL — EXISTING WATERLINE
- E — EXISTING UNDERGROUND ELECTRIC LINE
- TEL — EXISTING TELEPHONE LINE

0' 7.5' 15' 30'
SCALE: 1"=30'

NOTES:

1. NOTIFY CITY SIGNAL MAINTENANCE OFFICE ONE WEEK BEFORE BEGINNING ANY WORK INVOLVING TRAFFIC SIGNALS.
2. EXISTING ILLUMINATED STREET NAME SIGNS TO BE REUSED ON NEW POLES.
3. MAST ARM DAMPER SHALL BE VALMONT MITIGATOR OR EQUIVALENT DAMPING DEVICE.
4. CONTRACTOR SHALL FURNISH AND INSTALL NEW APS SYSTEM. APS SYSTEM SHALL BE POLARA iNAVIGATOR iNS SYSTEM OR EQUIVALENT. NEW BUTTONS TO BE PROVIDED ON ALL POLES. EXISTING PED SIGNAL HEADS TO REMAIN ON POLES A AND C.
5. CITY WILL PROVIDE NEW VIVDS CAMERAS FOR EACH POLE. CONTRACTOR TO INSTALL NEW CAT 5E CABLE.
6. NEW CONDUCTORS FOR ALL SIGNAL COMPONENTS TO BE PROVIDED TO POLE C (SEE WIRING SCHEDULE).

UTILITY DISCLAIMER

THE CONTRACTOR SHALL LOCATE ALL UTILITIES PRIOR TO COMMENCING WORK. THE CONTRACTOR SHALL CONTACT PUBLIC AND PRIVATE UTILITIES FOR LOCATION OF UNDERGROUND FACILITIES PRIOR TO ANY DRILLING, BORING, TRENCHING, OR EXCAVATING. THE CONTRACTOR SHALL BE FULLY RESPONSIBLE FOR ANY DAMAGE CAUSED BY CONTRACTOR'S FAILURE TO LOCATE AND PRESERVE THESE UTILITIES, WHETHER UNDERGROUND, ABOVE GROUND, OR OVERHEAD.

NUMBER	DATE	REVISION	APPROVED

STATE OF TEXAS — BRADFORD K. BRIMLEY — 125348 — LICENSED PROFESSIONAL ENGINEER
9-28-2020

Binkley & Barfield, Inc
consulting engineers
Texas Registration Number F-257

CEDAR PARK

ANDERSON MILL ROAD

PROPOSED SIGNAL LAYOUT ANDERSON MILL RD AT ZEPPELIN DR

DESIGN BY:	BKB	SCALE:	1" = 30'
DRAWN BY:	BKB		
CHECKED BY:	DSS		
APPROVED BY:		SHEET:	1 OF 1
PROJECT NO:	156402		
DATE:	9/28/2020	PAGE:	69

9/28/2020
1:19:21 PM
T:\156402*AndersonMill*Road\CADD\SHEETS\SGLY1*PROP*SIGNAL*01.dgn

CONDUIT/CABLE RUNS													
RUN	CONDUIT				CABLES							LENGTH (FT)	RUN
	3" PVC TRENCH	2" PVC TRENCH (LUM)	3" PVC BORED	2" PVC BORED (LUM)	NO.8 BARE WIRE	NO. 8 XHHW (LUMINAIRE)	3/C 12 AWG TRAY CABLE (ILSN)	VIVDS CABLE (CAT 5E ETHERNET)	2/C 14 AWG (PUSH BUTTON)	5/C 14 AWG (SIGNAL)	7/C 14 AWG (SIGNAL)		
1*								1			1	15	1*
2	2	1			3	2	1	1	1	2	1	15	2
3			2	1	3	4	2	2	4	6	3	80	3
4	2	1			3	2	1	1	2	3	1	10	4
5			2	1	3	2	1	1	2	3	2	125	5
6	2	1			3	2	1	1	2	3	2	15	6
7			2	1	3							90	7
8	2	1			3	2	1	1	1	2	1	10	8
9			2	1	3	2	1	1	1	2	1	110	9
10*								4	5	8	5	15	10*
11*						6	3					15	11*
TOTAL	100	50	810	405	1365	980	490	520	830	1320	755		

NOTES: *Existing
CONDUIT 7 TO BE INSTALLED AS SPARE

CABLE/WIRE INSIDE POLE (FT)						
POLE	2/C 14 AWG (PUSH BUTTON)	5/C 14 AWG (SIGNAL)	7/C 14 AWG (SIGNAL)	NO. 8 XHHW (LUMINAIRE)	3/C 12 AWG TRAY CABLE (ILSN)	VIVDS CABLE (CAT 5E ETHERNET)
POLE A (EXIST)	-	-	20	-	-	48
POLE B (STEEL POLE W 44' MA, LUM)	10	68	56	70	30	50
POLE C (EXIST)	10	90	62	70	30	48
POLE D (STEEL POLE W 32' MA, LUM)	5	48	50	70	30	42
TOTAL	25	206	188	210	90	188

CABLE/WIRE INSIDE CABINET (FT)			
2/C 14 AWG (PUSH BUTTON)	5/C 14 AWG (SIGNAL)	7/C 14 AWG (SIGNAL)	VIVDS CABLE (CAT 5E)
30	40	25	20

GROUND BOXES	
TYPE	EACH
TY D W/ APRON	4

MAST ARM ASSEMBLY SUMMARY					
POLE	MAST ARM LENGTH (FT)	NO. OF PROPOSED HEADS	8' LUM. ARM	FND. TYPE	FND. DEPTH (FT)
POLE A	-	1 (ON POLE)	-	-	-
POLE B	44'	2	Y	36-A	13
POLE C	-	1 (ON POLE)	Y	-	-
POLE D	32'	2	Y	30-A	11

SIGNAL HEADS WITH LED LAMPS					
SIGNAL HEAD DESIGNATION	SIGNAL HEAD TYPE	12" SIGNAL INDICATION BACKPLATES		VEH SIGNAL SEC (EA)	PED SIGNAL SEC (EA)
		4 SEC (EA)	5 SEC (EA)		
1,3	H4	2		8	
2,4	H5R		2	10	
11,12	V4	2		8	
W2, W3, W6	PED				3
TOTAL		4	2	26	3

APS MESSAGE CHART		
POLE LOCATION	FUNCTIONS	SPEECH MESSAGE/SOUND DETAILS
POLE A PUSH BUTTON P1	BUTTON PUSH ON DW	WAIT
	EXTENDED BUTTON PUSH	WAIT TO CROSS ZEPPELIN DR AT ANDERSON MILL RD
	LOCATOR TONE	SLOW TICK
	WALK INDICATION	ZEPPELIN DR, WALK SIGN IS ON TO CROSS ZEPPELIN DR
POLE B PUSH BUTTON P2	BUTTON PUSH ON DW	WAIT
	EXTENDED BUTTON PUSH	WAIT TO CROSS ANDERSON MILL RD AT ZEPPELIN DR
	LOCATOR TONE	SLOW TICK
	WALK INDICATION	ANDERSON MILL RD, WALK SIGN IS ON TO CROSS ANDERSON MILL RD
POLE B PUSH BUTTON P3	BUTTON PUSH ON DW	WAIT
	EXTENDED BUTTON PUSH	WAIT TO CROSS ZEPPELIN DR AT ANDERSON MILL RD
	LOCATOR TONE	SLOW TICK
	WALK INDICATION	ZEPPELIN DR, WALK SIGN IS ON TO CROSS ZEPPELIN DR
POLE C PUSH BUTTON P4	BUTTON PUSH ON DW	WAIT
	EXTENDED BUTTON PUSH	WAIT TO CROSS ANDERSON MILL RD AT ZEPPELIN DR
	LOCATOR TONE	SLOW TICK
	WALK INDICATION	ANDERSON MILL RD, WALK SIGN IS ON TO CROSS ANDERSON MILL RD
POLE C PUSH BUTTON P5	BUTTON PUSH ON DW	WAIT
	EXTENDED BUTTON PUSH	WAIT TO CROSS ZEPPELIN DR AT ANDERSON MILL RD
	LOCATOR TONE	SLOW TICK
	WALK INDICATION	ZEPPELIN DR, WALK SIGN IS ON TO CROSS ZEPPELIN DR
POLE D PUSH BUTTON P6	BUTTON PUSH ON DW	WAIT
	EXTENDED BUTTON PUSH	WAIT TO CROSS ZEPPELIN DR AT ANDERSON MILL RD
	LOCATOR TONE	SLOW TICK
	WALK INDICATION	ZEPPELIN DR, WALK SIGN IS ON TO CROSS ZEPPELIN DR

NUMBER	DATE	REVISION	APPROVED

STATE OF TEXAS
BRADFORD K. BRIMLEY
125348
LICENSED
PROFESSIONAL ENGINEER
9-28-2020

Binkley & Barfield, Inc
consulting engineers
Texas Registration Number F-257

CEDAR PARK

ANDERSON MILL ROAD

TRAFFIC SIGNAL SCHEDULE OF MATERIALS

DESIGN BY: BKB
DRAWN BY: BKB
CHECKED BY: DSS
APPROVED BY:
PROJECT NO: 156402
DATE: 9/28/2020

SCALE: NTS
SHEET: 1 OF 1
PAGE: 70

9/28/2020
1:19:24 PM
T:\156402*AndersonMill*Road\CADD\SHEETS\SGLY1*Traffic*Schedule*Materials*01.dgn

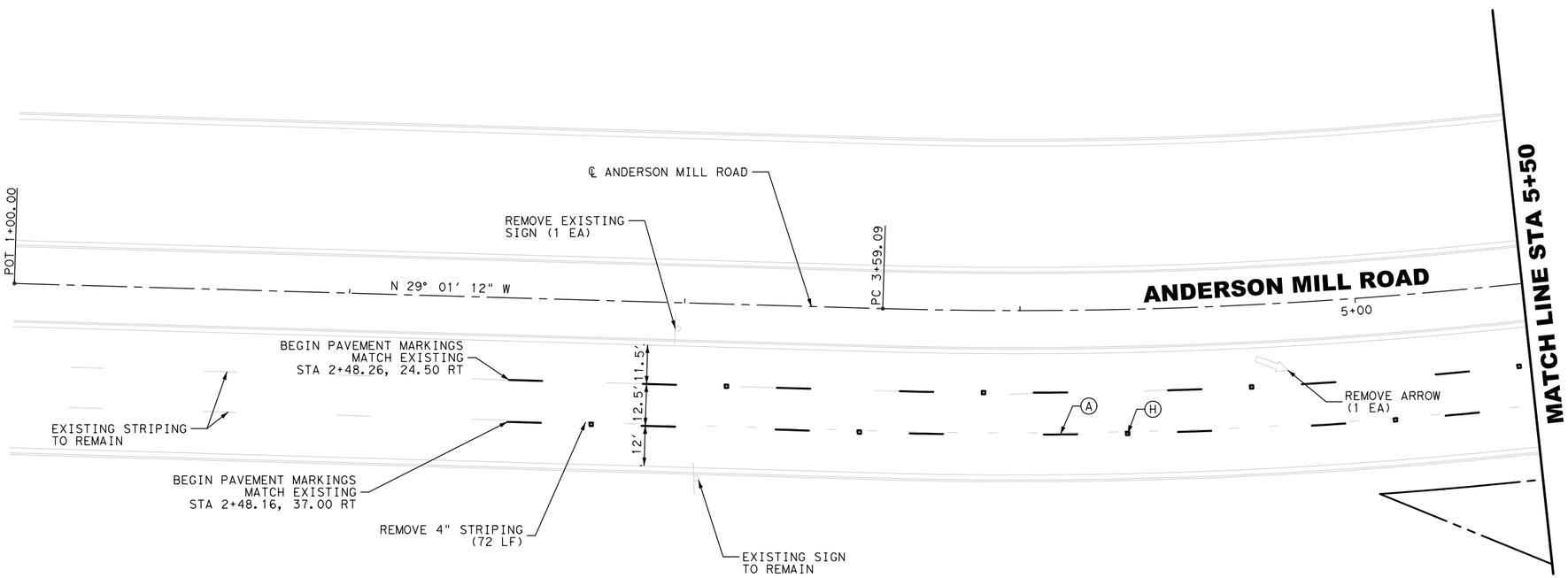

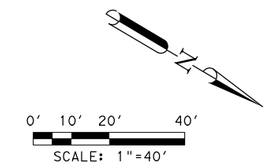

PAVEMENT MARKING LEGEND

- (A) PAV MRK TY I (W)(4")(BRK)
- (B) PAV MRK TY I (W)(4")(SLD)
- (C) PAV MRK TY I (W)(8")(SLD)
- (D) PAV MRK TY I (W)(12")(SLD)
- (E) PAV MRK TY I (W)(24")(SLD)
- (F) PAV MRK TY I (W)(ARROW)
- (G) PAV MRK TY I (W)(WORD)
- (H) REFL PAV MRKR TY II-C-R
- (I) REFL PAV MRKR TY II-A-A
- (J) REFL PAV MRKR TY I-C

NUMBER	DATE	REVISION	APPROVED

STATE OF TEXAS
GREGORY C. CALKINS
111309
LICENSED
PROFESSIONAL ENGINEER
9/28/2020

Binkley & Barfield, Inc
consulting engineers
Texas Registration Number F-257

CEDAR PARK

ANDERSON MILL ROAD
SIGNING AND STRIPING PLANS
BEGIN PROJECT TO STA 5+50

LEGEND

- PROPOSED SIGN
- EXISTING SIGN
- SPEED LIMIT XX — NEW SIGN
- SPEED LIMIT XX — RELOCATED EXISTING SIGN

NOTES:

1. ALL PAVEMENT MARKINGS SHALL BE FURNISHED AND INSTALLED IN ACCORDANCE WITH THE LATEST VERSIONS OF THE CITY'S CONSTRUCTION STANDARDS AND THE TMUTCD.
2. ALL EXISTING SIGNS SHALL BE RELOCATED AS SHOWN IN THE PLANS UNLESS NOTED OTHERWISE.
3. ALL STREET NAME PLAQUES LOCATED ON EXISTING STOP SIGNS SHALL BE RELOCATED WITH STOP SIGN.
4. ALL SIGNS TO BE FABRICATED AND INSTALLED IN ACCORDANCE TO THE LATEST VERSIONS OF THE TMUTCD.
5. LANE WIDTH DIMENSIONS ARE TO LIP OF GUTTER.

DESIGN BY:	GCC	SCALE:	1"=40′
DRAWN BY:	DSH		
CHECKED BY:	BMB	SHEET:	1 OF 17
APPROVED BY:	BDR		
PROJECT NO:	156402	PAGE:	71
DATE:	9/28/2020		

9/28/2020
1:19:30 PM
T:\156402*Anderson*Mill*Road\CADD\SHEETS\PMLY1*AM*01A.dgn

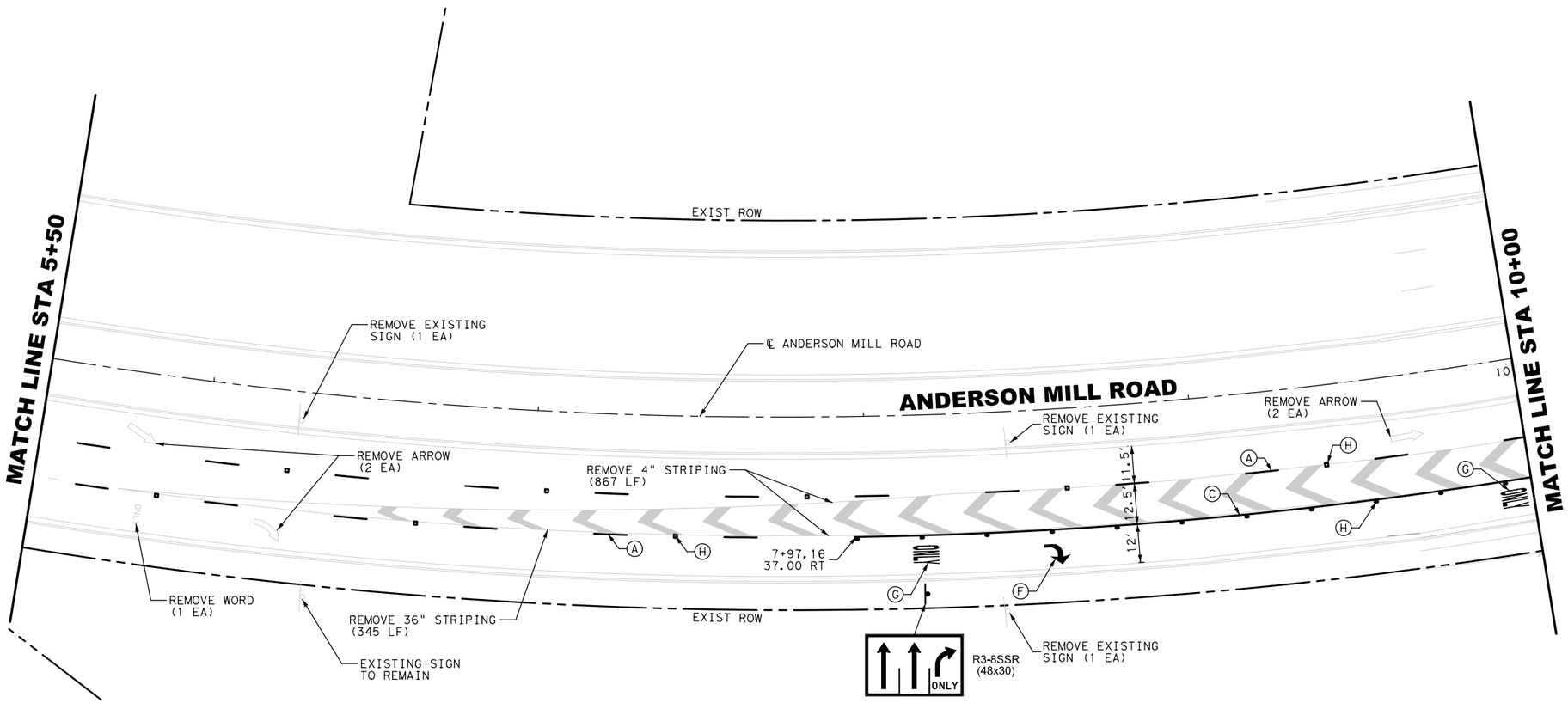

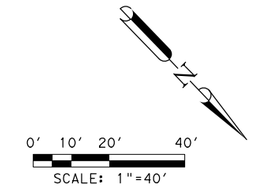

PAVEMENT MARKING LEGEND

- (A) PAV MRK TY I (W)(4")(BRK)
- (B) PAV MRK TY I (W)(4")(SLD)
- (C) PAV MRK TY I (W)(8")(SLD)
- (D) PAV MRK TY I (W)(12")(SLD)
- (E) PAV MRK TY I (W)(24")(SLD)
- (F) PAV MRK TY I (W)(ARROW)
- (G) PAV MRK TY I (W)(WORD)
- (H) REFL PAV MRKR TY II-C-R
- (I) REFL PAV MRKR TY II-A-A
- (J) REFL PAV MRKR TY I-C

NUMBER	DATE	REVISION	APPROVED

STATE OF TEXAS
GREGORY C. CALKINS
111309
LICENSED
PROFESSIONAL ENGINEER
9/28/2020

Binkley & Barfield, Inc
consulting engineers
Texas Registration Number F-257

CEDAR PARK

ANDERSON MILL ROAD
SIGNING AND STRIPING PLANS
STA 5+50 - STA 10+00

LEGEND

- PROPOSED SIGN
- EXISTING SIGN
- SPEED LIMIT XX — NEW SIGN
- SPEED LIMIT XX — RELOCATED EXISTING SIGN

NOTES:

1. ALL PAVEMENT MARKINGS SHALL BE FURNISHED AND INSTALLED IN ACCORDANCE WITH THE LATEST VERSIONS OF THE CITY'S CONSTRUCTION STANDARDS AND THE TMUTCD.
2. ALL EXISTING SIGNS SHALL BE RELOCATED AS SHOWN IN THE PLANS UNLESS NOTED OTHERWISE.
3. ALL STREET NAME PLAQUES LOCATED ON EXISTING STOP SIGNS SHALL BE RELOCATED WITH STOP SIGN.
4. ALL SIGNS TO BE FABRICATED AND INSTALLED IN ACCORDANCE TO THE LATEST VERSIONS OF THE TMUTCD.
5. LANE WIDTH DIMENSIONS ARE TO LIP OF GUTTER.

DESIGN BY:	GCC
DRAWN BY:	DSH
CHECKED BY:	BMB
APPROVED BY:	BDR
PROJECT NO:	156402
DATE:	9/28/2020

SCALE: 1"=40'

SHEET: 2 OF 17

PAGE: 72

9/28/2020
1:19:33 PM
T:\156402*Anderson*Mill*Road\CADD\SHEETS\PMLY1*AM*01B.dgn

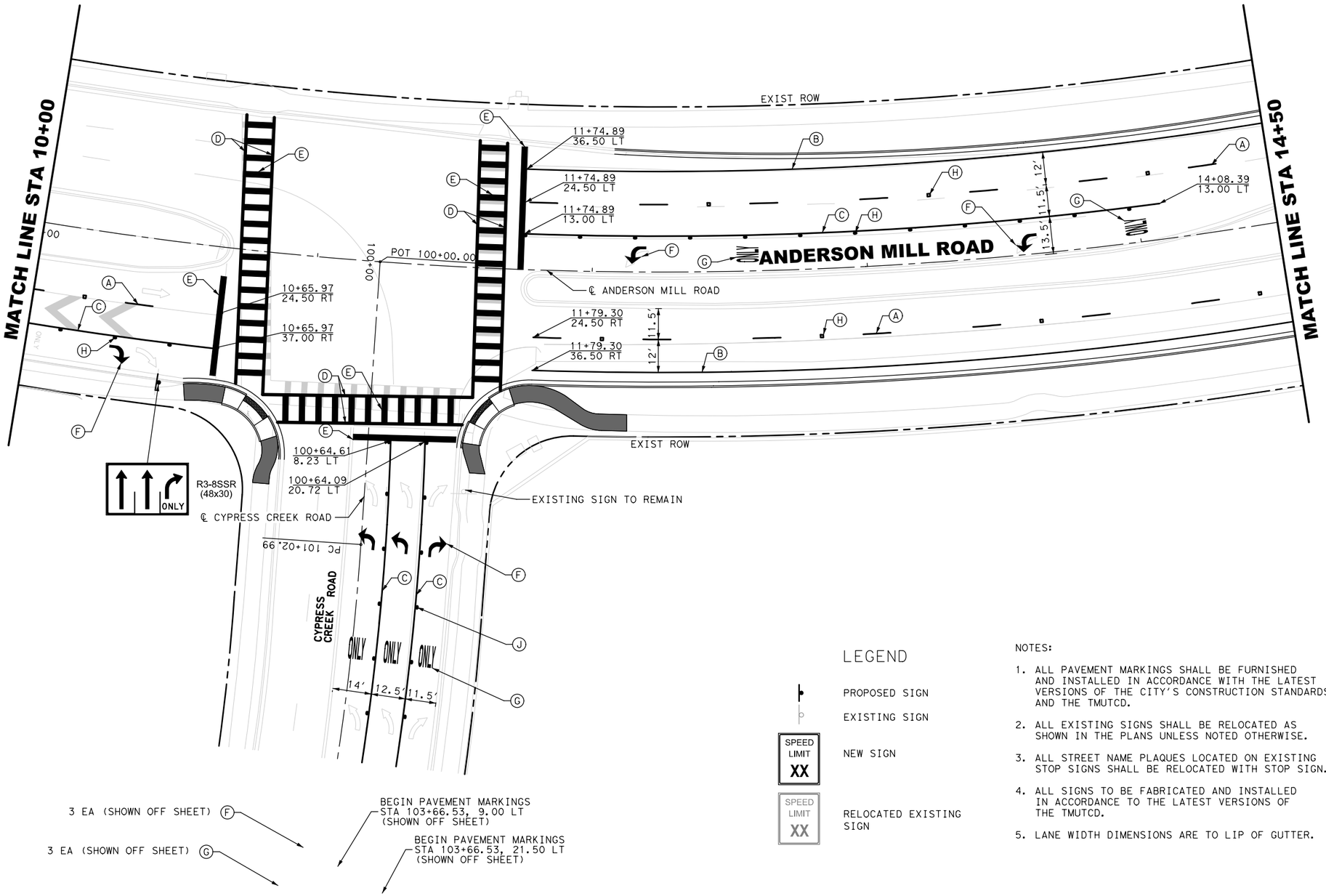

0' 10' 20' 40'
SCALE: 1"=40'

PAVEMENT MARKING LEGEND

- (A) PAV MRK TY I (W)(4")(BRK)
- (B) PAV MRK TY I (W)(4")(SLD)
- (C) PAV MRK TY I (W)(8")(SLD)
- (D) PAV MRK TY I (W)(12")(SLD)
- (E) PAV MRK TY I (W)(24")(SLD)
- (F) PAV MRK TY I (W)(ARROW)
- (G) PAV MRK TY I (W)(WORD)
- (H) REFL PAV MRKR TY II-C-R
- (I) REFL PAV MRKR TY II-A-A
- (J) REFL PAV MRKR TY I-C

LEGEND

- PROPOSED SIGN
- EXISTING SIGN
- SPEED LIMIT XX — NEW SIGN
- SPEED LIMIT XX — RELOCATED EXISTING SIGN

NOTES:

1. ALL PAVEMENT MARKINGS SHALL BE FURNISHED AND INSTALLED IN ACCORDANCE WITH THE LATEST VERSIONS OF THE CITY'S CONSTRUCTION STANDARDS AND THE TMUTCD.
2. ALL EXISTING SIGNS SHALL BE RELOCATED AS SHOWN IN THE PLANS UNLESS NOTED OTHERWISE.
3. ALL STREET NAME PLAQUES LOCATED ON EXISTING STOP SIGNS SHALL BE RELOCATED WITH STOP SIGN.
4. ALL SIGNS TO BE FABRICATED AND INSTALLED IN ACCORDANCE TO THE LATEST VERSIONS OF THE TMUTCD.
5. LANE WIDTH DIMENSIONS ARE TO LIP OF GUTTER.

NUMBER	DATE	REVISION	APPROVED

STATE OF TEXAS
GREGORY C. CALKINS
111309
LICENSED
PROFESSIONAL ENGINEER
9/28/2020

Binkley & Barfield, Inc
consulting engineers
Texas Registration Number F-257

CEDAR PARK

ANDERSON MILL ROAD
SIGNING AND STRIPING PLANS
STA 10+00 - STA 14+50

DESIGN BY:	GCC	SCALE:	1"=40'
DRAWN BY:	DSH		
CHECKED BY:	BMB		
APPROVED BY:	BDR	SHEET:	3 OF 17
PROJECT NO:	156402		
DATE:	9/28/2020	PAGE:	73

9/28/2020
1:19:34 PM
I:\156402*Anderson*Mill*Road\CADD\SHEETS\PMLY1*AM*01.dgn

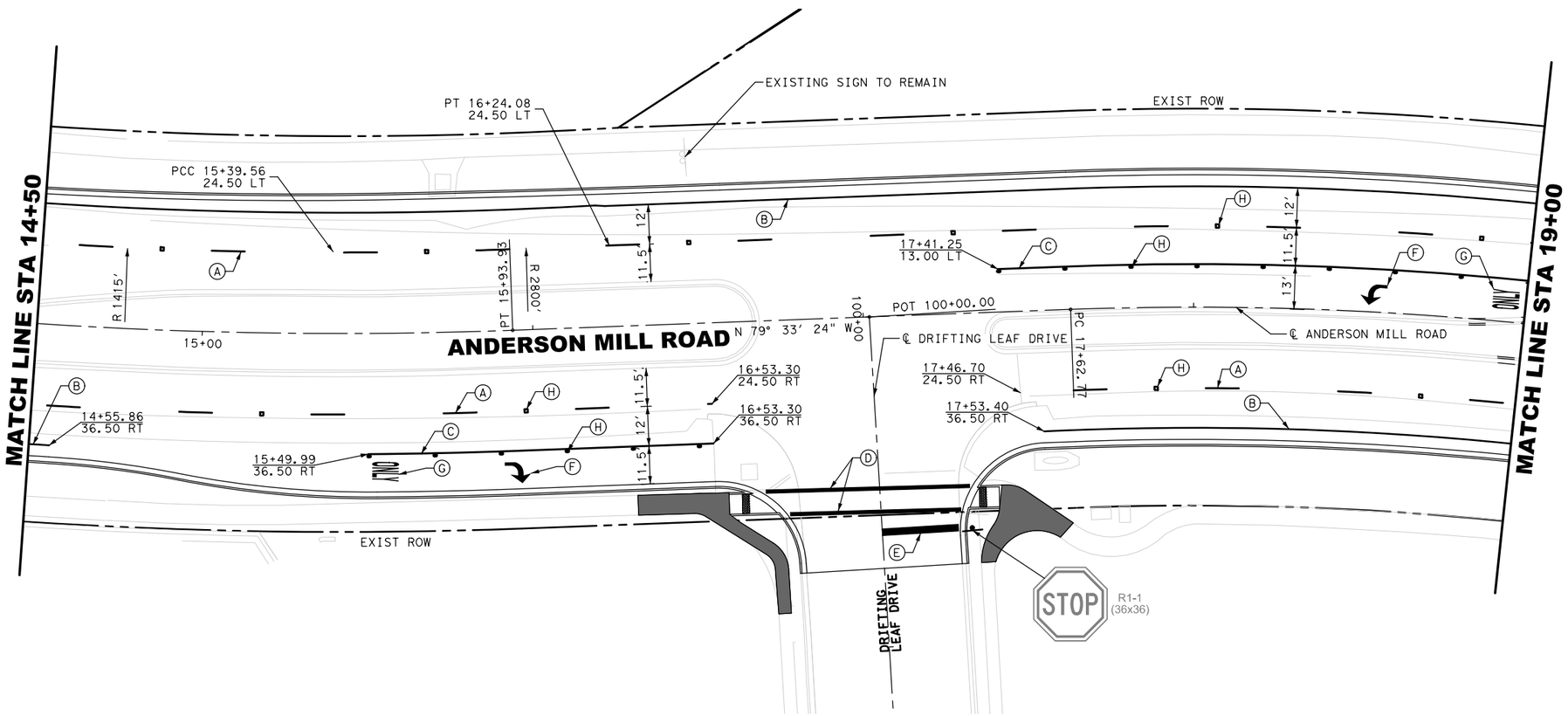

0' 10' 20' 40'
SCALE: 1"=40'

PAVEMENT MARKING LEGEND

- (A) PAV MRK TY I (W)(4")(BRK)
- (B) PAV MRK TY I (W)(4")(SLD)
- (C) PAV MRK TY I (W)(8")(SLD)
- (D) PAV MRK TY I (W)(12")(SLD)
- (E) PAV MRK TY I (W)(24")(SLD)
- (F) PAV MRK TY I (W)(ARROW)
- (G) PAV MRK TY I (W)(WORD)
- (H) REFL PAV MRKR TY II-C-R
- (I) REFL PAV MRKR TY II-A-A
- (J) REFL PAV MRKR TY I-C
- (K) PAV MRK TY I (Y)(4")(SLD)

NUMBER	DATE	REVISION	APPROVED

STATE OF TEXAS
GREGORY C. CALKINS
111309
LICENSED
PROFESSIONAL ENGINEER
6/30/2021

Binkley & Barfield, Inc
consulting engineers
Texas Registration Number F-257

CEDAR PARK

ANDERSON MILL ROAD
SIGNING AND STRIPING PLANS
STA 14+50 - STA 19+00

LEGEND

- PROPOSED SIGN
- EXISTING SIGN
- SPEED LIMIT XX — NEW SIGN
- SPEED LIMIT XX — RELOCATED EXISTING SIGN

NOTES:

1. ALL PAVEMENT MARKINGS SHALL BE FURNISHED AND INSTALLED IN ACCORDANCE WITH THE LATEST VERSIONS OF THE CITY'S CONSTRUCTION STANDARDS AND THE TMUTCD.
2. ALL EXISTING SIGNS SHALL BE RELOCATED AS SHOWN IN THE PLANS UNLESS NOTED OTHERWISE.
3. ALL STREET NAME PLAQUES LOCATED ON EXISTING STOP SIGNS SHALL BE RELOCATED WITH STOP SIGN.
4. ALL SIGNS TO BE FABRICATED AND INSTALLED IN ACCORDANCE TO THE LATEST VERSIONS OF THE TMUTCD.
5. LANE WIDTH DIMENSIONS ARE TO LIP OF GUTTER.

DESIGN BY:	GCC	SCALE:	1"=40'
DRAWN BY:	DSH		
CHECKED BY:	BMB	SHEET:	4 OF 17
APPROVED BY:	BDR		
PROJECT NO:	156402	PAGE:	74
DATE:	6/30/2021		

6/30/2021
3:39:39 PM
T:\156402*Anderson*Mill*Road\CADD\SHEETS\PMLY1*AM*02.dgn

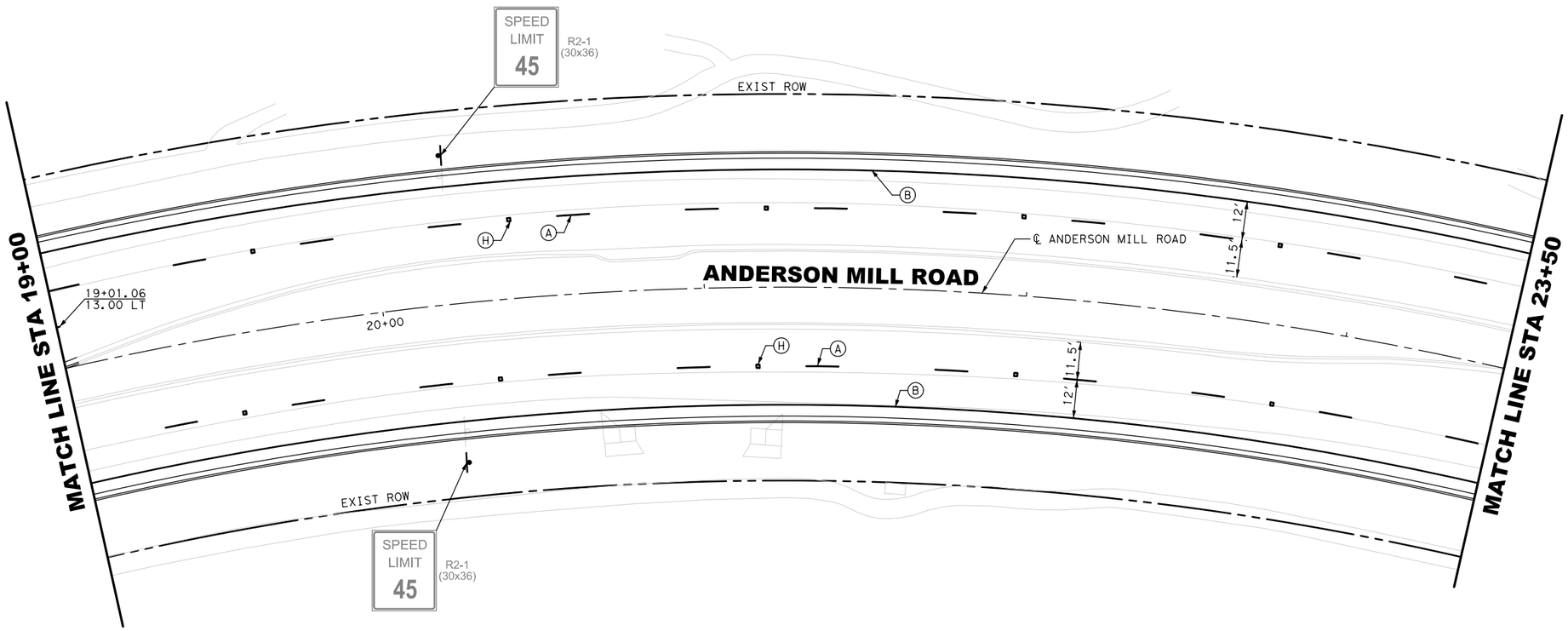

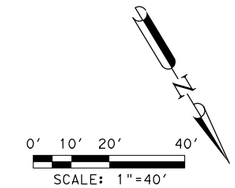

PAVEMENT MARKING LEGEND

- (A) PAV MRK TY I (W)(4")(BRK)
- (B) PAV MRK TY I (W)(4")(SLD)
- (C) PAV MRK TY I (W)(8")(SLD)
- (D) PAV MRK TY I (W)(12")(SLD)
- (E) PAV MRK TY I (W)(24")(SLD)
- (F) PAV MRK TY I (W)(ARROW)
- (G) PAV MRK TY I (W)(WORD)
- (H) REFL PAV MRKR TY II-C-R
- (I) REFL PAV MRKR TY II-A-A
- (J) REFL PAV MRKR TY I-C

NUMBER	DATE	REVISION	APPROVED

STATE OF TEXAS
GREGORY C. CALKINS
111309
LICENSED
PROFESSIONAL ENGINEER
9/28/2020

Binkley & Barfield, Inc
consulting engineers
Texas Registration Number F-257

CEDAR PARK

ANDERSON MILL ROAD
SIGNING AND STRIPING PLANS
STA 19+00 - STA 23+50

LEGEND

- PROPOSED SIGN
- EXISTING SIGN
- SPEED LIMIT XX — NEW SIGN
- SPEED LIMIT XX — RELOCATED EXISTING SIGN

NOTES:

1. ALL PAVEMENT MARKINGS SHALL BE FURNISHED AND INSTALLED IN ACCORDANCE WITH THE LATEST VERSIONS OF THE CITY'S CONSTRUCTION STANDARDS AND THE TMUTCD.
2. ALL EXISTING SIGNS SHALL BE RELOCATED AS SHOWN IN THE PLANS UNLESS NOTED OTHERWISE.
3. ALL STREET NAME PLAQUES LOCATED ON EXISTING STOP SIGNS SHALL BE RELOCATED WITH STOP SIGN.
4. ALL SIGNS TO BE FABRICATED AND INSTALLED IN ACCORDANCE TO THE LATEST VERSIONS OF THE TMUTCD.
5. LANE WIDTH DIMENSIONS ARE TO LIP OF GUTTER.

DESIGN BY:	GCC	SCALE:	1"=40'
DRAWN BY:	DSH		
CHECKED BY:	BMB		
APPROVED BY:	BDR	SHEET:	5 OF 17
PROJECT NO:	156402		
DATE:	9/28/2020	PAGE:	75

9/28/2020
1:19:42 PM
T:\156402*Anderson*Mill*Road\CADD\SHEETS\PMLY1*AM*03.dgn

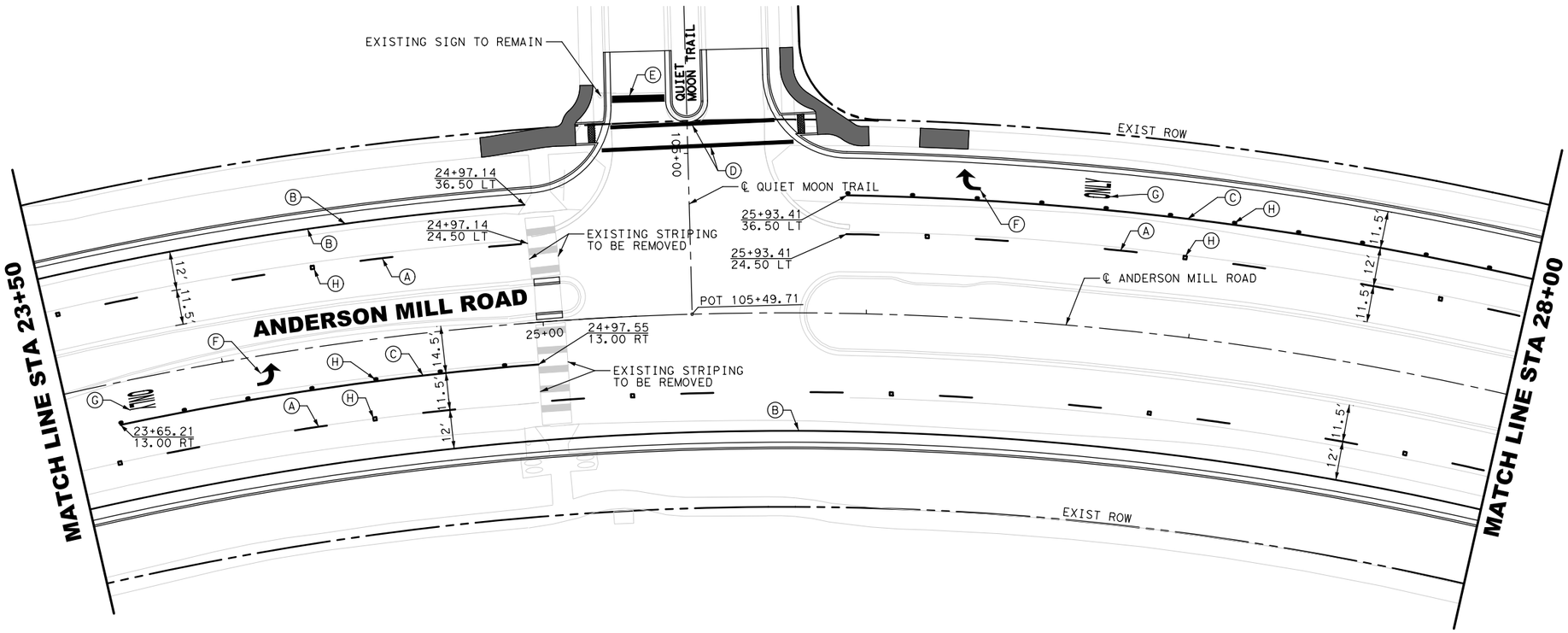

0′ 10′ 20′ 40′
SCALE: 1"=40′

PAVEMENT MARKING LEGEND

- (A) PAV MRK TY I (W)(4")(BRK)
- (B) PAV MRK TY I (W)(4")(SLD)
- (C) PAV MRK TY I (W)(8")(SLD)
- (D) PAV MRK TY I (W)(12")(SLD)
- (E) PAV MRK TY I (W)(24")(SLD)
- (F) PAV MRK TY I (W)(ARROW)
- (G) PAV MRK TY I (W)(WORD)
- (H) REFL PAV MRKR TY II-C-R
- (I) REFL PAV MRKR TY II-A-A
- (J) REFL PAV MRKR TY I-C

NUMBER	DATE	REVISION	APPROVED

STATE OF TEXAS
GREGORY C. CALKINS
111309
LICENSED
PROFESSIONAL ENGINEER
9/28/2020

Binkley & Barfield, Inc
consulting engineers
Texas Registration Number F-257

CEDAR PARK

ANDERSON MILL ROAD
SIGNING AND STRIPING PLANS
STA 23+50 - STA 28+00

LEGEND

- PROPOSED SIGN
- EXISTING SIGN
- SPEED LIMIT XX — NEW SIGN
- SPEED LIMIT XX — RELOCATED EXISTING SIGN

NOTES:

1. ALL PAVEMENT MARKINGS SHALL BE FURNISHED AND INSTALLED IN ACCORDANCE WITH THE LATEST VERSIONS OF THE CITY'S CONSTRUCTION STANDARDS AND THE TMUTCD.
2. ALL EXISTING SIGNS SHALL BE RELOCATED AS SHOWN IN THE PLANS UNLESS NOTED OTHERWISE.
3. ALL STREET NAME PLAQUES LOCATED ON EXISTING STOP SIGNS SHALL BE RELOCATED WITH STOP SIGN.
4. ALL SIGNS TO BE FABRICATED AND INSTALLED IN ACCORDANCE TO THE LATEST VERSIONS OF THE TMUTCD.
5. LANE WIDTH DIMENSIONS ARE TO LIP OF GUTTER.

DESIGN BY:	GCC	SCALE:	1"=40′
DRAWN BY:	DSH		
CHECKED BY:	BMB	SHEET:	6 OF 17
APPROVED BY:	BDR		
PROJECT NO:	156402	PAGE:	76
DATE:	9/28/2020		

9/28/2020
1:19:46 PM
T:\156402*AndersonMill*Road\CADD\SHEETS\PMLY1*AM*04.dgn

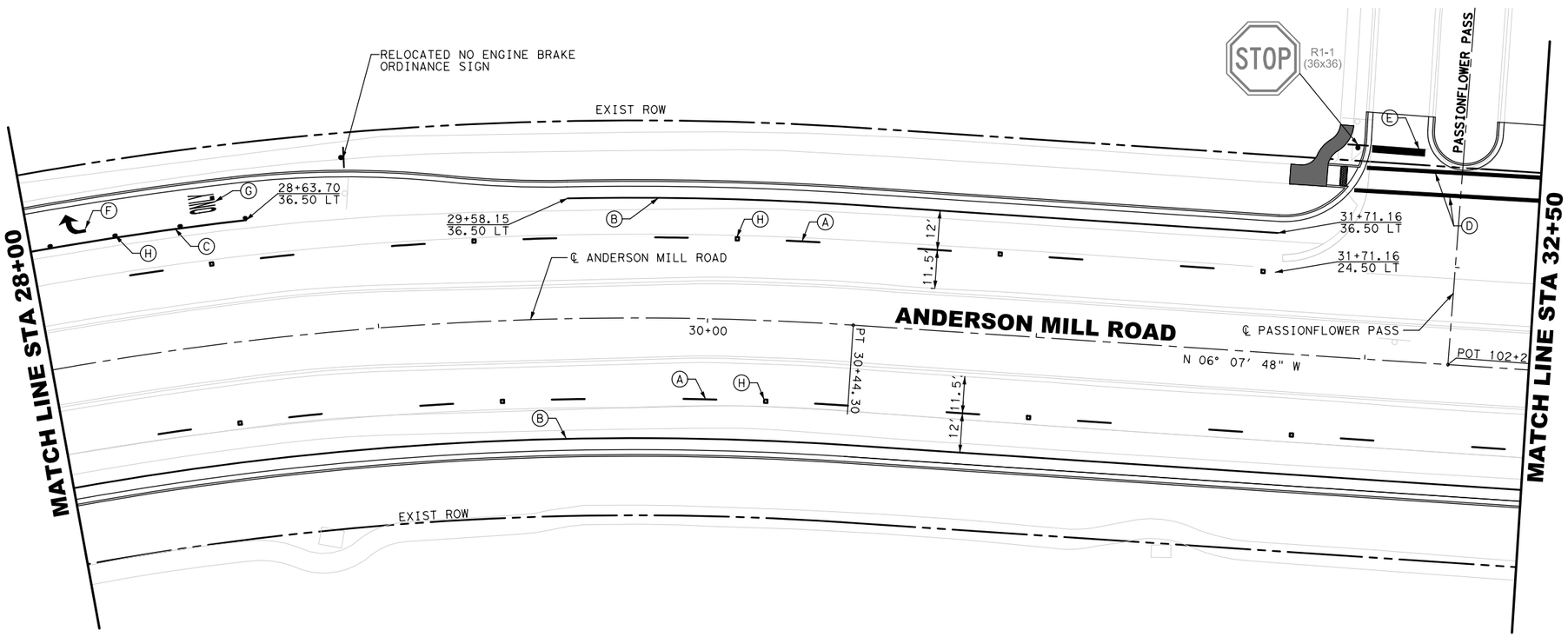

0' 10' 20' 40'
SCALE: 1"=40'

PAVEMENT MARKING LEGEND

- (A) PAV MRK TY I (W)(4")(BRK)
- (B) PAV MRK TY I (W)(4")(SLD)
- (C) PAV MRK TY I (W)(8")(SLD)
- (D) PAV MRK TY I (W)(12")(SLD)
- (E) PAV MRK TY I (W)(24")(SLD)
- (F) PAV MRK TY I (W)(ARROW)
- (G) PAV MRK TY I (W)(WORD)
- (H) REFL PAV MRKR TY II-C-R
- (I) REFL PAV MRKR TY II-A-A
- (J) REFL PAV MRKR TY I-C

LEGEND

- PROPOSED SIGN
- EXISTING SIGN
- SPEED LIMIT XX — NEW SIGN
- SPEED LIMIT XX — RELOCATED EXISTING SIGN

NOTES:

1. ALL PAVEMENT MARKINGS SHALL BE FURNISHED AND INSTALLED IN ACCORDANCE WITH THE LATEST VERSIONS OF THE CITY'S CONSTRUCTION STANDARDS AND THE TMUTCD.
2. ALL EXISTING SIGNS SHALL BE RELOCATED AS SHOWN IN THE PLANS UNLESS NOTED OTHERWISE.
3. ALL STREET NAME PLAQUES LOCATED ON EXISTING STOP SIGNS SHALL BE RELOCATED WITH STOP SIGN.
4. ALL SIGNS TO BE FABRICATED AND INSTALLED IN ACCORDANCE TO THE LATEST VERSIONS OF THE TMUTCD.
5. LANE WIDTH DIMENSIONS ARE TO LIP OF GUTTER.

NUMBER	DATE	REVISION	APPROVED

STATE OF TEXAS
GREGORY C. CALKINS
111309
LICENSED
PROFESSIONAL ENGINEER
9/28/2020

Binkley & Barfield, Inc
consulting engineers
Texas Registration Number F-257

CEDAR PARK

ANDERSON MILL ROAD
SIGNING AND STRIPING PLANS
STA 28+00 - STA 32+50

DESIGN BY:	GCC	SCALE:	1"=40'
DRAWN BY:	DSH		
CHECKED BY:	BMB		
APPROVED BY:	BDR	SHEET:	7 OF 17
PROJECT NO:	156402		
DATE:	9/28/2020	PAGE:	77

9/28/2020
1:19:49 PM
T:\156402*Anderson*Mill*Road\CADD\SHEETS\PMLY1*AM*05.dgn

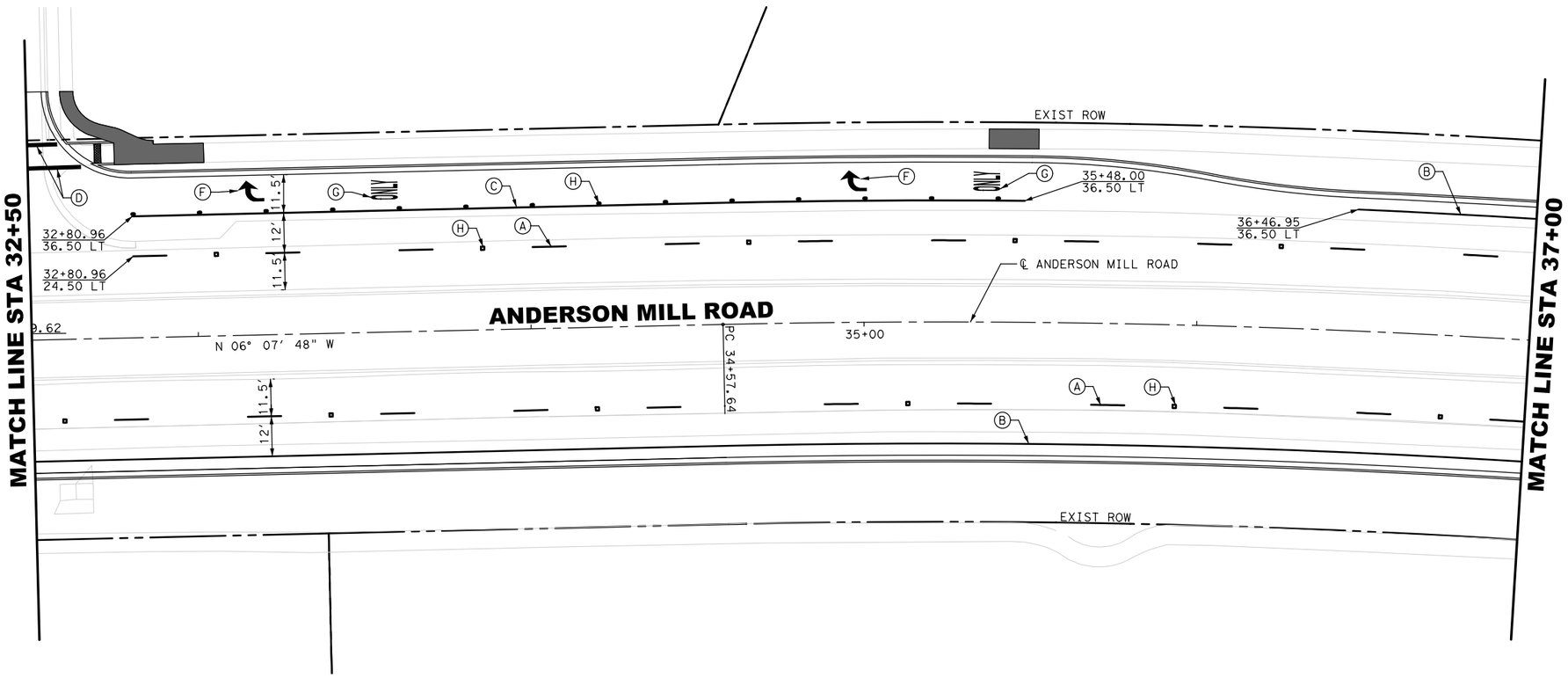

0′ 10′ 20′ 40′
SCALE: 1"=40′

PAVEMENT MARKING LEGEND

- (A) PAV MRK TY I (W)(4")(BRK)
- (B) PAV MRK TY I (W)(4")(SLD)
- (C) PAV MRK TY I (W)(8")(SLD)
- (D) PAV MRK TY I (W)(12")(SLD)
- (E) PAV MRK TY I (W)(24")(SLD)
- (F) PAV MRK TY I (W)(ARROW)
- (G) PAV MRK TY I (W)(WORD)
- (H) REFL PAV MRKR TY II-C-R
- (I) REFL PAV MRKR TY II-A-A
- (J) REFL PAV MRKR TY I-C

LEGEND

- PROPOSED SIGN
- EXISTING SIGN
- SPEED LIMIT XX — NEW SIGN
- SPEED LIMIT XX — RELOCATED EXISTING SIGN

NOTES:

1. ALL PAVEMENT MARKINGS SHALL BE FURNISHED AND INSTALLED IN ACCORDANCE WITH THE LATEST VERSIONS OF THE CITY'S CONSTRUCTION STANDARDS AND THE TMUTCD.
2. ALL EXISTING SIGNS SHALL BE RELOCATED AS SHOWN IN THE PLANS UNLESS NOTED OTHERWISE.
3. ALL STREET NAME PLAQUES LOCATED ON EXISTING STOP SIGNS SHALL BE RELOCATED WITH STOP SIGN.
4. ALL SIGNS TO BE FABRICATED AND INSTALLED IN ACCORDANCE TO THE LATEST VERSIONS OF THE TMUTCD.
5. LANE WIDTH DIMENSIONS ARE TO LIP OF GUTTER.

NUMBER	DATE	REVISION	APPROVED

STATE OF TEXAS
GREGORY C. CALKINS
111309
LICENSED
PROFESSIONAL ENGINEER
9/28/2020

Binkley & Barfield, Inc
consulting engineers
Texas Registration Number F-257

CEDAR PARK

ANDERSON MILL ROAD
SIGNING AND STRIPING PLANS
STA 32+50 - STA 37+00

DESIGN BY:	GCC	SCALE:	1"=40′
DRAWN BY:	DSH		
CHECKED BY:	BMB		
APPROVED BY:	BDR	SHEET:	8 OF 17
PROJECT NO:	156402		
DATE:	9/28/2020	PAGE:	78

9/28/2020
1:19:53 PM
I:\156402*Anderson*Mill*Road\CADD\SHEETS\PMLY1*AM*06.dgn

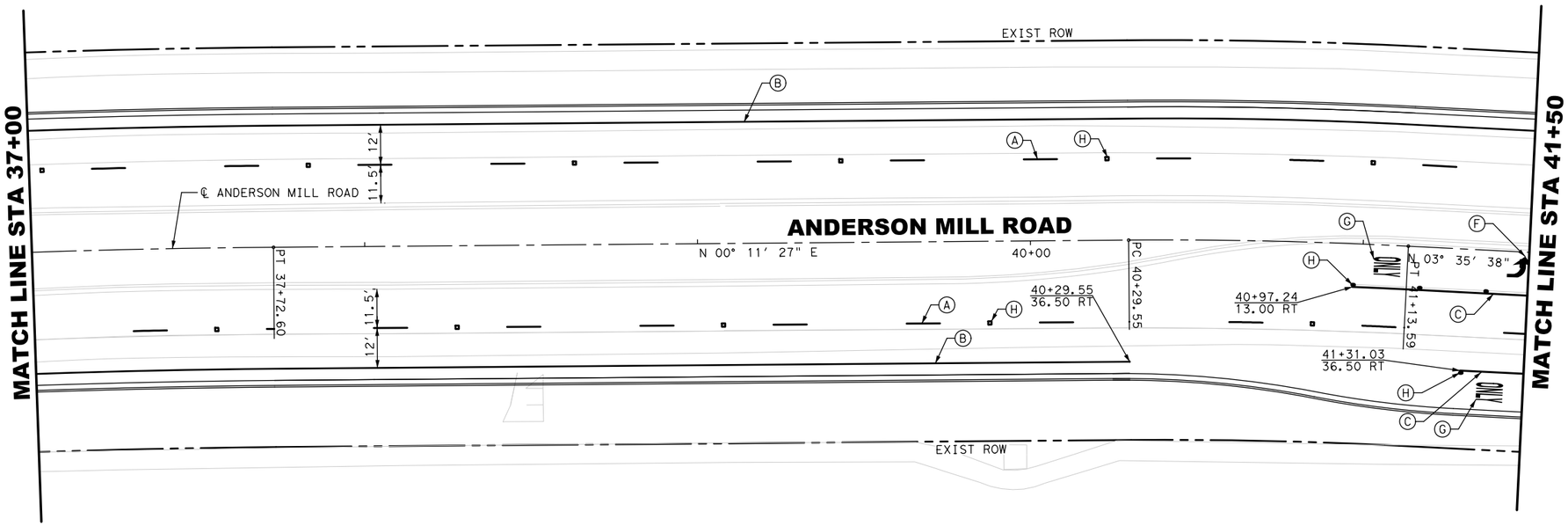

0′ 10′ 20′ 40′

SCALE: 1"=40′

PAVEMENT MARKING LEGEND

- (A) PAV MRK TY I (W)(4")(BRK)
- (B) PAV MRK TY I (W)(4")(SLD)
- (C) PAV MRK TY I (W)(8")(SLD)
- (D) PAV MRK TY I (W)(12")(SLD)
- (E) PAV MRK TY I (W)(24")(SLD)
- (F) PAV MRK TY I (W)(ARROW)
- (G) PAV MRK TY I (W)(WORD)
- (H) REFL PAV MRKR TY II-C-R
- (I) REFL PAV MRKR TY II-A-A
- (J) REFL PAV MRKR TY I-C

NUMBER	DATE	REVISION	APPROVED

STATE OF TEXAS
GREGORY C. CALKINS
111309
LICENSED
PROFESSIONAL ENGINEER

9/28/2020

Binkley & Barfield, Inc
consulting engineers
Texas Registration Number F-257

CEDAR PARK

ANDERSON MILL ROAD
SIGNING AND STRIPING PLANS
STA 37+00 - STA 41+50

LEGEND

- PROPOSED SIGN
- EXISTING SIGN
- SPEED LIMIT XX — NEW SIGN
- SPEED LIMIT XX — RELOCATED EXISTING SIGN

NOTES:

1. ALL PAVEMENT MARKINGS SHALL BE FURNISHED AND INSTALLED IN ACCORDANCE WITH THE LATEST VERSIONS OF THE CITY'S CONSTRUCTION STANDARDS AND THE TMUTCD.
2. ALL EXISTING SIGNS SHALL BE RELOCATED AS SHOWN IN THE PLANS UNLESS NOTED OTHERWISE.
3. ALL STREET NAME PLAQUES LOCATED ON EXISTING STOP SIGNS SHALL BE RELOCATED WITH STOP SIGN.
4. ALL SIGNS TO BE FABRICATED AND INSTALLED IN ACCORDANCE TO THE LATEST VERSIONS OF THE TMUTCD.
5. LANE WIDTH DIMENSIONS ARE TO LIP OF GUTTER.

DESIGN BY:	GCC	SCALE:	1"=40′
DRAWN BY:	DSH		
CHECKED BY:	BMB		
APPROVED BY:	BDR	SHEET:	9 OF 17
PROJECT NO:	156402		
DATE:	9/28/2020	PAGE:	79

9/28/2020
1:19:57 PM
T:\156402*Anderson*Mill*Road\CADD\SHEETS\PMLY1*AM*07.dgn

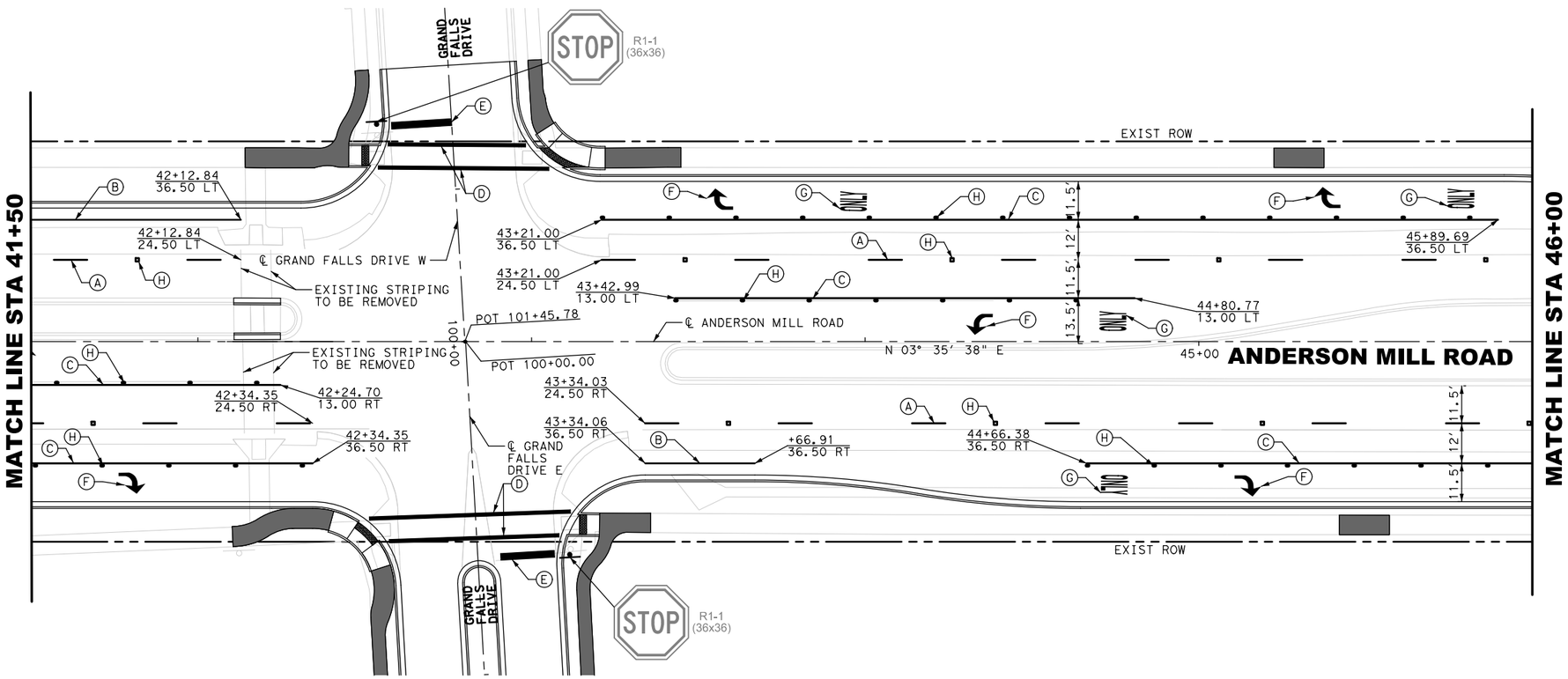

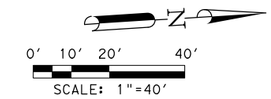

PAVEMENT MARKING LEGEND

- (A) PAV MRK TY I (W)(4")(BRK)
- (B) PAV MRK TY I (W)(4")(SLD)
- (C) PAV MRK TY I (W)(8")(SLD)
- (D) PAV MRK TY I (W)(12")(SLD)
- (E) PAV MRK TY I (W)(24")(SLD)
- (F) PAV MRK TY I (W)(ARROW)
- (G) PAV MRK TY I (W)(WORD)
- (H) REFL PAV MRKR TY II-C-R
- (I) REFL PAV MRKR TY II-A-A
- (J) REFL PAV MRKR TY I-C

NUMBER	DATE	REVISION	APPROVED

STATE OF TEXAS
GREGORY C. CALKINS
111309
LICENSED
PROFESSIONAL ENGINEER
9/28/2020

Binkley & Barfield, Inc
consulting engineers
Texas Registration Number F-257

CEDAR PARK

ANDERSON MILL ROAD
SIGNING AND STRIPING PLANS
STA 41+50 - STA 46+00

LEGEND

- PROPOSED SIGN
- EXISTING SIGN
- SPEED LIMIT XX — NEW SIGN
- SPEED LIMIT XX — RELOCATED EXISTING SIGN

NOTES:

1. ALL PAVEMENT MARKINGS SHALL BE FURNISHED AND INSTALLED IN ACCORDANCE WITH THE LATEST VERSIONS OF THE CITY'S CONSTRUCTION STANDARDS AND THE TMUTCD.
2. ALL EXISTING SIGNS SHALL BE RELOCATED AS SHOWN IN THE PLANS UNLESS NOTED OTHERWISE.
3. ALL STREET NAME PLAQUES LOCATED ON EXISTING STOP SIGNS SHALL BE RELOCATED WITH STOP SIGN.
4. ALL SIGNS TO BE FABRICATED AND INSTALLED IN ACCORDANCE TO THE LATEST VERSIONS OF THE TMUTCD.
5. LANE WIDTH DIMENSIONS ARE TO LIP OF GUTTER.

DESIGN BY:	GCC	SCALE:	1"=40'
DRAWN BY:	DSH		
CHECKED BY:	BMB	SHEET:	10 OF 17
APPROVED BY:	BDR		
PROJECT NO:	156402	PAGE:	80
DATE:	9/28/2020		

9/28/2020
1:19:59 PM
T:\156402*Anderson*Mill*Road\CADD\SHEETS\PMLY1*AM*08.dgn

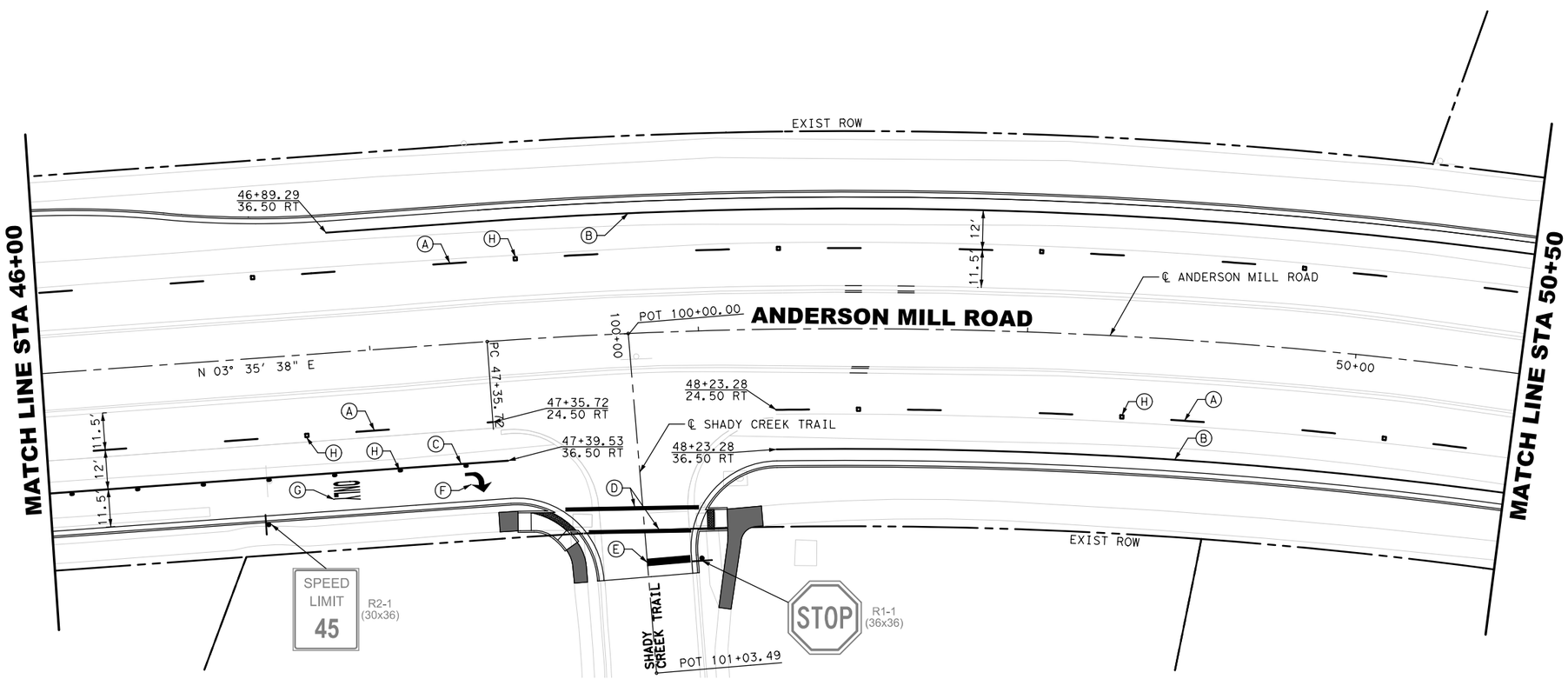

0' 10' 20' 40'
SCALE: 1"=40'

PAVEMENT MARKING LEGEND

- (A) PAV MRK TY I (W)(4")(BRK)
- (B) PAV MRK TY I (W)(4")(SLD)
- (C) PAV MRK TY I (W)(8")(SLD)
- (D) PAV MRK TY I (W)(12")(SLD)
- (E) PAV MRK TY I (W)(24")(SLD)
- (F) PAV MRK TY I (W)(ARROW)
- (G) PAV MRK TY I (W)(WORD)
- (H) REFL PAV MRKR TY II-C-R
- (I) REFL PAV MRKR TY II-A-A
- (J) REFL PAV MRKR TY I-C

NUMBER	DATE	REVISION	APPROVED

STATE OF TEXAS
GREGORY C. CALKINS
111309
LICENSED
PROFESSIONAL ENGINEER
9/28/2020

Binkley & Barfield, Inc
consulting engineers
Texas Registration Number F-257

CEDAR PARK

ANDERSON MILL ROAD
SIGNING AND STRIPING PLANS
STA 46+00 - STA 50+50

LEGEND

- PROPOSED SIGN
- EXISTING SIGN
- SPEED LIMIT XX — NEW SIGN
- SPEED LIMIT XX — RELOCATED EXISTING SIGN

NOTES:

1. ALL PAVEMENT MARKINGS SHALL BE FURNISHED AND INSTALLED IN ACCORDANCE WITH THE LATEST VERSIONS OF THE CITY'S CONSTRUCTION STANDARDS AND THE TMUTCD.
2. ALL EXISTING SIGNS SHALL BE RELOCATED AS SHOWN IN THE PLANS UNLESS NOTED OTHERWISE.
3. ALL STREET NAME PLAQUES LOCATED ON EXISTING STOP SIGNS SHALL BE RELOCATED WITH STOP SIGN.
4. ALL SIGNS TO BE FABRICATED AND INSTALLED IN ACCORDANCE TO THE LATEST VERSIONS OF THE TMUTCD.
5. LANE WIDTH DIMENSIONS ARE TO LIP OF GUTTER.

DESIGN BY:	GCC	SCALE:	1"=40'
DRAWN BY:	DSH		
CHECKED BY:	BMB		
APPROVED BY:	BDR	SHEET:	11 OF 17
PROJECT NO:	156402		
DATE:	9/28/2020	PAGE:	81

9/28/2020
1:20:03 PM
T:\156402*AndersonMill*Road\CADD\SHEETS\PMLY1*AM*09.dgn

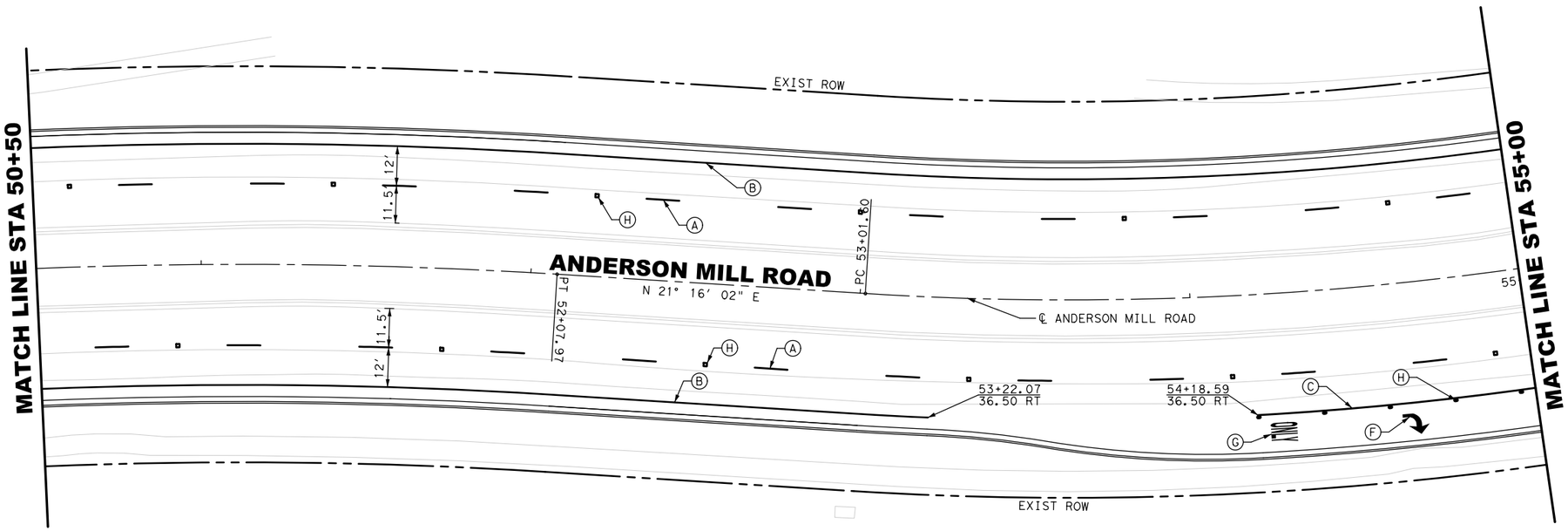

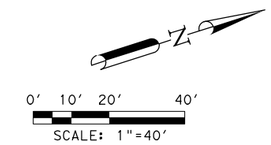

PAVEMENT MARKING LEGEND

- (A) PAV MRK TY I (W)(4")(BRK)
- (B) PAV MRK TY I (W)(4")(SLD)
- (C) PAV MRK TY I (W)(8")(SLD)
- (D) PAV MRK TY I (W)(12")(SLD)
- (E) PAV MRK TY I (W)(24")(SLD)
- (F) PAV MRK TY I (W)(ARROW)
- (G) PAV MRK TY I (W)(WORD)
- (H) REFL PAV MRKR TY II-C-R
- (I) REFL PAV MRKR TY II-A-A
- (J) REFL PAV MRKR TY I-C

NUMBER	DATE	REVISION	APPROVED

STATE OF TEXAS
GREGORY C. CALKINS
111309
LICENSED
PROFESSIONAL ENGINEER
9/28/2020

Binkley & Barfield, Inc
consulting engineers
Texas Registration Number F-257

CEDAR PARK

ANDERSON MILL ROAD
SIGNING AND STRIPING PLANS
STA 50+50 - STA 55+00

LEGEND

- PROPOSED SIGN
- EXISTING SIGN
- SPEED LIMIT XX — NEW SIGN
- SPEED LIMIT XX — RELOCATED EXISTING SIGN

NOTES:

1. ALL PAVEMENT MARKINGS SHALL BE FURNISHED AND INSTALLED IN ACCORDANCE WITH THE LATEST VERSIONS OF THE CITY'S CONSTRUCTION STANDARDS AND THE TMUTCD.
2. ALL EXISTING SIGNS SHALL BE RELOCATED AS SHOWN IN THE PLANS UNLESS NOTED OTHERWISE.
3. ALL STREET NAME PLAQUES LOCATED ON EXISTING STOP SIGNS SHALL BE RELOCATED WITH STOP SIGN.
4. ALL SIGNS TO BE FABRICATED AND INSTALLED IN ACCORDANCE TO THE LATEST VERSIONS OF THE TMUTCD.
5. LANE WIDTH DIMENSIONS ARE TO LIP OF GUTTER.

DESIGN BY:	GCC	SCALE:	1"=40'
DRAWN BY:	DSH		
CHECKED BY:	BMB	SHEET:	12 OF 17
APPROVED BY:	BDR		
PROJECT NO:	156402	PAGE:	82
DATE:	9/28/2020		

9/28/2020
1:20:07 PM
I:\156402*Anderson*Mill*Road\CADD\SHEETS\PMLY1*AM*10.dgn

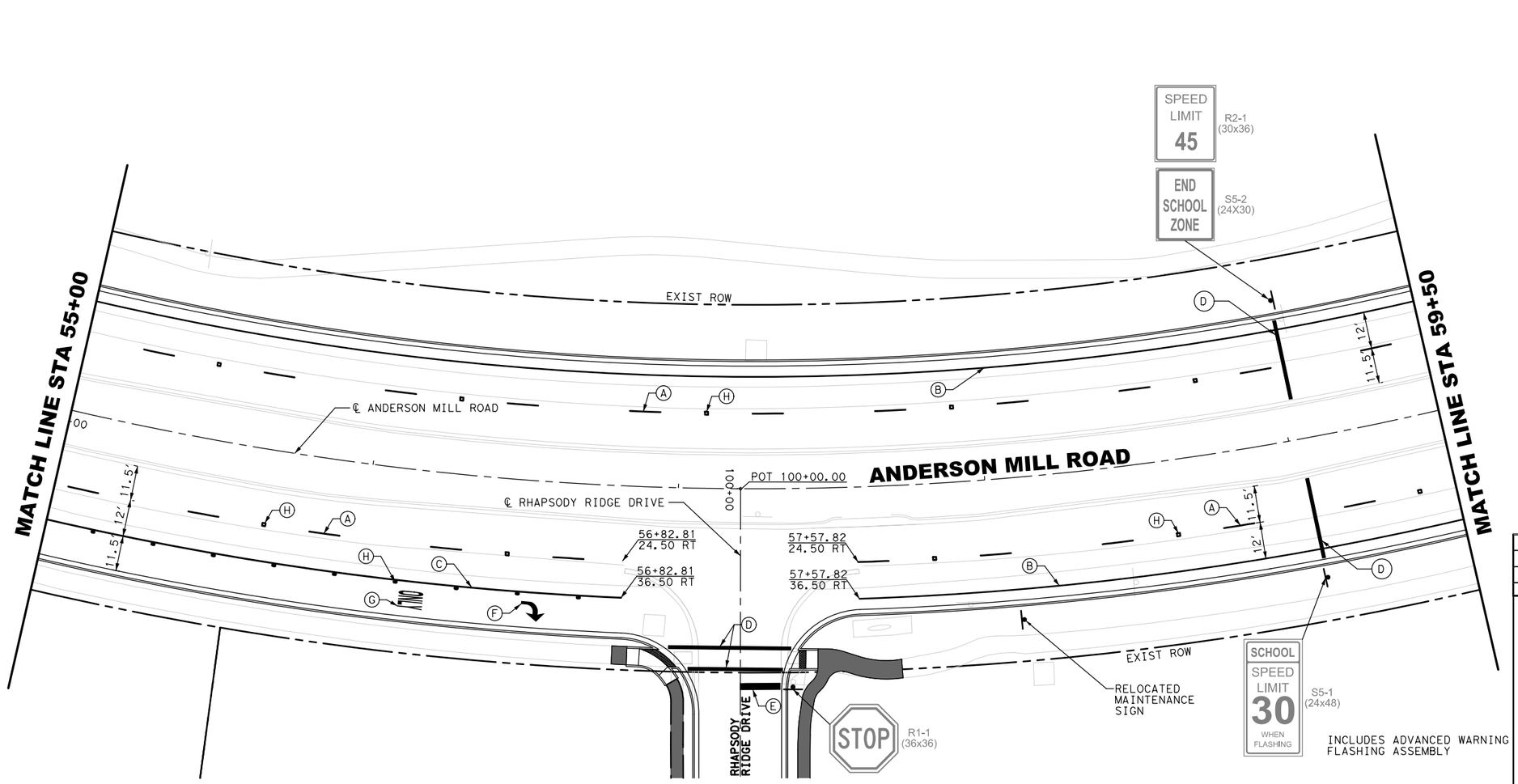

0' 10' 20' 40'
SCALE: 1"=40'

PAVEMENT MARKING LEGEND

- (A) PAV MRK TY I (W)(4")(BRK)
- (B) PAV MRK TY I (W)(4")(SLD)
- (C) PAV MRK TY I (W)(8")(SLD)
- (D) PAV MRK TY I (W)(12")(SLD)
- (E) PAV MRK TY I (W)(24")(SLD)
- (F) PAV MRK TY I (W)(ARROW)
- (G) PAV MRK TY I (W)(WORD)
- (H) REFL PAV MRKR TY II-C-R
- (I) REFL PAV MRKR TY II-A-A
- (J) REFL PAV MRKR TY I-C

LEGEND

- PROPOSED SIGN
- EXISTING SIGN
- SPEED LIMIT XX — NEW SIGN
- SPEED LIMIT XX — RELOCATED EXISTING SIGN

NOTES:

1. ALL PAVEMENT MARKINGS SHALL BE FURNISHED AND INSTALLED IN ACCORDANCE WITH THE LATEST VERSIONS OF THE CITY'S CONSTRUCTION STANDARDS AND THE TMUTCD.
2. ALL EXISTING SIGNS SHALL BE RELOCATED AS SHOWN IN THE PLANS UNLESS NOTED OTHERWISE.
3. ALL STREET NAME PLAQUES LOCATED ON EXISTING STOP SIGNS SHALL BE RELOCATED WITH STOP SIGN.
4. ALL SIGNS TO BE FABRICATED AND INSTALLED IN ACCORDANCE TO THE LATEST VERSIONS OF THE TMUTCD.
5. LANE WIDTH DIMENSIONS ARE TO LIP OF GUTTER.

NUMBER	DATE	REVISION	APPROVED

STATE OF TEXAS
GREGORY C. CALKINS
111309
LICENSED
PROFESSIONAL ENGINEER
9/28/2020

Binkley & Barfield, Inc
consulting engineers
Texas Registration Number F-257

CEDAR PARK

ANDERSON MILL ROAD
SIGNING AND STRIPING PLANS
STA 55+00 - STA 59+50

DESIGN BY:	GCC	SCALE:	1"=40'
DRAWN BY:	DSH		
CHECKED BY:	BMB		
APPROVED BY:	BDR	SHEET:	13 OF 17
PROJECT NO:	156402		
DATE:	9/28/2020	PAGE:	83

9/28/2020
1:20:09 PM
T:\156402*Anderson*Mill*Road\CADD\SHEETS\PMLY1*AM*11.dgn

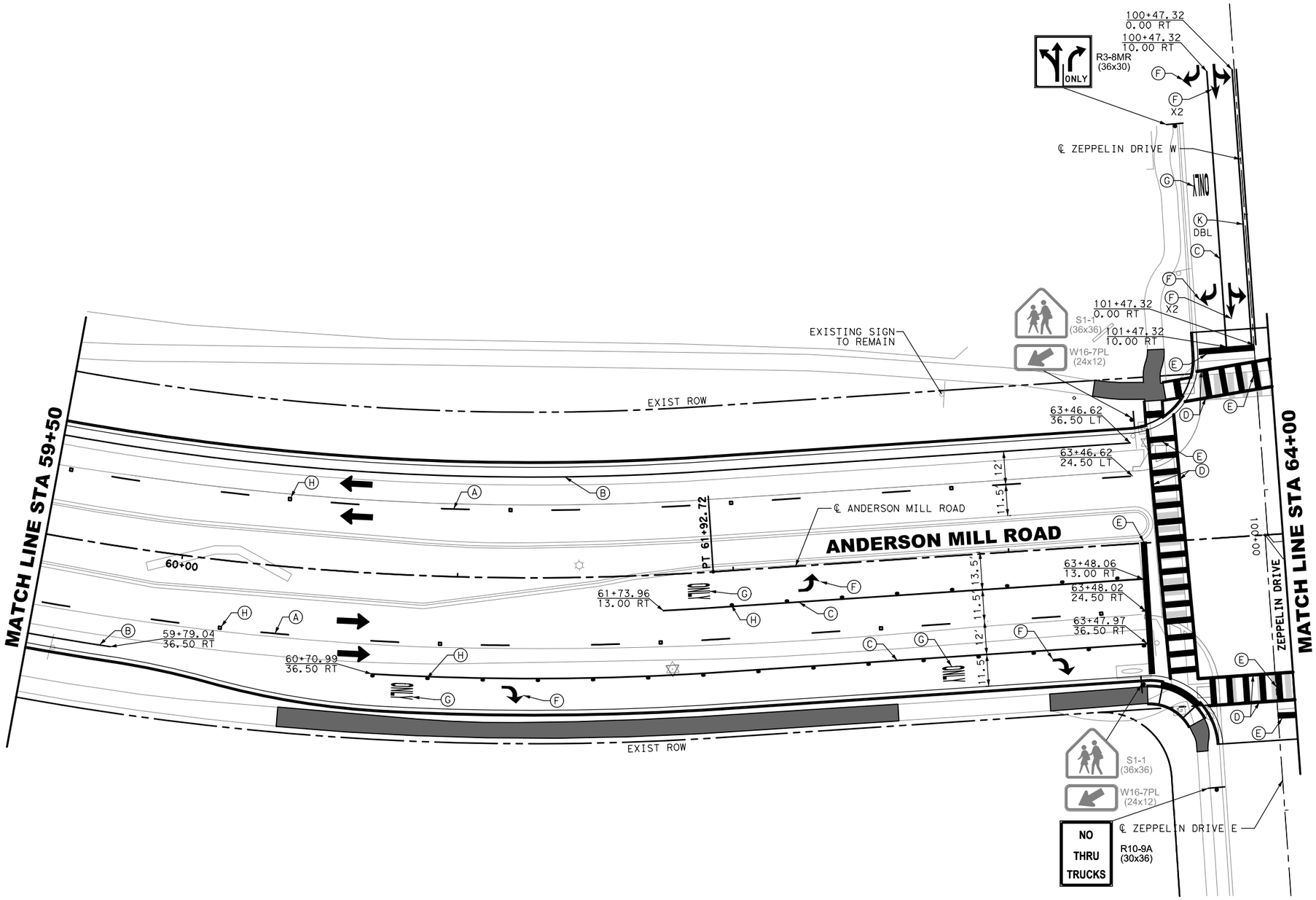

0' 10' 20' 40'
SCALE: 1"=40'

PAVEMENT MARKING LEGEND

- (A) PAV MRK TY I (W)(4")(BRK)
- (B) PAV MRK TY I (W)(4")(SLD)
- (C) PAV MRK TY I (W)(8")(SLD)
- (D) PAV MRK TY I (W)(12")(SLD)
- (E) PAV MRK TY I (W)(24")(SLD)
- (F) PAV MRK TY I (W)(ARROW)
- (G) PAV MRK TY I (W)(WORD)
- (H) REFL PAV MRKR TY II-C-R
- (I) REFL PAV MRKR TY II-A-A
- (J) REFL PAV MRKR TY I-C
- (K) PAV MRK TY I (Y)(4")(SLD)

LEGEND

- PROPOSED SIGN
- EXISTING SIGN
- SPEED LIMIT XX — NEW SIGN
- SPEED LIMIT XX — RELOCATED EXISTING SIGN

NOTES:

1. ALL PAVEMENT MARKINGS SHALL BE FURNISHED AND INSTALLED IN ACCORDANCE WITH THE LATEST VERSIONS OF THE CITY'S CONSTRUCTION STANDARDS AND THE TMUTCD.
2. ALL EXISTING SIGNS SHALL BE RELOCATED AS SHOWN IN THE PLANS UNLESS NOTED OTHERWISE.
3. ALL STREET NAME PLAQUES LOCATED ON EXISTING STOP SIGNS SHALL BE RELOCATED WITH STOP SIGN.
4. ALL SIGNS TO BE FABRICATED AND INSTALLED IN ACCORDANCE TO THE LATEST VERSIONS OF THE TMUTCD.
5. LANE WIDTH DIMENSIONS ARE TO LIP OF GUTTER.

NUMBER	DATE	REVISION	APPROVED

STATE OF TEXAS
GREGORY C. CALKINS
111309
LICENSED
PROFESSIONAL ENGINEER
6/30/2021

Binkley & Barfield, Inc
consulting engineers
Texas Registration Number F-257

CEDAR PARK

ANDERSON MILL ROAD
SIGNING AND STRIPING PLANS
STA 59+50 - STA 64+00

DESIGN BY:	GCC	SCALE: 1"=40'	
DRAWN BY:	DSH		
CHECKED BY:	BMB		
APPROVED BY:	BDR	SHEET: 14 OF 17	
PROJECT NO:	156402		
DATE:	6/30/2021	PAGE: 84	

6/30/2021
3:39:47 PM
T:\156402*Anderson*Mill*Road\CADD\SHEETS\PML Y1*AM*12.dgn

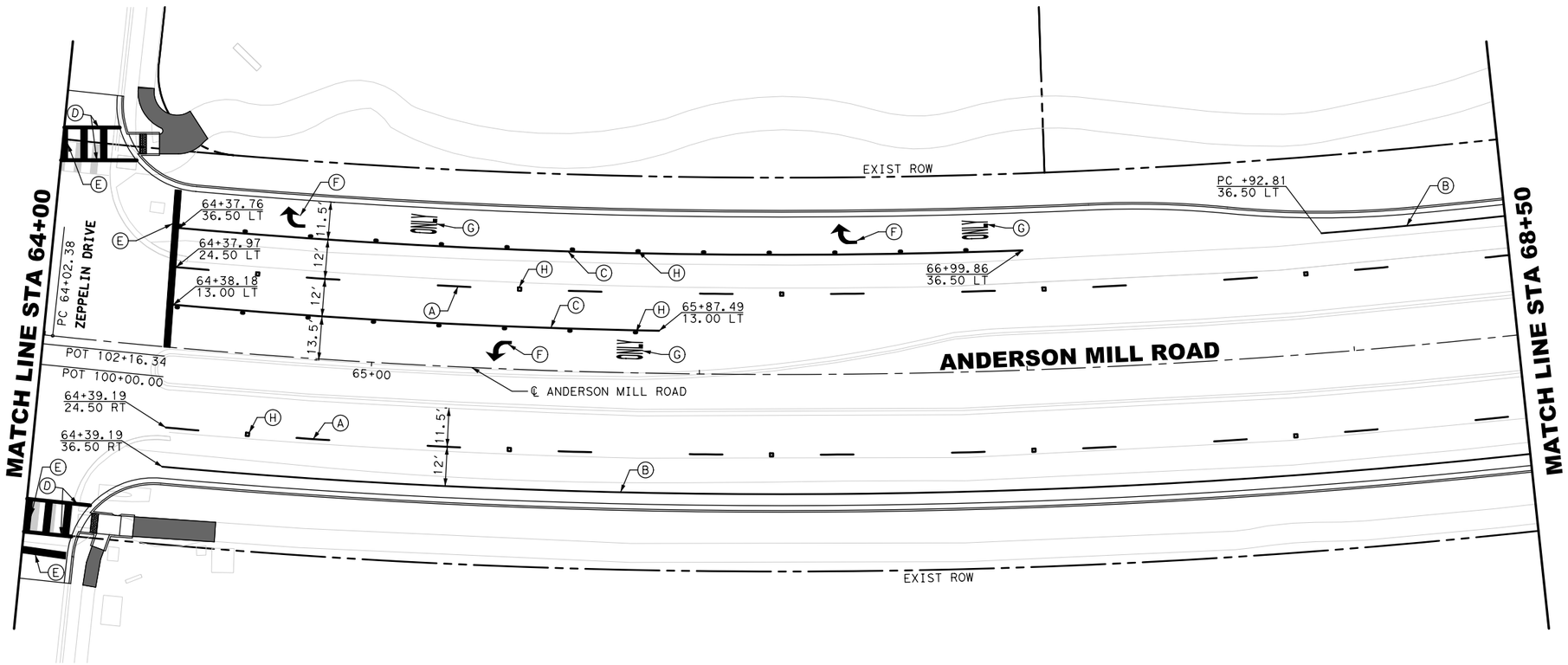

0' 10' 20' 40'
SCALE: 1"=40'

PAVEMENT MARKING LEGEND

- (A) PAV MRK TY I (W)(4")(BRK)
- (B) PAV MRK TY I (W)(4")(SLD)
- (C) PAV MRK TY I (W)(8")(SLD)
- (D) PAV MRK TY I (W)(12")(SLD)
- (E) PAV MRK TY I (W)(24")(SLD)
- (F) PAV MRK TY I (W)(ARROW)
- (G) PAV MRK TY I (W)(WORD)
- (H) REFL PAV MRKR TY II-C-R
- (I) REFL PAV MRKR TY II-A-A
- (J) REFL PAV MRKR TY I-C

LEGEND

- PROPOSED SIGN
- EXISTING SIGN
- SPEED LIMIT XX — NEW SIGN
- SPEED LIMIT XX — RELOCATED EXISTING SIGN

NOTES:

1. ALL PAVEMENT MARKINGS SHALL BE FURNISHED AND INSTALLED IN ACCORDANCE WITH THE LATEST VERSIONS OF THE CITY'S CONSTRUCTION STANDARDS AND THE TMUTCD.
2. ALL EXISTING SIGNS SHALL BE RELOCATED AS SHOWN IN THE PLANS UNLESS NOTED OTHERWISE.
3. ALL STREET NAME PLAQUES LOCATED ON EXISTING STOP SIGNS SHALL BE RELOCATED WITH STOP SIGN.
4. ALL SIGNS TO BE FABRICATED AND INSTALLED IN ACCORDANCE TO THE LATEST VERSIONS OF THE TMUTCD.
5. LANE WIDTH DIMENSIONS ARE TO LIP OF GUTTER.

NUMBER	DATE	REVISION	APPROVED

STATE OF TEXAS
GREGORY C. CALKINS
111309
LICENSED
PROFESSIONAL ENGINEER
9/28/2020

Binkley & Barfield, Inc
consulting engineers
Texas Registration Number F-257

CEDAR PARK

ANDERSON MILL ROAD
SIGNING AND STRIPING PLANS
STA 64+00 - STA 68+50

DESIGN BY:	GCC	SCALE:	1"=40'
DRAWN BY:	DSH		
CHECKED BY:	BMB		
APPROVED BY:	BDR	SHEET:	15 OF 17
PROJECT NO:	156402		
DATE:	9/28/2020	PAGE:	85

9/28/2020
1:20:16 PM
T:\156402*Anderson*Mill*Road\CADD\SHEETS\PMLY1*AM*13.dgn

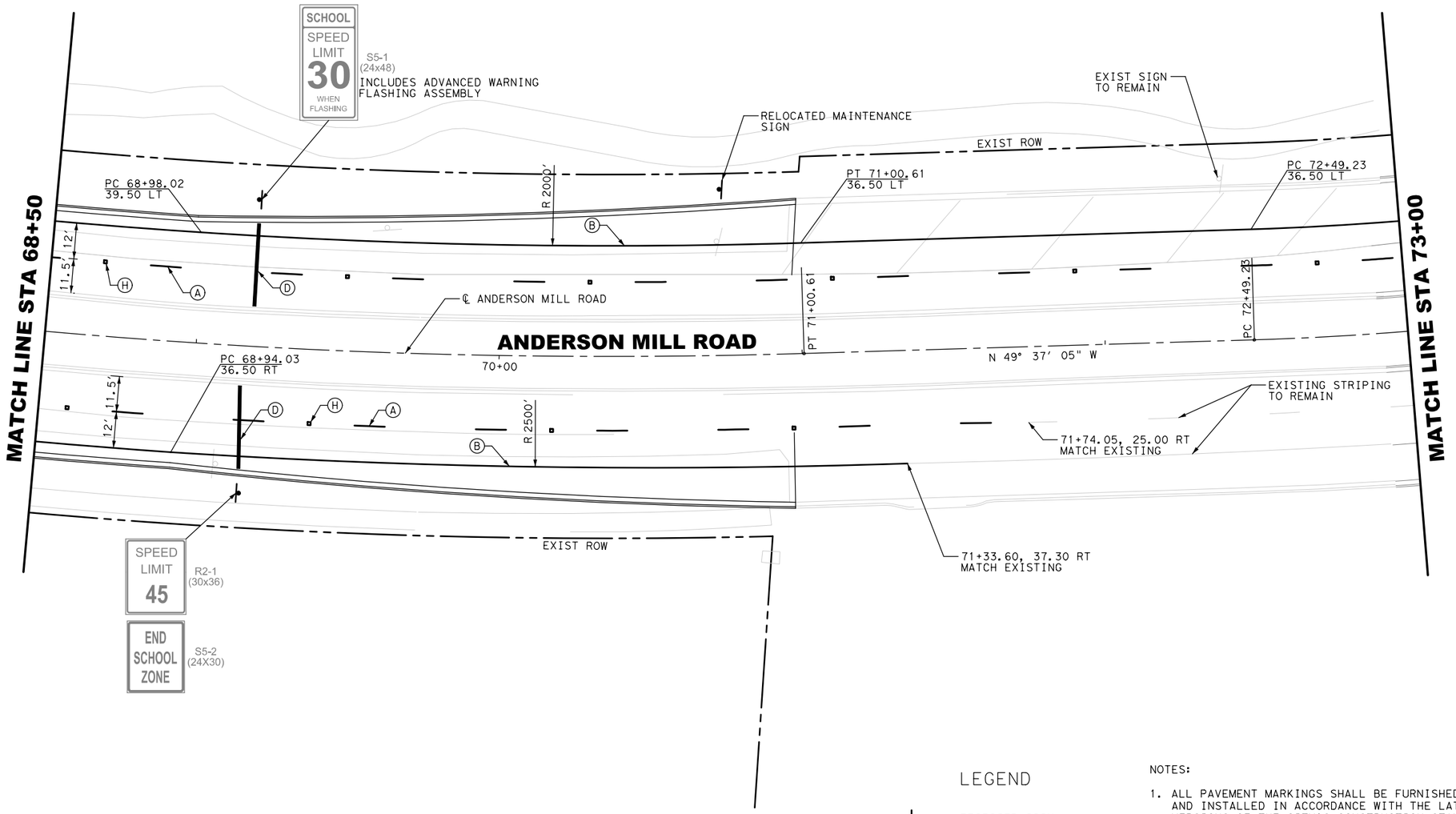

0' 10' 20' 40'
SCALE: 1"=40'

PAVEMENT MARKING LEGEND

- (A) PAV MRK TY I (W)(4")(BRK)
- (B) PAV MRK TY I (W)(4")(SLD)
- (C) PAV MRK TY I (W)(8")(SLD)
- (D) PAV MRK TY I (W)(12")(SLD)
- (E) PAV MRK TY I (W)(24")(SLD)
- (F) PAV MRK TY I (W)(ARROW)
- (G) PAV MRK TY I (W)(WORD)
- (H) REFL PAV MRKR TY II-C-R
- (I) REFL PAV MRKR TY II-A-A
- (J) REFL PAV MRKR TY I-C

LEGEND

- PROPOSED SIGN
- EXISTING SIGN
- SPEED LIMIT XX — NEW SIGN
- SPEED LIMIT XX — RELOCATED EXISTING SIGN

NOTES:

1. ALL PAVEMENT MARKINGS SHALL BE FURNISHED AND INSTALLED IN ACCORDANCE WITH THE LATEST VERSIONS OF THE CITY'S CONSTRUCTION STANDARDS AND THE TMUTCD.
2. ALL EXISTING SIGNS SHALL BE RELOCATED AS SHOWN IN THE PLANS UNLESS NOTED OTHERWISE.
3. ALL STREET NAME PLAQUES LOCATED ON EXISTING STOP SIGNS SHALL BE RELOCATED WITH STOP SIGN.
4. ALL SIGNS TO BE FABRICATED AND INSTALLED IN ACCORDANCE TO THE LATEST VERSIONS OF THE TMUTCD.
5. LANE WIDTH DIMENSIONS ARE TO LIP OF GUTTER.

NUMBER	DATE	REVISION	APPROVED

STATE OF TEXAS
GREGORY C. CALKINS
111309
LICENSED
PROFESSIONAL ENGINEER
9/28/2020

Binkley & Barfield, Inc
consulting engineers
Texas Registration Number F-257

CEDAR PARK

ANDERSON MILL ROAD
SIGNING AND STRIPING PLANS
STA 68+50 - STA 73+00

DESIGN BY:	GCC	SCALE:	1"=40'
DRAWN BY:	DSH		
CHECKED BY:	BMB		
APPROVED BY:	BDR	SHEET:	16 OF 17
PROJECT NO:	156402		
DATE:	9/28/2020	PAGE:	86

9/28/2020
1:20:19 PM
T:\156402*Anderson*Mill*Road\CADD\SHEETS\PMLY1*AM*14.dgn

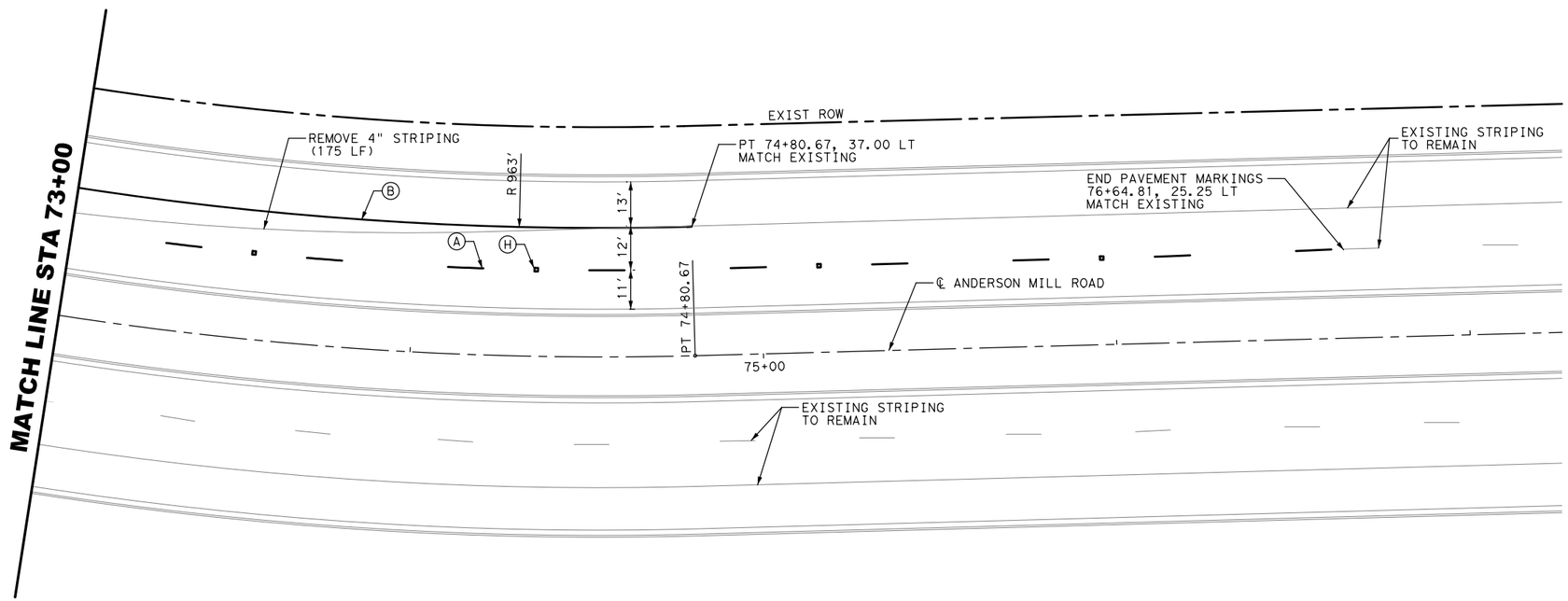

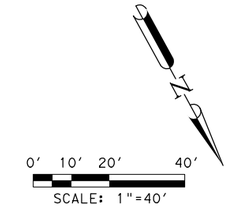

PAVEMENT MARKING LEGEND

- (A) PAV MRK TY I (W)(4")(BRK)
- (B) PAV MRK TY I (W)(4")(SLD)
- (C) PAV MRK TY I (W)(8")(SLD)
- (D) PAV MRK TY I (W)(12")(SLD)
- (E) PAV MRK TY I (W)(24")(SLD)
- (F) PAV MRK TY I (W)(ARROW)
- (G) PAV MRK TY I (W)(WORD)
- (H) REFL PAV MRKR TY II-C-R
- (I) REFL PAV MRKR TY II-A-A
- (J) REFL PAV MRKR TY I-C

LEGEND

- PROPOSED SIGN
- EXISTING SIGN
- SPEED LIMIT XX — NEW SIGN
- SPEED LIMIT XX — RELOCATED EXISTING SIGN

NOTES:

1. ALL PAVEMENT MARKINGS SHALL BE FURNISHED AND INSTALLED IN ACCORDANCE WITH THE LATEST VERSIONS OF THE CITY'S CONSTRUCTION STANDARDS AND THE TMUTCD.
2. ALL EXISTING SIGNS SHALL BE RELOCATED AS SHOWN IN THE PLANS UNLESS NOTED OTHERWISE.
3. ALL STREET NAME PLAQUES LOCATED ON EXISTING STOP SIGNS SHALL BE RELOCATED WITH STOP SIGN.
4. ALL SIGNS TO BE FABRICATED AND INSTALLED IN ACCORDANCE TO THE LATEST VERSIONS OF THE TMUTCD.
5. LANE WIDTH DIMENSIONS ARE TO LIP OF GUTTER.

NUMBER	DATE	REVISION	APPROVED

STATE OF TEXAS
GREGORY C. CALKINS
111309
LICENSED
PROFESSIONAL ENGINEER
9/28/2020

Binkley & Barfield, Inc
consulting engineers
Texas Registration Number F-257

CEDAR PARK

ANDERSON MILL ROAD
SIGNING AND STRIPING PLANS
STA 73+00 TO END PROJECT

DESIGN BY:	GCC	SCALE:	1"=40'
DRAWN BY:	DSH		
CHECKED BY:	BMB		
APPROVED BY:	BDR	SHEET:	17 OF 17
PROJECT NO:	156402		
DATE:	9/28/2020	PAGE:	87

9/28/2020
1:20:24 PM
T:\156402*AndersonMill*Road\CADD\SHEETS\PMLY1*AM*15.dgn

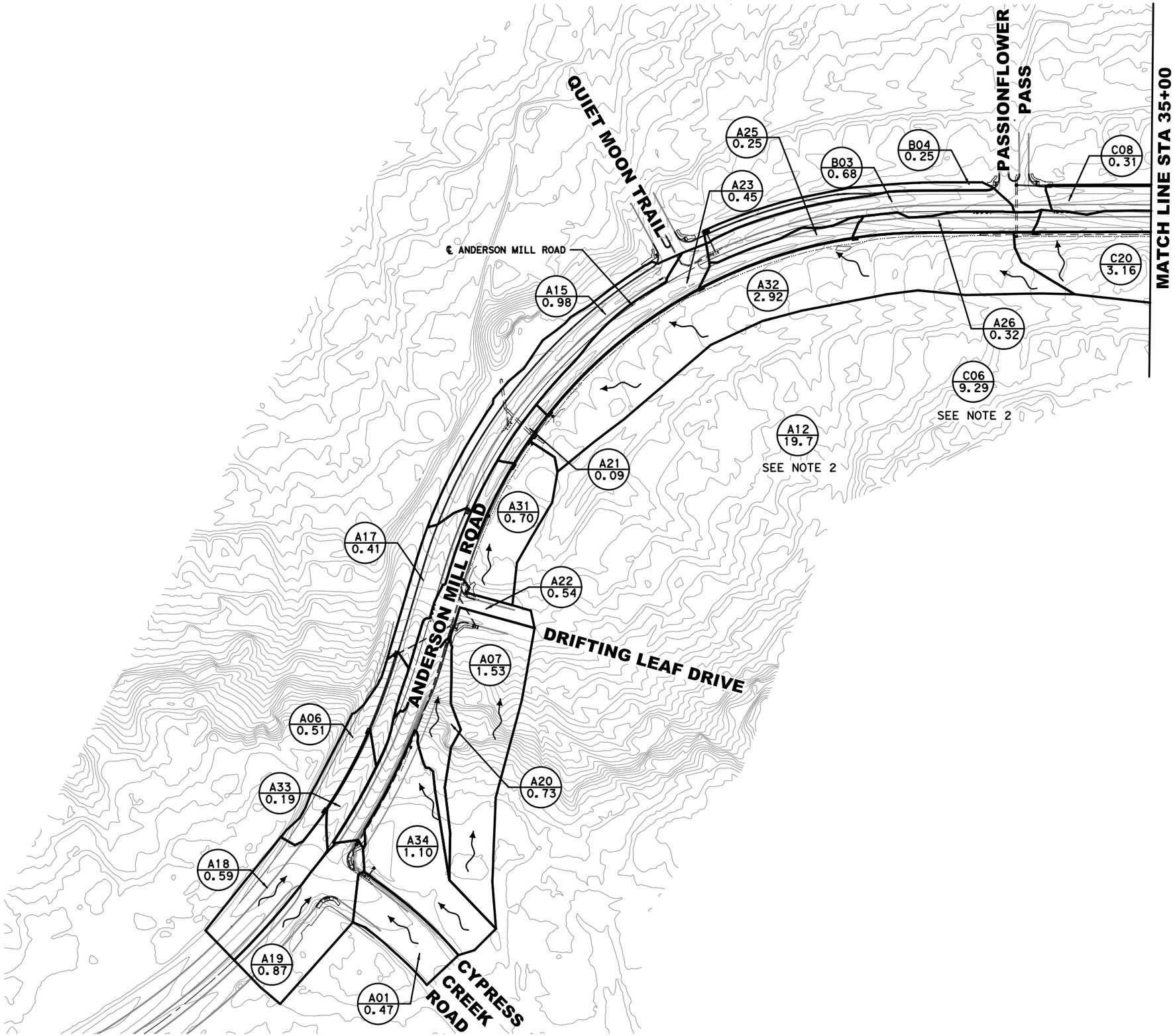

0' 50' 100' 200'

SCALE: 1"=200'

LEGEND

- EXISTING PLANIMETRICS
- DITCH FLOWLINE
- PROPOSED STORM SEWER
- EXISTING STORM SEWER
- DRAINAGE AREA BOUNDARY
- DRAINAGE FLOW DIRECTION
- XXX EXISTING CONTOUR
- XXX PROPOSED CONTOUR
- XX / XX.X DRAINAGE AREA ID / DRAINAGE AREA (ACRES)

NOTES:

1. SEE HYDROLOGIC CALCULATION SHEETS FOR DRAINAGE AREA CALCULATIONS.
2. DISCHARGE CALCULATED USING DATA FROM RANCH AT DEER CREEK PHASE 1 SECTION 1-1 AS BUILT DRAWINGS.
3. DISCHARGE CALCULATED USING DATA FROM RANCH AT CYPRESS CREEK SECTION 16-B AS BUILT DRAWINGS.
4. DISCHARGE CALCULATED USING DATA FROM RANCH AT CYPRESS CREEK SECTION 16-D AS BUILT DRAWINGS.

NUMBER	DATE	REVISION	APPROVED

STATE OF TEXAS
ELEANOR R. RIVERA
87879
LICENSED
PROFESSIONAL ENGINEER

Eleanor R. Rivera 9-28-2020

Binkley & Barfield, Inc
consulting engineers
Texas Registration Number F-257

CEDAR PARK

ANDERSON MILL ROAD
DRAINAGE AREA MAP
BEGIN - STA 35+00

DESIGN BY:	GCC	SCALE:	1"=200'
DRAWN BY:	DSH		
CHECKED BY:	BMB		
APPROVED BY:	BDR	SHEET:	1 OF 3
PROJECT NO:	156402		
DATE:	9/28/2020	PAGE:	88

9/28/2020
1:20:35 PM
T:\156402*Anderson*Mill*Road\CADD\SHEETS\DRAM1*Drainage*Area*Map*01.dgn

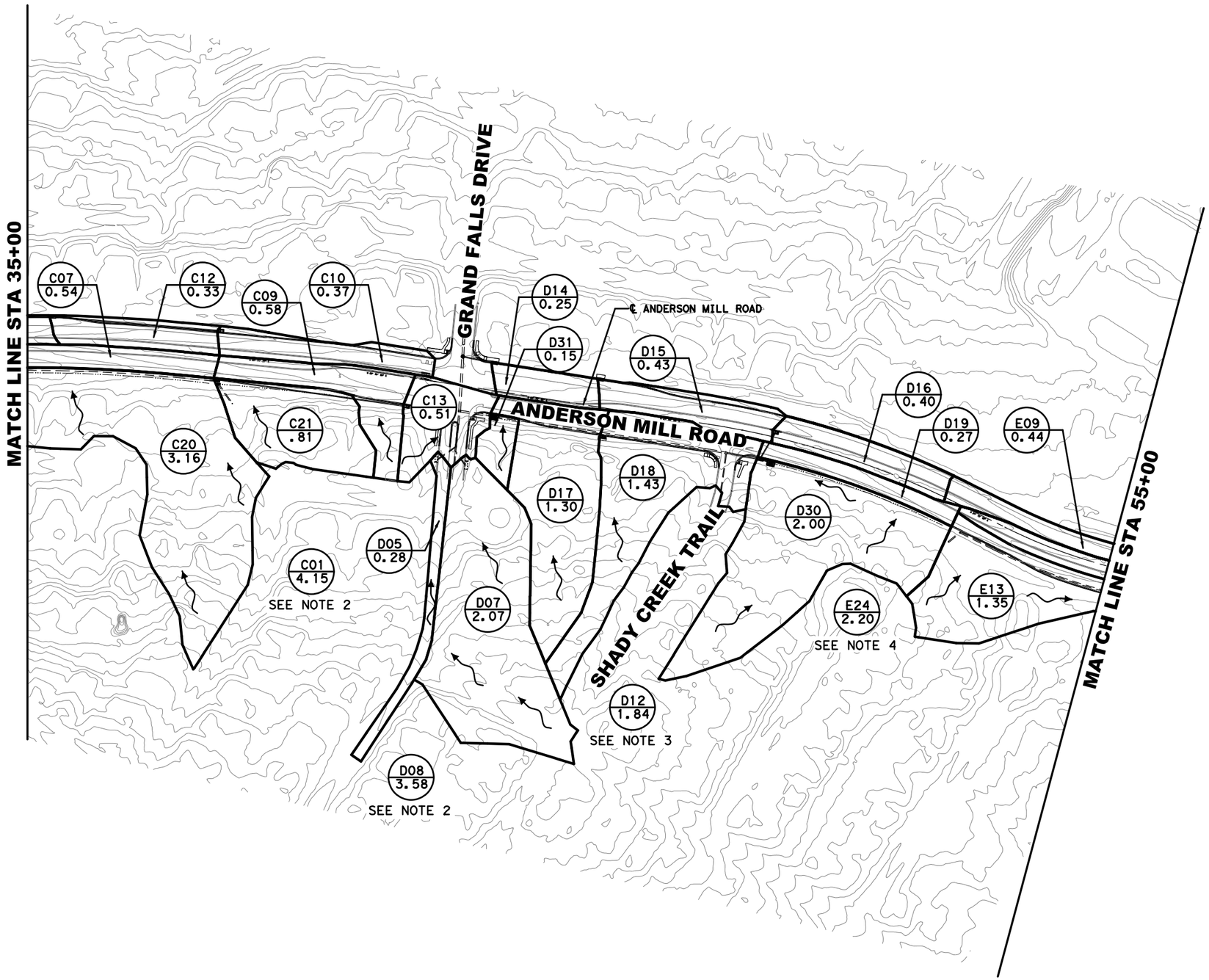

0' 50' 100' 200'
SCALE: 1"=200'

LEGEND

- EXISTING PLANIMETRICS
- DITCH FLOWLINE
- PROPOSED STORM SEWER
- EXISTING STORM SEWER
- DRAINAGE AREA BOUNDARY
- DRAINAGE FLOW DIRECTION
- XXX EXISTING CONTOUR
- XXX PROPOSED CONTOUR
- XX / XX.X DRAINAGE AREA ID / DRAINAGE AREA (ACRES)

NOTES:

1. SEE HYDROLOGIC CALCULATION SHEETS FOR DRAINAGE AREA CALCULATIONS.
2. DISCHARGE CALCULATED USING DATA FROM RANCH AT DEER CREEK PHASE 1 SECTION 1-2 AS BUILT DRAWINGS.
3. DISCHARGE CALCULATED USING DATA FROM RANCH AT CYPRESS CREEK SECTION 16-B AS BUILT DRAWINGS.
4. DISCHARGE CALCULATED USING DATA FROM RANCH AT CYPRESS CREEK SECTION 16-D AS BUILT DRAWINGS.

NUMBER	DATE	REVISION	APPROVED

STATE OF TEXAS
ELEANOR R. RIVERA
87879
LICENSED
PROFESSIONAL ENGINEER

Eleanor R. Rivera 9-28-2020

Binkley & Barfield, Inc
consulting engineers
Texas Registration Number F-257

CEDAR PARK

ANDERSON MILL ROAD
DRAINAGE AREA MAP
STA 35+00 - STA 55+00

DESIGN BY:	GCC	SCALE:	1"=200'
DRAWN BY:	DSH		
CHECKED BY:	BMB	SHEET:	2 OF 3
APPROVED BY:	BDR		
PROJECT NO:	156402	PAGE:	89
DATE:	9/28/2020		

9/28/2020
1:20:41 PM
T:\156402*AndersonMill*Road\CADD\SHEETS\DRAM1*Drainage*Area*Map*02.dgn

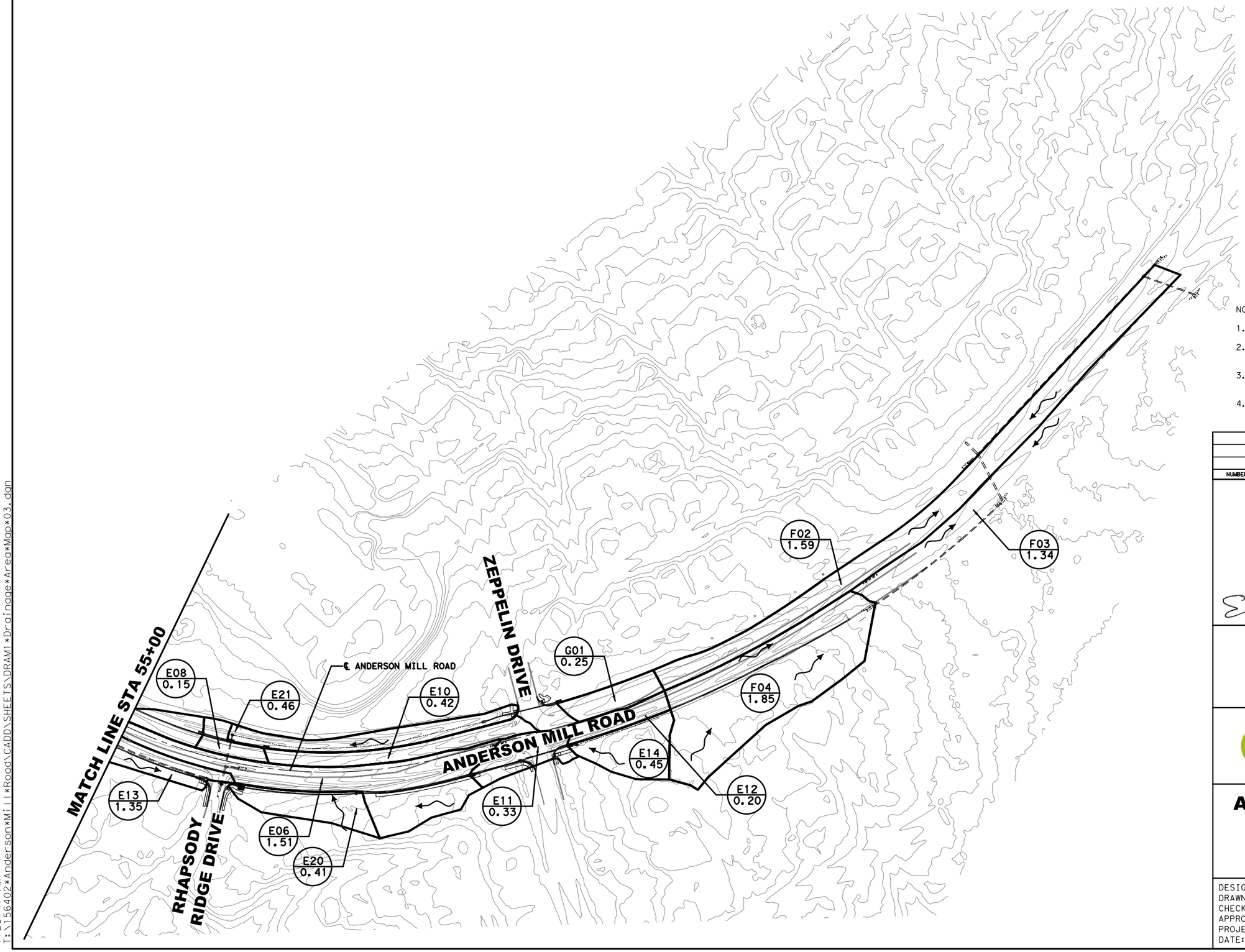

0' 50' 100' 200'

SCALE: 1"=200'

LEGEND

- EXISTING PLANIMETRICS
- DITCH FLOWLINE
- PROPOSED STORM SEWER
- EXISTING STORM SEWER
- DRAINAGE AREA BOUNDARY
- DRAINAGE FLOW DIRECTION
- XXX EXISTING CONTOUR
- XXX PROPOSED CONTOUR
- XX / XX.X DRAINAGE AREA ID / DRAINAGE AREA (ACRES)

NOTES:

1. SEE HYDROLOGIC CALCULATION SHEETS FOR DRAINAGE AREA CALCULATIONS.
2. DISCHARGE CALCULATED USING DATA FROM RANCH AT DEER CREEK PHASE 1 SECTION 1-1 AS BUILT DRAWINGS.
3. DISCHARGE CALCULATED USING DATA FROM RANCH AT CYPRESS CREEK SECTION 16-B AS BUILT DRAWINGS.
4. DISCHARGE CALCULATED USING DATA FROM RANCH AT CYPRESS CREEK SECTION 16-D AS BUILT DRAWINGS.

NUMBER	DATE	REVISION	APPROVED

STATE OF TEXAS
ELEANOR R. RIVERA
87879
LICENSED
PROFESSIONAL ENGINEER

Eleanor R. Rivera 9-28-2020

Binkley & Barfield, Inc
consulting engineers
Texas Registration Number F-257

CEDAR PARK

ANDERSON MILL ROAD
DRAINAGE AREA MAP
STA 55+00 - END

DESIGN BY:	GCC	SCALE:	1"=200'
DRAWN BY:	DSH		
CHECKED BY:	BMB		
APPROVED BY:	BDR	SHEET:	3 OF 3
PROJECT NO:	156402		
DATE:	9/28/2020	PAGE:	90

9/28/2020
1:20:47 PM
T:\156402*Anderson*Mill*Road\CADD\SHEETS\DRAM1*Drainage*Area*Map*03.dgn

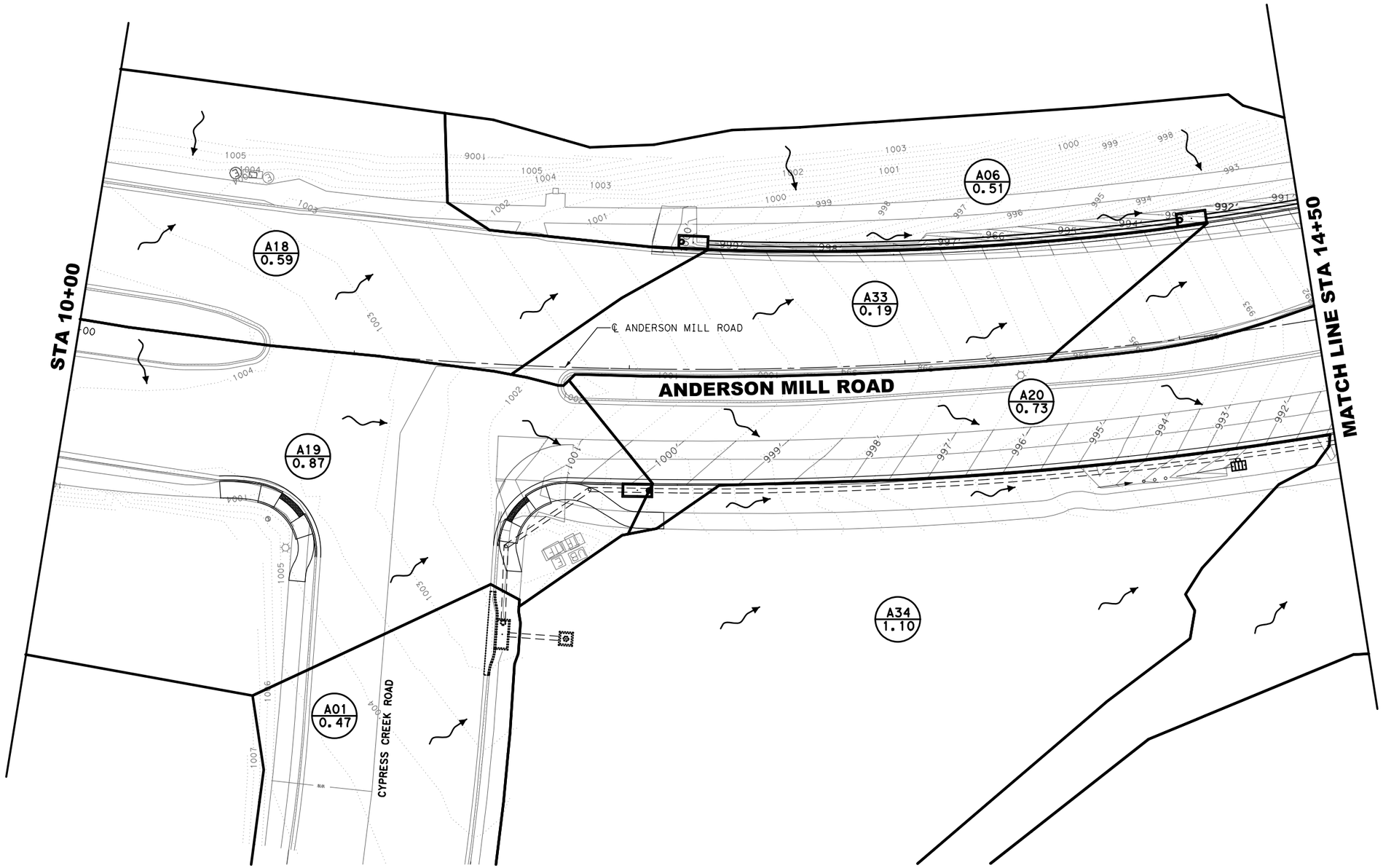

0′ 10′ 20′ 40′

SCALE: 1"=40′

LEGEND

- EXISTING PLANIMETRICS
- DITCH FLOWLINE
- PROPOSED STORM SEWER
- EXISTING STORM SEWER
- DRAINAGE AREA BOUNDARY
- DRAINAGE FLOW DIRECTION
- XXX EXISTING CONTOUR
- XXX PROPOSED CONTOUR
- XX / XX.X DRAINAGE AREA ID / DRAINAGE AREA (ACRES)

NOTES:

1. SEE HYDROLOGIC CALCULATION SHEETS FOR DRAINAGE AREA CALCULATIONS.

NUMBER	DATE	REVISION	APPROVED

STATE OF TEXAS
ELEANOR R. RIVERA
87879
LICENSED
PROFESSIONAL ENGINEER

Eleanor R. Rivera 9-28-2020

Binkley & Barfield, Inc
consulting engineers
Texas Registration Number F-257

CEDAR PARK

ANDERSON MILL ROAD
DRAINAGE AREAS
STA 10+00 - STA 14+50

DESIGN BY:	GCC	SCALE:	1"=40′
DRAWN BY:	DSH		
CHECKED BY:	BMB		
APPROVED BY:	BDR	SHEET:	1 OF 14
PROJECT NO:	156402		
DATE:	9/28/2020	PAGE:	91

9/28/2020
1:20:52 PM
T:\156402*AndersonMill*Road\CADD\SHEETS\DRDA1*Drainage*Area*001.dgn

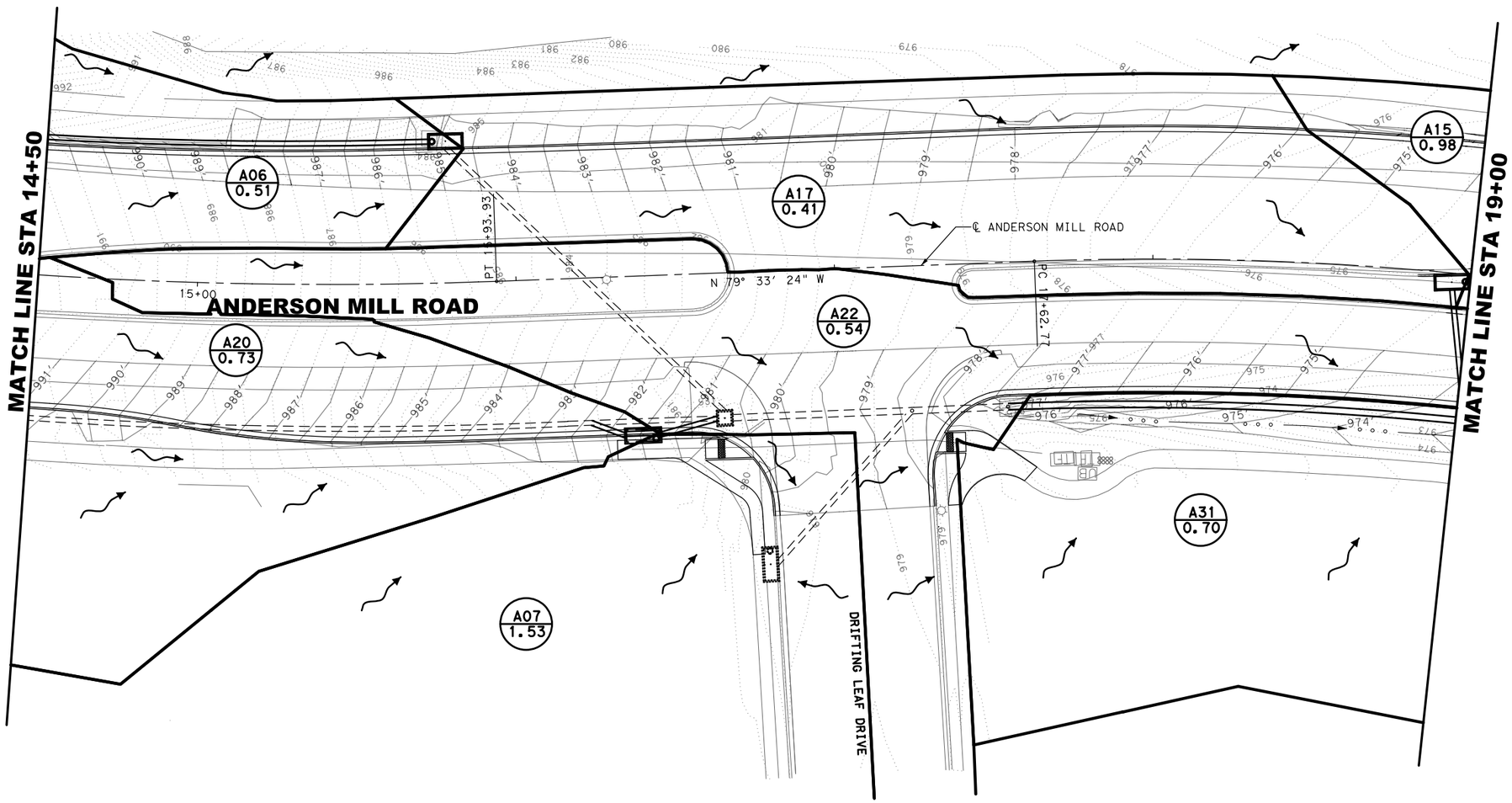

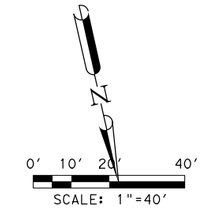

LEGEND

- EXISTING PLANIMETRICS
- DITCH FLOWLINE
- PROPOSED STORM SEWER
- EXISTING STORM SEWER
- DRAINAGE AREA BOUNDARY
- DRAINAGE FLOW DIRECTION
- XXX EXISTING CONTOUR
- XXX PROPOSED CONTOUR
- XX / XX.X DRAINAGE AREA ID / DRAINAGE AREA (ACRES)

NOTES:

1. SEE HYDROLOGIC CALCULATION SHEETS FOR DRAINAGE AREA CALCULATIONS.

NUMBER	DATE	REVISION	APPROVED

STATE OF TEXAS
ELEANOR R. RIVERA
87879
LICENSED
PROFESSIONAL ENGINEER

Eleanor R. Rivera 9-28-2020

Binkley & Barfield, Inc
consulting engineers
Texas Registration Number F-257

CEDAR PARK

ANDERSON MILL ROAD
DRAINAGE AREAS
STA 14+50 - STA 19+00

DESIGN BY:	GCC	SCALE:	1"=40'
DRAWN BY:	DSH		
CHECKED BY:	BMB	SHEET:	2 OF 14
APPROVED BY:	BDR		
PROJECT NO:	156402	PAGE:	92
DATE:	9/28/2020		

9/28/2020
1:20:57 PM
T:\156402*AndersonMill*Road\CADD\SHEETS\DRDA1*Drainage*Area*002.dgn

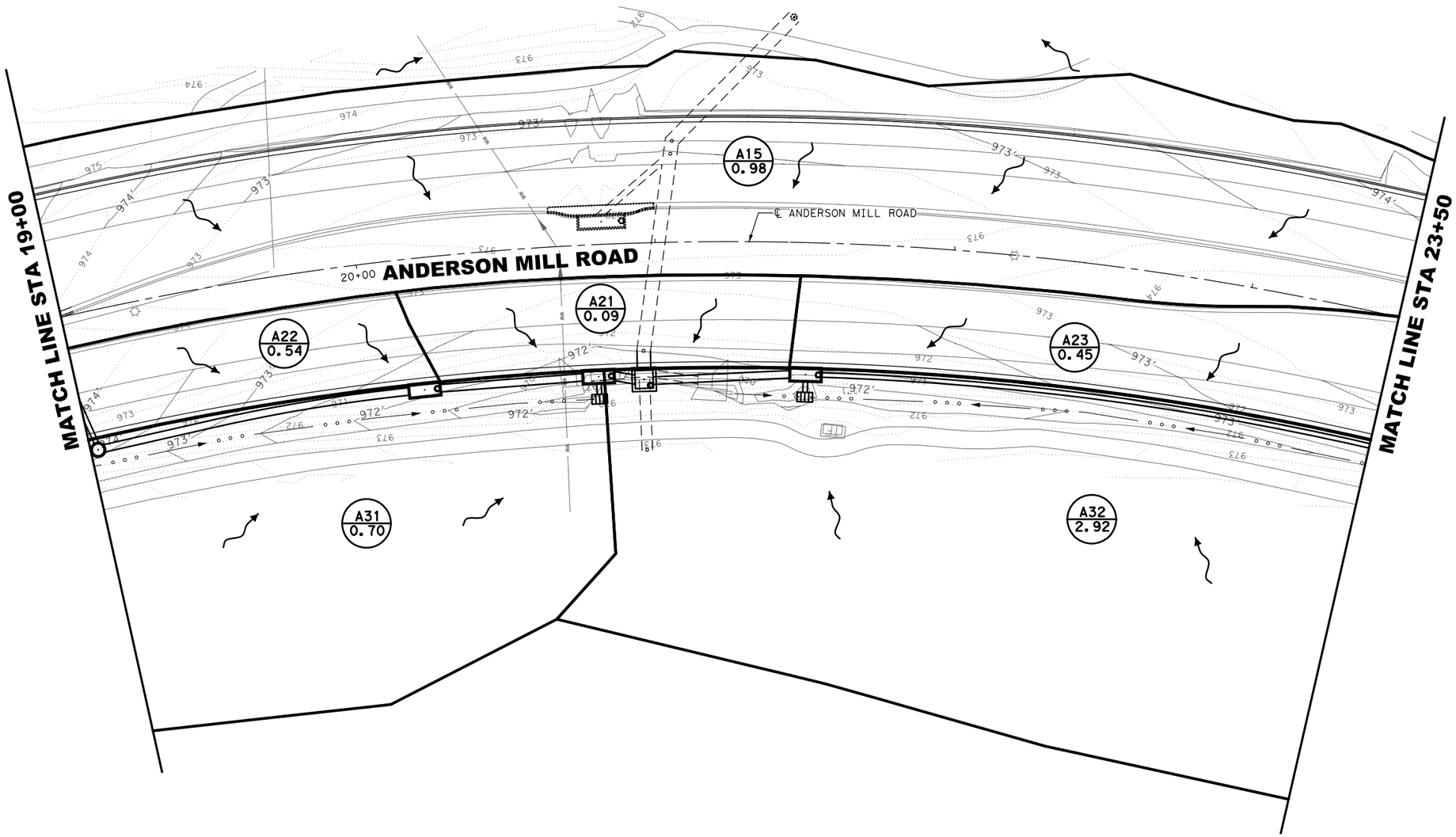

N

0′ 10′ 20′ 40′

SCALE: 1"=40′

LEGEND

- EXISTING PLANIMETRICS
- DITCH FLOWLINE
- PROPOSED STORM SEWER
- EXISTING STORM SEWER
- DRAINAGE AREA BOUNDARY
- DRAINAGE FLOW DIRECTION
- XXX EXISTING CONTOUR
- XXX PROPOSED CONTOUR
- XX / XX.X DRAINAGE AREA ID / DRAINAGE AREA (ACRES)

NOTES:

1. SEE HYDROLOGIC CALCULATION SHEETS FOR DRAINAGE AREA CALCULATIONS.

NUMBER	DATE	REVISION	APPROVED

STATE OF TEXAS
ELEANOR R. RIVERA
87879
LICENSED
PROFESSIONAL ENGINEER

Eleanor R. Rivera 9-28-2020

Binkley & Barfield, Inc
consulting engineers
Texas Registration Number F-257

CEDAR PARK

ANDERSON MILL ROAD
DRAINAGE AREAS
STA 19+00 - STA 23+50

DESIGN BY:	GCC	SCALE:	1"=40′
DRAWN BY:	DSH		
CHECKED BY:	BMB	SHEET:	3 OF 14
APPROVED BY:	BDR		
PROJECT NO:	156402	PAGE:	93
DATE:	9/28/2020		

9/28/2020
1:21:01 PM
T:\156402*Anderson*Mill*Road\CADD\SHEETS\DRDA1*Drainage*Area*003.dgn

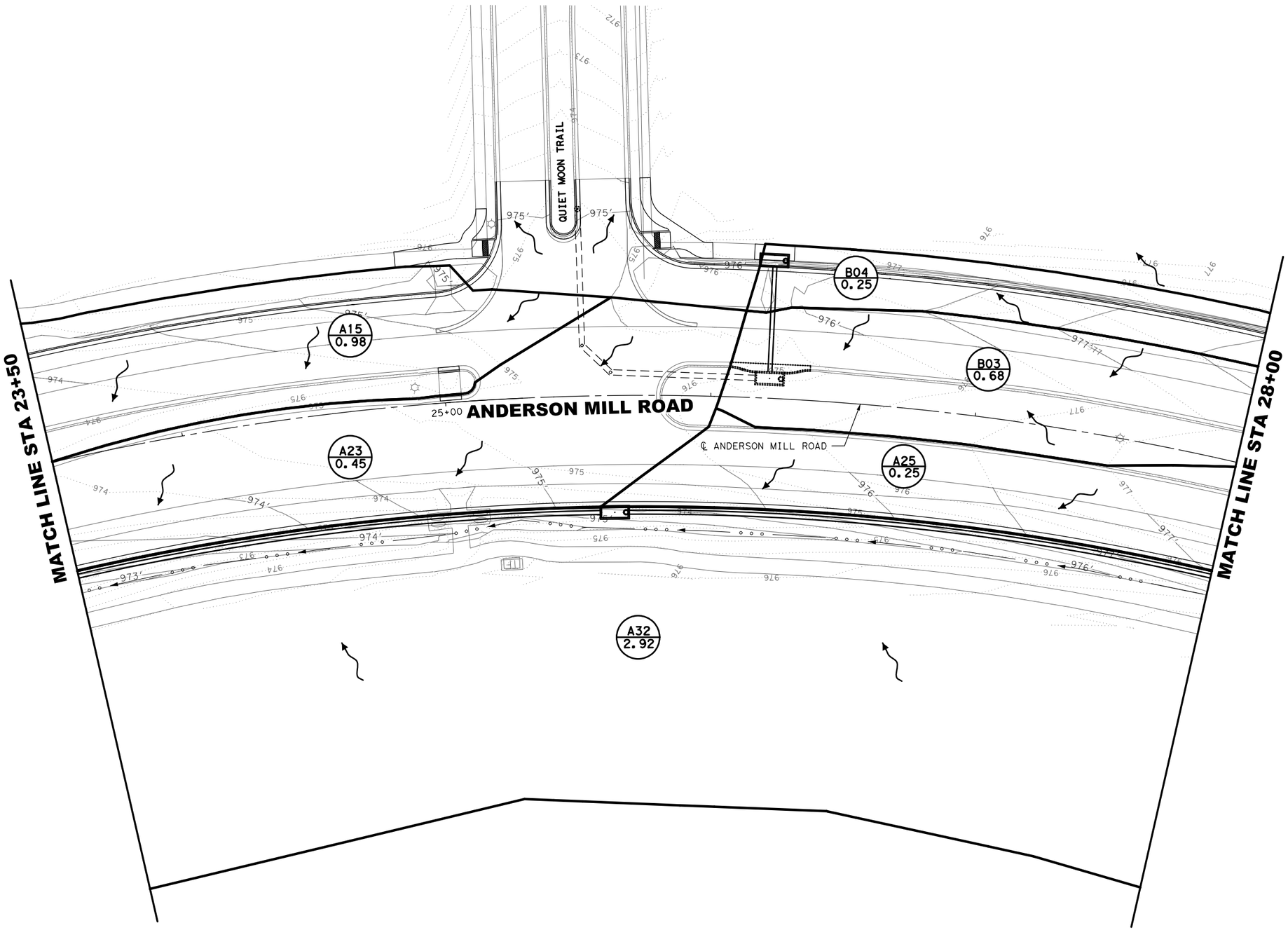

0′ 10′ 20′ 40′
SCALE: 1"=40′

LEGEND

- EXISTING PLANIMETRICS
- DITCH FLOWLINE
- PROPOSED STORM SEWER
- EXISTING STORM SEWER
- DRAINAGE AREA BOUNDARY
- DRAINAGE FLOW DIRECTION
- XXX EXISTING CONTOUR
- XXX PROPOSED CONTOUR
- XX / XX.X DRAINAGE AREA ID / DRAINAGE AREA (ACRES)

NOTES:

1. SEE HYDROLOGIC CALCULATION SHEETS FOR DRAINAGE AREA CALCULATIONS.

NUMBER	DATE	REVISION	APPROVED

STATE OF TEXAS
ELEANOR R. RIVERA
87879
LICENSED
PROFESSIONAL ENGINEER

Eleanor R. Rivera 9-28-2020

Binkley & Barfield, Inc
consulting engineers
Texas Registration Number F-257

CEDAR PARK

ANDERSON MILL ROAD
DRAINAGE AREAS
STA 23+50 - STA 28+00

DESIGN BY:	GCC	SCALE:	1"=40′
DRAWN BY:	DSH		
CHECKED BY:	BMB	SHEET:	4 OF 14
APPROVED BY:	BDR		
PROJECT NO:	156402	PAGE:	94
DATE:	9/28/2020		

9/28/2020
1:21:04 PM
T:\156402*Anderson*Mill*Road\CADD\SHEETS\DRDA1*Drainage*Area*004.dgn

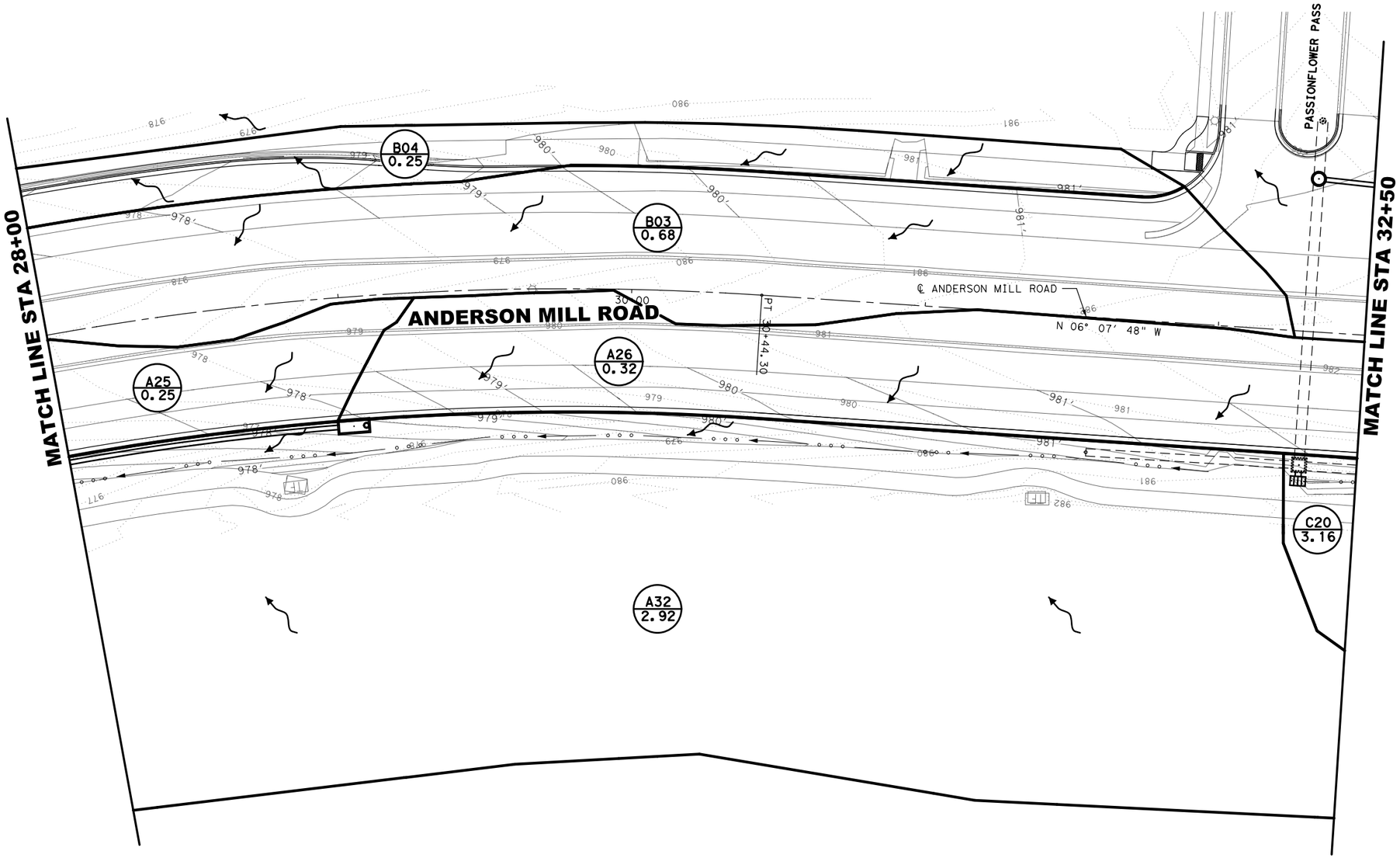

0' 10' 20' 40'

SCALE: 1"=40'

LEGEND

- EXISTING PLANIMETRICS
- DITCH FLOWLINE
- PROPOSED STORM SEWER
- EXISTING STORM SEWER
- DRAINAGE AREA BOUNDARY
- DRAINAGE FLOW DIRECTION
- XXX EXISTING CONTOUR
- XXX PROPOSED CONTOUR
- XX / XX.X — DRAINAGE AREA ID / DRAINAGE AREA (ACRES)

NOTES:

1. SEE HYDROLOGIC CALCULATION SHEETS FOR DRAINAGE AREA CALCULATIONS.

NUMBER	DATE	REVISION	APPROVED

STATE OF TEXAS
ELEANOR R. RIVERA
87879
LICENSED
PROFESSIONAL ENGINEER

Eleanor R. Rivera 9-28-2020

Binkley & Barfield, Inc
consulting engineers
Texas Registration Number F-257

CEDAR PARK

ANDERSON MILL ROAD
DRAINAGE AREAS
STA 28+00 - STA 32+50

DESIGN BY:	GCC	SCALE:	1"=40'
DRAWN BY:	DSH		
CHECKED BY:	BMB		
APPROVED BY:	BDR	SHEET:	5 OF 14
PROJECT NO:	156402		
DATE:	9/28/2020	PAGE:	95

9/28/2020
1:21:08 PM
I:\156402*Anderson*Mill*Road\CADD\SHEETS\DRDA1*Drainage*Area*005.dgn

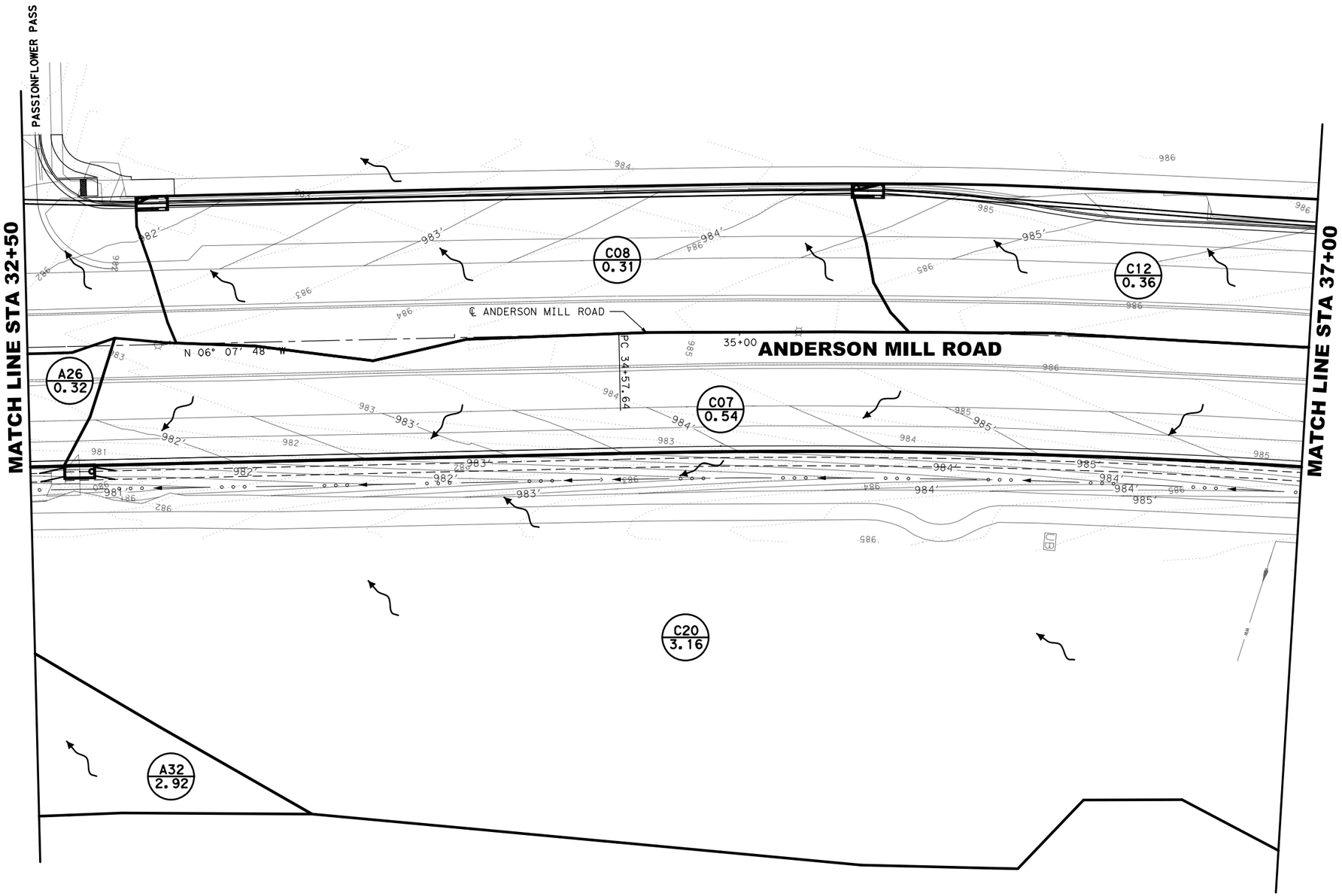

0' 10' 20' 40'

SCALE: 1"=40'

LEGEND

- EXISTING PLANIMETRICS
- DITCH FLOWLINE
- PROPOSED STORM SEWER
- EXISTING STORM SEWER
- DRAINAGE AREA BOUNDARY
- DRAINAGE FLOW DIRECTION
- XXX EXISTING CONTOUR
- XXX PROPOSED CONTOUR
- XX / XX.X DRAINAGE AREA ID / DRAINAGE AREA (ACRES)

NOTES:

1. SEE HYDROLOGIC CALCULATION SHEETS FOR DRAINAGE AREA CALCULATIONS.

NUMBER	DATE	REVISION	APPROVED

STATE OF TEXAS
ELEANOR R. RIVERA
87879
LICENSED
PROFESSIONAL ENGINEER

Eleanor R. Rivera 9-28-2020

Binkley & Barfield, Inc
consulting engineers
Texas Registration Number F-257

CEDAR PARK

ANDERSON MILL ROAD
DRAINAGE AREAS
STA 32+50 - STA 37+00

DESIGN BY:	GCC	SCALE:	1"=40'
DRAWN BY:	DSH		
CHECKED BY:	BMB		
APPROVED BY:	BDR	SHEET:	6 OF 14
PROJECT NO:	156402		
DATE:	9/28/2020	PAGE:	96

9/28/2020
1:21:12 PM
T:\156402*Anderson*Mill*Road\CADD\SHEETS\DRDA1*Drainage*Area*006.dgn

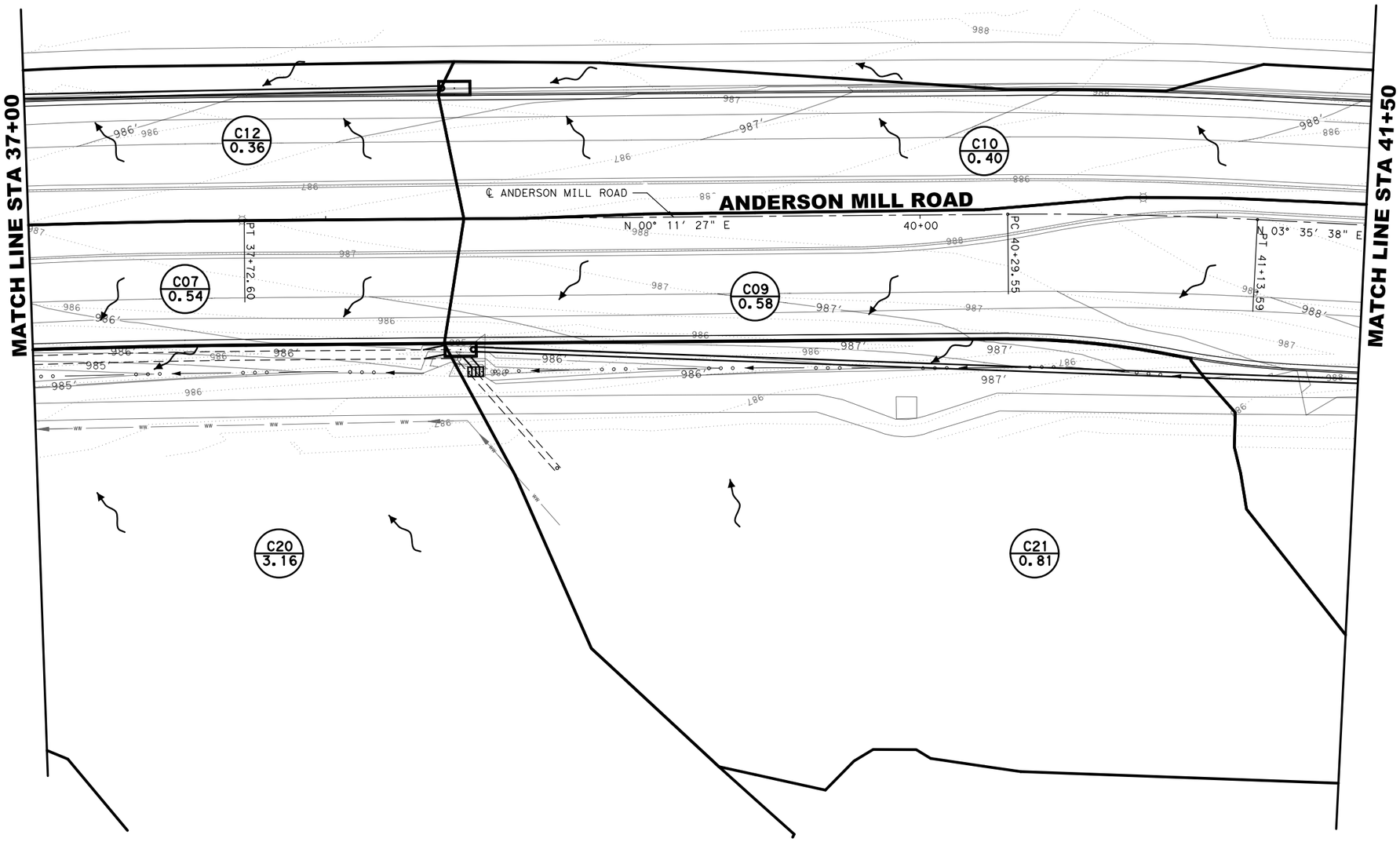

0' 10' 20' 40'
SCALE: 1"=40'

LEGEND

- EXISTING PLANIMETRICS
- DITCH FLOWLINE
- PROPOSED STORM SEWER
- EXISTING STORM SEWER
- DRAINAGE AREA BOUNDARY
- DRAINAGE FLOW DIRECTION
- XXX EXISTING CONTOUR
- XXX PROPOSED CONTOUR
- XX / XX.X DRAINAGE AREA ID / DRAINAGE AREA (ACRES)

NOTES:

1. SEE HYDROLOGIC CALCULATION SHEETS FOR DRAINAGE AREA CALCULATIONS.

NUMBER	DATE	REVISION	APPROVED

STATE OF TEXAS
ELEANOR R. RIVERA
87879
LICENSED
PROFESSIONAL ENGINEER

Eleanor R. Rivera 9-28-2020

Binkley & Barfield, Inc
consulting engineers
Texas Registration Number F-257

CEDAR PARK

ANDERSON MILL ROAD
DRAINAGE AREAS
STA 37+00 - STA 41+50

DESIGN BY:	GCC	SCALE:	1"=40'
DRAWN BY:	DSH		
CHECKED BY:	BMB	SHEET:	7 OF 14
APPROVED BY:	BDR		
PROJECT NO:	156402	PAGE:	97
DATE:	9/28/2020		

9/28/2020
1:21:19 PM
I:\156402*Anderson*Mill*Road\CADD\SHEETS\DRDA1*Drainage*Area*007.dgn

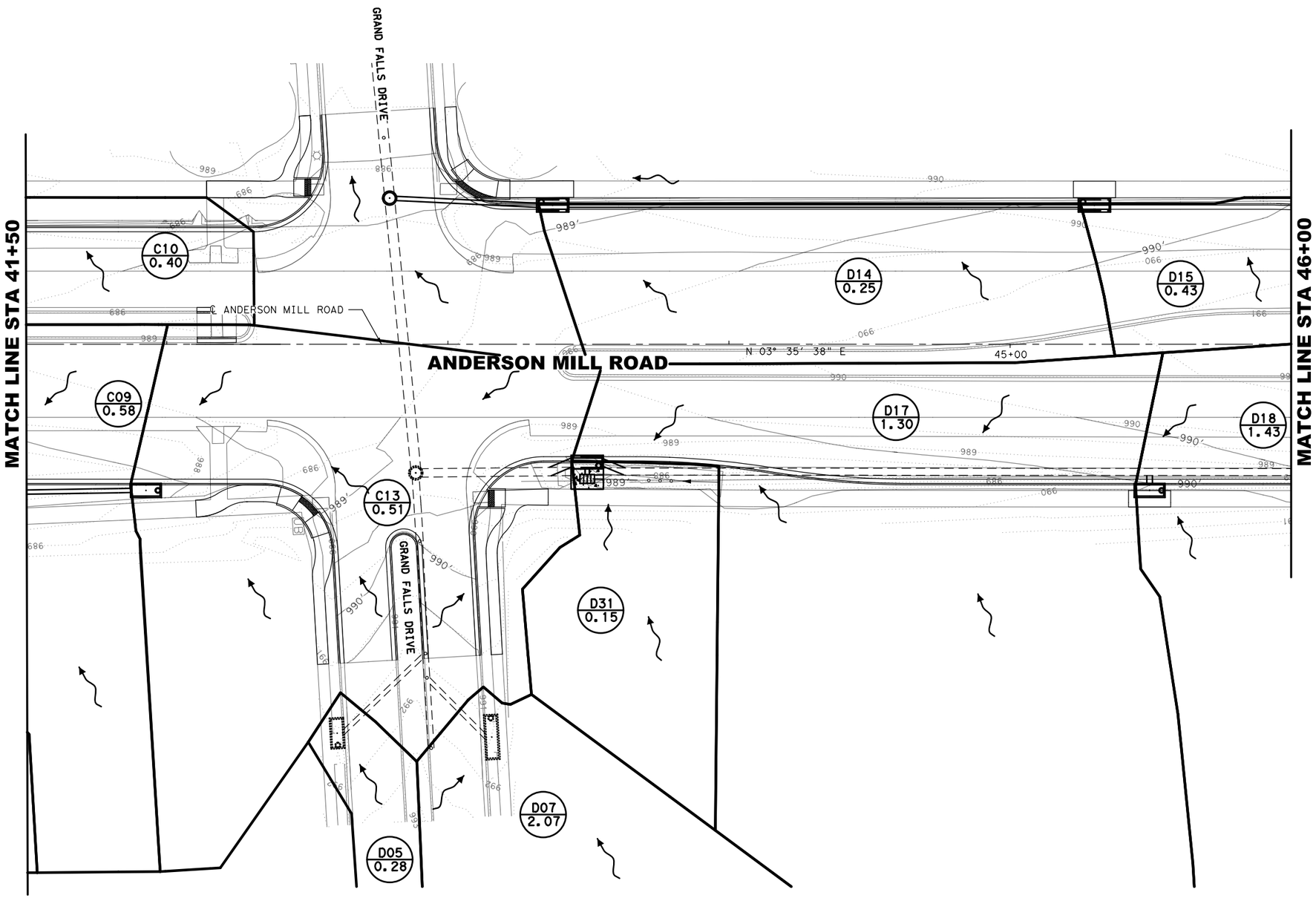

0' 10' 20' 40'
SCALE: 1"=40'

LEGEND

- EXISTING PLANIMETRICS
- DITCH FLOWLINE
- PROPOSED STORM SEWER
- EXISTING STORM SEWER
- DRAINAGE AREA BOUNDARY
- DRAINAGE FLOW DIRECTION
- XXX EXISTING CONTOUR
- XXX PROPOSED CONTOUR
- XX / XX.X DRAINAGE AREA ID / DRAINAGE AREA (ACRES)

NOTES:

1. SEE HYDROLOGIC CALCULATION SHEETS FOR DRAINAGE AREA CALCULATIONS.

NUMBER	DATE	REVISION	APPROVED

STATE OF TEXAS
ELEANOR R. RIVERA
87879
LICENSED
PROFESSIONAL ENGINEER

Eleanor R. Rivera 9-28-2020

Binkley & Barfield, Inc
consulting engineers
Texas Registration Number F-257

CEDAR PARK

ANDERSON MILL ROAD
DRAINAGE AREAS
STA 41+50 - STA 46+00

DESIGN BY:	GCC	SCALE:	1"=40'
DRAWN BY:	DSH		
CHECKED BY:	BMB		
APPROVED BY:	BDR	SHEET:	8 OF 14
PROJECT NO:	156402		
DATE:	9/28/2020	PAGE:	98

9/28/2020
1:21:23 PM
T:\156402*Andersonmill*Road\CADD\SHEETS\DRDA1*Drainage*Area*008.dgn

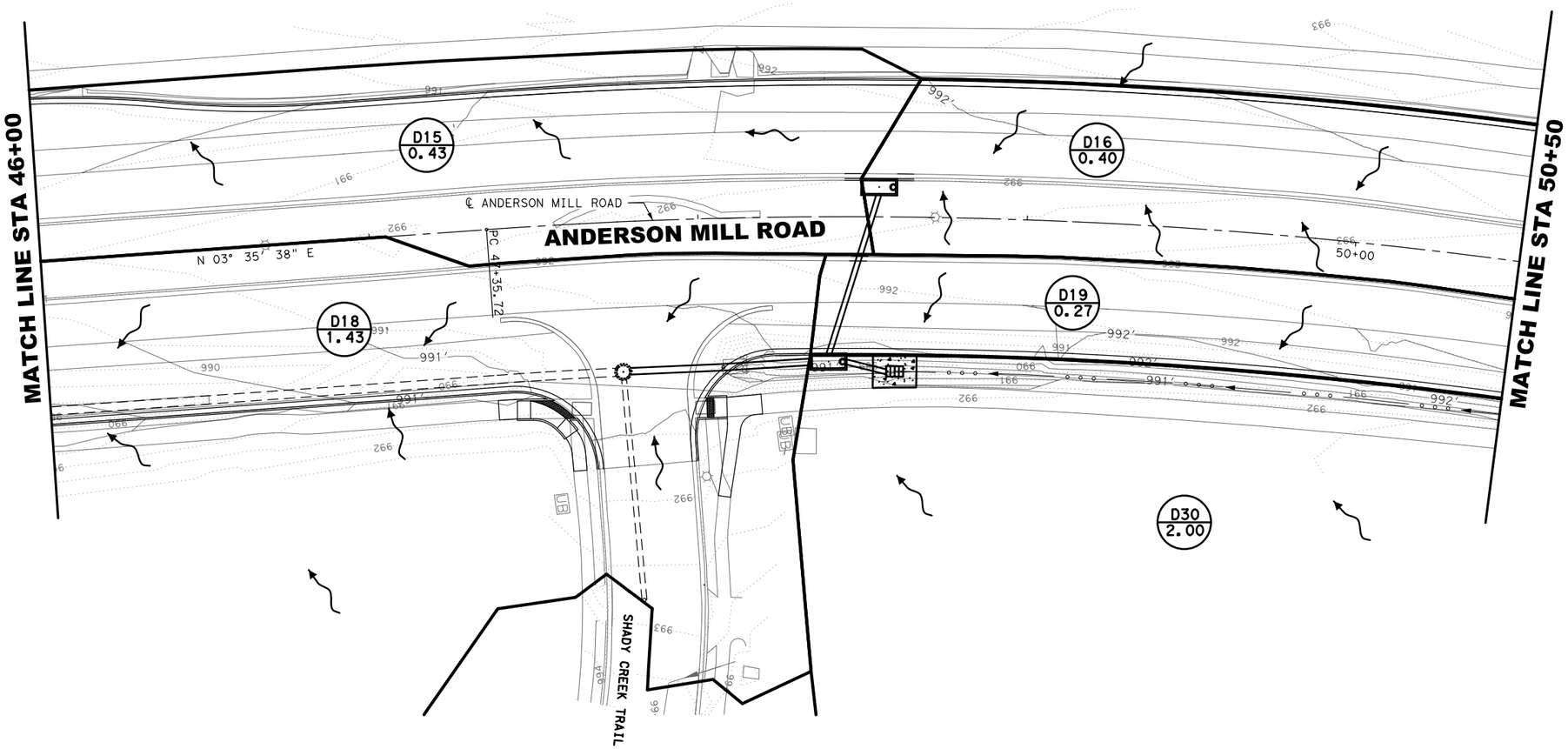

0' 10' 20' 40'

SCALE: 1"=40'

LEGEND

- EXISTING PLANIMETRICS
- DITCH FLOWLINE
- PROPOSED STORM SEWER
- EXISTING STORM SEWER
- DRAINAGE AREA BOUNDARY
- DRAINAGE FLOW DIRECTION
- XXX EXISTING CONTOUR
- XXX PROPOSED CONTOUR
- XX / XX.X DRAINAGE AREA ID / DRAINAGE AREA (ACRES)

NOTES:

1. SEE HYDROLOGIC CALCULATION SHEETS FOR DRAINAGE AREA CALCULATIONS.

NUMBER	DATE	REVISION	APPROVED

STATE OF TEXAS
ELEANOR R. RIVERA
87879
LICENSED
PROFESSIONAL ENGINEER

Eleanor R. Rivera 9-28-2020

Binkley & Barfield, Inc
consulting engineers
Texas Registration Number F-257

CEDAR PARK

ANDERSON MILL ROAD
DRAINAGE AREAS
STA 46+00 - STA 50+50

DESIGN BY:	GCC	SCALE:	1"=40'
DRAWN BY:	DSH		
CHECKED BY:	BMB		
APPROVED BY:	BDR	SHEET:	9 OF 14
PROJECT NO:	156402		
DATE:	9/28/2020	PAGE:	99

9/28/2020
1:21:27 PM
T:\156402*AndersonMill*Road\CADD\SHEETS\DRDA1*Drainage*Area*009.dgn

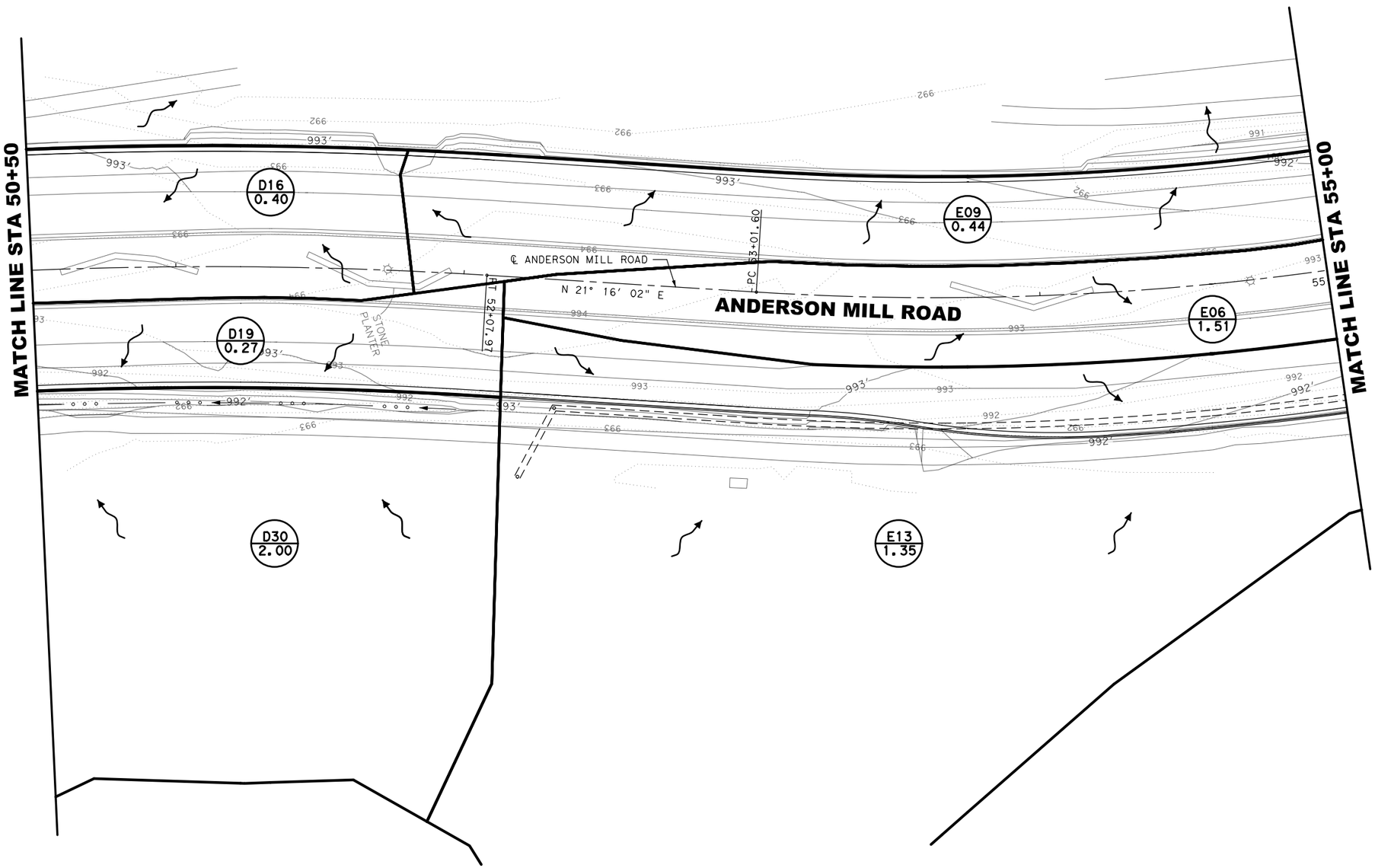

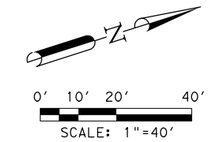

LEGEND

- EXISTING PLANIMETRICS
- DITCH FLOWLINE
- PROPOSED STORM SEWER
- EXISTING STORM SEWER
- DRAINAGE AREA BOUNDARY
- DRAINAGE FLOW DIRECTION
- XXX EXISTING CONTOUR
- XXX PROPOSED CONTOUR
- XX / XX.X DRAINAGE AREA ID / DRAINAGE AREA (ACRES)

NOTES:

1. SEE HYDROLOGIC CALCULATION SHEETS FOR DRAINAGE AREA CALCULATIONS.

NUMBER	DATE	REVISION	APPROVED

STATE OF TEXAS
ELEANOR R. RIVERA
87879
LICENSED
PROFESSIONAL ENGINEER

Eleanor R. Rivera 9-28-2020

Binkley & Barfield, Inc
consulting engineers
Texas Registration Number F-257

CEDAR PARK

ANDERSON MILL ROAD
DRAINAGE AREAS
STA 50+50 - STA 55+00

DESIGN BY:	GCC	SCALE:	1"=40'
DRAWN BY:	DSH		
CHECKED BY:	BMB	SHEET:	10 OF 14
APPROVED BY:	BDR		
PROJECT NO:	156402	PAGE:	100
DATE:	9/28/2020		

9/28/2020
1:21:31 PM
I:\156402*Anderson*Mill*Road\CADD\SHEETS\DRDA1*Drainage*Area*010.dgn

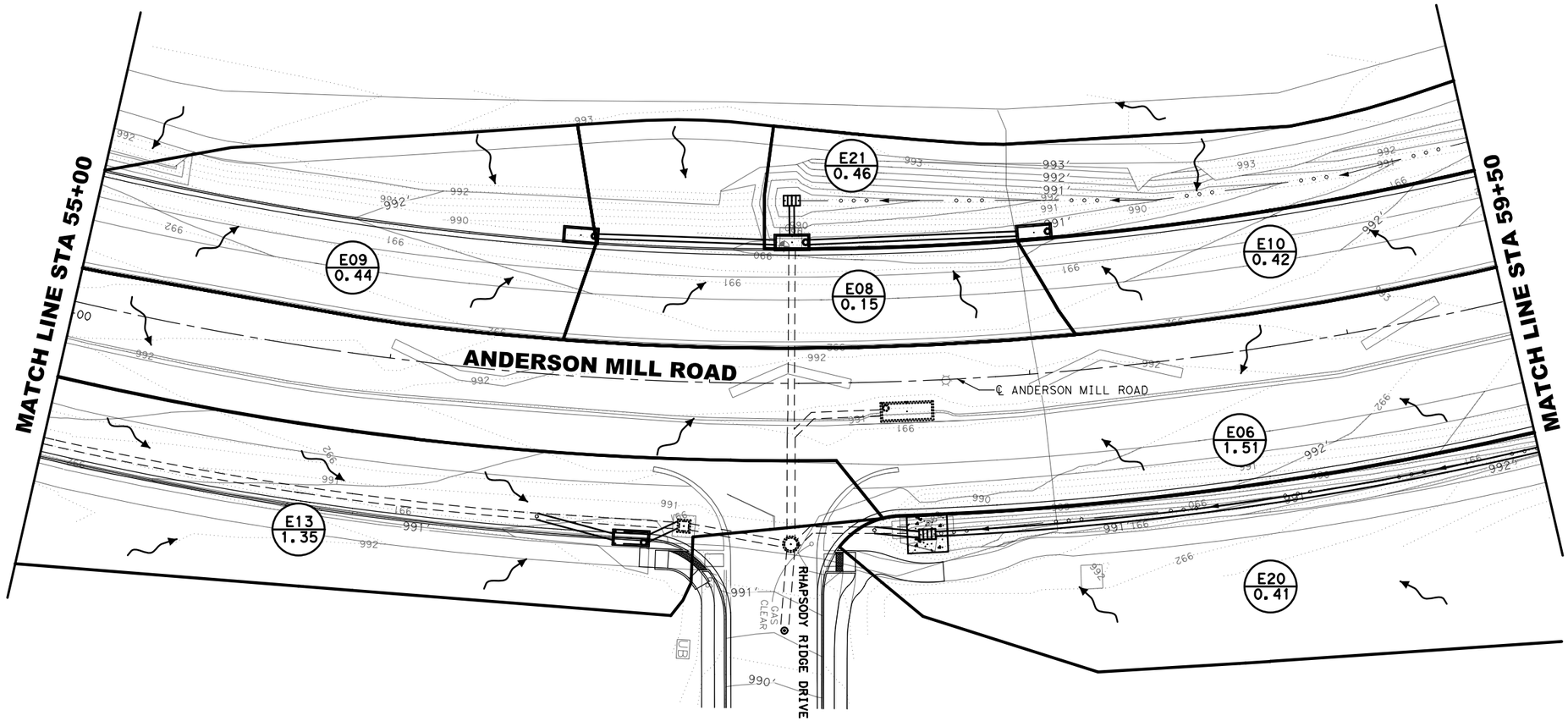

0′ 10′ 20′ 40′

SCALE: 1"=40′

LEGEND

- EXISTING PLANIMETRICS
- DITCH FLOWLINE
- PROPOSED STORM SEWER
- EXISTING STORM SEWER
- DRAINAGE AREA BOUNDARY
- DRAINAGE FLOW DIRECTION
- XXX EXISTING CONTOUR
- XXX PROPOSED CONTOUR
- XX / XX.X DRAINAGE AREA ID / DRAINAGE AREA (ACRES)

NOTES:

1. SEE HYDROLOGIC CALCULATION SHEETS FOR DRAINAGE AREA CALCULATIONS.

NUMBER	DATE	REVISION	APPROVED

STATE OF TEXAS
ELEANOR R. RIVERA
87879
LICENSED
PROFESSIONAL ENGINEER

Eleanor R. Rivera 9-28-2020

Binkley & Barfield, Inc
consulting engineers
Texas Registration Number F-257

CEDAR PARK

ANDERSON MILL ROAD
DRAINAGE AREAS
STA 55+00 - STA 59+50

DESIGN BY:	GCC	SCALE:	1"=40′
DRAWN BY:	DSH		
CHECKED BY:	BMB		
APPROVED BY:	BDR	SHEET:	11 OF 14
PROJECT NO:	156402		
DATE:	9/28/2020	PAGE:	101

9/28/2020
1:21:46 PM
T:\156402*Anderson*Mill*Road\CADD\SHEETS\DRDA1*Drainage*Area*011.dgn

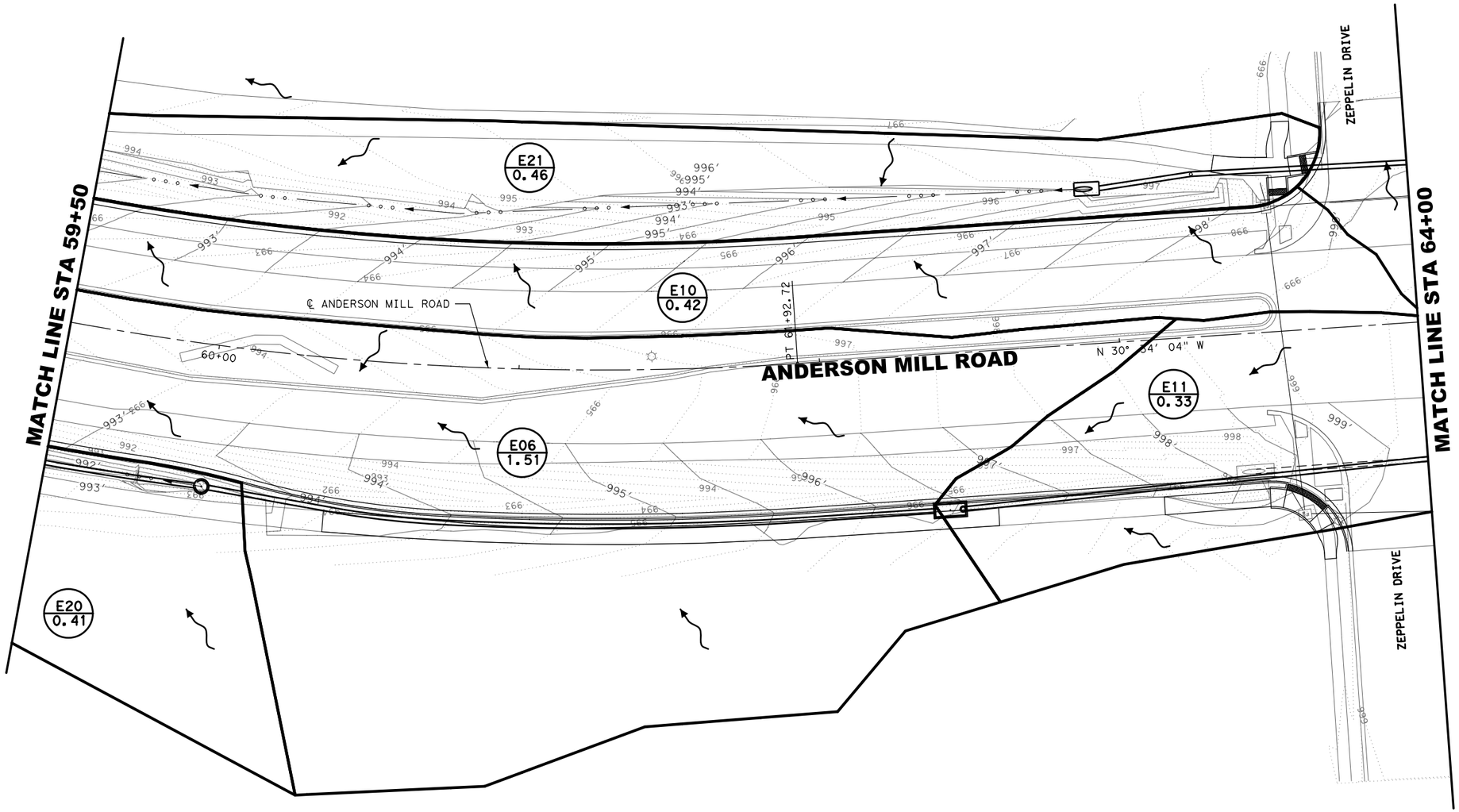

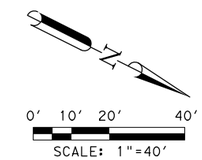

LEGEND

- EXISTING PLANIMETRICS
- DITCH FLOWLINE
- PROPOSED STORM SEWER
- EXISTING STORM SEWER
- DRAINAGE AREA BOUNDARY
- DRAINAGE FLOW DIRECTION
- XXX EXISTING CONTOUR
- XXX PROPOSED CONTOUR
- XX / XX.X DRAINAGE AREA ID / DRAINAGE AREA (ACRES)

NOTES:

1. SEE HYDROLOGIC CALCULATION SHEETS FOR DRAINAGE AREA CALCULATIONS.

NUMBER	DATE	REVISION	APPROVED

STATE OF TEXAS
ELEANOR R. RIVERA
87879
LICENSED
PROFESSIONAL ENGINEER

Eleanor R. Rivera 9-28-2020

Binkley & Barfield, Inc
consulting engineers
Texas Registration Number F-257

CEDAR PARK

ANDERSON MILL ROAD
DRAINAGE AREAS
STA 59+50 - STA 64+00

DESIGN BY:	GCC	SCALE:	1"=40'
DRAWN BY:	DSH		
CHECKED BY:	BMB	SHEET:	12 OF 14
APPROVED BY:	BDR		
PROJECT NO:	156402	PAGE:	102
DATE:	9/28/2020		

9/28/2020
1:21:49 PM
I:\156402*Anderson*Mill*Road\CADD\SHEETS\DRDA1*Drainage*Area*012.dgn

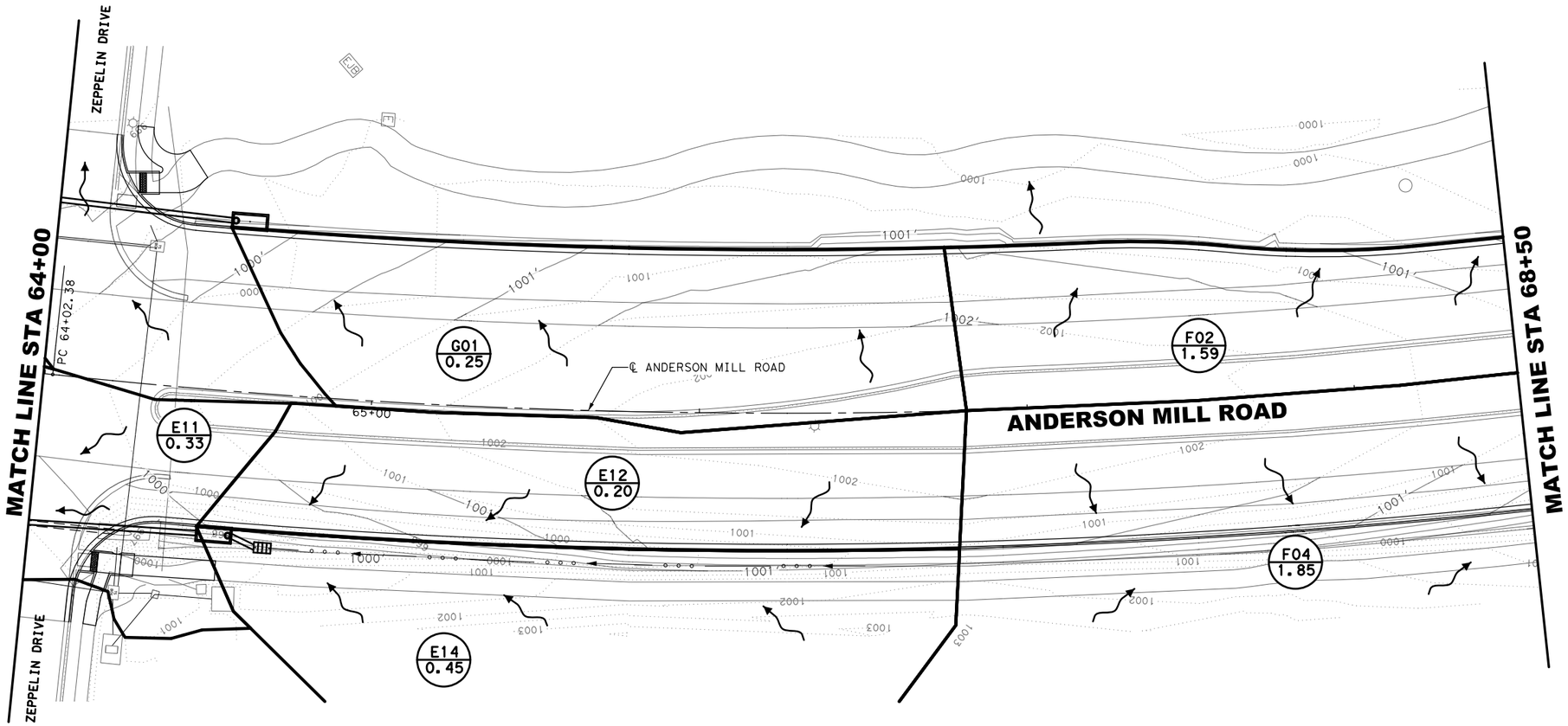

0′ 10′ 20′ 40′

SCALE: 1"=40′

LEGEND

- EXISTING PLANIMETRICS
- DITCH FLOWLINE
- PROPOSED STORM SEWER
- EXISTING STORM SEWER
- DRAINAGE AREA BOUNDARY
- DRAINAGE FLOW DIRECTION
- XXX EXISTING CONTOUR
- XXX PROPOSED CONTOUR
- XX / XX.X DRAINAGE AREA ID / DRAINAGE AREA (ACRES)

NOTES:

1. SEE HYDROLOGIC CALCULATION SHEETS FOR DRAINAGE AREA CALCULATIONS.

NUMBER	DATE	REVISION	APPROVED

STATE OF TEXAS
ELEANOR R. RIVERA
87879
LICENSED
PROFESSIONAL ENGINEER

Eleanor R. Rivera 9-28-2020

Binkley & Barfield, Inc
consulting engineers
Texas Registration Number F-257

CEDAR PARK

ANDERSON MILL ROAD
DRAINAGE AREAS
STA 64+00 - STA 68+50

DESIGN BY:	GCC	SCALE:	1"=40′
DRAWN BY:	DSH		
CHECKED BY:	BMB	SHEET:	13 OF 14
APPROVED BY:	BDR		
PROJECT NO:	156402	PAGE:	103
DATE:	9/28/2020		

9/28/2020
1:21:53 PM
I:\156402*Anderson*Mill*Road\CADD\SHEETS\DRDA1*Drainage*Area*013.dgn

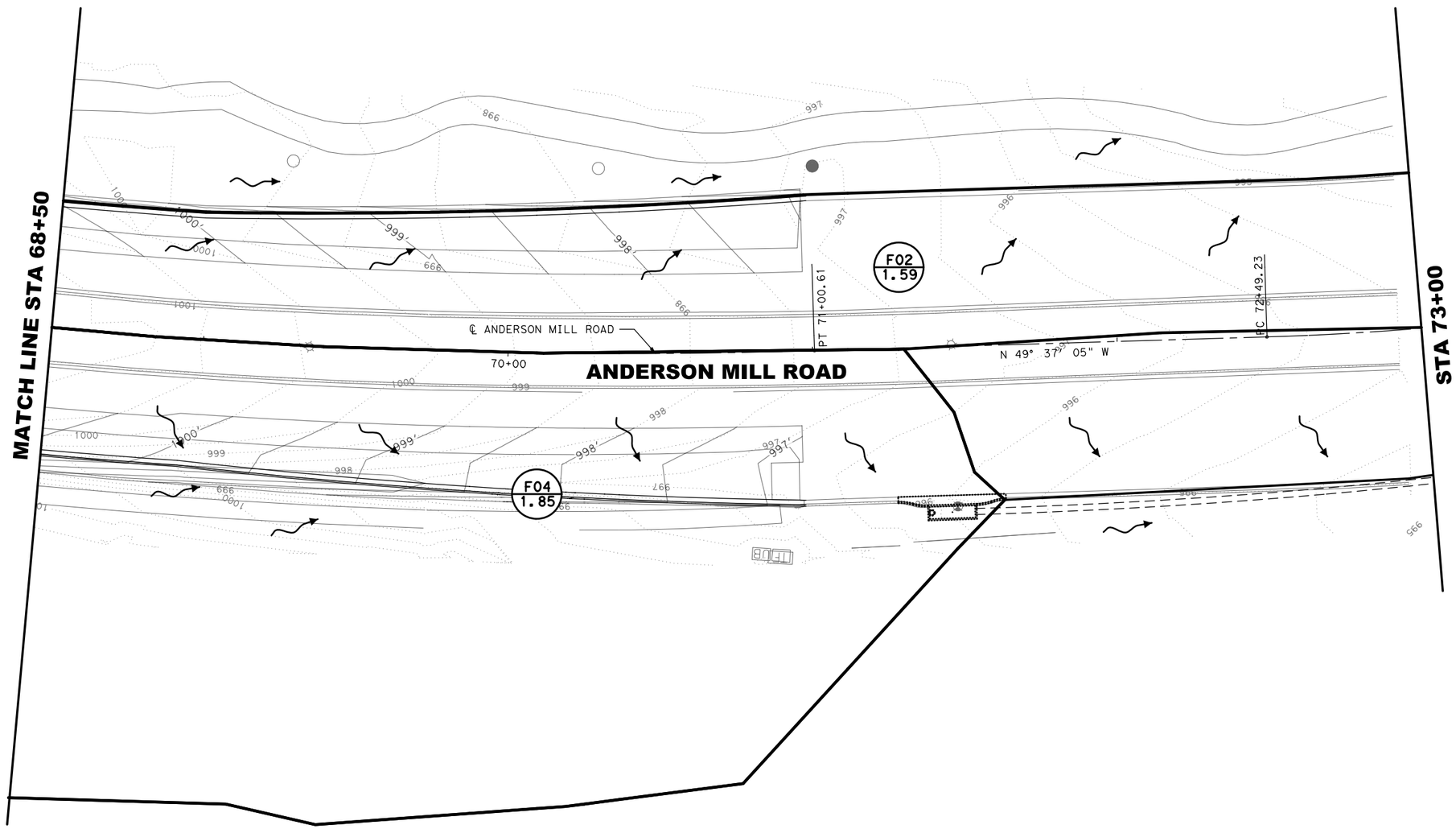

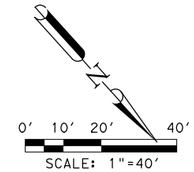

LEGEND

- EXISTING PLANIMETRICS
- DITCH FLOWLINE
- PROPOSED STORM SEWER
- EXISTING STORM SEWER
- DRAINAGE AREA BOUNDARY
- DRAINAGE FLOW DIRECTION
- XXX EXISTING CONTOUR
- XXX PROPOSED CONTOUR
- XX / XX.X DRAINAGE AREA ID / DRAINAGE AREA (ACRES)

NOTES:

1. SEE HYDROLOGIC CALCULATION SHEETS FOR DRAINAGE AREA CALCULATIONS.

NUMBER	DATE	REVISION	APPROVED

STATE OF TEXAS
ELEANOR R. RIVERA
87879
LICENSED
PROFESSIONAL ENGINEER

Eleanor R. Rivera 9-28-2020

Binkley & Barfield, Inc
consulting engineers
Texas Registration Number F-257

CEDAR PARK

ANDERSON MILL ROAD
DRAINAGE AREAS
STA 68+50 - STA 73+00

DESIGN BY:	GCC	SCALE:	1"=40'
DRAWN BY:	DSH		
CHECKED BY:	BMB		
APPROVED BY:	BDR	SHEET:	14 OF 14
PROJECT NO:	156402		
DATE:	9/28/2020	PAGE:	104

9/28/2020
1:21:56 PM
T:\156402*AndersonMill*Road\CADD\SHEETS\DRDA1*Drainage*Area*014.dgn

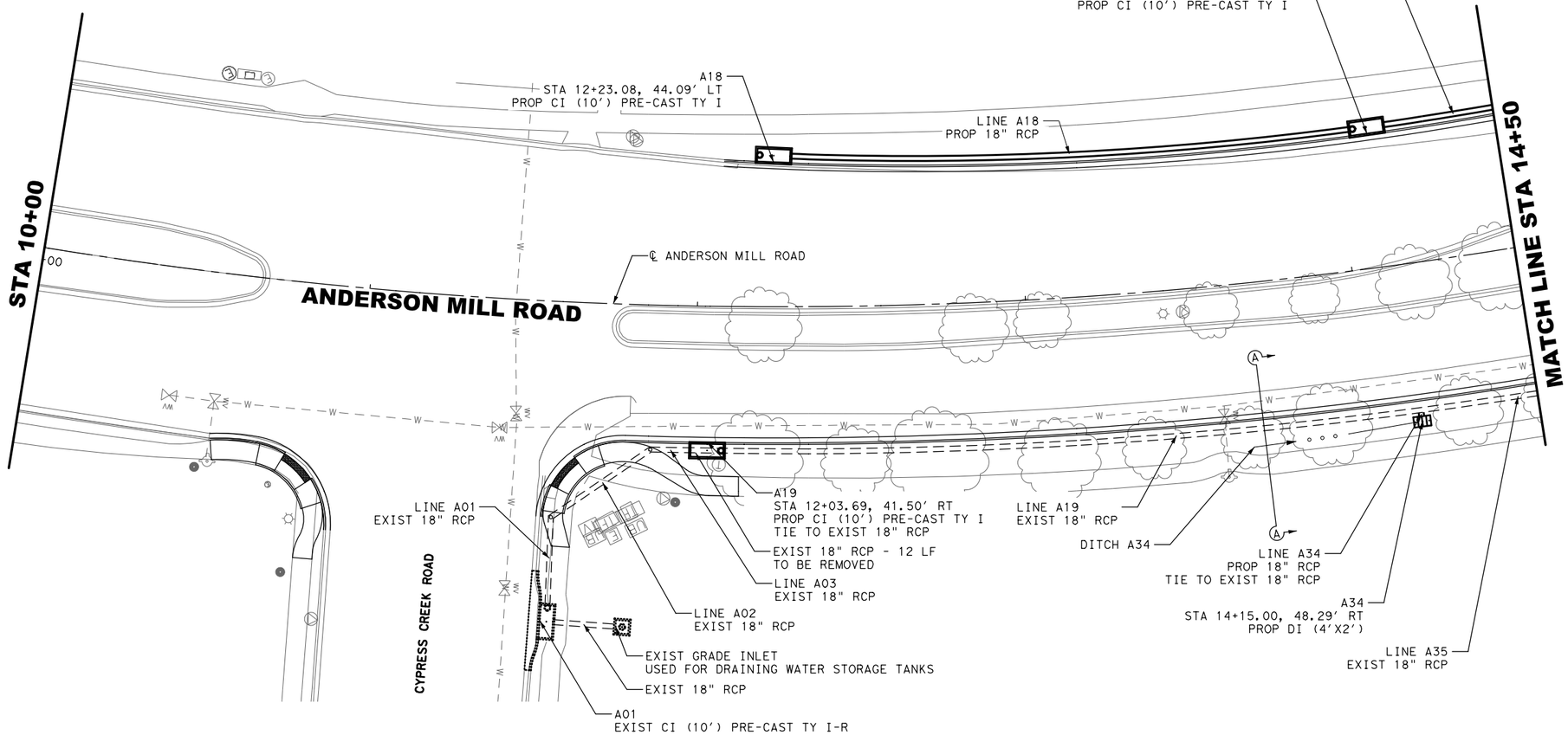

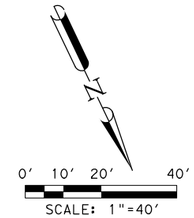

LEGEND

——X——	EXISTING UTILITY
————	EXISTING PLANIMETRICS
∘ ∘ ◄——	DITCH FLOWLINE
————	PROPOSED STORM SEWER
— — — —	EXISTING STORM SEWER
·····XXX·····	EXISTING CONTOUR
——XXX——	PROPOSED CONTOUR

NOTES:

1. CURB INLETS MEASURED FROM TOP FACE OF CURB.
2. GRATE INLETS MEASURED FROM TOP CENTER OF GRATE.
3. ALL PIPE IS CLASS III UNLESS OTHERWISE NOTED.
4. THE MATERIAL AND CONSTRUCTION PRACTICES SHALL BE IN ACCORDANCE WITH THE STANDARD SPECIFICATIONS OF THE CITY OF CEDAR PARK, CITY OF AUSTIN, AND TXDOT (WHERE APPLICABLE) AS PRESENTED IN THE LATEST EDITION, AND/OR AS OTHERWISE CONTAINED ON THE PLANS.
5. PROPOSED PIPE BEND LOCATIONS ARE APPROXIMATE. CONTRACTOR TO LOCATE PIPE PRIOR TO INSTALLATION TO DETERMINE EXACT BEND REQUIRED TO TIE TO EXISTING STORM SEWER SYSTEM.
6. CONTRACTOR TO VERIFY LOCATION AND ELEVATION OF EXISTING STRUCTURES PRIOR TO PROCEEDING WITH THE WORK. ANY DISCREPANCIES CAUSING MATERIAL CHANGES SHALL BE SENT VIA R.F.I. TO THE CITY'S REPRESENTATIVE.

NUMBER	DATE	REVISION	APPROVED

STATE OF TEXAS
ELEANOR R. RIVERA
87879
LICENSED
PROFESSIONAL ENGINEER

Eleanor R. Rivera 9-28-2020

Binkley & Barfield, Inc
consulting engineers
Texas Registration Number F-257

CEDAR PARK

SECTION A-A

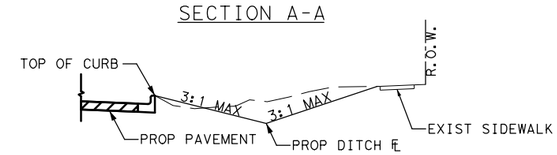

ANDERSON MILL ROAD
DRAINAGE PLAN SHEETS
STA 10+00 - STA 14+50

DESIGN BY:	GCC	SCALE:	1"=40'
DRAWN BY:	DSH		
CHECKED BY:	BMB		
APPROVED BY:	BDR	SHEET:	1 OF 14
PROJECT NO:	156402		
DATE:	9/28/2020	PAGE:	105

9/28/2020
1:22:16 PM
T:\156402*Anderson*Mill*Road\CADD\SHEETS\DRDP1*Drainage*Plan*001.dgn

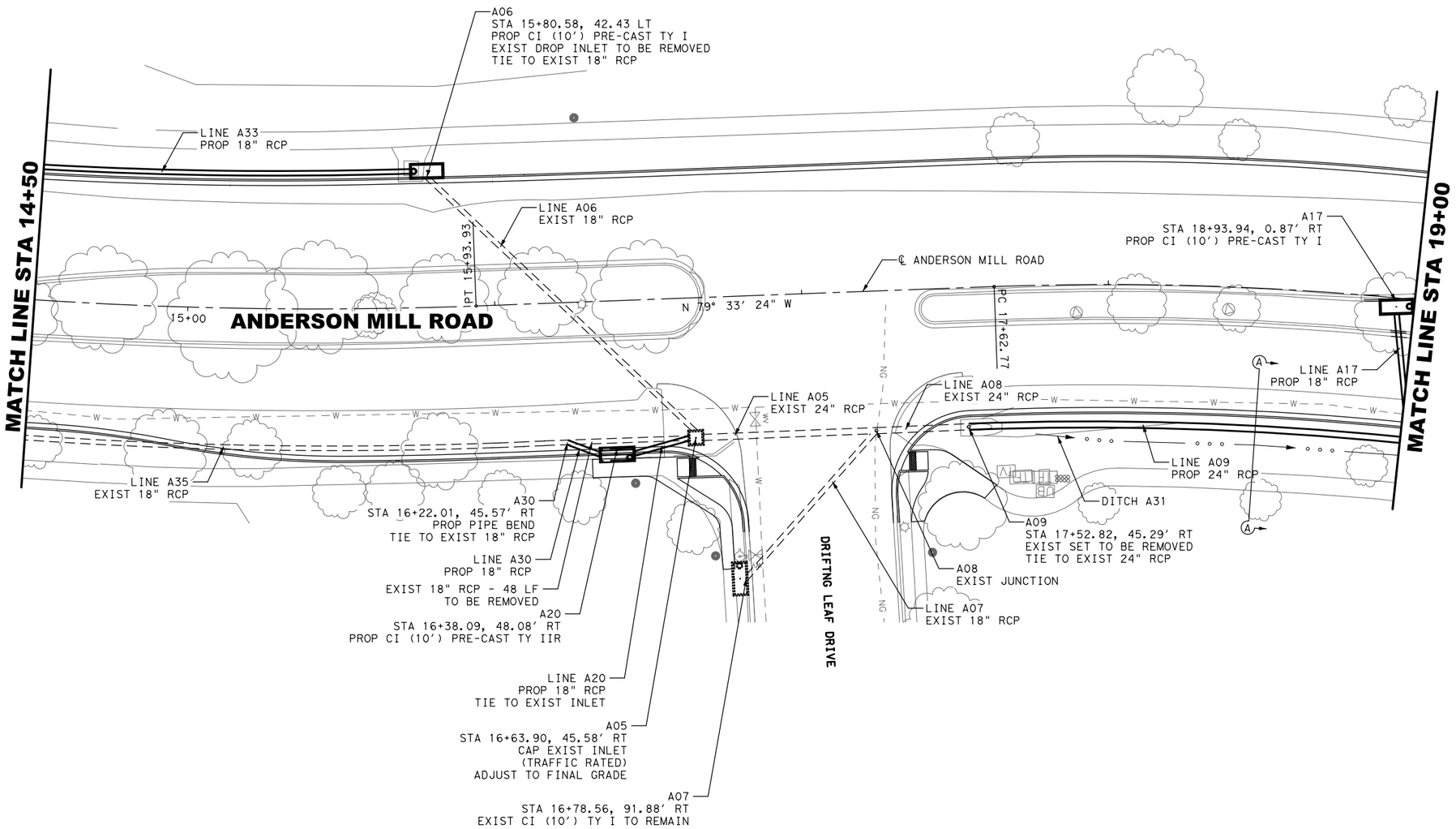

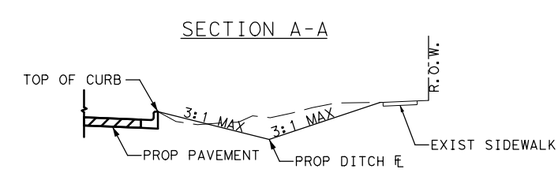

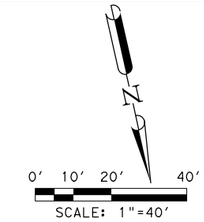

LEGEND

——X——	EXISTING UTILITY
————	EXISTING PLANIMETRICS
∘ ∘ ◄——	DITCH FLOWLINE
————	PROPOSED STORM SEWER
— — — — —	EXISTING STORM SEWER
·····XXX·····	EXISTING CONTOUR
——XXX——	PROPOSED CONTOUR

NOTES:

1. CURB INLETS MEASURED FROM TOP FACE OF CURB.
2. GRATE INLETS MEASURED FROM TOP CENTER OF GRATE.
3. ALL PIPE IS CLASS III UNLESS OTHERWISE NOTED.
4. THE MATERIAL AND CONSTRUCTION PRACTICES SHALL BE IN ACCORDANCE WITH THE STANDARD SPECIFICATIONS OF THE CITY OF CEDAR PARK, CITY OF AUSTIN, AND TXDOT (WHERE APPLICABLE) AS PRESENTED IN THE LATEST EDITION, AND/OR AS OTHERWISE CONTAINED ON THE PLANS.
5. PROPOSED PIPE BEND LOCATIONS ARE APPROXIMATE. CONTRACTOR TO LOCATE PIPE PRIOR TO INSTALLATION TO DETERMINE EXACT BEND REQUIRED TO TIE TO EXISTING STORM SEWER SYSTEM.
6. CONTRACTOR TO VERIFY LOCATION AND ELEVATION OF EXISTING STRUCTURES PRIOR TO PROCEEDING WITH THE WORK. ANY DISCREPANCIES CAUSING MATERIAL CHANGES SHALL BE SENT VIA R.F.I. TO THE CITY'S REPRESENTATIVE.

NUMBER	DATE	REVISION	APPROVED

STATE OF TEXAS
ELEANOR R. RIVERA
87879
LICENSED
PROFESSIONAL ENGINEER

Eleanor R. Rivera 9-28-2020

Binkley & Barfield, Inc
consulting engineers
Texas Registration Number F-257

CEDAR PARK

ANDERSON MILL ROAD
DRAINAGE PLAN SHEETS
STA 14+50 - STA 19+00

DESIGN BY:	GCC	SCALE:	1"=40'
DRAWN BY:	DSH		
CHECKED BY:	BMB		
APPROVED BY:	BDR	SHEET:	2 OF 14
PROJECT NO:	156402		
DATE:	9/28/2020	PAGE:	106

9/28/2020
1:22:19 PM
T:\156402*AndersonMill*Road\CADD\SHEETS\DRDP1*Drainage*Plan*002.dgn

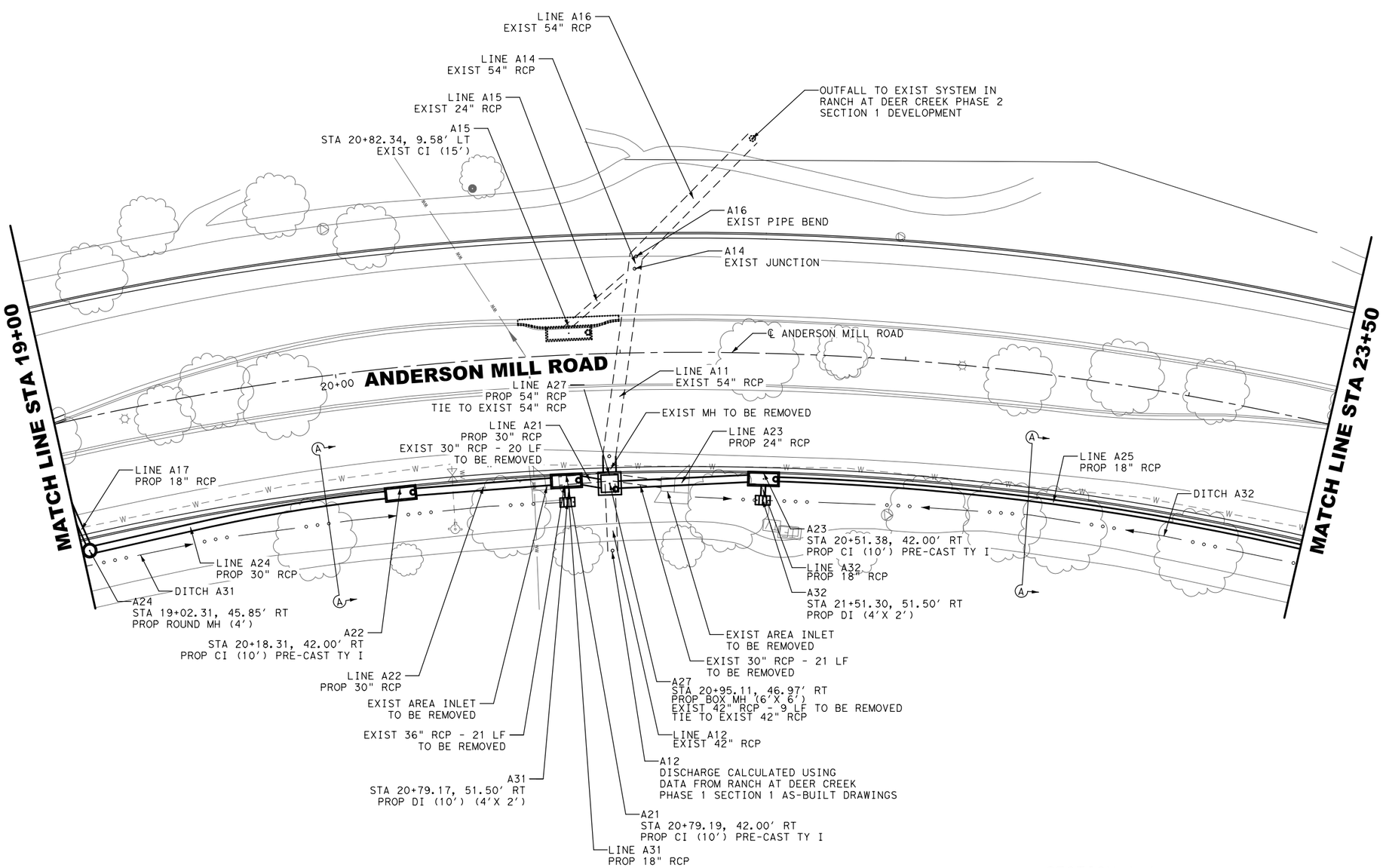

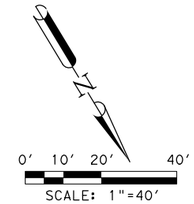

LEGEND

——X——	EXISTING UTILITY
———	EXISTING PLANIMETRICS
∘ ∘ ◄——	DITCH FLOWLINE
═══	PROPOSED STORM SEWER
— — — —	EXISTING STORM SEWER
·····XXX·····	EXISTING CONTOUR
——XXX——	PROPOSED CONTOUR

NOTES:

1. CURB INLETS MEASURED FROM TOP FACE OF CURB.
2. GRATE INLETS MEASURED FROM TOP CENTER OF GRATE.
3. ALL PIPE IS CLASS III UNLESS OTHERWISE NOTED.
4. THE MATERIAL AND CONSTRUCTION PRACTICES SHALL BE IN ACCORDANCE WITH THE STANDARD SPECIFICATIONS OF THE CITY OF CEDAR PARK, CITY OF AUSTIN, AND TXDOT (WHERE APPLICABLE) AS PRESENTED IN THE LATEST EDITION, AND/OR AS OTHERWISE CONTAINED ON THE PLANS.
5. PROPOSED PIPE BEND LOCATIONS ARE APPROXIMATE. CONTRACTOR TO LOCATE PIPE PRIOR TO INSTALLATION TO DETERMINE EXACT BEND REQUIRED TO TIE TO EXISTING STORM SEWER SYSTEM.
6. CONTRACTOR TO VERIFY LOCATION AND ELEVATION OF EXISTING STRUCTURES PRIOR TO PROCEEDING WITH THE WORK. ANY DISCREPANCIES CAUSING MATERIAL CHANGES SHALL BE SENT VIA R.F.I. TO THE CITY'S REPRESENTATIVE.

NUMBER	DATE	REVISION	APPROVED

STATE OF TEXAS
ELEANOR R. RIVERA
87879
LICENSED
PROFESSIONAL ENGINEER

Eleanor R. Rivera 9-28-2020

Binkley & Barfield, Inc
consulting engineers
Texas Registration Number F-257

CEDAR PARK

ANDERSON MILL ROAD
DRAINAGE PLAN SHEETS
STA 19+00 - STA 23+50

DESIGN BY:	GCC	SCALE:	1"=40'
DRAWN BY:	DSH		
CHECKED BY:	BMB		
APPROVED BY:	BDR	SHEET:	3 OF 14
PROJECT NO:	156402		
DATE:	9/28/2020	PAGE:	107

9/28/2020
1:22:23 PM
T:\156402*AndersonMill*Road\CADD\SHEETS\DRDP1*Drainage*Plan*003.dgn

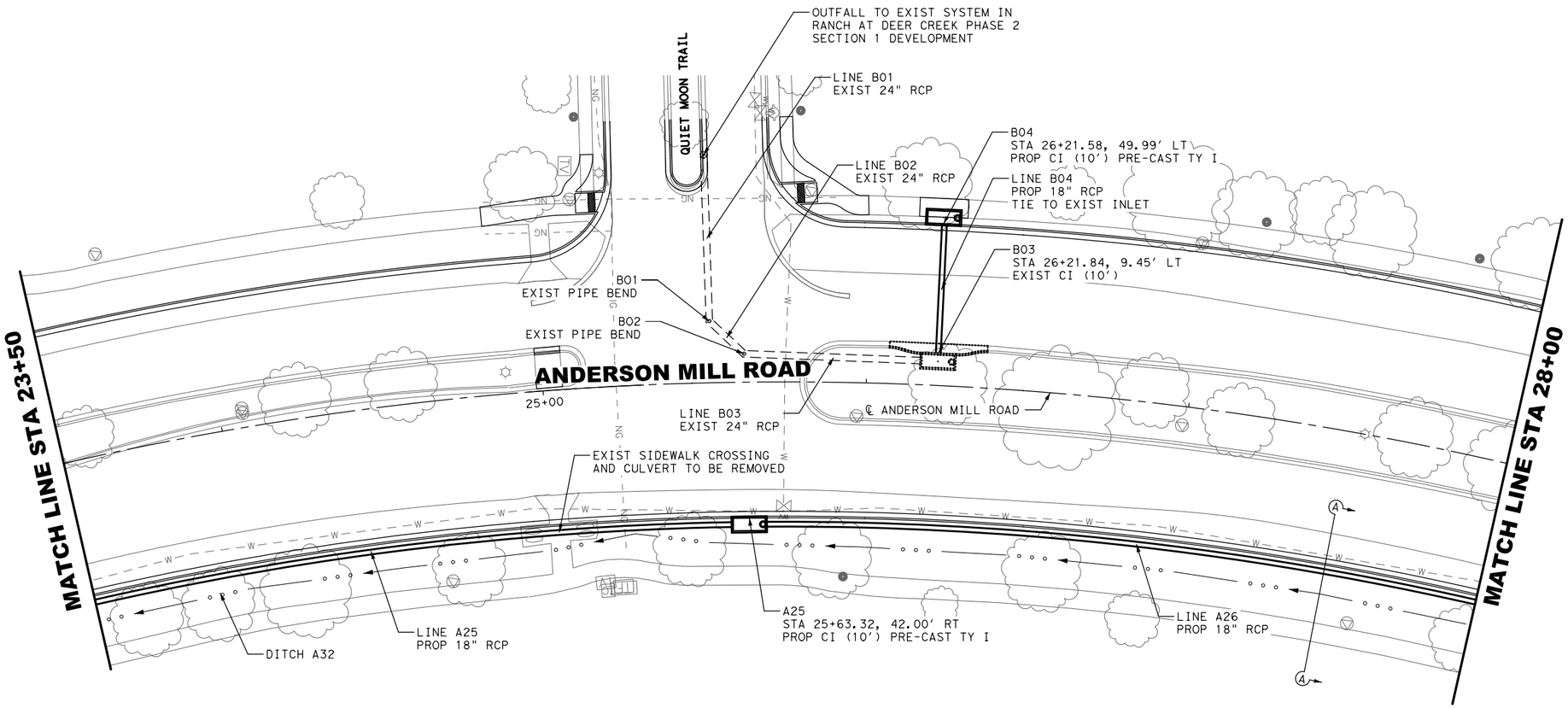

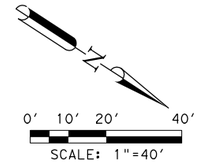

LEGEND

——X——	EXISTING UTILITY
———	EXISTING PLANIMETRICS
∘ ∘ ◄——	DITCH FLOWLINE
———	PROPOSED STORM SEWER
— — — — —	EXISTING STORM SEWER
·····XXX·····	EXISTING CONTOUR
——XXX——	PROPOSED CONTOUR

NOTES:

1. CURB INLETS MEASURED FROM TOP FACE OF CURB.
2. GRATE INLETS MEASURED FROM TOP CENTER OF GRATE.
3. ALL PIPE IS CLASS III UNLESS OTHERWISE NOTED.
4. THE MATERIAL AND CONSTRUCTION PRACTICES SHALL BE IN ACCORDANCE WITH THE STANDARD SPECIFICATIONS OF THE CITY OF CEDAR PARK, CITY OF AUSTIN, AND TXDOT (WHERE APPLICABLE) AS PRESENTED IN THE LATEST EDITION, AND/OR AS OTHERWISE CONTAINED ON THE PLANS.
5. PROPOSED PIPE BEND LOCATIONS ARE APPROXIMATE. CONTRACTOR TO LOCATE PIPE PRIOR TO INSTALLATION TO DETERMINE EXACT BEND REQUIRED TO TIE TO EXISTING STORM SEWER SYSTEM.
6. CONTRACTOR TO VERIFY LOCATION AND ELEVATION OF EXISTING STRUCTURES PRIOR TO PROCEEDING WITH THE WORK. ANY DISCREPANCIES CAUSING MATERIAL CHANGES SHALL BE SENT VIA R.F.I. TO THE CITY'S REPRESENTATIVE.

NUMBER	DATE	REVISION	APPROVED

SECTION A-A

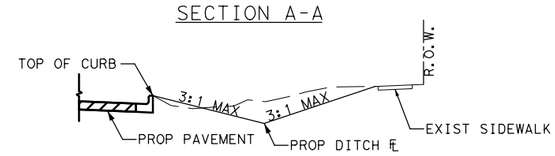

STATE OF TEXAS
ELEANOR R. RIVERA
87879
LICENSED
PROFESSIONAL ENGINEER

Eleanor R. Rivera 9-28-2020

Binkley & Barfield, Inc
consulting engineers
Texas Registration Number F-257

CEDAR PARK

ANDERSON MILL ROAD
DRAINAGE PLAN SHEETS
STA 23+50 - STA 28+00

DESIGN BY:	GCC	SCALE:	1"=40'
DRAWN BY:	DSH		
CHECKED BY:	BMB		
APPROVED BY:	BDR	SHEET:	4 OF 14
PROJECT NO:	156402		
DATE:	9/28/2020	PAGE:	108

9/28/2020
1:22:27 PM
I:\156402*Anderson*Mill*Road\CADD\SHEETS\DRDP1*Drainage*Plan*004.dgn

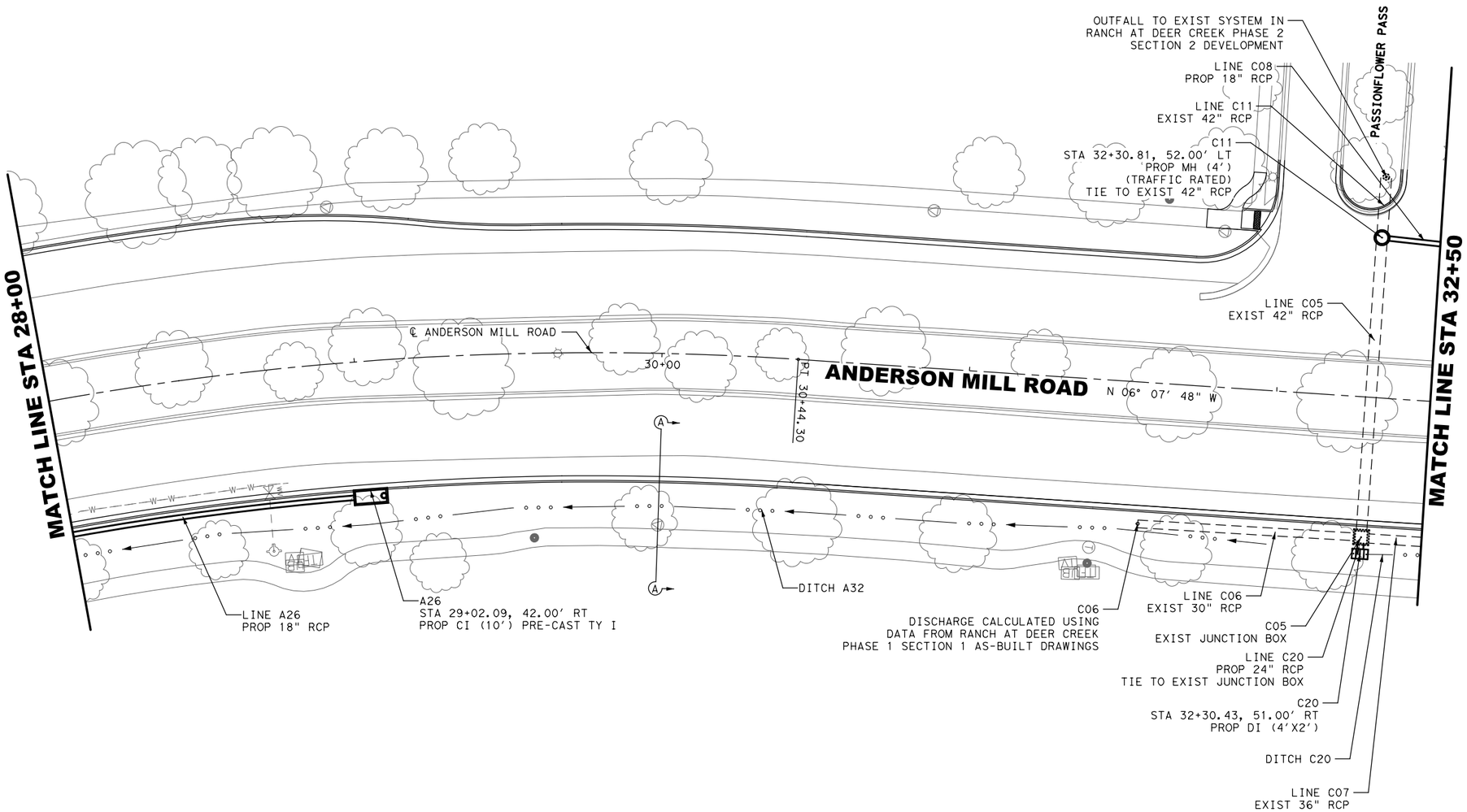

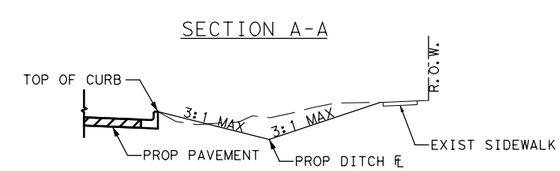

0' 10' 20' 40'

SCALE: 1"=40'

LEGEND

——X——	EXISTING UTILITY
———	EXISTING PLANIMETRICS
◦ ◦ ◄——	DITCH FLOWLINE
———	PROPOSED STORM SEWER
— — — — —	EXISTING STORM SEWER
·····XXX·····	EXISTING CONTOUR
——XXX——	PROPOSED CONTOUR

NOTES:

1. CURB INLETS MEASURED FROM TOP FACE OF CURB.
2. GRATE INLETS MEASURED FROM TOP CENTER OF GRATE.
3. ALL PIPE IS CLASS III UNLESS OTHERWISE NOTED.
4. THE MATERIAL AND CONSTRUCTION PRACTICES SHALL BE IN ACCORDANCE WITH THE STANDARD SPECIFICATIONS OF THE CITY OF CEDAR PARK, CITY OF AUSTIN, AND TXDOT (WHERE APPLICABLE) AS PRESENTED IN THE LATEST EDITION, AND/OR AS OTHERWISE CONTAINED ON THE PLANS.
5. PROPOSED PIPE BEND LOCATIONS ARE APPROXIMATE. CONTRACTOR TO LOCATE PIPE PRIOR TO INSTALLATION TO DETERMINE EXACT BEND REQUIRED TO TIE TO EXISTING STORM SEWER SYSTEM.
6. CONTRACTOR TO VERIFY LOCATION AND ELEVATION OF EXISTING STRUCTURES PRIOR TO PROCEEDING WITH THE WORK. ANY DISCREPANCIES CAUSING MATERIAL CHANGES SHALL BE SENT VIA R.F.I. TO THE CITY'S REPRESENTATIVE.

NUMBER	DATE	REVISION	APPROVED

STATE OF TEXAS
ELEANOR R. RIVERA
87879
LICENSED
PROFESSIONAL ENGINEER

Eleanor R. Rivera 9-28-2020

Binkley & Barfield, Inc
consulting engineers
Texas Registration Number F-257

CEDAR PARK

ANDERSON MILL ROAD
DRAINAGE PLAN SHEETS
STA 28+00 - STA 32+50

DESIGN BY:	GCC	SCALE:	1"=40'
DRAWN BY:	DSH		
CHECKED BY:	BMB		
APPROVED BY:	BDR	SHEET:	5 OF 14
PROJECT NO:	156402		
DATE:	9/28/2020	PAGE:	109

9/28/2020
1:22:31 PM
I:\156402*Anderson*Mill*Road\CADD\SHEETS\DRDP1*Drainage*Plan*005.dgn

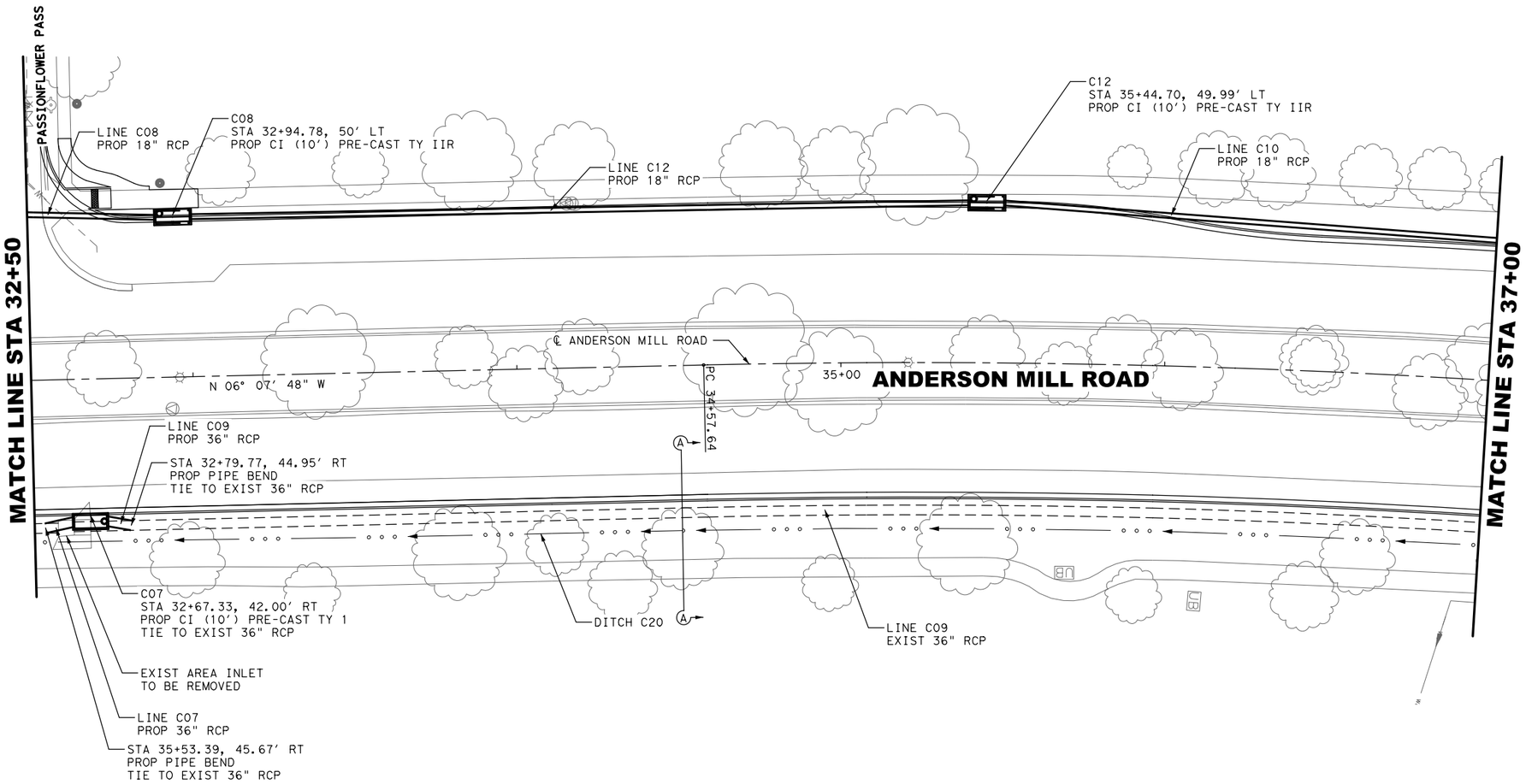

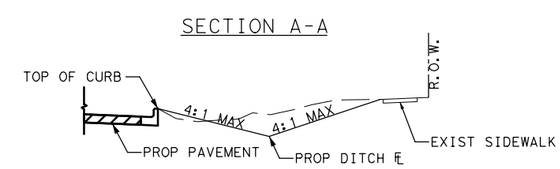

0' 10' 20' 40'

SCALE: 1"=40'

LEGEND

——X——	EXISTING UTILITY
———	EXISTING PLANIMETRICS
∘ ∘ ◄——	DITCH FLOWLINE
———	PROPOSED STORM SEWER
— — — — —	EXISTING STORM SEWER
·····XXX·····	EXISTING CONTOUR
——XXX——	PROPOSED CONTOUR

NOTES:

1. CURB INLETS MEASURED FROM TOP FACE OF CURB.
2. GRATE INLETS MEASURED FROM TOP CENTER OF GRATE.
3. ALL PIPE IS CLASS III UNLESS OTHERWISE NOTED.
4. THE MATERIAL AND CONSTRUCTION PRACTICES SHALL BE IN ACCORDANCE WITH THE STANDARD SPECIFICATIONS OF THE CITY OF CEDAR PARK, CITY OF AUSTIN, AND TXDOT (WHERE APPLICABLE) AS PRESENTED IN THE LATEST EDITION, AND/OR AS OTHERWISE CONTAINED ON THE PLANS.
5. PROPOSED PIPE BEND LOCATIONS ARE APPROXIMATE. CONTRACTOR TO LOCATE PIPE PRIOR TO INSTALLATION TO DETERMINE EXACT BEND REQUIRED TO TIE TO EXISTING STORM SEWER SYSTEM.
6. CONTRACTOR TO VERIFY LOCATION AND ELEVATION OF EXISTING STRUCTURES PRIOR TO PROCEEDING WITH THE WORK. ANY DISCREPANCIES CAUSING MATERIAL CHANGES SHALL BE SENT VIA R.F.I. TO THE CITY'S REPRESENTATIVE.

NUMBER	DATE	REVISION	APPROVED

STATE OF TEXAS
ELEANOR R. RIVERA
87879
LICENSED
PROFESSIONAL ENGINEER

Eleanor R. Rivera 9-28-2020

Binkley & Barfield, Inc
consulting engineers
Texas Registration Number F-257

CEDAR PARK

ANDERSON MILL ROAD
DRAINAGE PLAN SHEETS
STA 32+50 - STA 37+00

DESIGN BY:	GCC	SCALE:	1"=40'
DRAWN BY:	DSH		
CHECKED BY:	BMB		
APPROVED BY:	BDR	SHEET:	6 OF 14
PROJECT NO:	156402		
DATE:	9/28/2020	PAGE:	110

9/28/2020
1:22:34 PM
I:\156402*Anderson*Mill*Road\CADD\SHEETS\DRDP1*Drainage*Plan*006.dgn

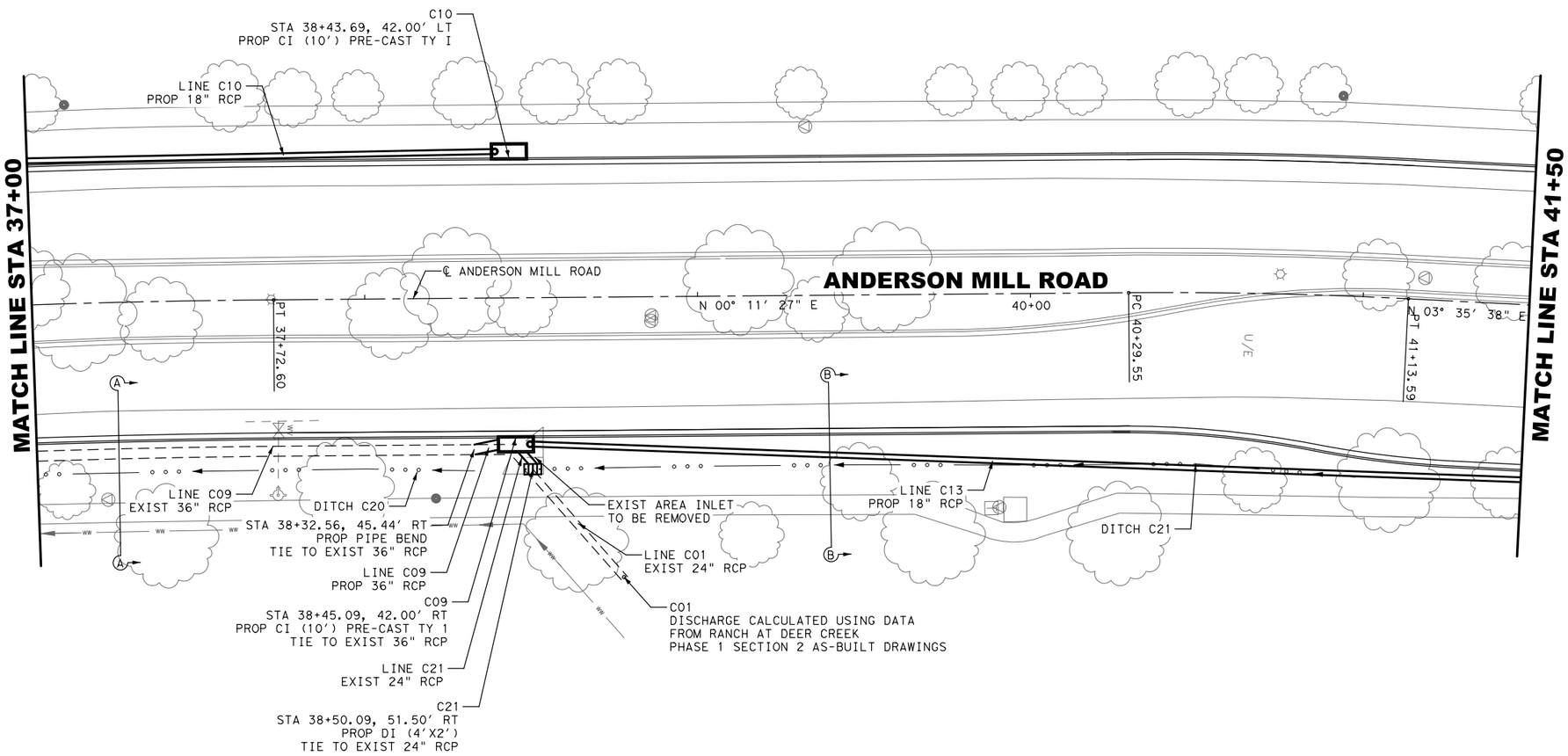

0' 10' 20' 40'

SCALE: 1"=40'

LEGEND

- X — EXISTING UTILITY
- EXISTING PLANIMETRICS
- DITCH FLOWLINE
- PROPOSED STORM SEWER
- EXISTING STORM SEWER
- XXX EXISTING CONTOUR
- XXX PROPOSED CONTOUR

NOTES:

1. CURB INLETS MEASURED FROM TOP FACE OF CURB.
2. GRATE INLETS MEASURED FROM TOP CENTER OF GRATE.
3. ALL PIPE IS CLASS III UNLESS OTHERWISE NOTED.
4. THE MATERIAL AND CONSTRUCTION PRACTICES SHALL BE IN ACCORDANCE WITH THE STANDARD SPECIFICATIONS OF THE CITY OF CEDAR PARK, CITY OF AUSTIN, AND TXDOT (WHERE APPLICABLE) AS PRESENTED IN THE LATEST EDITION, AND/OR AS OTHERWISE CONTAINED ON THE PLANS.
5. PROPOSED PIPE BEND LOCATIONS ARE APPROXIMATE. CONTRACTOR TO LOCATE PIPE PRIOR TO INSTALLATION TO DETERMINE EXACT BEND REQUIRED TO TIE TO EXISTING STORM SEWER SYSTEM.
6. CONTRACTOR TO VERIFY LOCATION AND ELEVATION OF EXISTING STRUCTURES PRIOR TO PROCEEDING WITH THE WORK. ANY DISCREPANCIES CAUSING MATERIAL CHANGES SHALL BE SENT VIA R.F.I. TO THE CITY'S REPRESENTATIVE.

NUMBER	DATE	REVISION	APPROVED

STATE OF TEXAS
ELEANOR R. RIVERA
87879
LICENSED
PROFESSIONAL ENGINEER

Eleanor R. Rivera 9-28-2020

Binkley & Barfield, Inc
consulting engineers
Texas Registration Number F-257

CEDAR PARK

SECTION A-A

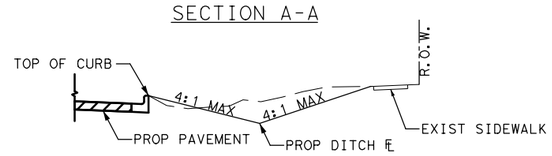

SECTION B-B

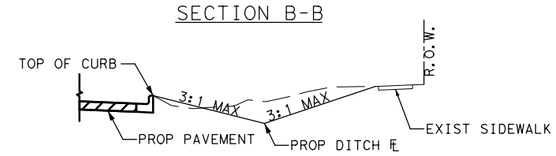

ANDERSON MILL ROAD

DRAINAGE PLAN SHEETS

STA 37+00 - STA 41+50

DESIGN BY:	GCC	SCALE:	1"=40'
DRAWN BY:	DSH		
CHECKED BY:	BMB		
APPROVED BY:	BDR	SHEET:	7 OF 14
PROJECT NO:	156402		
DATE:	9/28/2020	PAGE:	111

9/28/2020
1:22:38 PM
T:\156402*Anderson*Mill*Road\CADD\SHEETS\DRDP1*Drainage*Plan*007.dgn

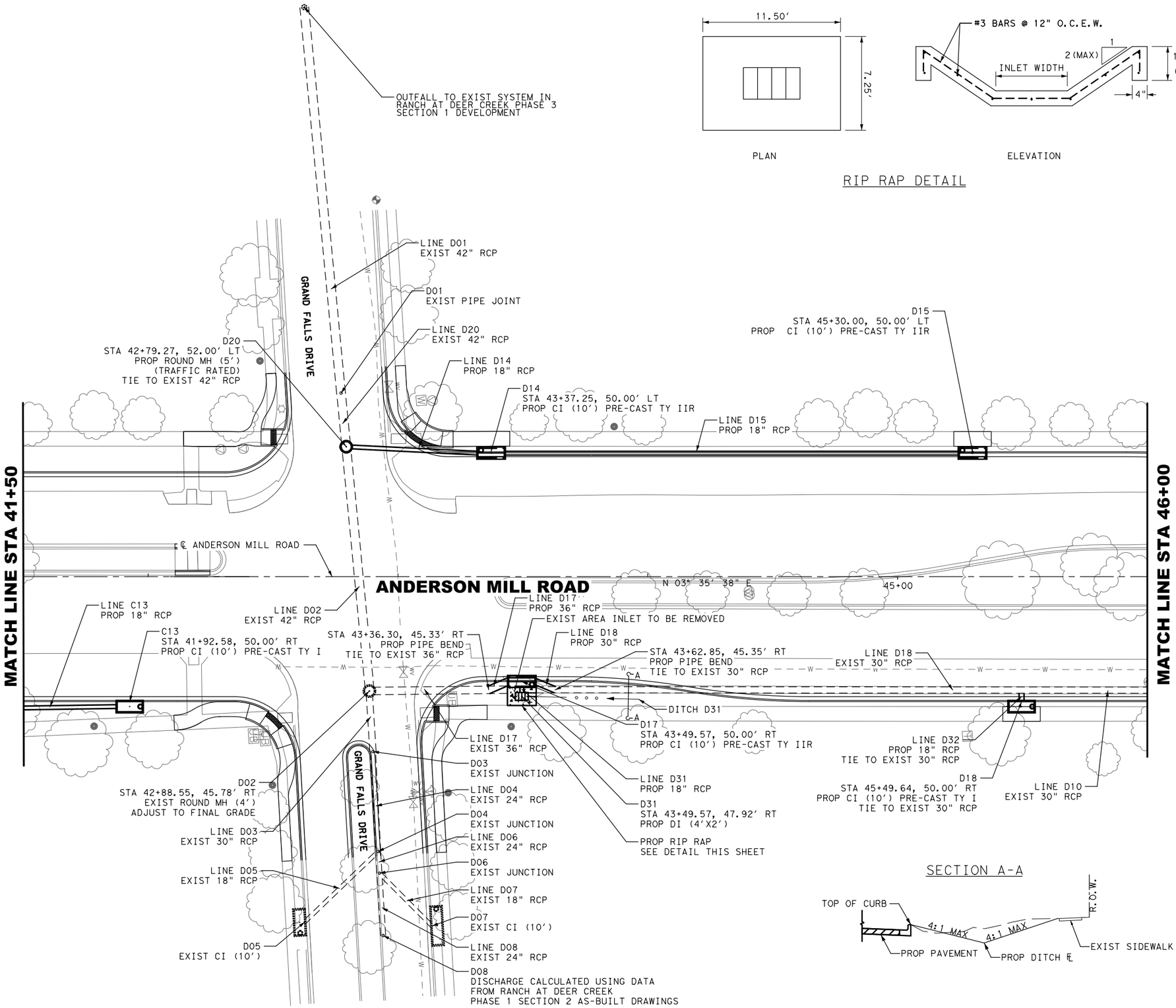

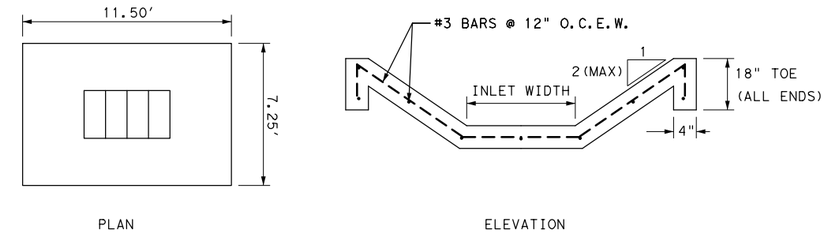

RIP RAP DETAIL

SECTION A-A

0' 10' 20' 40'

SCALE: 1"=40'

LEGEND

——X——	EXISTING UTILITY
———	EXISTING PLANIMETRICS
∘ ∘ ◄——	DITCH FLOWLINE
———	PROPOSED STORM SEWER
— — — —	EXISTING STORM SEWER
·····XXX·····	EXISTING CONTOUR
——XXX——	PROPOSED CONTOUR

NOTES:

1. CURB INLETS MEASURED FROM TOP FACE OF CURB.
2. GRATE INLETS MEASURED FROM TOP CENTER OF GRATE.
3. ALL PIPE IS CLASS III UNLESS OTHERWISE NOTED.
4. THE MATERIAL AND CONSTRUCTION PRACTICES SHALL BE IN ACCORDANCE WITH THE STANDARD SPECIFICATIONS OF THE CITY OF CEDAR PARK, CITY OF AUSTIN, AND TXDOT (WHERE APPLICABLE) AS PRESENTED IN THE LATEST EDITION, AND/OR AS OTHERWISE CONTAINED ON THE PLANS.
5. PROPOSED PIPE BEND LOCATIONS ARE APPROXIMATE. CONTRACTOR TO LOCATE PIPE PRIOR TO INSTALLATION TO DETERMINE EXACT BEND REQUIRED TO TIE TO EXISTING STORM SEWER SYSTEM.
6. CONTRACTOR TO VERIFY LOCATION AND ELEVATION OF EXISTING STRUCTURES PRIOR TO PROCEEDING WITH THE WORK. ANY DISCREPANCIES CAUSING MATERIAL CHANGES SHALL BE SENT VIA R.F.I. TO THE CITY'S REPRESENTATIVE.

NUMBER	DATE	REVISION	APPROVED

STATE OF TEXAS
ELEANOR R. RIVERA
87879
LICENSED
PROFESSIONAL ENGINEER

Eleanor R. Rivera 9-28-2020

Binkley & Barfield, Inc
consulting engineers
Texas Registration Number F-257

CEDAR PARK

ANDERSON MILL ROAD
DRAINAGE PLAN SHEETS
STA 41+50 - STA 46+00

DESIGN BY:	GCC	SCALE:	1"=40'
DRAWN BY:	DSH		
CHECKED BY:	BMB		
APPROVED BY:	BDR	SHEET:	8 OF 14
PROJECT NO:	156402		
DATE:	9/28/2020	PAGE:	112

9/28/2020
1:22:41 PM
I:\156402*Anderson*Mill*Road\CADD\SHEETS\DRDP1*Drainage*Plan*008.dgn

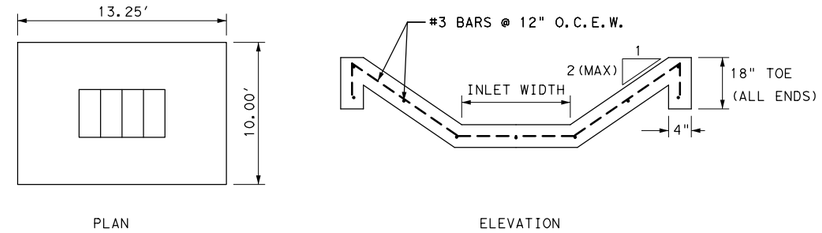

RIP RAP DETAIL

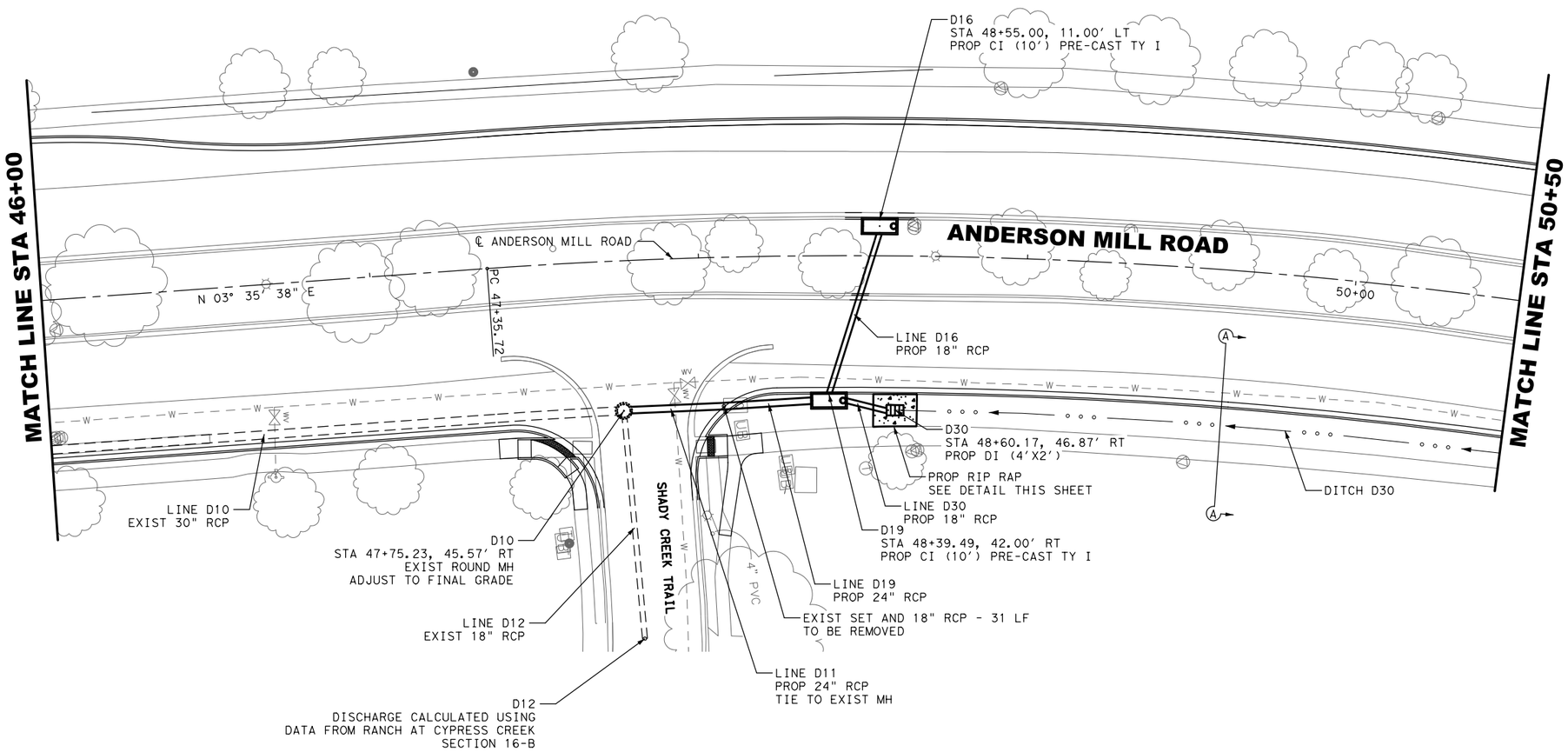

SECTION A-A

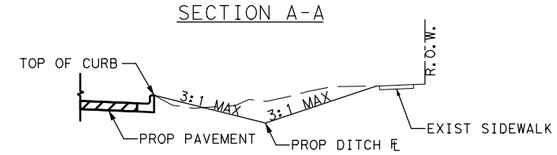

0' 10' 20' 40'

SCALE: 1"=40'

LEGEND

——X——	EXISTING UTILITY
———	EXISTING PLANIMETRICS
○ ○ ◄——	DITCH FLOWLINE
———	PROPOSED STORM SEWER
— — — — —	EXISTING STORM SEWER
·····XXX·····	EXISTING CONTOUR
——XXX——	PROPOSED CONTOUR

NOTES:

1. CURB INLETS MEASURED FROM TOP FACE OF CURB.
2. GRATE INLETS MEASURED FROM TOP CENTER OF GRATE.
3. ALL PIPE IS CLASS III UNLESS OTHERWISE NOTED.
4. THE MATERIAL AND CONSTRUCTION PRACTICES SHALL BE IN ACCORDANCE WITH THE STANDARD SPECIFICATIONS OF THE CITY OF CEDAR PARK, CITY OF AUSTIN, AND TXDOT (WHERE APPLICABLE) AS PRESENTED IN THE LATEST EDITION, AND/OR AS OTHERWISE CONTAINED ON THE PLANS.
5. PROPOSED PIPE BEND LOCATIONS ARE APPROXIMATE. CONTRACTOR TO LOCATE PIPE PRIOR TO INSTALLATION TO DETERMINE EXACT BEND REQUIRED TO TIE TO EXISTING STORM SEWER SYSTEM.
6. CONTRACTOR TO VERIFY LOCATION AND ELEVATION OF EXISTING STRUCTURES PRIOR TO PROCEEDING WITH THE WORK. ANY DISCREPANCIES CAUSING MATERIAL CHANGES SHALL BE SENT VIA R.F.I. TO THE CITY'S REPRESENTATIVE.

NUMBER	DATE	REVISION	APPROVED

STATE OF TEXAS
ELEANOR R. RIVERA
87879
LICENSED
PROFESSIONAL ENGINEER

Eleanor R. Rivera 9-28-2020

Binkley & Barfield, Inc
consulting engineers
Texas Registration Number F-257

CEDAR PARK

ANDERSON MILL ROAD
DRAINAGE PLAN SHEETS
STA 46+00 - STA 50+50

DESIGN BY:	GCC	SCALE:	1"=40'
DRAWN BY:	DSH		
CHECKED BY:	BMB		
APPROVED BY:	BDR	SHEET:	9 OF 14
PROJECT NO:	156402		
DATE:	9/28/2020	PAGE:	113

9/28/2020
1:22:45 PM
T:\156402*Anderson*Mill*Road\CADD\SHEETS\DRDP1*Drainage*Plan*009.dgn

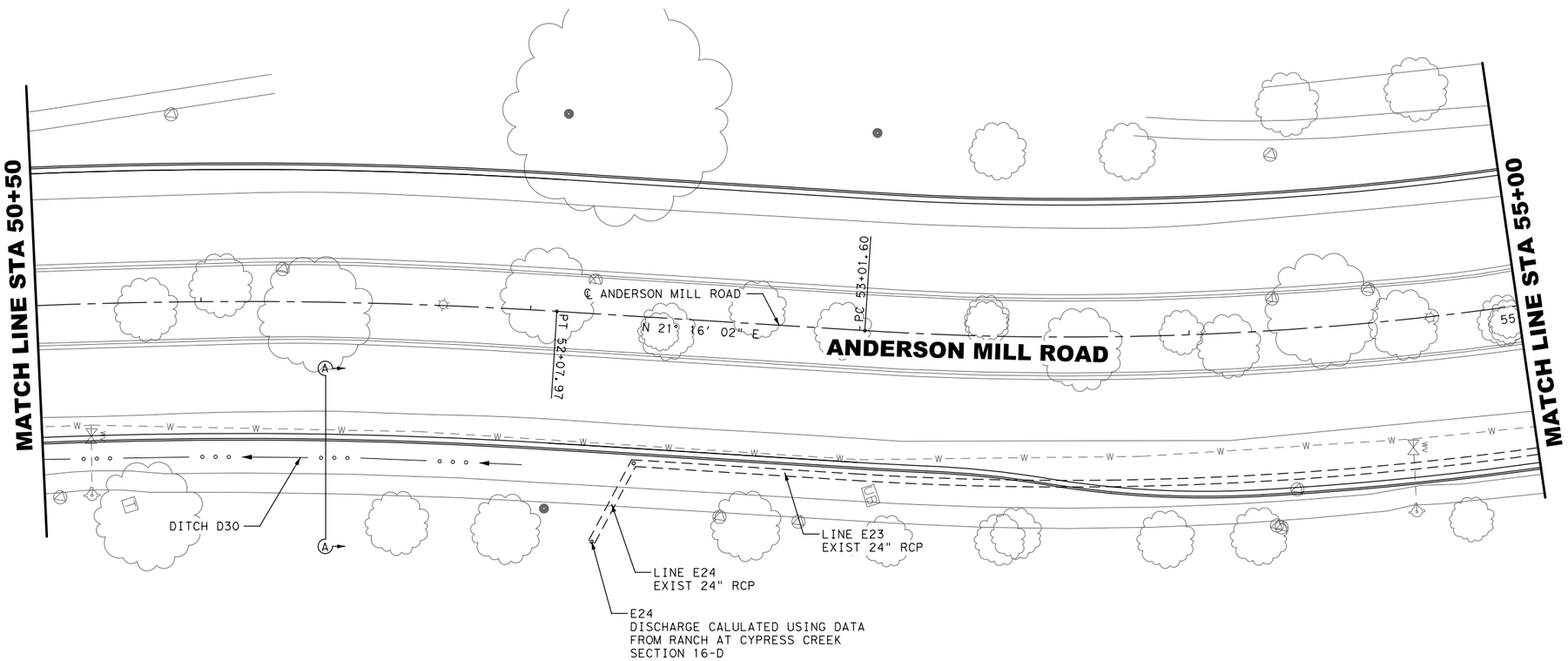

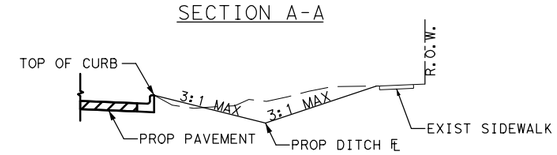

0′ 10′ 20′ 40′

SCALE: 1"=40′

LEGEND

- X — EXISTING UTILITY
- EXISTING PLANIMETRICS
- DITCH FLOWLINE
- PROPOSED STORM SEWER
- EXISTING STORM SEWER
- XXX EXISTING CONTOUR
- XXX PROPOSED CONTOUR

NOTES:

1. CURB INLETS MEASURED FROM TOP FACE OF CURB.
2. GRATE INLETS MEASURED FROM TOP CENTER OF GRATE.
3. ALL PIPE IS CLASS III UNLESS OTHERWISE NOTED.
4. THE MATERIAL AND CONSTRUCTION PRACTICES SHALL BE IN ACCORDANCE WITH THE STANDARD SPECIFICATIONS OF THE CITY OF CEDAR PARK, CITY OF AUSTIN, AND TXDOT (WHERE APPLICABLE) AS PRESENTED IN THE LATEST EDITION, AND/OR AS OTHERWISE CONTAINED ON THE PLANS.
5. PROPOSED PIPE BEND LOCATIONS ARE APPROXIMATE. CONTRACTOR TO LOCATE PIPE PRIOR TO INSTALLATION TO DETERMINE EXACT BEND REQUIRED TO TIE TO EXISTING STORM SEWER SYSTEM.
6. CONTRACTOR TO VERIFY LOCATION AND ELEVATION OF EXISTING STRUCTURES PRIOR TO PROCEEDING WITH THE WORK. ANY DISCREPANCIES CAUSING MATERIAL CHANGES SHALL BE SENT VIA R.F.I. TO THE CITY'S REPRESENTATIVE.

NUMBER	DATE	REVISION	APPROVED

STATE OF TEXAS
ELEANOR R. RIVERA
87879
LICENSED
PROFESSIONAL ENGINEER

Eleanor R. Rivera 9-28-2020

Binkley & Barfield, Inc
consulting engineers
Texas Registration Number F-257

CEDAR PARK

ANDERSON MILL ROAD
DRAINAGE PLAN SHEETS
STA 50+50 - STA 55+00

DESIGN BY:	GCC	SCALE:	1"=40′
DRAWN BY:	DSH		
CHECKED BY:	BMB	SHEET:	10 OF 14
APPROVED BY:	BDR		
PROJECT NO:	156402	PAGE:	114
DATE:	9/28/2020		

9/28/2020
1:22:49 PM
I:\156402*Anderson*Mill*Road\CADD\SHEETS\DRDP1*Drainage*Plan*010.dgn

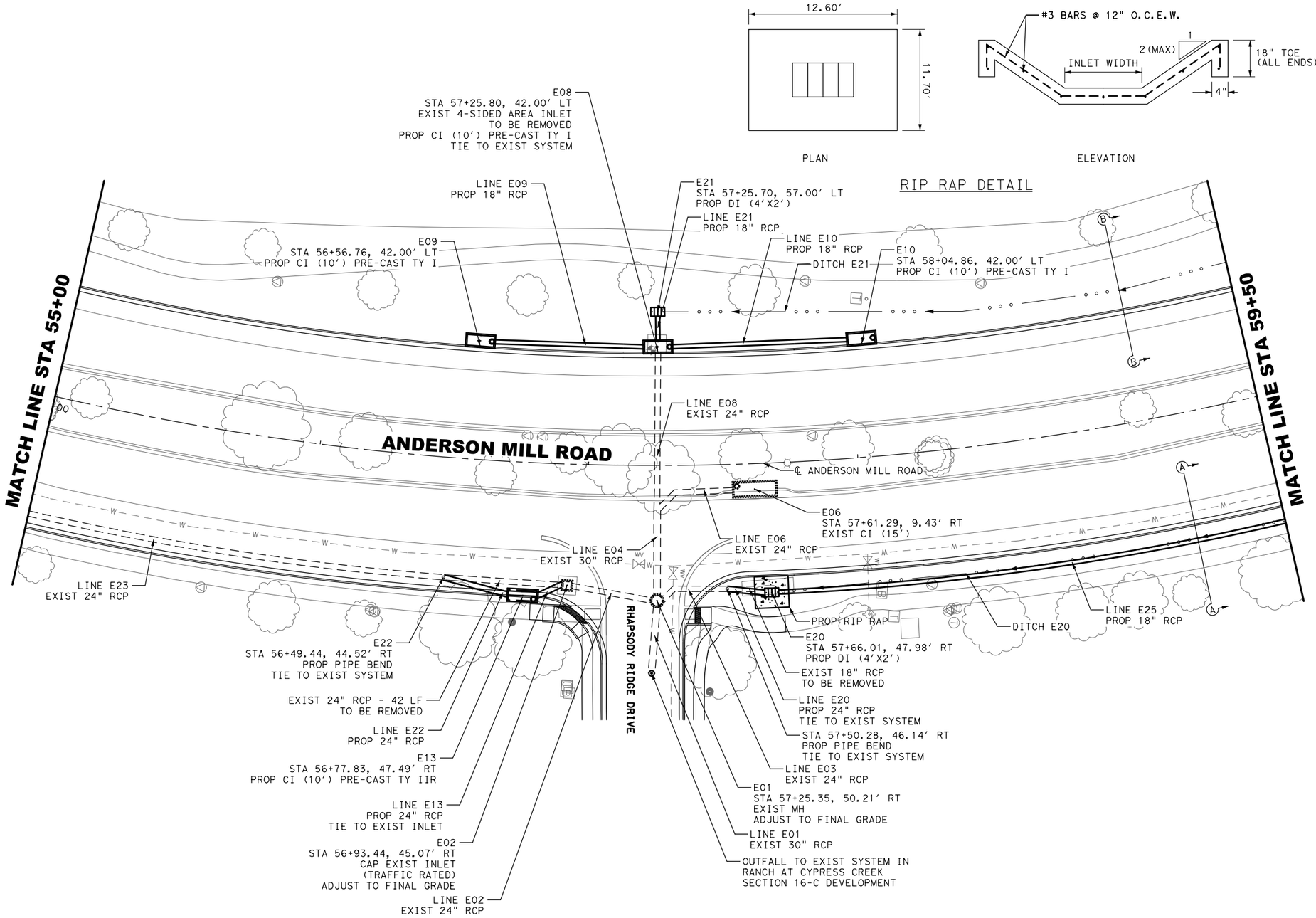

0' 10' 20' 40'

SCALE: 1"=40'

LEGEND

——X——	EXISTING UTILITY
———	EXISTING PLANIMETRICS
◦ ◦ ◄——	DITCH FLOWLINE
———	PROPOSED STORM SEWER
— — — —	EXISTING STORM SEWER
·····XXX·····	EXISTING CONTOUR
——XXX——	PROPOSED CONTOUR

NOTES:

1. CURB INLETS MEASURED FROM TOP FACE OF CURB.
2. GRATE INLETS MEASURED FROM TOP CENTER OF GRATE.
3. ALL PIPE IS CLASS III UNLESS OTHERWISE NOTED.
4. THE MATERIAL AND CONSTRUCTION PRACTICES SHALL BE IN ACCORDANCE WITH THE STANDARD SPECIFICATIONS OF THE CITY OF CEDAR PARK, CITY OF AUSTIN, AND TXDOT (WHERE APPLICABLE) AS PRESENTED IN THE LATEST EDITION, AND/OR AS OTHERWISE CONTAINED ON THE PLANS.
5. PROPOSED PIPE BEND LOCATIONS ARE APPROXIMATE. CONTRACTOR TO LOCATE PIPE PRIOR TO INSTALLATION TO DETERMINE EXACT BEND REQUIRED TO TIE TO EXISTING STORM SEWER SYSTEM.
6. CONTRACTOR TO VERIFY LOCATION AND ELEVATION OF EXISTING STRUCTURES PRIOR TO PROCEEDING WITH THE WORK. ANY DISCREPANCIES CAUSING MATERIAL CHANGES SHALL BE SENT VIA R.F.I. TO THE CITY'S REPRESENTATIVE.

NUMBER	DATE	REVISION	APPROVED

STATE OF TEXAS
ELEANOR R. RIVERA
87879
LICENSED
PROFESSIONAL ENGINEER

Eleanor R. Rivera 9-28-2020

Binkley & Barfield, Inc
consulting engineers
Texas Registration Number F-257

CEDAR PARK

ANDERSON MILL ROAD
DRAINAGE PLAN SHEETS
STA 55+00 - STA 59+50

DESIGN BY:	GCC	SCALE:	1"=40'
DRAWN BY:	DSH		
CHECKED BY:	BMB		
APPROVED BY:	BDR	SHEET:	11 OF 14
PROJECT NO:	156402		
DATE:	9/28/2020	PAGE:	115

9/28/2020
1:22:53 PM
I:\156402*Anderson*Mill*Road\CADD\SHEETS\DRDP1*Drainage*Plan*011.dgn

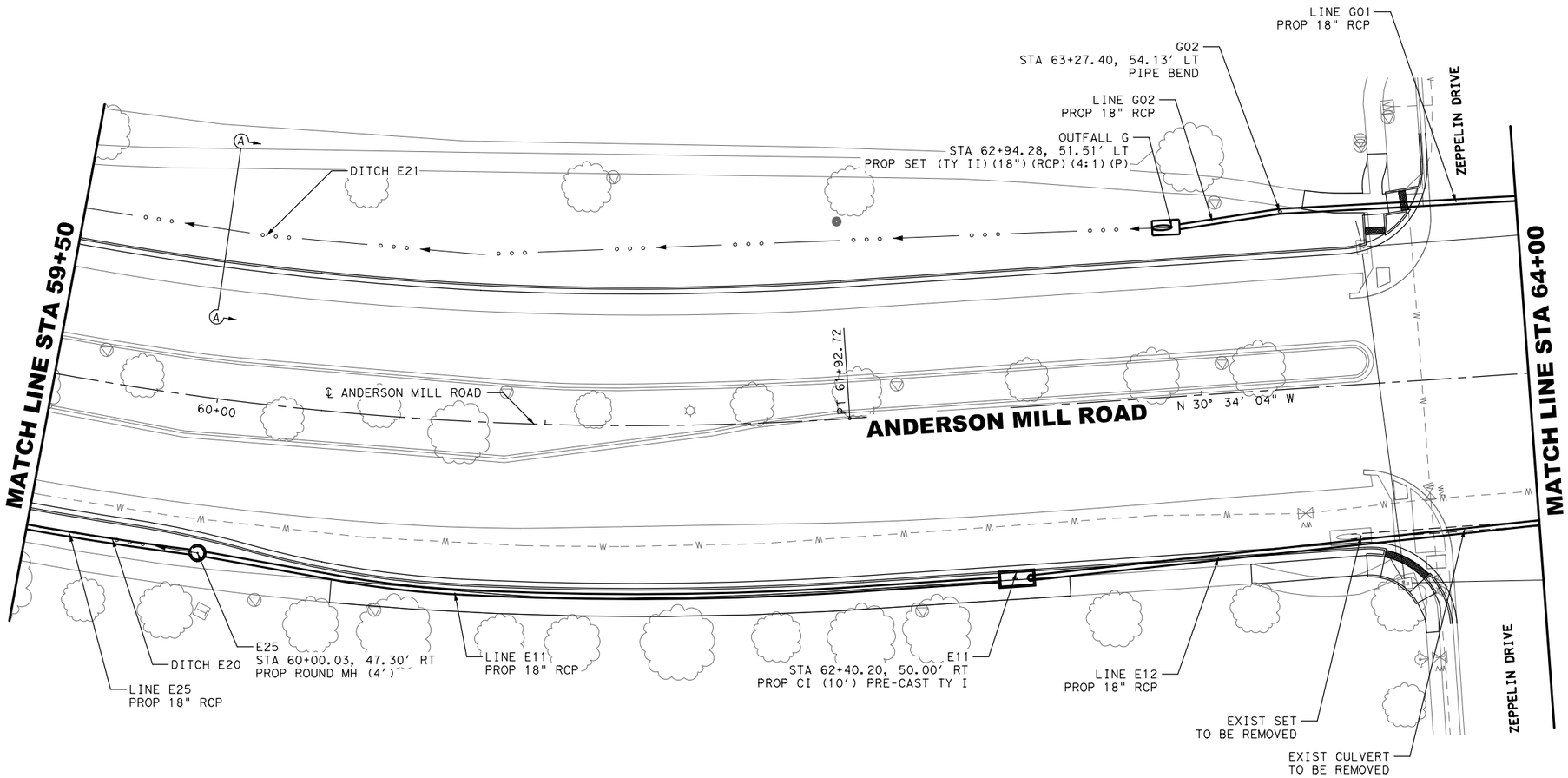

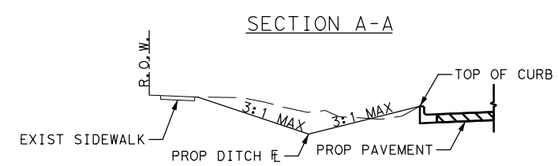

0' 10' 20' 40'

SCALE: 1"=40'

LEGEND

——X——	EXISTING UTILITY
———	EXISTING PLANIMETRICS
○ ○ ◄——	DITCH FLOWLINE
———	PROPOSED STORM SEWER
— — — —	EXISTING STORM SEWER
·····XXX·····	EXISTING CONTOUR
——XXX——	PROPOSED CONTOUR

NOTES:

1. CURB INLETS MEASURED FROM TOP FACE OF CURB.
2. GRATE INLETS MEASURED FROM TOP CENTER OF GRATE.
3. ALL PIPE IS CLASS III UNLESS OTHERWISE NOTED.
4. THE MATERIAL AND CONSTRUCTION PRACTICES SHALL BE IN ACCORDANCE WITH THE STANDARD SPECIFICATIONS OF THE CITY OF CEDAR PARK, CITY OF AUSTIN, AND TXDOT (WHERE APPLICABLE) AS PRESENTED IN THE LATEST EDITION, AND/OR AS OTHERWISE CONTAINED ON THE PLANS.
5. PROPOSED PIPE BEND LOCATIONS ARE APPROXIMATE. CONTRACTOR TO LOCATE PIPE PRIOR TO INSTALLATION TO DETERMINE EXACT BEND REQUIRED TO TIE TO EXISTING STORM SEWER SYSTEM.
6. CONTRACTOR TO VERIFY LOCATION AND ELEVATION OF EXISTING STRUCTURES PRIOR TO PROCEEDING WITH THE WORK. ANY DISCREPANCIES CAUSING MATERIAL CHANGES SHALL BE SENT VIA R.F.I. TO THE CITY'S REPRESENTATIVE.

NUMBER	DATE	REVISION	APPROVED

STATE OF TEXAS
ELEANOR R. RIVERA
87879
LICENSED
PROFESSIONAL ENGINEER

Eleanor R. Rivera 9-28-2020

Binkley & Barfield, Inc
consulting engineers
Texas Registration Number F-257

CEDAR PARK

ANDERSON MILL ROAD
DRAINAGE PLAN SHEETS
STA 59+50 - STA 64+00

DESIGN BY:	GCC	SCALE:	1"=40'
DRAWN BY:	DSH		
CHECKED BY:	BMB		
APPROVED BY:	BDR	SHEET:	12 OF 14
PROJECT NO:	156402		
DATE:	9/28/2020	PAGE:	116

9/28/2020
1:22:56 PM
I:\156402*Anderson*Mill*Road\CADD\SHEETS\DRDP1*Drainage*Plan*012.dgn

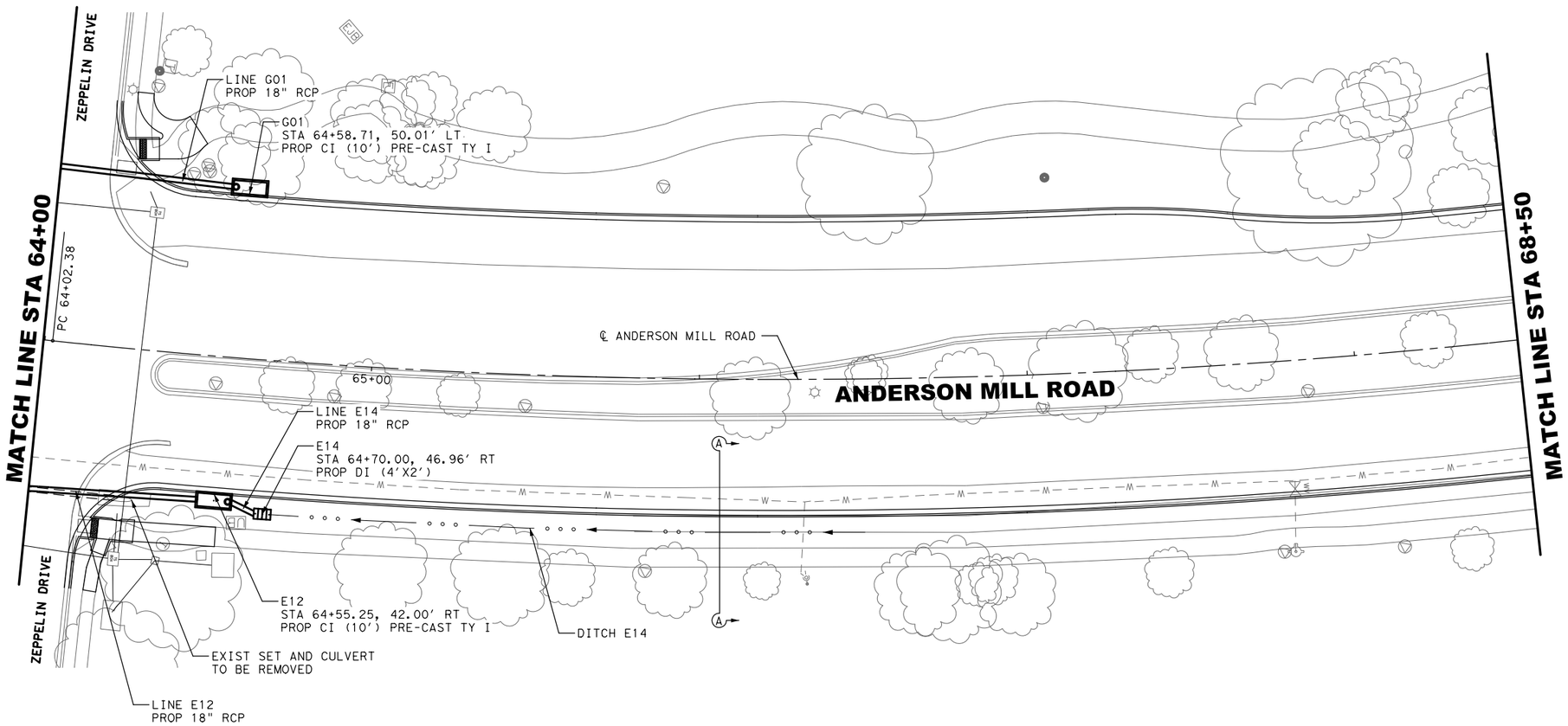

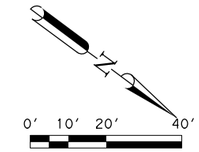

LEGEND

——X——	EXISTING UTILITY
————	EXISTING PLANIMETRICS
∘ ∘ ◄——	DITCH FLOWLINE
————	PROPOSED STORM SEWER
— — — —	EXISTING STORM SEWER
·····XXX·····	EXISTING CONTOUR
——XXX——	PROPOSED CONTOUR

NOTES:

1. CURB INLETS MEASURED FROM TOP FACE OF CURB.
2. GRATE INLETS MEASURED FROM TOP CENTER OF GRATE.
3. ALL PIPE IS CLASS III UNLESS OTHERWISE NOTED.
4. THE MATERIAL AND CONSTRUCTION PRACTICES SHALL BE IN ACCORDANCE WITH THE STANDARD SPECIFICATIONS OF THE CITY OF CEDAR PARK, CITY OF AUSTIN, AND TXDOT (WHERE APPLICABLE) AS PRESENTED IN THE LATEST EDITION, AND/OR AS OTHERWISE CONTAINED ON THE PLANS.
5. PROPOSED PIPE BEND LOCATIONS ARE APPROXIMATE. CONTRACTOR TO LOCATE PIPE PRIOR TO INSTALLATION TO DETERMINE EXACT BEND REQUIRED TO TIE TO EXISTING STORM SEWER SYSTEM.
6. CONTRACTOR TO VERIFY LOCATION AND ELEVATION OF EXISTING STRUCTURES PRIOR TO PROCEEDING WITH THE WORK. ANY DISCREPANCIES CAUSING MATERIAL CHANGES SHALL BE SENT VIA R.F.I. TO THE CITY'S REPRESENTATIVE.

NUMBER	DATE	REVISION	APPROVED

SECTION A-A

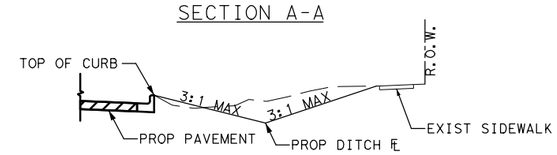

STATE OF TEXAS
ELEANOR R. RIVERA
87879
LICENSED
PROFESSIONAL ENGINEER

Eleanor R. Rivera 9-28-2020

Binkley & Barfield, Inc
consulting engineers
Texas Registration Number F-257

CEDAR PARK

ANDERSON MILL ROAD
DRAINAGE PLAN SHEETS
STA 64+00 - STA 68+50

DESIGN BY:	GCC	SCALE:	1"=40'
DRAWN BY:	DSH		
CHECKED BY:	BMB		
APPROVED BY:	BDR	SHEET:	13 OF 14
PROJECT NO:	156402		
DATE:	9/28/2020	PAGE:	117

9/28/2020
1:23:00 PM
I:\156402*Anderson*Mill*Road\CADD\SHEETS\DRDP1*Drainage*Plan*013.dgn

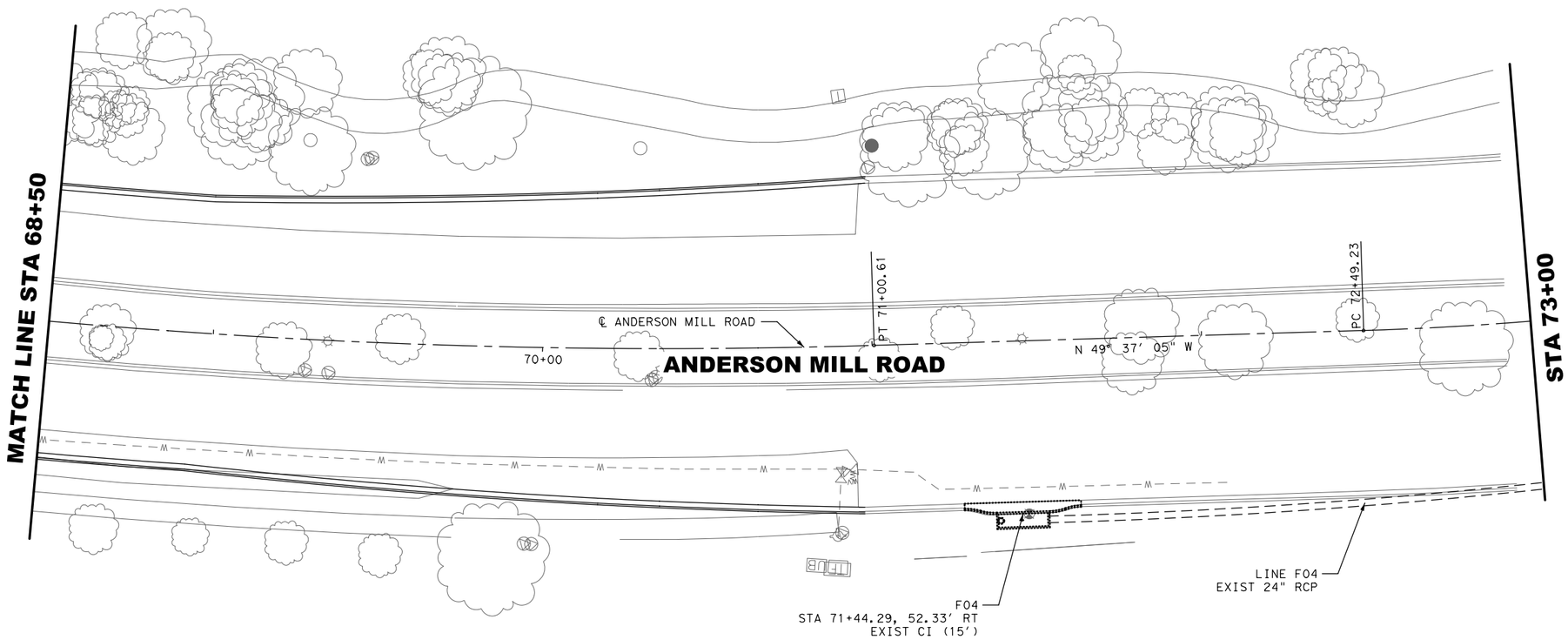

0' 10' 20' 40'

SCALE: 1"=40'

LEGEND

——X——	EXISTING UTILITY
———	EXISTING PLANIMETRICS
∘ ∘ ◄——	DITCH FLOWLINE
———	PROPOSED STORM SEWER
— — — —	EXISTING STORM SEWER
·····XXX·····	EXISTING CONTOUR
——XXX——	PROPOSED CONTOUR

NOTES:

1. CURB INLETS MEASURED FROM TOP FACE OF CURB.
2. GRATE INLETS MEASURED FROM TOP CENTER OF GRATE.
3. ALL PIPE IS CLASS III UNLESS OTHERWISE NOTED.
4. THE MATERIAL AND CONSTRUCTION PRACTICES SHALL BE IN ACCORDANCE WITH THE STANDARD SPECIFICATIONS OF THE CITY OF CEDAR PARK, CITY OF AUSTIN, AND TXDOT (WHERE APPLICABLE) AS PRESENTED IN THE LATEST EDITION, AND/OR AS OTHERWISE CONTAINED ON THE PLANS.
5. PROPOSED PIPE BEND LOCATIONS ARE APPROXIMATE. CONTRACTOR TO LOCATE PIPE PRIOR TO INSTALLATION TO DETERMINE EXACT BEND REQUIRED TO TIE TO EXISTING STORM SEWER SYSTEM.
6. CONTRACTOR TO VERIFY LOCATION AND ELEVATION OF EXISTING STRUCTURES PRIOR TO PROCEEDING WITH THE WORK. ANY DISCREPANCIES CAUSING MATERIAL CHANGES SHALL BE SENT VIA R.F.I. TO THE CITY'S REPRESENTATIVE.

NUMBER	DATE	REVISION	APPROVED

STATE OF TEXAS
ELEANOR R. RIVERA
87879
LICENSED
PROFESSIONAL ENGINEER

Eleanor R. Rivera 9-28-2020

Binkley & Barfield, Inc
consulting engineers
Texas Registration Number F-257

CEDAR PARK

ANDERSON MILL ROAD
DRAINAGE PLAN SHEETS
STA 68+50 - STA 73+00

DESIGN BY:	GCC	SCALE:	1"=40'
DRAWN BY:	DSH		
CHECKED BY:	BMB	SHEET:	14 OF 14
APPROVED BY:	BDR		
PROJECT NO:	156402	PAGE:	118
DATE:	9/28/2020		

9/28/2020
1:23:04 PM
I:\156402*Anderson*Mill*Road\CADD\SHEETS\DRDP1*Drainage*Plan*014.dgn

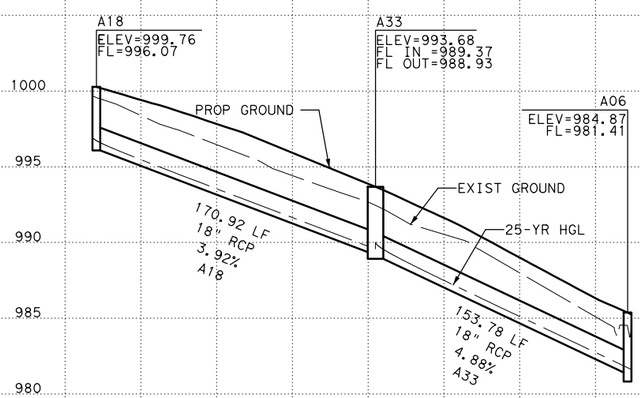

NODE A18 TO A06

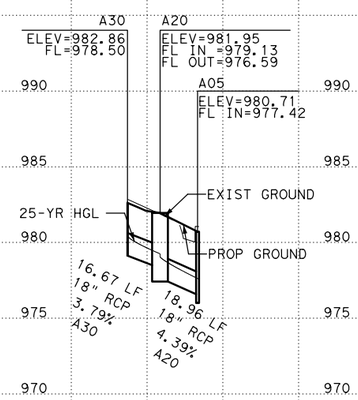

NODE A30 TO A05

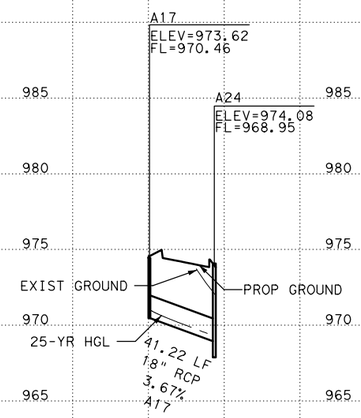

NODE A17 TO A24

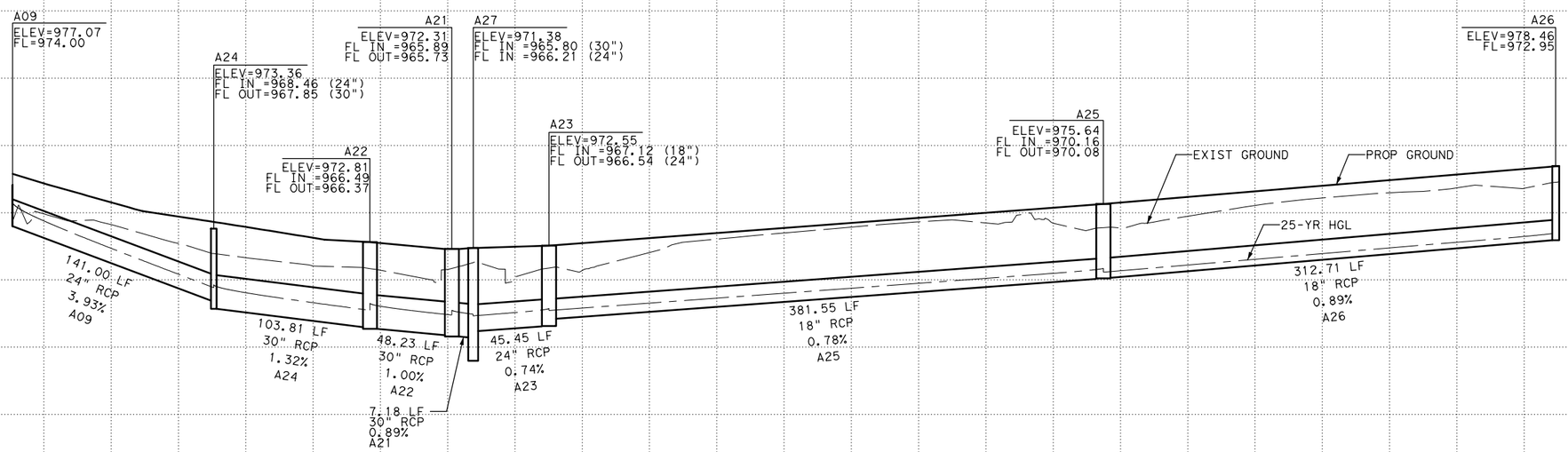

NODE A09 TO A26

HORIZ 0′ 50′ 100′

VERT 0′ 5′ 10′

NOTES:

1. CURB INLETS MEASURED FROM TOP FACE OF CURB.
2. GRATE INLETS MEASURED FROM TOP CENTER OF GRATE.
3. ALL PIPE IS CLASS III UNLESS OTHERWISE NOTED.
4. ALL PIPE IS PROPOSED UNLESS OTHERWISE NOTED.
5. EXISTING UTILITIES MAY NOT BE SHOWN. CONTRACTOR TO VERIFY PRIOR TO INSTALL.

NUMBER	DATE	REVISION	APPROVED

STATE OF TEXAS
ELEANOR R. RIVERA
87879
LICENSED
PROFESSIONAL ENGINEER

Eleanor R. Rivera 9-28-2020

Binkley & Barfield, Inc
consulting engineers
Texas Registration Number F-257

CEDAR PARK

ANDERSON MILL ROAD
DRAINAGE PROFILES

DESIGN BY:	GCC
DRAWN BY:	DSH
CHECKED BY:	BMB
APPROVED BY:	BDR
PROJECT NO:	156402
DATE:	9/28/2020

SCALE:
HORIZ: 1"=100′
VERT: 1"= 10′

SHEET: 1 OF 4

PAGE: 119

9/28/2020
1:23:10 PM
I:\156402*Anderson*Mill*Road\CADD\SHEETS\DRDP1*Drainage*Profile*001.dgn

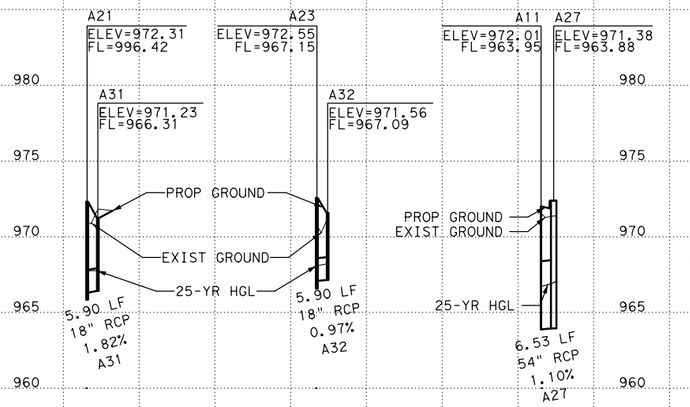

NODE A21 TO A31 NODE A23 TO A32

NODE A11 TO A27

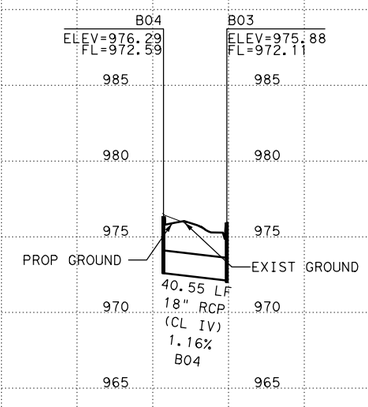

NODE B04 TO B03

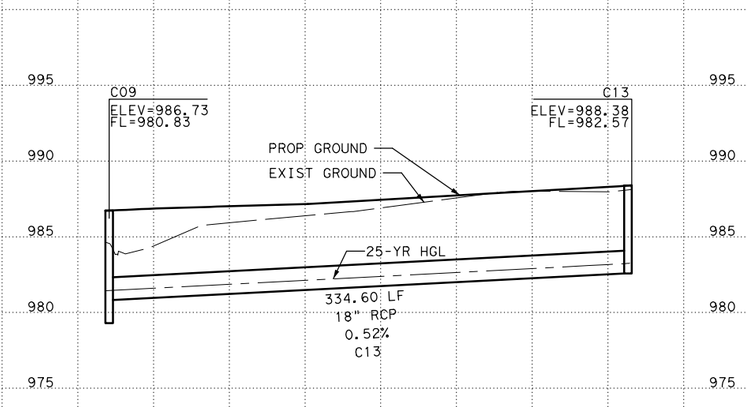

NODE C09 TO C13

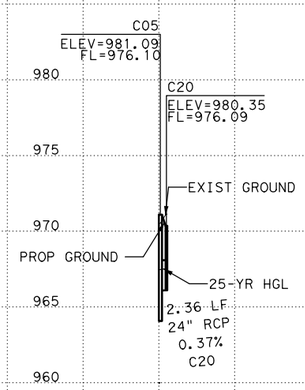

NODE C05 TO C20

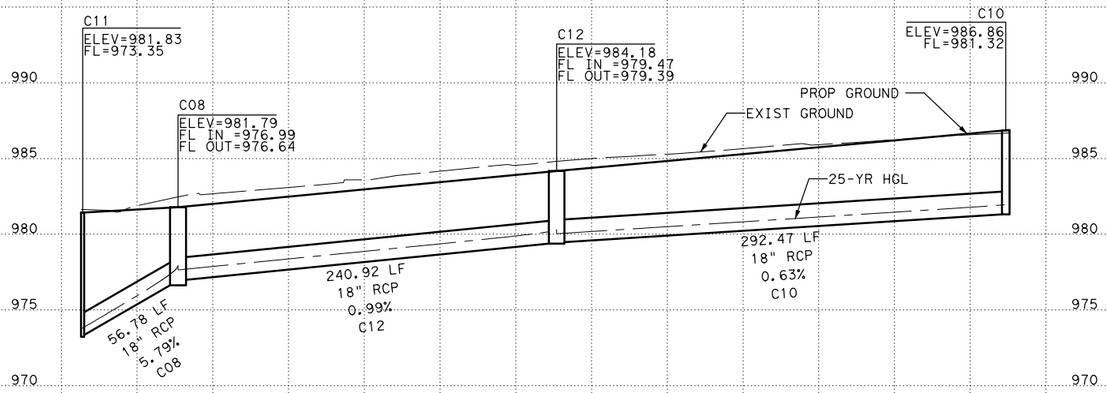

NODE C11 TO C10

HORIZ 0′ 50′ 100′

VERT 0′ 5′ 10′

NOTES:

1. CURB INLETS MEASURED FROM TOP FACE OF CURB.
2. GRATE INLETS MEASURED FROM TOP CENTER OF GRATE.
3. ALL PIPE IS CLASS III UNLESS OTHERWISE NOTED.
4. ALL PIPE IS PROPOSED UNLESS OTHERWISE NOTED.
5. EXISTING UTILITIES MAY NOT BE SHOWN. CONTRACTOR TO VERIFY PRIOR TO INSTALL.

NUMBER	DATE	REVISION	APPROVED

STATE OF TEXAS
ELEANOR R. RIVERA
87879
LICENSED
PROFESSIONAL ENGINEER

Eleanor R. Rivera 9-28-2020

Binkley & Barfield, Inc
consulting engineers
Texas Registration Number F-257

CEDAR PARK

ANDERSON MILL ROAD
DRAINAGE PROFILES

DESIGN BY:	GCC	SCALE: HORIZ: 1"=100′ VERT: 1"= 10′	
DRAWN BY:	DSH		
CHECKED BY:	BMB		
APPROVED BY:	BDR	SHEET: 2 OF 4	
PROJECT NO:	156402		
DATE:	9/28/2020	PAGE: 120	

9/28/2020
1:23:13 PM
T:\156402*Anderson*Mill*Road\CADD\SHEETS\DRDP1*Drainage*Profile*002.dgn

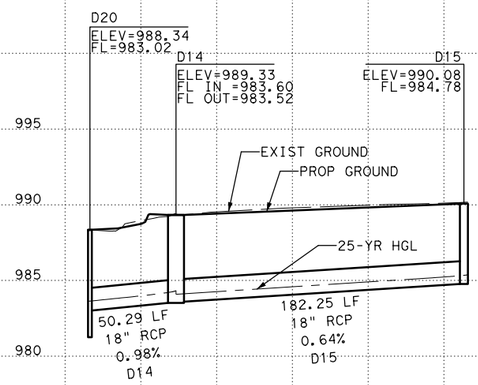

NODE D20 TO D15

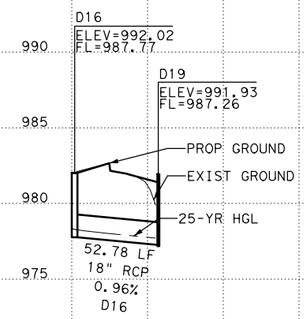

NODE D16 TO D19

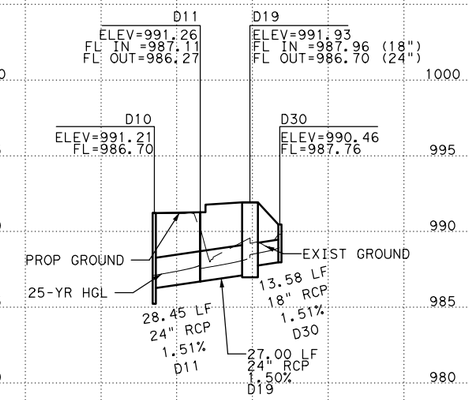

NODE D10 TO D30

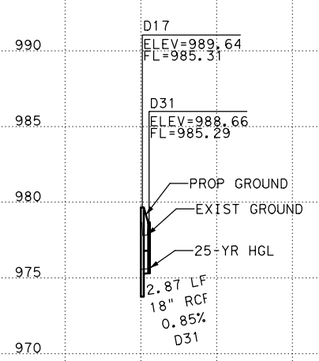

NODE D17 TO D31

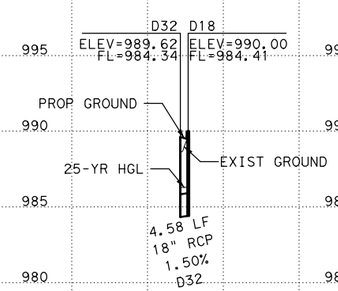

NODE D32 TO D18

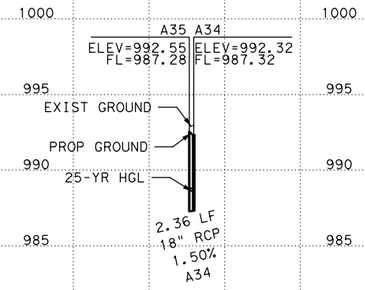

NODE A35 TO A34

HORIZ 0′ 50′ 100′

VERT 0′ 5′ 10′

NOTES:

1. CURB INLETS MEASURED FROM TOP FACE OF CURB.
2. GRATE INLETS MEASURED FROM TOP CENTER OF GRATE.
3. ALL PIPE IS CLASS III UNLESS OTHERWISE NOTED.
4. ALL PIPE IS PROPOSED UNLESS OTHERWISE NOTED.
5. EXISTING UTILITIES MAY NOT BE SHOWN. CONTRACTOR TO VERIFY PRIOR TO INSTALL.

NUMBER	DATE	REVISION	APPROVED

STATE OF TEXAS
ELEANOR R. RIVERA
87879
LICENSED
PROFESSIONAL ENGINEER

Eleanor R. Rivera 9-28-2020

Binkley & Barfield, Inc
consulting engineers
Texas Registration Number F-257

CEDAR PARK

ANDERSON MILL ROAD
DRAINAGE PROFILES

DESIGN BY: GCC
DRAWN BY: DSH
CHECKED BY: BMB
APPROVED BY: BDR
PROJECT NO: 156402
DATE: 9/28/2020

SCALE:
HORIZ: 1"=100′
VERT: 1"= 10′

SHEET: 3 OF 4

PAGE: 121

9/28/2020
1:23:16 PM
T:\156402*Anderson*Mill*Road\CADD\SHEETS\DRDP1*Drainage*Profile*003.dgn

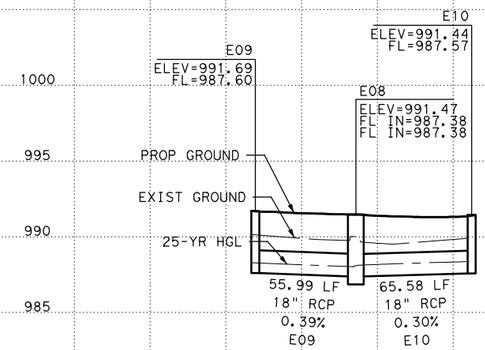

NODE E09 TO E10

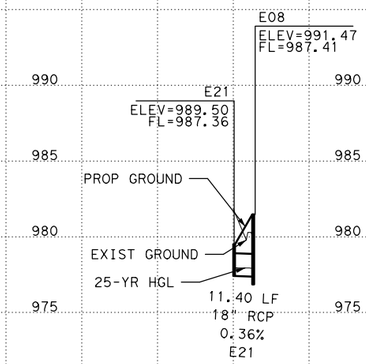

NODE E21 TO E08

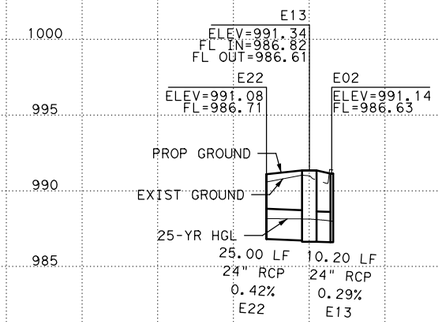

NODE E22 TO E02

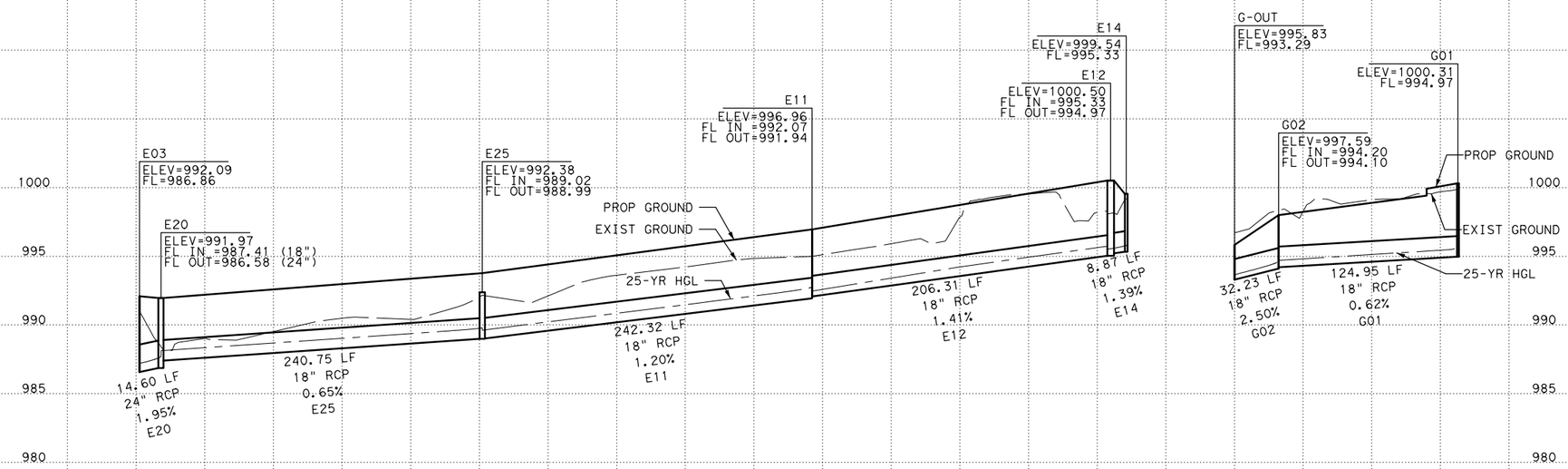

NODE E03 TO E14

NODE G-OUT TO G01

HORIZ 0′ 50′ 100′

VERT 0′ 5′ 10′

NOTES:

1. CURB INLETS MEASURED FROM TOP FACE OF CURB.
2. GRATE INLETS MEASURED FROM TOP CENTER OF GRATE.
3. ALL PIPE IS CLASS III UNLESS OTHERWISE NOTED.
4. ALL PIPE IS PROPOSED UNLESS OTHERWISE NOTED.
5. EXISTING UTILITIES MAY NOT BE SHOWN. CONTRACTOR TO VERIFY PRIOR TO INSTALL.

NUMBER	DATE	REVISION	APPROVED

STATE OF TEXAS
ELEANOR R. RIVERA
87879
LICENSED
PROFESSIONAL ENGINEER

Eleanor R. Rivera 9-28-2020

Binkley & Barfield, Inc
consulting engineers
Texas Registration Number F-257

CEDAR PARK

ANDERSON MILL ROAD
DRAINAGE PROFILES

DESIGN BY:	GCC	SCALE: HORIZ: 1"=100′ VERT: 1"= 10′	
DRAWN BY:	DSH		
CHECKED BY:	BMB		
APPROVED BY:	BDR	SHEET: 4 OF 4	
PROJECT NO:	156402		
DATE:	9/28/2020	PAGE: 122	

9/28/2020
1:23:19 PM
I:\156402*Anderson*Mill*Road\CADD\SHEETS\DRDP1*Drainage*Profile*004.dgn

DRAINAGE AREA CONFIGURATION DATA

AREA ID	DRAINAGE AREA (ac)	TIME OF CONC (min)	TIME OF CONC USED (min)	C-VALUE 25 YR	C-VALUE 100 YR	INTENSITY 25 YR (in/hr)	DISCHARGE 25 YR (cfs)	INTENSITY 100 YR (in/hr)	DISCHARGE 100 YR (cfs)
A01	0.465	3.34	5	0.719	0.804	9.458	3.159	12.035	4.495
A06	0.506	4.17	5	0.52	0.596	9.458	2.487	12.035	3.628
A07	1.525	16.76	16.76	0.554	0.629	6.485	5.479	8.503	8.157
A12	19.73	15	15	0.559	0.63	6.794	74.929	8.882	110.4
A15	0.98	3.75	5	0.569	0.648	9.458	5.277	12.035	7.647
A17	0.413	2.6	5	0.713	0.797	9.458	2.784	12.035	3.96
A18	0.585	3.06	5	0.602	0.683	9.458	3.332	12.035	4.811
A19	0.869	3.55	5	0.601	0.68	9.458	4.938	12.035	7.109
A20	0.73	12.58	12.58	0.789	0.876	7.277	4.188	9.468	6.05
A21	0.091	0.77	5	0.86	0.95	9.458	0.737	12.035	1.036
A22	0.544	3.15	5	0.772	0.858	9.458	3.974	12.035	5.621
A23	0.449	3.79	5	0.825	0.914	9.458	3.501	12.035	4.935
A25	0.245	5.5	5.5	0.813	0.902	9.269	1.846	11.819	2.611
A26	0.321	5.41	5.41	0.734	0.82	9.303	2.191	11.857	3.12
A31	0.698	9.46	9.46	0.438	0.51	8.026	2.452	10.364	3.687
A32	2.921	17.96	17.96	0.437	0.512	6.291	8.031	8.265	12.361
A33	0.194	1.69	5	0.85	0.94	9.458	1.561	12.035	2.196
A34	1.101	12.04	12.04	0.746	0.855	7.395	6.074	9.611	9.047
B03	0.675	4.46	5	0.659	0.742	9.458	4.205	12.035	6.025
B04	0.25	5	5	0.523	0.601	9.458	1.236	12.035	1.807
C01	4.15	12	12	0.58	0.65	7.404	17.821	9.621	25.954
C06	9.29	15	15	0.49	0.54	6.794	30.926	8.882	44.556
C07	0.542	4.56	5	0.705	0.79	9.458	3.615	12.035	5.154
C08	0.309	3.12	5	0.622	0.688	9.458	1.819	12.035	2.561
C09	0.581	3.52	5	0.625	0.661	9.458	3.434	12.035	4.621
C10	0.4	4.19	5	0.78	0.868	9.458	2.953	12.035	4.181
C12	0.356	3.14	5	0.637	0.719	9.458	2.145	12.035	3.081
C13	0.505	2.81	5	0.66	0.705	9.458	3.151	12.035	4.283
C20	3.161	7.03	7.03	0.516	0.591	8.741	14.258	11.206	20.935
C21	0.81	10.43	10.43	0.504	0.578	7.775	3.174	10.066	4.713
D05	0.276	4.31	5	0.833	0.922	9.458	2.174	12.035	3.062
D07	2.072	7.16	7.16	0.613	0.692	8.699	11.049	11.157	15.998
D08	3.58	7	7	0.578	0.65	8.751	18.107	11.217	26.102
D12	1.84	10	10	0.603	0.67	7.884	8.747	10.196	12.57
D14	0.249	2.23	5	0.725	0.81	9.458	1.704	12.035	2.423
D15	0.426	3.68	5	0.584	0.665	9.458	2.351	12.035	3.406
D16	0.398	6.34	6.34	0.648	0.731	8.971	2.314	11.473	3.339
D17	1.3	3.39	5	0.595	0.674	9.458	7.315	12.035	10.544
D18	1.432	9.96	9.96	0.565	0.642	7.894	6.389	10.208	9.387
D19	0.27	3.95	5	0.818	0.906	9.458	2.086	12.035	2.94
D30	2.004	12.73	12.73	0.438	0.513	7.244	6.359	9.429	9.694
D31	0.151	4.81	5	0.567	0.645	9.458	0.812	12.035	1.176
E06	1.507	5.55	5.548	0.511	0.548	9.252	7.123	11.798	9.741
E08	0.153	5	5	0.706	0.79	9.458	1.025	12.035	1.459
E09	0.435	5	5	0.705	0.79	9.458	2.899	12.035	4.134
E10	0.423	5.18	5.18	0.842	0.932	9.389	3.34	11.956	4.708
E11	0.333	2.94	5	0.681	0.763	9.458	2.144	12.035	3.057
E12	0.197	6.15	6.15	0.758	0.859	9.036	1.352	11.549	1.959
E13	1.354	13.43	13.43	0.522	0.526	7.099	5.015	9.252	6.587
E14	0.446	11.1	11.1	0.481	0.555	7.612	1.633	9.871	2.444
E20	0.405	10.82	10.824	0.469	0.542	7.678	1.457	9.95	2.182
E21	0.462	5	5	0.42	0.36	9.458	1.835	12.035	2.001
E24	2.2	10	10	0.57	0.64	7.884	9.886	10.196	14.356
F02	1.59	5	5	0.724	0.809	9.458	10.886	12.035	15.478
F04	1.845	14.15	14.15	0.497	0.574	6.955	6.377	9.078	9.614
G01	0.251	1.39	5	0.91	0.827	9.458	2.159	12.035	2.496

NOTES:

1. AREA HYDROLOGY WAS CALCULATED IN GEOPAK DRAINAGE USING THE RATIONAL METHOD.
2. INTENSITIES CALCULATED USING WILLLIAMSON COUNTY VALUES.

NUMBER	DATE	REVISION	APPROVED

STATE OF TEXAS
ELEANOR R. RIVERA
87879
LICENSED
PROFESSIONAL ENGINEER

Eleanor R. Rivera 9-28-2020

Binkley & Barfield, Inc
consulting engineers
Texas Registration Number F-257

CEDAR PARK

ANDERSON MILL ROAD
HYDROLOGIC CALCULATIONS
AREAS

DESIGN BY: GCC
DRAWN BY: DSH
CHECKED BY: BMB
APPROVED BY: BDR
PROJECT NO: 156402
DATE: 9/28/2020

SCALE:

SHEET: 1 OF 8

PAGE: 123

9/28/2020
1:23:21 PM
I:\156402*Anderson*Mill*Road\CADD\SHEETS\DRCP1*Drainage*Calcs*01.dgn

25 YEAR ON GRADE INLET AND SAG CONFIGURATION DATA

INLET ID	INLET STATION	INLET OFFSET	INLET TYPE	INLET PROFILE TYPE	PROP/ EXIST	INLET DISCHARGE (cfs)	INLET CAPACITY (cfs)	INLET BYPASS FLOW (cfs)	INLET BYPASS NODE	INLET LONGITUDINAL SLOPE (ft/ft)	INLET LENGTH (ft)	GUTTER N	GUTTER DEPRESSION (ft)	ELEVATION (ft)	REQUIRED LENGTH (ft)	GRATE AREA (sf)	GRATE PERIMETER (ft)	COMPUTED INLET POND DEPTH (ft)	INLET MAX POND DEPTH (ft)	COMPUTED INLET POND WIDTH (ft)	INLET MAX POND WIDTH (ft)
A01	11+56.65	97.68	Curb	On Grade	EXIST	3.16	3.16	0.00	A19	1.40	10.00	0.016	0.58	1003.19	10.04	n/a	n/a	0.21	0.50	10.44	23.00
A05	16+63.90	45.58	Junction	On Grade	EXIST	1.56	1.42	0.00		4.42	n/a	0.015	n/a	980.71	13.60	n/a	n/a	0.13	0.50	6.30	20.00
A06	15+79.00	-42.43	Curb	On Grade	PROP	2.49	2.45	0.04	A17	4.37	10.00	0.016	0.58	985.37	11.15	n/a	n/a	0.15	0.50	7.71	29.00
A07	16+77.06	91.90	Curb	Sag	EXIST	5.48	10.33	0.00		n/a	10.00	0.015	0.58	979.25	13.60	n/a	n/a	0.33	0.50	16.38	20.00
A15	20+82.34	-9.58	Curb	Sag	EXIST	5.28	14.39	0.00		n/a	15.00	0.015	0.58	972.00	13.60	n/a	n/a	0.26	0.50	12.81	20.00
A17	18+93.94	0.87	Curb	On Grade	PROP	2.83	2.83	0.00	A15	1.53	10.00	0.016	0.58	974.45	9.59	n/a	n/a	0.20	0.50	9.84	25.00
A18	12+23.08	-44.09	Curb	On Grade	PROP	3.33	3.20	0.13	A33	2.77	10.00	0.016	0.58	1000.27	12.00	n/a	n/a	0.19	0.50	9.37	31.00
A19	12+03.59	42.00	Curb	On Grade	PROP	4.94	4.19	0.75	A20	3.02	10.00	0.016	0.58	1000.45	15.42	n/a	n/a	0.21	0.50	10.68	29.00
A20	16+38.09	49.50	Curb	On Grade	PROP	4.94	3.27	1.67	A22	4.34	10.00	0.016	0.33	981.95	22.12	n/a	n/a	0.20	0.50	9.98	29.00
A21	20+79.17	42.00	Curb	Sag	PROP	1.34	10.33	0.00		n/a	10.00	0.015	0.58	972.31	13.60	n/a	n/a	0.13	0.50	6.42	15.00
A22	20+18.31	42.00	Curb	On Grade	PROP	5.65	5.04	0.61	A21	1.37	10.00	0.016	0.58	972.82	14.08	n/a	n/a	0.26	0.50	13.03	29.00
A23	21+51.38	42.00	Curb	On Grade	PROP	3.57	3.57	0.00	A21	0.21	10.00	0.016	0.58	972.55	7.19	n/a	n/a	0.31	0.50	15.56	0.00
A24	19+02.31	45.85	Junction	On Grade	PROP	1.56	1.42	0.00		1.54	n/a	0.015	n/a	974.08	13.60	n/a	n/a	0.13	0.50	6.30	15.00
A25	25+63.32	42.00	Curb	On Grade	PROP	1.85	1.85	0.00	A23	0.69	10.00	0.016	0.58	975.64	6.28	n/a	n/a	0.20	0.50	9.74	29.00
A26	29+02.09	42.00	Curb	On Grade	PROP	2.19	2.19	0.00	A25	1.57	10.00	0.016	0.58	978.46	8.30	n/a	n/a	0.18	0.50	8.91	15.00
A27	20+95.00	46.00	Junction	On Grade	PROP	1.56	1.42	0.00		0.23	n/a	0.015	n/a	972.38	13.60	n/a	n/a	0.13	0.50	6.30	0.00
A31	20+79.17	51.50	Grate	Sag	PROP	2.45	11.09	0.00		n/a	4.00	0.033	n/a	971.23	n/a	5.10	6.40	0.40	1.08	2.47	20.00
A32	21+51.30	51.50	Grate	Sag	PROP	8.03	3.70	0.00		n/a	4.00	0.033	n/a	971.56	n/a	5.10	6.40	0.87	0.52	4.02	15.00
A33	14+09.97	-40.94	Curb	On Grade	PROP	1.69	1.69	0.00	A06	4.59	10.00	0.016	0.58	993.68	9.00	n/a	n/a	0.13	0.50	6.62	29.00
A34	14+14.99	48.29	Grate	Sag	PROP	6.07	5.18	0.00		n/a	4.00	0.033	n/a	992.32	n/a	5.10	6.40	0.72	0.65	3.33	10.00
B03	26+21.84	-9.45	Curb	On Grade	EXIST	4.21	4.14	0.07	A23	1.03	10.00	0.016	0.58	975.88	11.12	n/a	n/a	0.25	0.50	12.31	16.00
B04	26+21.58	-50.00	Curb	On Grade	PROP	1.24	1.24	0.00	QM	0.46	10.00	0.016	0.58	976.29	4.54	n/a	n/a	0.18	0.50	9.05	26.00
C05	32+30.48	45.54	Junction	On Grade	EXIST	1.56	1.42	0.00		0.74	n/a	0.015	n/a	981.10	13.60	n/a	n/a	0.13	0.50	6.30	15.00
C07	32+67.33	42.00	Curb	On Grade	PROP	3.62	3.62	0.00	A26	0.74	10.00	0.016	0.58	982.22	9.48	n/a	n/a	0.25	0.50	12.39	29.00
C08	32+94.78	-49.42	Curb	On Grade	PROP	1.82	1.82	0.00	Pas	1.09	10.00	0.016	0.33	981.79	9.15	n/a	n/a	0.18	0.50	8.90	29.00
C09	38+45.09	42.00	Curb	On Grade	PROP	4.89	4.89	0.01	C07	0.47	10.00	0.016	0.58	986.73	10.26	n/a	n/a	0.30	0.50	15.12	29.00
C10	38+43.69	-42.00	Curb	On Grade	PROP	2.95	2.95	0.00	C08	0.47	10.00	0.016	0.58	986.86	7.61	n/a	n/a	0.25	0.50	12.51	29.00
C11	32+30.81	-52.00	Junction	On Grade	PROP	1.56	1.42	0.00		0.74	n/a	0.015	n/a	981.43	13.60	n/a	n/a	0.13	1.00	6.30	0.00
C12	35+44.70	-49.41	Curb	On Grade	PROP	2.15	2.15	0.00	C08	0.94	10.00	0.016	0.33	984.18	9.74	n/a	n/a	0.20	0.50	9.73	29.00
C13	41+92.58	50.00	Curb	On Grade	PROP	8.55	7.09	1.46	C09	0.80	10.00	0.016	0.58	988.38	15.99	n/a	n/a	0.34	0.50	16.85	29.00
C20	32+30.43	51.00	Grate	Sag	PROP	14.26	13.81	0.00		n/a	4.00	0.033	n/a	980.35	n/a	5.10	6.40	1.28	1.25	4.58	16.00
C21	38+50.09	51.50	Grate	Sag	PROP	3.17	15.84	0.00		n/a	4.00	0.033	n/a	985.21	n/a	5.10	6.40	0.47	1.37	2.26	18.00
D02	42+88.55	45.78	Junction	On Grade	EXIST	1.56	1.42	0.00		0.53	n/a	0.015	n/a	989.16	13.60	n/a	n/a	0.13	0.50	6.30	15.00
D05	42+62.61	138.26	Curb	On Grade	EXIST	2.17	2.17	0.00	C13	2.20	10.00	0.016	0.58	991.53	8.88	n/a	n/a	0.17	0.50	8.34	13.00
D07	43+13.62	139.85	Curb	On Grade	EXIST	11.05	7.05	4.00	C13	2.20	10.00	0.016	0.58	991.15	23.17	n/a	n/a	0.31	0.50	15.33	16.00
D10	47+75.23	45.57	Junction	On Grade	EXIST	1.56	1.42	0.00		0.92	n/a	0.015	n/a	991.21	13.60	n/a	n/a	0.13	0.50	6.30	15.00
D14	43+37.25	-49.42	Curb	On Grade	PROP	1.70	1.70	0.00	GF	0.39	10.00	0.016	0.33	989.33	7.02	n/a	n/a	0.21	0.50	10.52	29.00
D15	45+30.00	-49.42	Curb	On Grade	PROP	2.35	2.35	0.00	D14	0.46	10.00	0.016	0.33	990.08	8.75	n/a	n/a	0.23	0.50	11.52	29.00
D16	48+55.00	-11.00	Curb	On Grade	PROP	2.31	2.31	0.00	D15	0.25	10.00	0.016	0.58	992.02	5.76	n/a	n/a	0.26	0.50	12.85	16.00
D17	43+49.57	42.00	Curb	On Grade	PROP	7.56	6.16	1.40	C13	0.39	10.00	0.016	0.33	989.64	16.44	n/a	n/a	0.37	0.50	18.37	29.00
D18	45+49.64	50.00	Curb	On Grade	PROP	6.39	6.14	0.25	D17	0.46	10.00	0.016	0.58	990.00	11.96	n/a	n/a	0.34	0.50	16.75	29.00
D19	48+39.49	42.00	Curb	On Grade	PROP	2.09	2.09	0.00	D18	0.28	10.00	0.016	0.58	991.93	5.54	n/a	n/a	0.24	0.50	12.12	29.00
D20	42+79.27	-52.00	Junction	On Grade	PROP	1.56	1.42	0.00		0.73	n/a	0.015	n/a	988.34	13.60	n/a	n/a	0.13	0.50	6.30	15.00
D30	48+60.17	46.87	Grate	Sag	PROP	6.36	16.39	0.00		n/a	4.00	0.033	n/a	990.46	n/a	5.10	6.40	0.75	1.43	2.59	10.00
D31	43+49.57	47.90	Grate	Sag	PROP	0.81	10.18	0.00		n/a	4.00	0.033	n/a	988.66	n/a	5.10	6.40	0.19	1.02	1.08	10.00
E01	57+25.35	50.21	Junction	On Grade	EXIST	1.56	1.42	0.00		1.20	n/a	0.015	n/a	991.47	13.60	n/a	n/a	0.13	0.50	6.30	0.00
E02	56+93.44	45.07	Junction	On Grade	EXIST	1.56	1.42	0.00		0.40	n/a	0.015	n/a	991.14	13.60	n/a	n/a	0.13	0.50	6.30	0.00
E04	57+25.44	11.33	Junction	On Grade	PROP	1.56	1.42	0.00		1.20	n/a	0.015	n/a	991.16	13.60	n/a	n/a	0.13	0.50	6.30	0.00
E06	57+61.29	9.43	Curb	Sag	EXIST	7.12	14.39	0.00		n/a	15.00	0.015	0.58	990.90	13.60	n/a	n/a	0.31	0.50	0.00	16.00
E08	57+25.80	-42.00	Curb	Sag	PROP	1.03	10.33	0.00		n/a	10.00	0.016	0.58	991.47	5.01	n/a	n/a	0.11	0.50	6.88	18.00
E09	56+56.76	-42.00	Curb	On Grade	PROP	2.90	2.90	0.00	E08	0.76	10.00	0.016	0.58	991.69	8.36	n/a	n/a	0.23	0.50	11.34	29.00
E10	58+04.86	-42.00	Curb	On Grade	PROP	3.34	3.34	0.00	E08	0.71	10.00	0.016	0.58	991.44	8.96	n/a	n/a	0.24	0.50	12.11	29.00
E11	62+40.20	50.00	Curb	On Grade	PROP	2.14	2.14	0.00	E06	1.38	10.00	0.016	0.58	996.96	7.97	n/a	n/a	0.18	0.50	9.05	29.00
E12	64+55.25	42.00	Curb	On Grade	PROP	1.35	1.35	0.00	C08	1.27	10.00	0.016	0.58	1000.51	5.97	n/a	n/a	0.16	0.50	7.74	29.00
E13	56+77.83	49.50	Curb	Sag	PROP	5.02	10.33	0.00		n/a	10.00	0.015	0.33	991.34	13.60	n/a	n/a	0.31	0.50	15.45	0.00
E14	64+70.00	46.96	Grate	Sag	PROP	1.63	9.15	0.00		n/a	4.00	0.033	n/a	999.54	n/a	5.10	6.40	0.30	0.95	2.03	10.00
E20	57+66.01	47.98	Grate	Sag	PROP	1.46	14.81	0.00		n/a	4.00	0.033	n/a	991.97	n/a	5.10	6.40	0.28	1.31	1.97	15.00
E21	57+25.70	-57.00	Grate	Sag	PROP	1.84	19.19	0.00		n/a	4.00	0.033	n/a	989.50	n/a	5.10	6.40	0.33	1.96	2.70	32.00
E25	60+00.00	47.30	Junction	On Grade	PROP	1.56	1.42	0.00		1.33	n/a	0.015	n/a	992.38	13.60	n/a	n/a	0.13	1.00	6.30	0.00
F01	75+32.47	-54.01	Junction	On Grade	PROP	1.56	1.42	0.00		0.00	n/a	0.015	n/a	990.58	13.60	n/a	n/a	0.13	1.00	6.30	16.00
F02	74+96.84	-54.42	Curb	Sag	PROP	10.89	12.34	0.00		n/a	15.00	0.015	0.58	990.58	13.60	n/a	n/a	0.29	0.50	14.59	28.00
F03	74+96.39	50.93	Curb	Sag	PROP	12.27	12.34	0.00		n/a	15.00	0.015	0.58	990.58	13.60	n/a	n/a	0.37	0.50	18.53	36.00
F04	71+44.29	52.33	Curb	On Grade	EXIST	6.38	6.38	0.00	F03	1.30	15.00	0.016	0.58	996.38	14.96	n/a	n/a	0.28	0.50	13.77	37.00
G01	64+58.71	-50.00	Curb	On Grade	PROP	2.16	2.16	0.00	Zep	1.34	10.00	0.016	0.58	1000.31	7.95	n/a	n/a	0.18	0.50	9.13	31.00

NOTES:

1. INLET DATA WAS CALCULATED IN GEOPAK DRAINAGE.

NUMBER	DATE	REVISION	APPROVED

STATE OF TEXAS
ELEANOR R. RIVERA
87879
LICENSED
PROFESSIONAL ENGINEER

Eleanor R. Rivera 9-28-2020

Binkley & Barfield, Inc
consulting engineers
Texas Registration Number F-257

CEDAR PARK

ANDERSON MILL ROAD
HYDRAULIC CALCULATIONS
NODES

DESIGN BY: GCC
DRAWN BY: DSH
CHECKED BY: BMB
APPROVED BY: BDR
PROJECT NO: 156402
DATE: 9/28/2020

SCALE:

SHEET: 2 OF 8

PAGE: 124

9/28/2020
1:23:27 PM
I:\156402*Anderson*Mill*Road\CADD\SHEETS\DRCP1*Drainage*Calcs*02.dgn

100 YEAR ON GRADE INLET AND SAF CONFIGURATION DATA

INLET ID	INLET STATION	INLET OFFSET	INLET TYPE	INLET PROFILE TYPE	PROP/ EXIST	INLET DISCHARGE (cfs)	INLET CAPACITY (cfs)	INLET BYPASS FLOW (cfs)	INLET BYPASS NODE	INLET LONGITUDINAL SLOPE (ft/ft)	INLET LENGTH (ft)	GUTTER N	GUTTER DEPRESSION (ft)	ELEVATION (ft)	REQUIRED LENGTH (ft)	GRATE AREA (sf)	GRATE PERIMETER (ft)	COMPUTED INLET POND DEPTH (ft)	INLET MAX POND DEPTH (ft)	COMPUTED INLET POND WIDTH (ft)	INLET MAX POND WIDTH (ft)
A01	11+56.65	97.68	Curb	On Grade	EXIST	4.50	4.27	0.23	A19	1.40	10.00	0.016	0.58	1003.19	12.36	n/a	n/a	0.24	0.50	11.91	23.00
A05	16+63.90	45.58	Junction	On Grade	EXIST	1.56	1.42	0.00		4.42	n/a	0.015	n/a	980.71	13.60	n/a	n/a	0.13	0.50	6.30	20.00
A06	15+79.00	-42.43	Curb	On Grade	PROP	3.76	3.34	0.42	A17	4.37	10.00	0.016	0.58	985.37	14.21	n/a	n/a	0.18	0.50	9.00	29.00
A07	16+77.06	91.90	Curb	Sag	EXIST	8.16	10.33	0.00		n/a	10.00	0.015	0.58	979.25	13.60	n/a	n/a	0.43	0.50	21.36	20.00
A15	20+82.34	-9.58	Curb	Sag	EXIST	7.88	14.39	0.00		n/a	15.00	0.015	0.58	972.00	13.60	n/a	n/a	0.34	0.50	16.73	20.00
A17	18+93.94	0.87	Curb	On Grade	PROP	4.38	4.15	0.23	A15	1.53	10.00	0.016	0.58	974.45	12.42	n/a	n/a	0.23	0.50	11.60	25.00
A18	12+23.08	-44.09	Curb	On Grade	PROP	4.81	4.16	0.65	A33	2.77	10.00	0.016	0.58	1000.27	14.90	n/a	n/a	0.22	0.50	10.76	31.00
A19	12+03.59	42.00	Curb	On Grade	PROP	7.34	5.33	2.01	A20	3.02	10.00	0.016	0.58	1000.45	19.48	n/a	n/a	0.25	0.50	12.39	29.00
A20	16+38.09	49.50	Curb	On Grade	PROP	8.06	4.26	3.80	A22	4.34	10.00	0.016	0.33	981.95	29.30	n/a	n/a	0.24	0.50	11.99	29.00
A21	20+79.17	42.00	Curb	Sag	PROP	3.50	10.33	0.00		n/a	10.00	0.015	0.58	972.31	13.60	n/a	n/a	0.24	0.50	12.16	15.00
A22	20+18.31	42.00	Curb	On Grade	PROP	9.42	6.96	2.47	A21	1.37	10.00	0.016	0.58	972.82	19.04	n/a	n/a	0.32	0.50	15.78	29.00
A23	21+51.38	42.00	Curb	On Grade	PROP	5.52	5.52	0.00	A21	0.21	10.00	0.016	0.58	972.55	9.29	n/a	n/a	0.37	0.50	18.31	0.00
A24	19+02.31	45.85	Junction	On Grade	PROP	1.56	1.42	0.00		1.54	n/a	0.015	n/a	974.08	13.60	n/a	n/a	0.13	0.50	6.30	15.00
A25	25+63.32	42.00	Curb	On Grade	PROP	2.70	2.70	0.00	A23	0.69	10.00	0.016	0.58	975.64	7.86	n/a	n/a	0.23	0.50	11.23	29.00
A26	29+02.09	42.00	Curb	On Grade	PROP	3.76	3.67	0.09	A25	1.57	10.00	0.016	0.58	978.46	11.41	n/a	n/a	0.22	0.50	10.90	15.00
A27	20+95.00	46.00	Junction	On Grade	PROP	1.56	1.42	0.00		0.23	n/a	0.015	n/a	972.38	13.60	n/a	n/a	0.13	0.50	6.30	0.00
A31	20+79.17	51.50	Grate	Sag	PROP	3.69	11.09	0.00		n/a	4.00	0.033	n/a	971.23	n/a	5.10	6.40	0.52	1.08	2.88	20.00
A32	21+51.30	51.50	Grate	Sag	PROP	12.36	3.70	0.00		n/a	4.00	0.033	n/a	971.56	n/a	5.10	6.40	1.16	0.52	4.73	15.00
A33	14+09.97	-40.94	Curb	On Grade	PROP	2.85	2.72	0.13	A06	4.59	10.00	0.016	0.58	993.68	12.20	n/a	n/a	0.16	0.50	8.04	29.00
A34	14+14.99	48.29	Grate	Sag	PROP	9.05	5.18	0.00		n/a	4.00	0.033	n/a	992.32	n/a	5.10	6.40	0.94	0.65	3.87	10.00
B03	26+21.84	-9.45	Curb	On Grade	EXIST	6.03	5.44	0.58	A23	1.03	10.00	0.016	0.58	975.88	13.75	n/a	n/a	0.28	0.50	14.09	16.00
B04	26+21.58	-50.00	Curb	On Grade	PROP	1.81	1.81	0.00	QM	0.46	10.00	0.016	0.58	976.29	5.68	n/a	n/a	0.21	0.50	10.44	26.00
C05	32+30.48	45.54	Junction	On Grade	EXIST	1.56	1.42	0.00		0.74	n/a	0.015	n/a	981.10	13.60	n/a	n/a	0.13	0.50	6.30	15.00
C07	32+67.33	42.00	Curb	On Grade	PROP	6.76	6.12	0.64	A26	0.74	10.00	0.016	0.58	982.22	13.70	n/a	n/a	0.31	0.50	15.66	29.00
C08	32+94.78	-49.42	Curb	On Grade	PROP	2.68	2.62	0.06	Pas	1.09	10.00	0.016	0.33	981.79	11.44	n/a	n/a	0.21	0.50	10.30	29.00
C09	38+45.09	42.00	Curb	On Grade	PROP	10.05	8.44	1.61	C07	0.47	10.00	0.016	0.58	986.73	15.65	n/a	n/a	0.40	0.50	19.79	29.00
C10	38+43.69	-42.00	Curb	On Grade	PROP	4.18	4.18	0.00	C08	0.47	10.00	0.016	0.58	986.86	9.35	n/a	n/a	0.29	0.50	14.25	29.00
C11	32+30.81	-52.00	Junction	On Grade	PROP	1.56	1.42	0.00		0.74	n/a	0.015	n/a	981.43	13.60	n/a	n/a	0.13	1.00	6.30	0.00
C12	35+44.70	-49.41	Curb	On Grade	PROP	3.08	2.96	0.12	C08	0.94	10.00	0.016	0.33	984.18	11.99	n/a	n/a	0.22	0.50	11.14	29.00
C13	41+92.58	50.00	Curb	On Grade	PROP	15.48	10.06	5.42	C09	0.80	10.00	0.016	0.58	988.38	22.65	n/a	n/a	0.42	0.50	21.05	29.00
C20	32+30.43	51.00	Grate	Sag	PROP	20.94	13.81	0.00		n/a	4.00	0.033	n/a	980.35	n/a	5.10	6.40	2.33	1.25	7.00	16.00
C21	38+50.09	51.50	Grate	Sag	PROP	4.71	15.84	0.00		n/a	4.00	0.033	n/a	985.21	n/a	5.10	6.40	0.61	1.37	2.62	18.00
D02	42+88.55	45.78	Junction	On Grade	EXIST	1.56	1.42	0.00		0.53	n/a	0.015	n/a	989.16	13.60	n/a	n/a	0.13	0.50	6.30	15.00
D05	42+62.61	138.26	Curb	On Grade	EXIST	3.06	3.03	0.03	C13	2.20	10.00	0.016	0.58	991.53	10.86	n/a	n/a	0.19	0.50	9.48	13.00
D07	43+13.62	139.85	Curb	On Grade	EXIST	16.00	8.57	7.43	C13	2.20	10.00	0.016	0.58	991.15	28.80	n/a	n/a	0.35	0.50	17.61	16.00
D10	47+75.23	45.57	Junction	On Grade	EXIST	1.56	1.42	0.00		0.92	n/a	0.015	n/a	991.21	13.60	n/a	n/a	0.13	0.50	6.30	15.00
D14	43+37.25	-49.42	Curb	On Grade	PROP	2.46	2.46	0.00	GF	0.39	10.00	0.016	0.33	989.33	8.66	n/a	n/a	0.24	0.50	12.06	29.00
D15	45+30.00	-49.42	Curb	On Grade	PROP	3.41	3.37	0.03	D14	0.46	10.00	0.016	0.33	990.08	10.82	n/a	n/a	0.27	0.50	13.24	29.00
D16	48+55.00	-11.00	Curb	On Grade	PROP	3.34	3.34	0.00	D15	0.25	10.00	0.016	0.58	992.02	7.15	n/a	n/a	0.30	0.50	14.75	16.00
D17	43+49.57	42.00	Curb	On Grade	PROP	11.84	8.10	3.74	C13	0.39	10.00	0.016	0.33	989.64	21.15	n/a	n/a	0.44	0.50	21.73	29.00
D18	45+49.64	50.00	Curb	On Grade	PROP	9.39	8.09	1.30	D17	0.46	10.00	0.016	0.58	990.00	14.99	n/a	n/a	0.39	0.50	19.35	29.00
D19	48+39.49	42.00	Curb	On Grade	PROP	2.94	2.94	0.00	D18	0.28	10.00	0.016	0.58	991.93	6.78	n/a	n/a	0.28	0.50	13.78	29.00
D20	42+79.27	-52.00	Junction	On Grade	PROP	1.56	1.42	0.00		0.73	n/a	0.015	n/a	988.34	13.60	n/a	n/a	0.13	0.50	6.30	15.00
D30	48+60.17	46.87	Grate	Sag	PROP	9.69	16.39	0.00		n/a	4.00	0.033	n/a	990.46	n/a	5.10	6.40	0.99	1.43	3.04	10.00
D31	43+49.57	47.90	Grate	Sag	PROP	1.18	10.18	0.00		n/a	4.00	0.033	n/a	988.66	n/a	5.10	6.40	0.24	1.02	1.24	10.00
E01	57+25.35	50.21	Junction	On Grade	EXIST	1.56	1.42	0.00		1.20	n/a	0.015	n/a	991.47	13.60	n/a	n/a	0.13	0.50	6.30	0.00
E02	56+93.44	45.07	Junction	On Grade	EXIST	1.56	1.42	0.00		0.40	n/a	0.015	n/a	991.14	13.60	n/a	n/a	0.13	0.50	6.30	0.00
E04	57+25.44	11.33	Junction	On Grade	PROP	1.56	1.42	0.00		1.20	n/a	0.015	n/a	991.16	13.60	n/a	n/a	0.13	0.50	6.30	0.00
E06	57+61.29	9.43	Curb	Sag	EXIST	9.74	12.34	0.00		n/a	15.00	0.015	0.58	990.90	13.60	n/a	n/a	0.23	0.50	0.00	16.00
E08	57+25.80	-42.00	Curb	Sag	PROP	1.53	10.33	0.00		n/a	10.00	0.016	0.58	991.47	5.01	n/a	n/a	0.14	0.50	7.99	18.00
E09	56+56.76	-42.00	Curb	On Grade	PROP	4.13	4.13	0.01	E08	0.76	10.00	0.016	0.58	991.69	10.31	n/a	n/a	0.26	0.50	12.95	29.00
E10	58+04.86	-42.00	Curb	On Grade	PROP	4.71	4.65	0.06	E08	0.71	10.00	0.016	0.58	991.44	10.98	n/a	n/a	0.28	0.50	13.77	29.00
E11	62+40.20	50.00	Curb	On Grade	PROP	3.06	3.06	0.00	E06	1.38	10.00	0.016	0.58	996.96	9.82	n/a	n/a	0.21	0.50	10.33	29.00
E12	64+55.25	42.00	Curb	On Grade	PROP	1.96	1.96	0.00	C08	1.27	10.00	0.016	0.58	1000.51	7.42	n/a	n/a	0.18	0.50	8.89	29.00
E13	56+77.83	49.50	Curb	Sag	PROP	6.59	10.33	0.00		n/a	10.00	0.015	0.33	991.34	13.60	n/a	n/a	0.37	0.50	18.53	0.00
E14	64+70.00	46.96	Grate	Sag	PROP	2.44	9.15	0.00		n/a	4.00	0.033	n/a	999.54	n/a	5.10	6.40	0.39	0.95	2.36	10.00
E20	57+66.01	47.98	Grate	Sag	PROP	2.18	14.81	0.00		n/a	4.00	0.033	n/a	991.97	n/a	5.10	6.40	0.37	1.31	2.29	15.00
E21	57+25.70	-57.00	Grate	Sag	PROP	2.00	19.19	0.00		n/a	4.00	0.033	n/a	989.50	n/a	5.10	6.40	0.35	1.96	2.79	32.00
E25	60+00.00	47.30	Junction	On Grade	PROP	1.56	1.42	0.00		1.33	n/a	0.015	n/a	992.38	13.60	n/a	n/a	0.13	1.00	6.30	0.00
F01	75+32.47	-54.01	Junction	On Grade	PROP	1.56	1.42	0.00		0.00	n/a	0.015	n/a	990.58	13.60	n/a	n/a	0.13	1.00	6.30	16.00
F02	74+96.84	-54.42	Curb	Sag	PROP	15.48	12.34	0.00		n/a	15.00	0.015	0.58	990.58	13.60	n/a	n/a	0.59	0.50	29.49	28.00
F03	74+96.39	50.93	Curb	Sag	PROP	12.86	12.34	0.00		n/a	15.00	0.015	0.58	990.58	13.60	n/a	n/a	0.41	0.50	20.37	36.00
F04	71+44.29	52.33	Curb	On Grade	EXIST	9.61	9.02	0.59	F03	1.30	15.00	0.016	0.58	996.38	19.06	n/a	n/a	0.32	0.50	16.06	37.00
G01	64+58.71	-50.00	Curb	On Grade	PROP	2.50	2.50	0.00	Zep	1.34	10.00	0.016	0.58	1000.31	8.66	n/a	n/a	0.19	0.50	9.64	31.00

NOTES:

1. INLET DATA WAS CALCULATED IN GEOPAK DRAINAGE.

NUMBER	DATE	REVISION	APPROVED

STATE OF TEXAS
ELEANOR R. RIVERA
87879
LICENSED
PROFESSIONAL ENGINEER

Eleanor R. Rivera 9-28-2020

Binkley & Barfield, Inc
consulting engineers
Texas Registration Number F-257

CEDAR PARK

ANDERSON MILL ROAD
HYDRAULIC CALCULATIONS
NODES

DESIGN BY:	GCC	SCALE:	
DRAWN BY:	DSH		
CHECKED BY:	BMB		
APPROVED BY:	BDR	SHEET:	3 OF 8
PROJECT NO:	156402		
DATE:	9/28/2020	PAGE:	125

9/28/2020
1:23:33 PM
I:\156402*Anderson*Mill*Road\CADD\SHEETS\DRCP1*Drainage*Calcs*03.dgn

25 YEAR - CONVEYANCE CONFIGURATION DATA

PIPE ID	US NODE	DS NODE	CUMUL AREA (acre)	CUMUL C	Tc USED (min)	CUMUL INTENSITY (in/hr)	TOTAL Q (cfs)	FULL VELOCITY (ft/s)	UNIFORM VELOCITY (ft/s)	ACTUAL VELOCITY US (ft/s)	ACTUAL VELOCITY DS (ft/s)	UNIFORM DEPTH (ft)	ACTUAL DEPTH US (ft)	ACTUAL DEPTH DS (ft)	CAPACITY (cfs)	ACTUAL PIPE LENGTH (ft)	HYD PIPE LENGTH (ft)	SLOPE (%)	PIPE SIZE	N VALUE	INVERT US	INVERT DS	FALL (ft)	FRICTION SLOPE	HGL US	HGL DS
A01	A01	A02	0.465	0.719	5	9.458	3.159	1.788	8.68	4.083	8.05	0.389	0.677	0.411	23.042	26.893	31.893	3.543	EX 18"	0.012	998.8	997.67	1.13	0.035	999.477	998.081
A02	A02	A03	0.465	0.719	5	9.458	3.159	1.788	8.767	4.083	8.275	0.386	0.677	0.403	23.404	36.659	36.659	3.655	EX 18"	0.012	997.67	996.33	1.34	0.036	998.347	996.733
A03	A03	A19	0.465	0.719	5	9.458	3.159	1.788	7.64	4.083	6.62	0.426	0.677	0.473	19.282	12.331	17.331	2.481	EX 18"	0.012	996.33	995.9	0.43	0.025	997.007	996.373
A05	A05	A08	4.449	0.682	12.61	7.27	22.053	7.02	11.555	7.841	10.618	1.17	1.677	1.256	36.698	56.831	58.831	1.938	EX 24"	0.012	976	974.86	1.14	0.019	977.677	976.116
A06	A06	A05	1.285	0.607	5	9.458	7.38	4.176	10.423	5.572	10.339	0.633	1.052	0.636	21.4	117.995	124.996	3.056	EX 18"	0.012	980.82	977	3.82	0.031	981.872	977.636
A07	A07	A08	1.525	0.554	16.76	6.485	5.479	3.1	4.865	4.315	3.453	0.913	1.013	1.262	8.631	65.137	66.387	0.497	EX 18"	0.012	975.69	975.36	0.33	0.005	976.703	976.622
A08	A08	A09	5.974	0.649	16.987	6.447	25.003	7.959	13.809	8.532	11.357	1.12	1.762	1.321	44.569	30.09	30.09	2.858	EX 24"	0.012	974.86	974	0.86	0.029	976.622	975.321
A09	A09	A24	5.974	0.649	16.987	6.447	25.003	7.959	15.57	8.532	15.056	1.018	1.762	1.045	52.263	140.999	142.999	3.93	24" RCP	0.012	974	968.38	5.62	0.039	975.762	969.425
A11	A11	A14	31.385	0.576	18.108	6.268	113.375	7.129	13.544	9.588	11.971	2.343	3.134	2.589	228.707	66.264	66.264	0.996	EX 54"	0.012	963.88	963.22	0.66	0.01	967.014	965.809
A12	A12	A27	19.73	0.559	15	6.794	74.929	7.788	11.965	9.374	10.53	2.169	2.71	2.426	114.662	19.502	23.002	0.956	EX 42"	0.012	965.07	964.85	0.22	0.009	967.78	967.276
A14	A14	A16	32.365	0.576	18.201	6.254	116.604	7.332	13.227	7.973	7.896	2.442	3.894	3.941	219.932	4.343	4.343	0.921	EX 54"	0.012	963.22	963.18	0.04	0.009	967.114	967.121
A15	A15	A14	0.98	0.569	5	9.458	5.277	1.68	14.093	4.423	12.606	0.353	0.81	0.382	83.437	29.446	31.946	10.017	EX 24"	0.012	968.92	965.72	3.2	0.1	969.73	966.102
A16	A16	A-OUT	32.365	0.576	18.201	6.254	116.604	7.332	13.687	7.896	7.332	2.376	3.941	4.5	229.133	58.011	58.016	1	54" RCP	0.012	963.18	962.6	0.58	0.01	967.121	967.1
A17	A17	A24	0.413	0.713	5	9.458	2.784	1.576	8.46	3.929	8.183	0.362	0.633	0.371	23.436	41.22	44.47	3.665	18" RCP	0.012	970.51	968.88	1.63	0.037	971.143	969.251
A18	A18	A33	0.585	0.602	5	9.458	3.332	1.886	9.133	4.155	9.133	0.39	0.696	0.39	24.25	170.922	180.922	3.924	18" RCP	0.012	996.27	989.17	7.1	0.039	996.966	989.56
A19	A19	A35	1.333	0.642	5	9.458	8.097	4.582	11.738	5.815	11.727	0.62	1.103	0.621	24.344	212.88	217.88	3.955	EX 18"	0.012	995.9	987.283	8.617	0.04	997.003	987.904
A20	A20	A05	3.164	0.712	12.58	7.277	16.394	9.277	14.532	9.433	12.108	0.914	1.431	1.074	25.639	18.965	26.216	4.387	18" RCP	0.012	977.65	976.5	1.15	0.044	979.081	977.574
A21	A21	A27	7.719	0.645	17.453	6.371	31.706	6.459	9.403	7.845	8.622	1.623	1.918	1.753	45.173	7.176	15.675	0.893	30" RCP	0.012	965.84	965.7	0.14	0.009	967.758	967.453
A22	A22	A21	6.931	0.663	17.353	6.388	29.337	5.977	9.655	7.546	9.177	1.485	1.847	1.55	47.706	48.227	58.227	0.996	30" RCP	0.012	966.42	965.84	0.58	0.01	968.267	967.39
A23	A23	A27	3.935	0.529	17.98	6.288	13.088	4.166	7.044	6.045	6.979	1.144	1.302	1.153	22.7	45.449	53.949	0.741	24" RCP	0.012	966.58	966.18	0.4	0.007	967.882	967.333
A24	A24	A22	6.387	0.653	17.177	6.416	26.772	5.454	10.502	7.23	10.151	1.288	1.764	1.323	54.865	103.815	110.815	1.318	30" RCP	0.012	967.88	966.42	1.46	0.013	969.644	967.743
A25	A25	A23	0.566	0.768	6.536	8.904	3.871	2.19	5.284	4.364	5.284	0.649	0.752	0.649	10.786	381.553	391.553	0.776	18" RCP	0.012	970.12	967.08	3.04	0.008	970.872	967.729
A26	A26	A25	0.321	0.734	5.41	9.303	2.191	1.24	4.778	3.653	4.778	0.459	0.559	0.459	11.544	312.714	322.714	0.889	18" RCP	0.012	972.99	970.12	2.87	0.009	973.549	970.579
A27	A27	A11	31.385	0.576	18.108	6.268	113.375	7.129	14.042	9.588	10.694	2.277	3.134	2.846	239.982	6.531	10.031	1.097	EX 54"	0.012	963.99	963.88	0.11	0.011	967.124	966.726
A30	A30	A20	2.434	0.689	12.048	7.393	12.402	7.018	12.878	7.486	10.434	0.803	1.33	0.956	23.82	16.67	21.92	3.786	18" RCP	0.012	979.13	978.3	0.83	0.038	980.46	979.256
A31	A31	A21	0.698	0.438	9.46	8.026	2.452	1.388	6.356	1.49	1.395	0.406	1.318	1.468	16.506	5.895	8.25	1.818	18" RCP	0.012	966.44	966.29	0.15	0.018	967.758	967.758
A32	A32	A23	2.921	0.437	17.96	6.291	8.031	4.544	6.886	5.793	6.381	0.941	1.098	1.005	12.054	5.896	8.251	0.97	18" RCP	0.012	967.16	967.08	0.08	0.01	968.258	968.085
A33	A33	A06	0.779	0.664	5	9.458	4.893	2.769	11.033	4.733	10.991	0.448	0.85	0.449	27.054	153.781	163.781	4.885	18" RCP	0.012	989.17	981.17	8	0.049	990.02	981.619
A34	A34	A35	1.101	0.746	12.04	7.395	6.074	3.437	7.61	3.802	3.667	0.693	1.272	1.33	14.992	2.362	3.467	1.5	18" RCP	0.012	987.335	987.283	0.052	0.015	988.607	988.613
A35	A35	A30	2.434	0.689	12.048	7.393	12.402	7.018	13.073	7.486	13.021	0.793	1.33	0.796	24.279	207.25	207.25	3.934	EX 18"	0.012	987.283	979.13	8.153	0.039	988.613	979.926
B01	B01	B-OUT	0.924	0.622	5.161	9.396	5.405	1.72	8.879	4.456	8.439	0.497	0.82	0.515	43.017	51.45	51.455	2.663	EX 24"	0.012	970.87	969.5	1.37	0.027	971.69	970.015
B02	B02	B01	0.924	0.622	5.161	9.396	5.405	3.059	7.504	4.906	6.5	0.641	0.896	0.715	15.294	14.734	14.734	1.561	EX 18"	0.012	971.1	970.87	0.23	0.016	971.996	971.585
B03	B03	B02	0.924	0.622	5.161	9.396	5.405	1.72	7.255	4.456	7.045	0.574	0.82	0.586	32.282	55.02	60.02	1.499	EX 24"	0.012	972	971.1	0.9	0.015	972.82	971.686
B04	B04	B03	0.25	0.523	5	9.458	1.236	0.699	4.444	3.09	4.417	0.322	0.416	0.323	13.192	40.551	43.051	1.161	18" RCP	0.012	972.6	972.1	0.5	0.012	973.016	972.423
C01	C01	C21	4.15	0.58	12	7.404	17.821	5.673	12.399	6.951	10.717	0.933	1.521	1.046	43.255	41.613	42.718	2.692	EX 24"	0.012	981.64	980.49	1.15	0.027	983.161	981.536
C05	C05	C11	19.039	0.529	15.099	6.776	68.277	7.097	11.136	8.944	10.698	2.13	2.59	2.204	106.843	93.54	97.541	0.83	EX 42"	0.012	974.08	973.27	0.81	0.008	976.67	975.474
C06	C06	C05	9.29	0.49	15	6.794	30.926	6.3	12.241	7.746	11.157	1.279	1.895	1.377	63.931	70.671	72.671	1.789	EX 30"	0.012	976.45	975.15	1.3	0.018	978.345	976.527
C07	C07	C05	6.588	0.591	13.221	7.141	27.806	3.934	8.045	6.702	7.682	1.474	1.706	1.529	61.334	29.936	36.937	0.623	36" RCP	0.012	975.12	974.89	0.23	0.006	976.826	976.419
C08	C08	C11	1.065	0.686	5.96	9.103	6.657	3.767	12.784	5.328	12.219	0.504	0.999	0.521	29.467	56.777	64.027	5.794	18" RCP	0.012	976.94	973.23	3.71	0.058	977.939	973.751
C09	C09	C07	6.046	0.581	12.071	7.388	25.943	3.67	8.296	6.539	8.276	1.364	1.645	1.367	65.617	562.485	572.485	0.713	36" RCP	0.012	979.3	975.22	4.08	0.007	980.945	976.587
C10	C10	C12	0.4	0.78	5	9.458	2.953	1.671	4.59	3.995	4.571	0.589	0.653	0.59	9.724	292.465	302.715	0.631	18" RCP	0.012	981.35	979.44	1.91	0.006	982.003	980.03
C11	C11	C-OUT	20.104	0.538	15.245	6.749	72.943	7.582	12.87	7.744	7.582	1.996	3.311	3.5	126.422	17.777	19.782	1.163	EX 42"	0.012	973.23	973	0.23	0.012	976.541	976.5
C12	C12	C08	0.756	0.713	5.289	9.348	5.038	2.851	6.247	4.783	6.224	0.699	0.864	0.701	12.207	240.919	251.419	0.994	18" RCP	0.012	979.44	976.94	2.5	0.01	980.304	977.641
C13	C13	C09	0.505	0.66	5	9.458	3.151	1.783	4.35	4.085	4.35	0.644	0.675	0.644	8.847	334.602	344.602	0.522	18" RCP	0.012	982.6	980.8	1.8	0.005	983.275	981.444
C20	C20	C05	3.161	0.516	7.03	8.741	14.258	4.538	5.343	5.943	6.265	1.584	1.427	1.36	15.955	2.355	5.46	0.366	24" RCP	0.012	976.1	976.08	0.02	0.004	977.527	977.44
C21	C21	C09	4.96	0.568	12.057	7.391	20.808	6.623	12.128	7.568	9.13	1.073	1.635	1.362	39.812	7.73	10.085	2.281	24" RCP	0.012	980.53	980.3	0.23	0.023	982.165	981.662
D01	D01	D-OUT	13.998	0.581	14.341	6.918	56.261	5.848	16.637	8.195	15.494	1.338	2.349	1.411	195.205	155.119	155.124	2.772	EX 42"	0.012	981	976.7	4.3	0.028	983.349	978.111
D02	D02	D20	13.323	0.578	14.189	6.948	53.522	5.563	10.76	8.027	10.224	1.797	2.289	1.871	109.71	93.719	98.219	0.876	EX 42"	0.012	982.16	981.3	0.86	0.009	984.449	983.171
D03	D03	D02	5.928	0.602	7.212	8.682	30.99	6.313	9.767	7.754	8.875	1.54	1.897	1.673	47.501	22.302	24.302	0.988	EX 30"	0.012	983.4	983.16	0.24	0.01	985.297	984.833
D04	D04	D03	5.928	0.602	7.212	8.682	30.99	9.864	14.088	10.122	12.33	1.32	1.877	1.492	43.1	40.033	40.033	2.673	EX 24"	0.012	984.97	983.9	1.07	0.027	986.847	985.392
D05	D05	D04	0.276	0.833	5	9.458	2.174	1.23	7.542	3.637	7.343	0.33	0.557	0.336	22.02	40.78	42.03	3.236	EX 18"	0.012	986.83	985.47	1.36	0.032	987.387	985.806
D06	D06	D04	5.652	0.591	7.202	8.685	29.005	9.232	14.086	9.57	10.718	1.247	1.846	1.607	43.899	8.656	8.656	2.773	EX 24"	0.012	985.21	984.97	0.24	0.028	987.056	986.577
D07	D07	D06	2.072	0.613	7.16	8.699	11.049	6.253	12.288	6.913	10.491	0.76	1.273	0.864	23.218	29.882	31.132	3.598	EX 18"	0.012	986.83	985.71	1.12	0.036	988.103	986.574
D08	D08	D06	3.58	0.578	7	8.751	18.107	5.764	12.502	7.008	10.027	0.939	1.533	1.118	43.447	25.036	25.036	2.716	EX 24"	0.012	985.89	985.21	0.68	0.027	987.423	986.328
D10	D10	D32	4.512	0.547	12.896	7.209	17.776	3.621	6.029	5.999	4.335	1.448	1.454	1.946	29.881	222.411	224.411	0.391	EX 30"	0.012	985.22	984.343	0.877	0.004	986.674	986.289
D11	D11	D10	2.672	0.508	12.774	7.235	9.812	3.123	8.581	5.417	7.66	0.785	1.121	0.855	32.402	28.451	30.451	1.511	24" RCP	0.012	986.7	986.24	0.46	0.015	987.821	987.095
D12	D12	D10	1.84	0.603	10	7.884	8.747	4.95	11.102	6.044	10.583	0.686	1.145	0.712	21.931	67.479	69.479	3.21	EX 18"	0.012	988.47	986.24	2.23	0.032	989.615	986.952
D14	D14	D20	0.674	0.636	5	9.458	4.055	2.295	5.862	4.43	5.804	0.622	0.771	0.626	12.131	50.293	58.043	0.982	18" RCP	0.012	983.57	983	0.57	0.01	984.341	983.626
D15	D15	D14	0.426	0.584	5	9.458	2.351	1.33	4.323	3.734	4.323	0.52	0.579	0.52	9.818	182.25	192.75	0.643	18" RCP	0.012	984.81	983.57	1.24	0.006	985.389	984.09
D16	D16	D19	0.398	0.648	6.34	8.971	2.314	1.31	4.963	3.714	4.949	0.465	0.575	0.466	11.986	52.777	55.277	0.959	18" RCP	0.012	987.78	987.25	0.53	0.01	988.355	987.716
D17	D17	D02	7.395	0.559	14.083	6.968	28.809	4.076	9.617	6.789	8.97	1.32	1.737	1.392	77.633	53.898	61.148	0.998	36" RCP	0.012	983.77	983.16	0.61	0.01	985.507	984.552
D18	D32	D17	5.944	0.551	13.516	7.081	23.191	4.724	5.888	5.923	6.369	1.87	1.859	1.737	27.452	194.85	200.1	0.33	30" RCP	0.012	984.43	983.77	0.66	0.003	986.289	985.507
D19	D19	D11	2.672	0.508	12.774	7.235	9.812	3.123	8.554	5.417	7.684	0.787	1.121	0.853	32.286	27.004	32.004	1.5	EX 24"	0.012	987.18	986.7	0.48	0.015	988.301	987.553
D20	D20	D01	13.998	0.581	14.341	6.918	56.261	5.848	12.251	8.195	9.901	1.688	2.349	2	128.692	19.08	21.58	1.205	EX 42"	0.012	981.26	981	0.26	0.012	983.609	983
D30	D30	D19	2.004	0.438	12.73	7.244	6.359	3.598	7.727	5.23	6.916	0.71	0.975	0.774	15.025	13.576	20.576	1.507	18" RCP	0.012	987.99	987.68	0.31	0.015	988.965	988.454
D31	D31	D17	0.151	0.567	5	9.458	0.812	0.46	3.504	2.728	3.313	0.283	0.338	0.295	11.274	2.873	5.895	0.848	EX 18"	0.012	985.32	985.27	0.05	0.008	985.658	985.565
D32	D18	D32	1.432	0.565	9.96	7.894	6.389	3.615	7.725	3.615	3.615	0.712	1.5	1.5	14.992	4.579	5.829	1.5	18" RCP	0.012	984.43	984.343	0.087	0.015	986.308	986.289

NOTES:

1. LINK DATA WAS CALCULATED IN GEOPAK DRAINAGE.

NUMBER	DATE	REVISION	APPROVED

STATE OF TEXAS
ELEANOR R. RIVERA
87879
LICENSED
PROFESSIONAL ENGINEER

Eleanor R. Rivera 9-28-2020

Binkley & Barfield, Inc
consulting engineers
Texas Registration Number F-257

CEDAR PARK

ANDERSON MILL ROAD
HYDRAULIC CALCULATIONS
LINKS

DESIGN BY: GCC
DRAWN BY: DSH
CHECKED BY: BMB
APPROVED BY: BDR
PROJECT NO: 156402
DATE: 9/28/2020

SCALE:

SHEET: 4 OF 8

PAGE: 126

9/28/2020
1:23:38 PM
T:\156402*Anderson*Mill*Road\CADD\SHEETS\DRCP1*Drainage*Calcs*04.dgn

25 YEAR - CONVEYANCE CONFIGURATION DATA

PIPE ID	US NODE	DS NODE	CUMUL AREA (acre)	CUMUL C	Tc USED (min)	CUMUL INTENSITY (in/hr)	TOTAL Q (cfs)	FULL VELOCITY (ft/s)	UNIFORM VELOCITY (ft/s)	ACTUAL VELOCITY US (ft/s)	ACTUAL VELOCITY DS (ft/s)	UNIFORM DEPTH (ft)	ACTUAL DEPTH US (ft)	ACTUAL DEPTH DS (ft)	CAPACITY (cfs)	ACTUAL PIPE LENGTH (ft)	HYD PIPE LENGTH (ft)	SLOPE (%)	PIPE SIZE	N VALUE	INVERT US	INVERT DS	FALL (ft)	FRICTION SLOPE	HGL US	HGL DS
E01	E01	E-OUT	7.914	0.566	13.528	7.079	31.682	6.454	17.431	7.842	12.606	0.993	1.918	1.274	102.445	24.99	26.995	4.594	EX 30"	0.012	985.24	984	1.24	0.046	987.158	985.274
E02	E02	E01	3.554	0.552	13.43	7.099	13.917	4.43	13.445	6.201	11.067	0.729	1.344	0.843	52.841	29.852	33.852	4.017	EX 24"	0.012	986.6	985.24	1.36	0.04	987.944	986.083
E03	E03	E01	1.381	0.565	13.188	7.148	5.581	1.776	12.19	4.498	10.41	0.407	0.834	0.454	66.29	24.464	26.464	6.323	EX 24"	0.012	986.697	985.024	1.673	0.063	987.531	985.478
E04	E04	E01	2.979	0.582	5.622	9.225	16	3.259	7.143	4.749	3.96	1.164	1.622	1.918	39.088	34.879	38.88	0.669	EX 30"	0.012	985.5	985.24	0.26	0.007	987.122	987.158
E06	E06	E04	1.507	0.511	5.548	9.252	7.123	2.267	10.636	4.86	9.433	0.532	0.947	0.579	49.498	26.556	36.31	3.525	EX 24"	0.012	986.78	985.5	1.28	0.035	987.727	986.079
E08	E08	E04	1.473	0.655	5.531	9.258	8.93	2.843	10.01	5.241	9.3	0.654	1.067	0.69	41.614	51.331	54.581	2.492	EX 24"	0.012	986.86	985.5	1.36	0.025	987.927	986.19
E09	E09	E08	0.435	0.705	5	9.458	2.899	1.641	3.829	3.829	3.97	0.666	0.666	0.648	7.684	55.989	65.989	0.394	18" RCP	0.012	987.62	987.36	0.26	0.004	988.286	988.008
E10	E10	E08	0.423	0.842	5.18	9.389	3.34	1.89	3.591	3.621	4.154	0.781	0.776	0.697	6.753	65.582	75.582	0.304	18" RCP	0.012	987.59	987.36	0.23	0.003	988.366	988.057
E11	E11	E25	0.976	0.605	11.751	7.46	4.408	2.495	6.448	4.561	6.448	0.616	0.805	0.616	13.428	242.316	249.316	1.203	18" RCP	0.012	992	989	3	0.012	992.805	989.616
E12	E12	E11	0.644	0.566	11.151	7.599	2.768	1.566	6.01	3.917	5.994	0.461	0.632	0.462	14.512	206.311	216.311	1.405	18" RCP	0.012	995.04	992	3.04	0.014	995.672	992.462
E13	E13	E02	3.554	0.552	13.43	7.099	13.917	4.43	5.215	5.673	6.201	1.584	1.458	1.344	15.459	10.198	17.449	0.344	24" RCP	0.012	986.68	986.62	0.06	0.003	988.138	987.964
E14	E14	E12	0.446	0.481	11.1	7.612	1.633	0.924	5.141	3.349	4.797	0.353	0.48	0.371	14.432	8.873	15.873	1.39	18" RCP	0.012	995.361	995.14	0.221	0.014	995.841	995.511
E20	E20	E03	1.381	0.565	13.188	7.148	5.581	1.776	8.022	4.498	6.71	0.546	0.834	0.621	36.783	14.598	16.598	1.947	24" RCP	0.012	986.9	986.577	0.323	0.019	987.734	987.198
E21	E21	E08	0.462	0.42	5	9.458	1.835	1.038	3.302	3.198	3.001	0.528	0.541	0.567	7.382	11.395	13.75	0.364	18" RCP	0.012	987.41	987.36	0.05	0.004	987.951	987.927
E22	E22	E13	2.2	0.57	10	7.884	9.886	3.147	5.321	4.383	4.06	1.144	1.35	1.448	17.044	25.005	30.255	0.418	24" RCP	0.012	986.816	986.69	0.126	0.004	988.166	988.138
E23	E23	E22	2.2	0.57	10	7.884	9.886	3.147	5.677	5.432	5.677	1.085	1.125	1.085	18.641	428.287	428.287	0.5	EX 24"	0.012	990.96	988.819	2.141	0.005	992.085	989.904
E24	E24	E23	2.2	0.57	10	7.884	9.886	3.147	5.774	5.432	5.753	1.071	1.125	1.074	18.983	27.002	27.002	0.518	EX 24"	0.012	991.1	990.96	0.14	0.005	992.225	992.034
E25	E25	E20	0.976	0.605	11.751	7.46	4.408	2.495	5.151	4.561	5.151	0.732	0.805	0.732	9.897	240.748	244.748	0.654	18" RCP	0.012	989	987.4	1.6	0.007	989.805	988.132
F01	F01	F-OUT	3.435	0.602	15.491	6.704	26.134	8.319	12.938	8.814	11.202	1.227	1.789	1.391	40.474	34.19	36.194	2.357	EX 24"	0.012	987.17	986.317	0.853	0.024	988.959	987.708
F02	F02	F01	1.59	0.724	5	9.458	10.886	3.465	10.358	5.626	9.034	0.737	1.183	0.816	40.473	25.886	35.64	2.357	EX 24"	0.012	988.01	987.17	0.84	0.024	989.193	987.986
F03	F03	F01	1.845	0.497	15.008	6.792	18.498	2.617	3.835	4.125	4.207	1.936	1.819	1.789	27.589	106.625	111.125	0.126	EX 36"	0.012	987.31	987.17	0.14	0.001	989.129	988.959
F04	F04	F03	1.845	0.497	14.15	6.955	6.377	2.03	7.053	4.689	7.053	0.66	0.894	0.66	29.158	347.459	362.967	1.223	EX 24"	0.012	991.75	987.31	4.44	0.012	992.644	987.97
G01	G01	G02	0.251	0.91	5	9.458	2.159	1.222	4.18	3.637	4.18	0.501	0.554	0.501	9.605	124.953	129.953	0.616	18" RCP	0.012	995	994.2	0.8	0.006	995.554	994.7
G02	G02	G-OUT	0.251	0.91	5	9.458	2.159	1.222	6.87	3.637	6.557	0.351	0.554	0.362	19.355	32.227	32.227	2.5	18" RCP	0.012	994.1	993.294	0.806	0.025	994.654	993.657

NOTES:

1. LINK DATA WAS CALCULATED IN GEOPAK DRAINAGE.

NUMBER	DATE	REVISION	APPROVED

STATE OF TEXAS
ELEANOR R. RIVERA
87879
LICENSED
PROFESSIONAL ENGINEER

Eleanor R. Rivera 9-28-2020

Binkley & Barfield, Inc
consulting engineers
Texas Registration Number F-257

CEDAR PARK

ANDERSON MILL ROAD
HYDRAULIC CALCULATIONS
LINKS

DESIGN BY: GCC
DRAWN BY: DSH
CHECKED BY: BMB
APPROVED BY: BDR
PROJECT NO: 156402
DATE: 9/28/2020

SCALE:

SHEET: 5 OF 8

PAGE: 127

9/28/2020
1:23:44 PM
I:\156402*Anderson*Mill*Road\CADD\SHEETS\DRCP1*Drainage*Calcs*05.dgn

100 YEAR - CONVEYANCE CONFIGURATION DATA

PIPE ID	US NODE	DS NODE	CUMUL AREA (acre)	CUMUL C	Tc USED (min)	CUMUL INTENSITY (in/hr)	TOTAL Q (cfs)	FULL VELOCITY (ft/s)	UNIFORM VELOCITY (ft/s)	ACTUAL VELOCITY US (ft/s)	ACTUAL VELOCITY DS (ft/s)	UNIFORM DEPTH (ft)	ACTUAL DEPTH US (ft)	ACTUAL DEPTH DS (ft)	CAPACITY (cfs)	ACTUAL PIPE LENGTH (ft)	HYD PIPE LENGTH (ft)	SLOPE (%)	PIPE SIZE	N VALUE	INVERT US	INVERT DS	FALL (ft)	FRICTION SLOPE	HGL US	HGL DS
A01	A01	A02	0.465	0.804	5	12.035	4.495	2.544	9.601	4.591	8.676	0.466	0.814	0.502	23.042	26.893	31.893	3.543	EX 18"	0.012	998.8	997.67	1.13	0.036	999.614	998.172
A02	A02	A03	0.465	0.804	5	12.035	4.495	2.544	9.7	4.591	8.919	0.463	0.814	0.492	23.404	36.659	36.659	3.655	EX 18"	0.012	997.67	996.33	1.34	0.037	998.484	996.822
A03	A03	A19	0.465	0.804	5	12.035	4.495	2.544	8.45	4.591	7.13	0.512	0.814	0.58	19.282	12.331	17.331	2.481	EX 18"	0.012	996.33	995.9	0.43	0.025	997.144	996.48
A05	A05	A08	4.449	0.771	12.608	9.461	32.433	10.324	12.377	10.536	11.764	1.555	1.895	1.64	36.698	56.831	58.831	1.938	EX 24"	0.012	976	974.86	1.14	0.019	977.895	976.5
A06	A06	A05	1.285	0.688	5	12.035	10.635	6.018	11.434	6.748	11.284	0.781	1.252	0.789	21.4	117.995	124.996	3.056	EX 18"	0.012	980.82	977	3.82	0.03	982.072	977.789
A07	A07	A08	1.525	0.629	16.76	8.503	8.157	4.616	5.169	4.777	4.685	1.254	1.388	1.436	8.631	65.137	66.387	0.497	EX 18"	0.012	975.69	975.36	0.33	0.005	977.078	976.796
A08	A08	A09	5.974	0.734	16.974	8.46	37.117	11.815	14.915	11.929	13.182	1.478	1.936	1.679	44.569	30.09	30.09	2.858	EX 24"	0.012	974.86	974	0.86	0.029	976.796	975.679
A09	A09	A24	5.974	0.734	16.974	8.46	37.117	11.815	17.035	11.929	16.368	1.309	1.936	1.356	52.263	140.999	142.999	3.93	24" RCP	0.012	974	968.38	5.62	0.039	975.936	969.736
A11	A11	A14	31.385	0.651	18.096	8.239	168.445	10.591	14.845	11.804	13.491	3.02	3.782	3.296	228.707	66.264	66.264	0.996	EX 54"	0.012	963.88	963.22	0.66	0.01	967.662	966.516
A12	A12	A27	19.73	0.63	15	8.882	110.4	11.475	12.657	12.04	12.316	2.977	3.174	3.079	114.662	19.502	23.002	0.956	EX 42"	0.012	965.07	964.85	0.22	0.01	968.244	967.929
A14	A14	A16	32.365	0.651	18.181	8.223	173.337	10.899	14.486	11.588	11.467	3.168	4.007	4.065	219.932	4.343	4.343	0.921	EX 54"	0.012	963.22	963.18	0.04	0.009	967.227	967.245
A15	A15	A14	0.98	0.648	5	12.035	7.647	2.434	15.72	4.974	13.493	0.424	0.983	0.472	83.437	29.446	31.946	10.017	EX 24"	0.012	968.92	965.72	3.2	0.1	969.903	966.192
A16	A16	A-OUT	32.365	0.651	18.181	8.223	173.337	10.899	14.912	11.467	10.899	3.086	4.065	4.5	229.133	58.011	58.016	1	54" RCP	0.012	963.18	962.6	0.58	0.01	967.245	967.1
A17	A17	A24	0.413	0.797	5	12.035	3.96	2.241	9.367	4.395	8.89	0.433	0.762	0.45	23.436	41.22	44.47	3.665	18" RCP	0.012	970.51	968.88	1.63	0.037	971.272	969.33
A18	A18	A33	0.585	0.683	5	12.035	4.811	2.722	10.151	4.703	10.123	0.47	0.843	0.471	24.25	170.922	180.922	3.924	18" RCP	0.012	996.27	989.17	7.1	0.039	997.113	989.641
A19	A19	A35	1.333	0.723	5	12.035	11.604	6.567	12.876	7.142	12.855	0.762	1.298	0.763	24.344	212.88	217.88	3.955	EX 18"	0.012	995.9	987.283	8.617	0.039	997.198	988.046
A20	A20	A05	3.164	0.804	12.58	9.468	24.092	13.633	15.387	13.658	14.203	1.243	1.484	1.374	25.639	18.965	26.216	4.387	18" RCP	0.012	977.65	976.5	1.15	0.044	979.134	977.874
A21	A21	A27	7.719	0.729	17.403	8.374	47.106	9.596	9.845	9.829	10.093	2.5	2.354	2.26	45.173	7.176	15.675	0.893	30" RCP	0.012	965.84	965.7	0.14	0.01	968.194	967.96
A22	A22	A21	6.931	0.748	17.308	8.393	43.504	8.863	10.253	9.512	10.148	2.017	2.199	2.039	47.706	48.227	58.227	0.996	30" RCP	0.012	966.42	965.84	0.58	0.01	968.619	967.879
A23	A23	A27	3.935	0.607	17.979	8.261	19.742	6.284	7.679	7.342	7.627	1.525	1.597	1.536	22.7	45.449	53.949	0.741	24" RCP	0.012	966.58	966.18	0.4	0.008	968.177	967.716
A24	A24	A22	6.387	0.738	17.148	8.425	39.736	8.095	11.488	8.941	11.118	1.659	2.123	1.708	54.865	103.815	110.815	1.318	30" RCP	0.012	967.88	966.42	1.46	0.013	970.003	968.128
A25	A25	A23	0.566	0.855	6.436	11.435	5.536	3.133	5.798	4.953	5.798	0.798	0.907	0.798	10.786	381.553	391.553	0.776	18" RCP	0.012	970.12	967.08	3.04	0.008	971.027	967.878
A26	A26	A25	0.321	0.82	5.41	11.857	3.12	1.766	5.243	4.068	5.243	0.556	0.672	0.556	11.544	312.714	322.714	0.889	18" RCP	0.012	972.99	970.12	2.87	0.009	973.662	970.676
A27	A27	A11	31.385	0.651	18.096	8.239	168.445	10.591	15.419	11.804	12.594	2.921	3.782	3.527	239.982	6.531	10.031	1.097	EX 54"	0.012	963.99	963.88	0.11	0.011	967.772	967.407
A30	A30	A20	2.434	0.783	12.047	9.609	18.31	10.362	14.011	10.455	11.994	1.04	1.454	1.209	23.82	16.67	21.92	3.786	18" RCP	0.012	979.13	978.3	0.83	0.038	980.584	979.509
A31	A31	A21	0.698	0.51	9.46	10.364	3.687	2.086	7.141	2.086	2.086	0.501	1.5	1.5	16.506	5.895	8.25	1.818	18" RCP	0.012	966.44	966.29	0.15	0.018	968.203	968.194
A32	A32	A23	2.921	0.512	17.96	8.265	12.361	6.995	7.176	7.276	7.468	1.5	1.377	1.328	12.054	5.896	8.251	0.97	18" RCP	0.012	967.16	967.08	0.08	0.01	968.537	968.408
A33	A33	A06	0.779	0.747	5	12.035	7.007	3.965	12.191	5.446	12.14	0.541	1.025	0.543	27.054	153.781	163.781	4.885	18" RCP	0.012	989.17	981.17	8	0.049	990.195	981.713
A34	A34	A35	1.101	0.855	12.04	9.611	9.047	5.12	8.396	5.254	5.166	0.88	1.407	1.454	14.992	2.362	3.467	1.5	18" RCP	0.012	987.335	987.283	0.052	0.015	988.742	988.737
A35	A35	A30	2.434	0.783	12.047	9.609	18.31	10.362	14.219	10.455	14.15	1.026	1.454	1.03	24.279	207.25	207.25	3.934	EX 18"	0.012	987.283	979.13	8.153	0.039	988.737	980.16
B01	B01	B-OUT	0.924	0.704	5.145	11.972	7.79	2.48	9.86	5.004	9.165	0.599	0.993	0.631	43.017	51.45	51.455	2.663	EX 24"	0.012	970.87	969.5	1.37	0.027	971.863	970.131
B02	B02	B01	0.924	0.704	5.145	11.972	7.79	4.408	8.23	5.711	7.146	0.792	1.081	0.888	15.294	14.734	14.734	1.561	EX 18"	0.012	971.1	970.87	0.23	0.016	972.181	971.758
B03	B03	B02	0.924	0.704	5.145	11.972	7.79	2.48	8.03	5.004	7.708	0.695	0.993	0.716	32.282	55.02	60.02	1.499	EX 24"	0.012	972	971.1	0.9	0.015	972.993	971.816
B04	B04	B03	0.25	0.601	5	12.035	1.807	1.022	4.965	3.444	4.907	0.389	0.506	0.392	13.192	40.551	43.051	1.161	18" RCP	0.012	972.6	972.1	0.5	0.012	973.106	972.492
C01	C01	C21	4.15	0.65	12	9.621	25.954	8.261	13.598	8.768	11.767	1.17	1.785	1.323	43.255	41.613	42.718	2.692	EX 24"	0.012	981.64	980.49	1.15	0.027	983.425	981.813
C05	C05	C11	19.039	0.589	15.091	8.861	99.412	10.333	11.756	11.137	11.688	2.875	3.062	2.893	106.843	93.54	97.541	0.83	EX 42"	0.012	974.08	973.27	0.81	0.008	977.142	976.163
C06	C06	C05	9.29	0.54	15	8.882	44.556	9.077	13.301	9.678	12.216	1.613	2.218	1.74	63.931	70.671	72.671	1.789	EX 30"	0.012	976.45	975.15	1.3	0.018	978.668	976.89
C07	C07	C05	6.588	0.658	13.112	9.332	40.442	5.721	8.729	7.77	8.511	1.87	2.071	1.911	61.334	29.936	36.937	0.623	36" RCP	0.012	975.12	974.89	0.23	0.006	977.191	976.801
C08	C08	C11	1.065	0.766	5.81	11.689	9.539	5.398	14.11	6.33	13.211	0.611	1.193	0.642	29.467	56.777	64.027	5.794	18" RCP	0.012	976.94	973.23	3.71	0.058	978.133	973.872
C09	C09	C07	6.046	0.646	12.065	9.604	37.509	5.306	9.115	7.524	9.079	1.694	1.993	1.7	65.617	562.485	572.485	0.713	36" RCP	0.012	979.3	975.22	4.08	0.007	981.293	976.92
C10	C10	C12	0.4	0.868	5	12.035	4.181	2.366	5.031	4.477	5.031	0.715	0.784	0.715	9.724	292.465	302.715	0.631	18" RCP	0.012	981.35	979.44	1.91	0.006	982.134	980.155
C11	C11	C-OUT	20.104	0.599	15.229	8.83	106.272	11.046	13.837	11.104	11.046	2.605	3.425	3.5	126.422	17.777	19.782	1.163	EX 42"	0.012	973.23	973	0.23	0.012	976.655	976.5
C12	C12	C08	0.756	0.798	5.193	11.951	7.211	4.08	6.794	5.515	6.794	0.869	1.04	0.869	12.207	240.919	251.419	0.994	18" RCP	0.012	979.44	976.94	2.5	0.01	980.48	977.809
C13	C13	C09	0.505	0.705	5	12.035	4.283	2.424	4.688	4.513	4.688	0.77	0.794	0.77	8.847	334.602	344.602	0.522	18" RCP	0.012	982.6	980.8	1.8	0.005	983.394	981.57
C20	C20	C05	3.161	0.591	7.03	11.206	20.935	6.664	6.837	7.167	7.595	2	1.755	1.64	15.955	2.355	5.46	0.366	24" RCP	0.012	976.1	976.08	0.02	0.006	977.855	977.72
C21	C21	C09	4.96	0.638	12.052	9.607	30.414	9.681	13.168	9.96	10.831	1.379	1.869	1.674	39.812	7.73	10.085	2.281	24" RCP	0.012	980.53	980.3	0.23	0.023	982.399	981.974
D01	D01	D-OUT	13.998	0.656	14.163	9.075	83.394	8.668	18.475	9.948	16.848	1.665	2.848	1.79	195.205	155.119	155.124	2.772	EX 42"	0.012	981	976.7	4.3	0.028	983.848	978.49
D02	D02	D20	13.323	0.653	14.023	9.109	79.288	8.241	11.696	9.665	11.286	2.323	2.783	2.398	109.71	93.719	98.219	0.876	EX 42"	0.012	982.16	981.3	0.86	0.009	984.943	983.698
D03	D03	D02	5.928	0.677	7.209	11.139	44.726	9.112	10.203	9.705	10.053	2.09	2.221	2.126	47.501	22.302	24.302	0.988	EX 30"	0.012	983.4	983.16	0.24	0.01	985.621	985.286
D04	D04	D03	5.928	0.677	7.209	11.139	44.726	14.237	14.606	14.237	14.283	2	2	1.969	43.1	40.033	40.033	2.673	EX 24"	0.012	984.97	983.9	1.07	0.029	987.22	985.869
D05	D05	D04	0.276	0.922	5	12.035	3.062	1.733	8.331	4.043	7.963	0.392	0.666	0.405	22.02	40.78	42.03	3.236	EX 18"	0.012	986.83	985.47	1.36	0.032	987.496	985.875
D06	D06	D04	5.652	0.665	7.199	11.142	41.906	13.339	14.768	13.339	13.339	1.694	2	2	43.899	8.656	8.656	2.773	EX 24"	0.012	985.21	984.97	0.24	0.028	987.473	987.22
D07	D07	D06	2.072	0.692	7.16	11.157	15.998	9.053	13.375	9.227	11.612	0.961	1.425	1.092	23.218	29.882	31.132	3.598	EX 18"	0.012	986.83	985.71	1.12	0.036	988.255	986.802
D08	D08	D06	3.58	0.65	7	11.217	26.102	8.309	13.676	8.806	11.151	1.17	1.789	1.396	43.447	25.036	25.036	2.716	EX 24"	0.012	985.89	985.21	0.68	0.027	987.679	986.606
D10	D10	D32	4.512	0.62	12.88	9.391	26.257	5.349	6.413	5.349	5.349	1.943	2.5	2.5	29.881	222.411	224.411	0.391	EX 30"	0.012	985.22	984.343	0.877	0.004	987.975	987.191
D11	D11	D10	2.672	0.585	12.77	9.419	14.724	4.687	9.539	6.353	8.439	0.986	1.383	1.087	32.402	28.451	30.451	1.511	24" RCP	0.012	986.7	986.24	0.46	0.015	988.083	987.327
D12	D12	D10	1.84	0.67	10	10.196	12.57	7.113	12.122	7.56	11.457	0.853	1.336	0.893	21.931	67.479	69.479	3.21	EX 18"	0.012	988.47	986.24	2.23	0.032	989.806	987.133
D14	D14	D20	0.674	0.718	5	12.035	5.829	3.299	6.439	5.052	6.36	0.765	0.932	0.772	12.131	50.293	58.043	0.982	18" RCP	0.012	983.57	983	0.57	0.01	984.502	983.772
D15	D15	D14	0.426	0.665	5	12.035	3.406	1.928	4.81	4.179	4.783	0.633	0.704	0.635	9.818	182.25	192.75	0.643	18" RCP	0.012	984.81	983.57	1.24	0.007	985.514	984.205
D16	D16	D19	0.398	0.731	6.34	11.473	3.339	1.889	5.499	4.152	5.458	0.564	0.697	0.567	11.986	52.777	55.277	0.959	18" RCP	0.012	987.78	987.25	0.53	0.01	988.477	987.817
D17	D17	D02	7.395	0.634	13.927	9.131	42.821	6.058	10.661	7.971	9.901	1.661	2.132	1.765	77.633	53.898	61.148	0.998	36" RCP	0.012	983.77	983.16	0.61	0.01	985.902	984.925
D18	D32	D17	5.944	0.625	13.463	9.244	34.349	6.998	7.179	6.998	7.703	2.5	2.5	2.132	27.452	194.85	200.1	0.33	30" RCP	0.012	984.43	983.77	0.66	0.005	987.191	985.902
D19	D19	D11	2.672	0.585	12.77	9.419	14.724	4.687	9.494	6.353	8.468	0.99	1.383	1.084	32.286	27.004	32.004	1.5	EX 24"	0.012	987.18	986.7	0.48	0.015	988.563	987.784
D20	D20	D01	13.998	0.656	14.163	9.075	83.394	8.668	13.41	9.948	11.285	2.156	2.848	2.512	128.692	19.08	21.58	1.205	EX 42"	0.012	981.26	981	0.26	0.012	984.108	983.512
D30	D30	D19	2.004	0.513	12.73	9.429	9.694	5.485	8.546	6.387	7.738	0.919	1.202	1.001	15.025	13.576	20.576	1.507	18" RCP	0.012	987.99	987.68	0.31	0.015	989.192	988.681
D31	D31	D17	0.151	0.645	5	12.035	1.176	0.665	3.937	1.881	1.662	0.338	0.576	0.632	11.274	2.873	5.895	0.848	EX 18"	0.012	985.32	985.27	0.05	0.009	985.896	985.902
D32	D18	D32	1.432	0.642	9.96	10.208	9.387	5.312	8.457	5.312	5.312	0.902	1.5	1.5	14.992	4.579	5.829	1.5	18" RCP	0.012	984.43	984.343	0.087	0.015	987.231	987.191

NOTES:

1. LINK DATA WAS CALCULATED IN GEOPAK DRAINAGE.

NUMBER	DATE	REVISION	APPROVED

STATE OF TEXAS
ELEANOR R. RIVERA
87879
LICENSED
PROFESSIONAL ENGINEER

Eleanor R. Rivera 9-28-2020

Binkley & Barfield, Inc
consulting engineers
Texas Registration Number F-257

CEDAR PARK

ANDERSON MILL ROAD
HYDRAULIC CALCULATIONS
LINKS

DESIGN BY: GCC
DRAWN BY: DSH
CHECKED BY: BMB
APPROVED BY: BDR
PROJECT NO: 156402
DATE: 9/28/2020

SCALE:

SHEET: 6 OF 8

PAGE: 128

9/28/2020
1:23:48 PM
T:\156402*AndersonMill*Road\CADD\SHEETS\DRCP1*Drainage*Calcs*06.dgn

100 YEAR - CONVEYANCE CONFIGURATION DATA

PIPE ID	US NODE	DS NODE	CUMUL AREA (acre)	CUMUL C	Tc USED (min)	CUMUL INTENSITY (in/hr)	TOTAL Q (cfs)	FULL VELOCITY (ft/s)	UNIFORM VELOCITY (ft/s)	ACTUAL VELOCITY US (ft/s)	ACTUAL VELOCITY DS (ft/s)	UNIFORM DEPTH (ft)	ACTUAL DEPTH US (ft)	ACTUAL DEPTH DS (ft)	CAPACITY (cfs)	ACTUAL PIPE LENGTH (ft)	HYD PIPE LENGTH (ft)	SLOPE (%)	PIPE SIZE	N VALUE	INVERT US	INVERT DS	FALL (ft)	FRICTION SLOPE	HGL US	HGL DS
E01	E01	E-OUT	7.914	0.614	13.514	9.232	44.874	9.142	19.105	9.728	13.78	1.208	2.224	1.575	102.445	24.99	26.995	4.594	EX 30"	0.012	985.24	984	1.24	0.046	987.464	985.575
E02	E02	E01	3.554	0.597	13.43	9.252	19.615	6.244	14.752	7.315	11.884	0.879	1.592	1.04	52.841	29.852	33.852	4.017	EX 24"	0.012	986.6	985.24	1.36	0.04	988.192	986.28
E03	E03	E01	1.381	0.645	12.993	9.362	8.337	2.654	13.695	5.12	11.165	0.497	1.029	0.575	66.29	24.464	26.464	6.323	EX 24"	0.012	986.697	985.024	1.673	0.063	987.726	985.599
E04	E04	E01	2.979	0.621	5.6	11.776	21.79	4.439	7.749	5.243	4.724	1.393	1.974	2.224	39.088	34.879	38.88	0.669	EX 30"	0.012	985.5	985.24	0.26	0.007	987.474	987.464
E06	E06	E04	1.507	0.548	5.548	11.798	9.741	3.101	11.632	5.403	10.034	0.624	1.116	0.695	49.498	26.556	36.31	3.525	EX 24"	0.012	986.78	985.5	1.28	0.035	987.896	986.195
E08	E08	E04	1.473	0.696	5.503	11.817	12.11	3.855	10.896	5.86	9.944	0.768	1.251	0.823	41.614	51.331	54.581	2.492	EX 24"	0.012	986.86	985.5	1.36	0.025	988.111	986.323
E09	E09	E08	0.435	0.79	5	12.035	4.134	2.339	4.22	4.22	4.463	0.814	0.814	0.778	7.684	55.989	65.989	0.394	18" RCP	0.012	987.62	987.36	0.26	0.004	988.434	988.138
E10	E10	E08	0.423	0.932	5.18	11.956	4.708	2.664	3.904	3.953	4.666	0.968	0.958	0.834	6.753	65.582	75.582	0.304	18" RCP	0.012	987.59	987.36	0.23	0.003	988.548	988.194
E11	E11	E25	0.976	0.687	11.685	9.707	6.515	3.687	7.131	5.282	7.131	0.77	0.987	0.77	13.428	242.316	249.316	1.203	18" RCP	0.012	992	989	3	0.012	992.987	989.77
E12	E12	E11	0.644	0.648	11.146	9.858	4.112	2.327	6.686	4.45	6.686	0.569	0.777	0.569	14.512	206.311	216.311	1.405	18" RCP	0.012	995.04	992	3.04	0.014	995.817	992.569
E13	E13	E02	3.554	0.597	13.43	9.252	19.615	6.244	6.406	6.573	7.315	2	1.805	1.592	14.112	10.198	17.449	0.287	24" RCP	0.012	986.65	986.6	0.05	0.006	988.455	988.192
E14	E14	E12	0.446	0.555	11.1	9.871	2.444	1.383	5.78	3.768	5.266	0.433	0.592	0.463	14.432	8.873	15.873	1.39	18" RCP	0.012	995.361	995.14	0.221	0.014	995.953	995.603
E20	E20	E03	1.381	0.645	12.993	9.362	8.337	2.654	8.98	5.12	7.327	0.673	1.029	0.782	36.783	14.598	16.598	1.947	24" RCP	0.012	986.9	986.577	0.323	0.019	987.929	987.359
E21	E21	E08	0.462	0.36	5	12.035	2.001	1.132	3.362	2.445	2.263	0.556	0.707	0.751	7.382	11.395	13.75	0.364	18" RCP	0.012	987.41	987.36	0.05	0.004	988.117	988.111
E22	E22	E13	2.2	0.64	10	10.196	14.356	4.57	5.695	5.005	4.892	1.496	1.716	1.765	17.044	25.005	30.255	0.418	24" RCP	0.012	986.816	986.69	0.126	0.004	988.532	988.455
E23	E23	E22	2.2	0.64	10	10.196	14.356	4.57	6.215	6.215	6.284	1.379	1.379	1.365	18.641	428.287	428.287	0.5	EX 24"	0.012	990.96	988.819	2.141	0.005	992.339	990.184
E24	E24	E23	2.2	0.64	10	10.196	14.356	4.57	6.215	6.215	6.215	1.379	1.379	1.379	18.983	27.002	27.002	0.518	EX 24"	0.012	991.1	990.96	0.14	0.005	992.479	992.339
E25	E25	E20	0.976	0.687	11.685	9.707	6.515	3.687	5.625	5.282	5.625	0.935	0.987	0.935	9.897	240.748	244.748	0.654	18" RCP	0.012	989	987.4	1.6	0.006	989.987	988.335
F01	F01	F-OUT	3.435	0.683	15.369	8.799	32.905	10.474	13.505	10.673	12.139	1.448	1.9	1.61	40.474	34.19	36.194	2.357	EX 24"	0.012	987.17	986.317	0.853	0.024	989.07	987.927
F02	F02	F01	1.59	0.809	5	12.035	15.478	4.927	11.376	6.496	9.761	0.895	1.418	1.007	40.473	25.886	35.64	2.357	EX 24"	0.012	988.01	987.17	0.84	0.023	989.428	988.177
F03	F03	F01	1.845	0.574	14.915	8.901	21.696	3.069	4.08	4.426	4.596	2.112	1.963	1.9	27.589	106.625	111.125	0.126	EX 36"	0.012	987.31	987.17	0.14	0.001	989.273	989.07
F04	F04	F03	1.845	0.574	14.15	9.078	9.614	3.06	7.91	5.378	7.894	0.821	1.109	0.823	29.158	347.459	362.967	1.223	EX 24"	0.012	991.75	987.31	4.44	0.012	992.859	988.133
G01	G01	G02	0.251	0.827	5	12.035	2.496	1.413	4.309	3.798	4.309	0.545	0.598	0.545	9.605	124.953	129.953	0.616	18" RCP	0.012	995	994.2	0.8	0.006	995.598	994.744
G02	G02	G-OUT	0.251	0.827	5	12.035	2.496	1.413	7.16	3.798	6.788	0.377	0.598	0.392	19.355	32.227	32.227	2.5	18" RCP	0.012	994.1	993.294	0.806	0.025	994.698	993.686

NOTES:

1. LINK DATA WAS CALCULATED IN GEOPAK DRAINAGE.

NUMBER	DATE	REVISION	APPROVED

STATE OF TEXAS
ELEANOR R. RIVERA
87879
LICENSED
PROFESSIONAL ENGINEER

Eleanor R. Rivera 9-28-2020

Binkley & Barfield, Inc
consulting engineers
Texas Registration Number F-257

CEDAR PARK

ANDERSON MILL ROAD
HYDRAULIC CALCULATIONS
LINKS

DESIGN BY: GCC
DRAWN BY: DSH
CHECKED BY: BMB
APPROVED BY: BDR
PROJECT NO: 156402
DATE: 9/28/2020

SCALE:

SHEET: 7 OF 8

PAGE: 129

9/28/2020
1:23:55 PM
I:\156402*Anderson*Mill*Road\CADD\SHEETS\DRCP1*Drainage*Calcs*07.dgn

DITCH DATA							
DITCH NAME	STA	OFF	LT/RT	FLOW LINE	BOTTOM WIDTH	LONGITUDINAL SLOPE	CHANNEL DEPTH
	(ft)	(ft)		(ft)	(ft)	(ft/ft)	(ft)
A31	17+75	48.36	RT	976.30	0	0.036	0.21
A31	18+00	50.96	RT	975.39	0	0.036	1.25
A31	18+50	51.05	RT	974.04	0	0.027	1.28
A31	19+00	50.89	RT	973.19	0	0.017	1.17
A31	19+50	50.68	RT	972.39	0	0.016	1.19
A31	20+00	51.37	RT	971.74	0	0.013	1.22
A31	20+50	51.27	RT	971.42	0	0.006	1.11
A31	20+79	51.50	RT	971.23	2	0.006	1.08
A32	21+51	51.50	RT	971.56	2	0.004	0.52
A32	22+00	50.92	RT	971.79	0	0.005	0.77
A32	22+50	49.53	RT	972.03	0	0.005	0.76
A32	23+00	49.81	RT	972.28	0	0.005	0.95
A32	23+50	50.07	RT	972.63	0	0.007	1.07
A32	24+00	49.44	RT	973.03	0	0.008	0.88
A32	24+50	50.16	RT	973.50	0	0.009	0.96
A32	25+00	49.32	RT	974.00	0	0.010	0.84
A32	25+26	45.84	RT	974.26	0	0.010	1.03
A32	25+50	49.34	RT	974.49	0	0.010	0.91
A32	26+00	50.76	RT	974.74	0	0.005	0.80
A32	26+50	51.06	RT	974.99	0	0.005	0.89
A32	27+00	51.04	RT	975.49	0	0.010	0.80
A32	27+50	51.08	RT	975.86	0	0.007	0.86
A32	28+00	51.19	RT	976.33	0	0.009	0.82
A32	28+50	51.17	RT	977.02	0	0.014	0.98
A32	29+00	53.05	RT	977.49	0	0.009	0.77
A32	29+50	50.07	RT	978.10	0	0.012	0.90
A32	30+00	49.54	RT	978.81	0	0.014	0.77
A32	30+50	49.40	RT	979.34	0	0.011	0.75
A32	31+00	49.59	RT	979.93	0	0.012	0.68
A32	31+50	48.00	RT	980.46	0	0.011	0.57
A32	32+00	49.82	RT	980.82	0	0.007	0.53
A34	14+15	48.29	RT	992.32	2	0.010	0.65
A34	14+00	48.83	RT	992.47	0	0.010	1.13
A34	13+65	50.04	RT	993.87	0	0.040	0.78
C20	32+30	51.00	RT	980.35	2	0.008	1.25
C20	32+50	50.09	RT	980.51	0	0.008	1.26
C20	33+00	50.39	RT	980.91	0	0.008	1.29
C20	33+50	50.84	RT	981.31	0	0.008	1.39
C20	34+00	50.96	RT	981.71	0	0.008	1.46
C20	34+50	50.98	RT	982.11	0	0.008	1.63
C20	35+00	51.15	RT	982.51	0	0.008	1.63
C20	35+50	51.21	RT	982.91	0	0.008	1.69
C20	36+00	51.03	RT	983.31	0	0.008	1.74
C20	36+50	51.16	RT	983.71	0	0.008	1.82
C20	37+00	51.01	RT	984.11	0	0.008	1.78
C20	37+50	51.19	RT	984.51	0	0.008	1.71
C20	38+00	51.05	RT	984.91	0	0.008	1.55

DITCH DATA							
DITCH NAME	STA	OFF	LT/RT	FLOW LINE	BOTTOM WIDTH	LONGITUDINAL SLOPE	CHANNEL DEPTH
	(ft)	(ft)		(ft)	(ft)	(ft/ft)	(ft)
C21	38+50	54.49	RT	985.21	2	0.005	1.37
C21	39+00	51.00	RT	985.43	0	0.005	1.23
C21	39+50	51.00	RT	985.66	0	0.005	1.35
C21	40+00	51.55	RT	985.88	0	0.005	1.38
C21	40+50	51.41	RT	986.11	0	0.005	1.50
C21	41+00	54.26	RT	986.33	0	0.005	1.55
D30	48+60	46.87	RT	990.46	2	0.005	1.43
D30	49+00	46.93	RT	990.67	0	0.005	1.28
D30	49+50	47.13	RT	990.93	0	0.005	1.22
D30	50+00	47.04	RT	991.19	0	0.005	1.19
D30	50+50	46.68	RT	991.45	0	0.005	1.16
D30	51+00	47.04	RT	991.71	0	0.005	1.09
D30	51+50	47.02	RT	991.97	0	0.005	1.00
D30	52+00	47.06	RT	992.23	0	0.005	0.92
D31	43+50	47.92	RT	988.66	2	0.010	1.02
D31	43+96	49.08	RT	989.13	0	0.010	0.46
E14	66+50	46.79	RT	1000.98	0	0.008	0.95
E14	66+00	46.83	RT	1000.58	0	0.008	1.23
E14	65+50	46.76	RT	1000.18	0	0.008	1.21
E14	65+00	46.81	RT	999.78	0	0.008	1.04
E14	64+70	46.96	RT	999.54	2	0.008	0.95
E20	60+00	47.30	RT	991.97	4	0.014	1.53
E20	59+50	47.03	RT	991.26	0	0.014	1.58
E20	59+00	47.06	RT	990.99	0	0.005	1.18
E20	58+50	46.95	RT	990.62	0	0.007	1.13
E20	58+00	46.55	RT	990.25	0	0.007	1.11
E20	57+66	47.98	RT	990.00	2	0.007	1.31
E21	57+26	57.00	LT	989.50	2	0.008	1.96
E21	57+50	56.73	LT	989.70	0	0.008	1.23
E21	58+00	54.40	LT	990.10	0	0.008	0.78
E21	58+50	50.26	LT	990.50	0	0.008	0.77
E21	59+00	49.36	LT	990.90	0	0.008	1.22
E21	59+50	51.12	LT	991.30	0	0.008	1.46
E21	60+00	51.30	LT	991.70	0	0.008	1.89
E21	60+50	51.51	LT	992.10	0	0.008	2.20
E21	61+00	52.53	LT	992.50	0	0.008	2.56
E21	61+50	54.48	LT	992.90	0	0.008	2.89
E21	62+00	54.04	LT	993.30	0	0.008	3.21
E21	62+50	52.66	LT	993.70	0	0.008	3.42
E21	62+88	51.60	LT	994.00	1.5	0.008	2.13

NOTES:

1. LINK DATA WAS CALCULATED IN GEOPAK DRAINAGE.

NUMBER	DATE	REVISION	APPROVED

STATE OF TEXAS
ELEANOR R. RIVERA
87879
LICENSED
PROFESSIONAL ENGINEER

Eleanor R. Rivera 9-28-2020

Binkley & Barfield, Inc
consulting engineers
Texas Registration Number F-257

CEDAR PARK

ANDERSON MILL ROAD
HYDRAULIC CALCULATIONS
DITCHES

DESIGN BY: GCC
DRAWN BY: DSH
CHECKED BY: BMB
APPROVED BY: BDR
PROJECT NO: 156402
DATE: 9/28/2020

SCALE:

SHEET: 8 OF 8

PAGE: 130

9/28/2020
1:23:59 PM
T:\156402*AndersonMill*Road\CADD\SHEETS\DRCP1*Drainage*Calcs*08.dgn

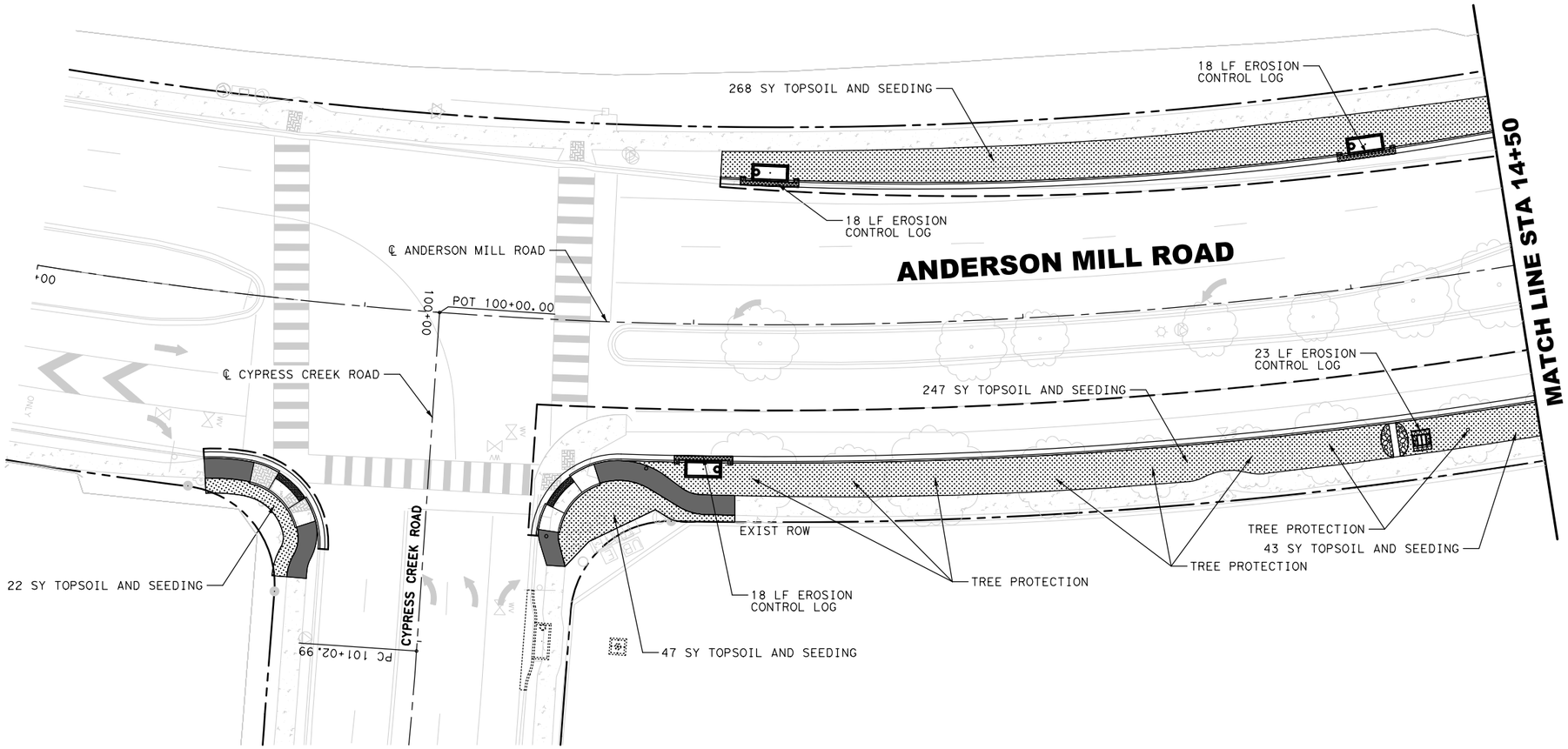

0′ 10′ 20′ 40′
SCALE: 1"=40′

LEGEND

- ROCK BERM
- SEDIMENT CONTROL FENCE
- EROSION CONTROL LOG
- TOPSOIL AND SEEDING

NUMBER	DATE	REVISION	APPROVED

EROSION AND SEDIMENTATION CONTROL NOTES:

1. EROSION CONTROL MEASURES, SITE WORK, AND RESTORATION WORK SHALL BE IN ACCORDANCE WITH THE CITY OF CEDAR PARK'S SUBDIVISION CODE AND CONSTRUCTION STANDARDS MANUAL, EXCEPT AS NOTED BELOW AND APPROVED BY CITY COUNCIL.

2. SLOPES SHALL BE SODDED OR SEEDED WITH THE APPROPRIATE GRASS, GRASS MIXTURES, OR GROUND COVER SUITABLE TO THE AREA AND SEASON TO WHICH THEY ARE APPLIED.

3. SILT FENCES, ROCK BERMS, AND SIMILARLY RECOGNIZED TECHNIQUES AND MATERIALS SHALL BE EMPLOYED DURING CONSTRUCTION TO PREVENT POINT SOURCE SEDIMENTATION LOADING OF DOWNSTREAM FACILITIES. SUCH INSTALLATION SHALL BE REGULARLY INSPECTED BY THE CITY OF CEDAR PARK FOR EFFECTIVENESS. ADDITIONAL MEASURES MAY BE REQUIRED IF, IN THE OPINION OF THE CITY ENGINEER, THEY ARE WARRANTED.

4. ALL TEMPORARY EROSION CONTROL MEASURES SHALL NOT BE REMOVED UNTIL FINAL INSPECTION AND APPROVAL OF THE PROJECT BY THE ENGINEER.

5. IT SHALL BE THE RESPONSIBILITY OF THE CONTRACTOR TO MAINTAIN ALL TEMPORARY EROSION CONTROL STRUCTURES AND TO REMOVE EACH STRUCTURE AS APPROVED BY THE ENGINEER.

Binkley & Barfield, Inc
consulting engineers
Texas Registration Number F-257

CEDAR PARK

ANDERSON MILL ROAD
EROSION CONTROL PLANS
STA 10+00 - STA 14+50

DESIGN BY:	GCC	SCALE:	1"=40′
DRAWN BY:	DSH		
CHECKED BY:	BMB		
APPROVED BY:	BDR	SHEET:	1 OF 14
PROJECT NO:	156402		
DATE:	9/28/2020	PAGE:	131

9/28/2020
1:24:04 PM
T:\156402*Anderson*Mill*Road\CADD\SHEETS\EVEC01*AM*01.dgn

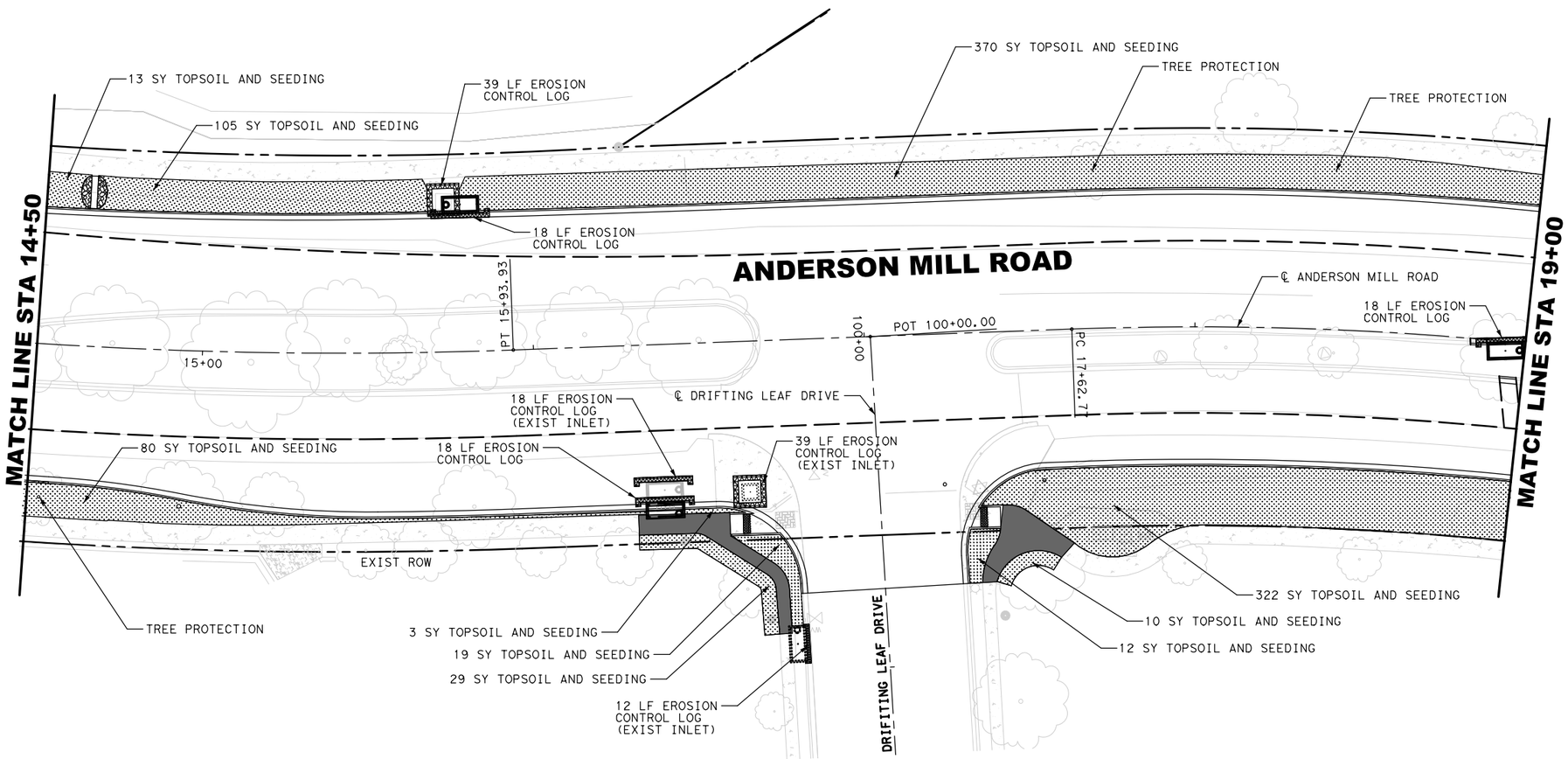

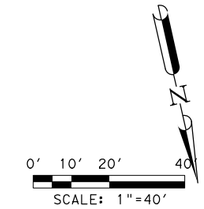

LEGEND

- ROCK BERM
- SCF — SEDIMENT CONTROL FENCE
- EROSION CONTROL LOG
- TOPSOIL AND SEEDING

EROSION AND SEDIMENTATION CONTROL NOTES:

1. EROSION CONTROL MEASURES, SITE WORK, AND RESTORATION WORK SHALL BE IN ACCORDANCE WITH THE CITY OF CEDAR PARK'S SUBDIVISION CODE AND CONSTRUCTION STANDARDS MANUAL, EXCEPT AS NOTED BELOW AND APPROVED BY CITY COUNCIL.

2. SLOPES SHALL BE SODDED OR SEEDED WITH THE APPROPRIATE GRASS, GRASS MIXTURES, OR GROUND COVER SUITABLE TO THE AREA AND SEASON TO WHICH THEY ARE APPLIED.

3. SILT FENCES, ROCK BERMS, AND SIMILARLY RECOGNIZED TECHNIQUES AND MATERIALS SHALL BE EMPLOYED DURING CONSTRUCTION TO PREVENT POINT SOURCE SEDIMENTATION LOADING OF DOWNSTREAM FACILITIES. SUCH INSTALLATION SHALL BE REGULARLY INSPECTED BY THE CITY OF CEDAR PARK FOR EFFECTIVENESS. ADDITIONAL MEASURES MAY BE REQUIRED IF, IN THE OPINION OF THE CITY ENGINEER, THEY ARE WARRANTED.

4. ALL TEMPORARY EROSION CONTROL MEASURES SHALL NOT BE REMOVED UNTIL FINAL INSPECTION AND APPROVAL OF THE PROJECT BY THE ENGINEER.

5. IT SHALL BE THE RESPONSIBILITY OF THE CONTRACTOR TO MAINTAIN ALL TEMPORARY EROSION CONTROL STRUCTURES AND TO REMOVE EACH STRUCTURE AS APPROVED BY THE ENGINEER.

NUMBER	DATE	REVISION	APPROVED

STATE OF TEXAS
GREGORY C. CALKINS
111309
LICENSED
PROFESSIONAL ENGINEER
9/28/2020

Binkley & Barfield, Inc
consulting engineers
Texas Registration Number F-257

CEDAR PARK

ANDERSON MILL ROAD
EROSION CONTROL PLANS
STA 14+50 - STA 19+00

DESIGN BY:	GCC	SCALE:	1"=40'
DRAWN BY:	DSH		
CHECKED BY:	BMB		
APPROVED BY:	BDR	SHEET:	2 OF 14
PROJECT NO:	156402		
DATE:	9/28/2020	PAGE:	132

9/28/2020
1:24:08 PM
T:\156402*Anderson*Mill*Road\CADD\SHEETS\EVEC01*AM*02.dgn

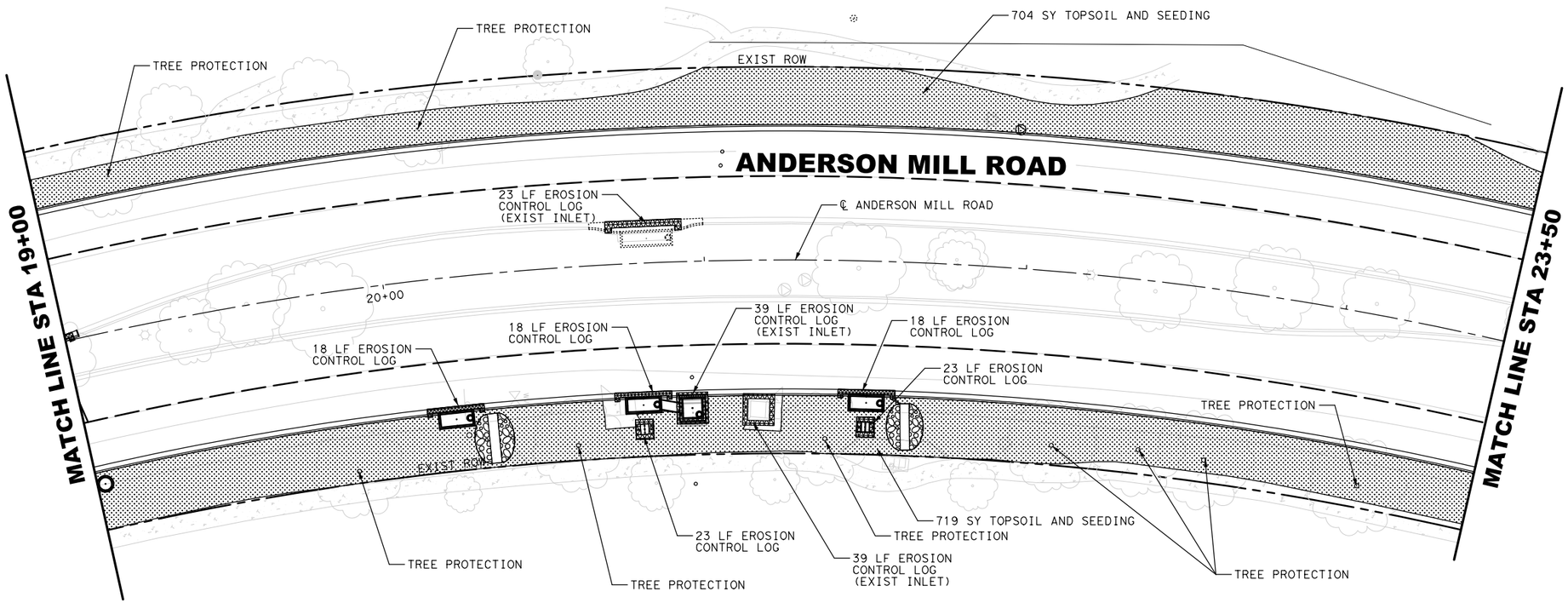

0′ 10′ 20′ 40′
SCALE: 1"=40′

LEGEND

- ROCK BERM
- SCF — SEDIMENT CONTROL FENCE
- EROSION CONTROL LOG
- TOPSOIL AND SEEDING

EROSION AND SEDIMENTATION CONTROL NOTES:

1. EROSION CONTROL MEASURES, SITE WORK, AND RESTORATION WORK SHALL BE IN ACCORDANCE WITH THE CITY OF CEDAR PARK'S SUBDIVISION CODE AND CONSTRUCTION STANDARDS MANUAL, EXCEPT AS NOTED BELOW AND APPROVED BY CITY COUNCIL.

2. SLOPES SHALL BE SODDED OR SEEDED WITH THE APPROPRIATE GRASS, GRASS MIXTURES, OR GROUND COVER SUITABLE TO THE AREA AND SEASON TO WHICH THEY ARE APPLIED.

3. SILT FENCES, ROCK BERMS, AND SIMILARLY RECOGNIZED TECHNIQUES AND MATERIALS SHALL BE EMPLOYED DURING CONSTRUCTION TO PREVENT POINT SOURCE SEDIMENTATION LOADING OF DOWNSTREAM FACILITIES. SUCH INSTALLATION SHALL BE REGULARLY INSPECTED BY THE CITY OF CEDAR PARK FOR EFFECTIVENESS. ADDITIONAL MEASURES MAY BE REQUIRED IF, IN THE OPINION OF THE CITY ENGINEER, THEY ARE WARRANTED.

4. ALL TEMPORARY EROSION CONTROL MEASURES SHALL NOT BE REMOVED UNTIL FINAL INSPECTION AND APPROVAL OF THE PROJECT BY THE ENGINEER.

5. IT SHALL BE THE RESPONSIBILITY OF THE CONTRACTOR TO MAINTAIN ALL TEMPORARY EROSION CONTROL STRUCTURES AND TO REMOVE EACH STRUCTURE AS APPROVED BY THE ENGINEER.

NUMBER	DATE	REVISION	APPROVED

STATE OF TEXAS
GREGORY C. CALKINS
111309
LICENSED
PROFESSIONAL ENGINEER
9/28/2020

Binkley & Barfield, Inc
consulting engineers
Texas Registration Number F-257

CEDAR PARK

ANDERSON MILL ROAD
EROSION CONTROL PLANS
STA 19+00 - STA 23+50

DESIGN BY:	GCC	SCALE:	1"=40′
DRAWN BY:	DSH		
CHECKED BY:	BMB		
APPROVED BY:	BDR	SHEET:	3 OF 14
PROJECT NO:	156402		
DATE:	9/28/2020	PAGE:	133

9/28/2020
1:24:11 PM
T:\156402*Anderson*Mill*Road\CADD\SHEETS\EVEC01*AM*03.dgn

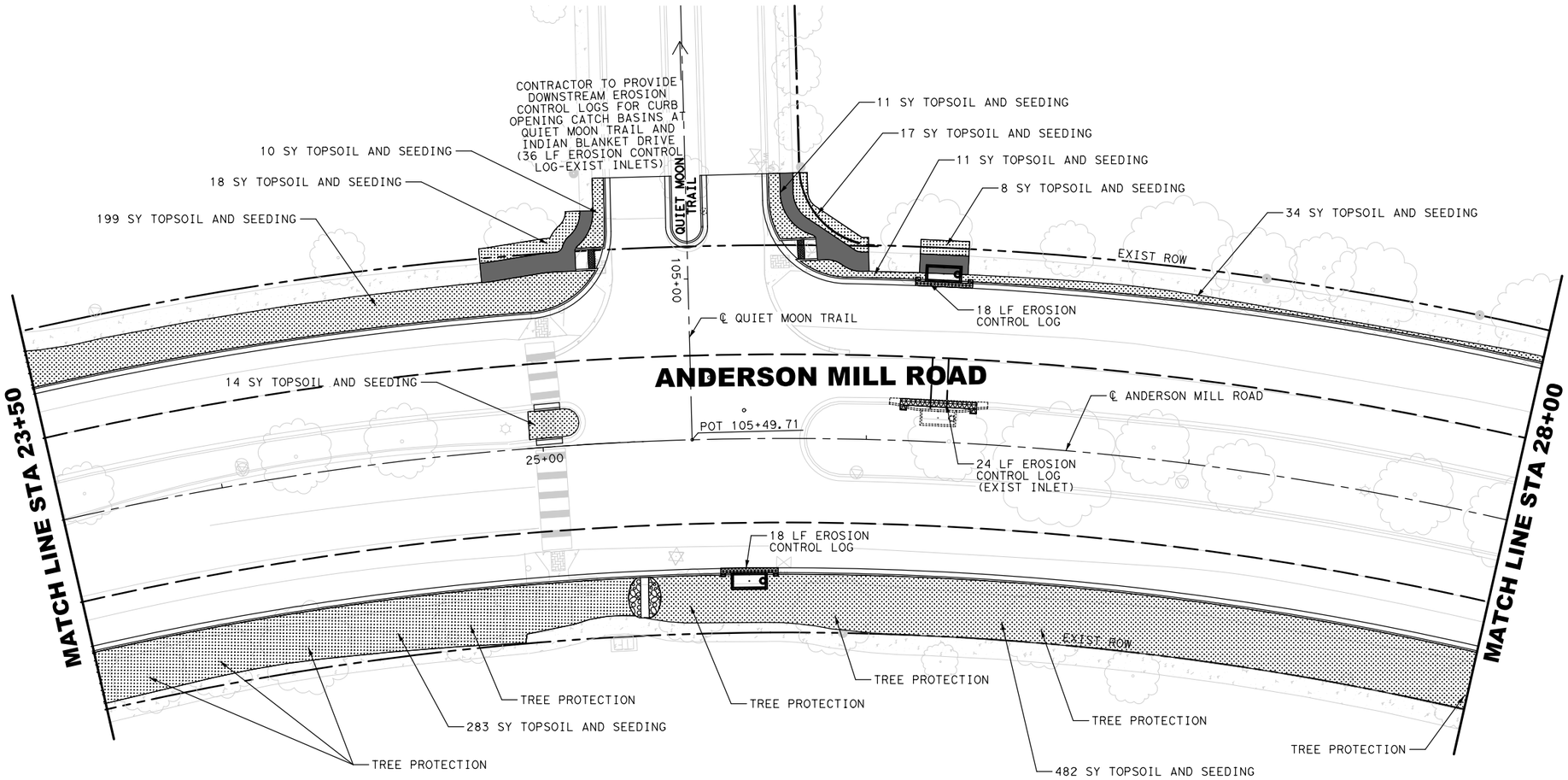

0′ 10′ 20′ 40′
SCALE: 1"=40′

LEGEND

- ROCK BERM
- SCF — SEDIMENT CONTROL FENCE
- EROSION CONTROL LOG
- TOPSOIL AND SEEDING

EROSION AND SEDIMENTATION CONTROL NOTES:

1. EROSION CONTROL MEASURES, SITE WORK, AND RESTORATION WORK SHALL BE IN ACCORDANCE WITH THE CITY OF CEDAR PARK'S SUBDIVISION CODE AND CONSTRUCTION STANDARDS MANUAL, EXCEPT AS NOTED BELOW AND APPROVED BY CITY COUNCIL.

2. SLOPES SHALL BE SODDED OR SEEDED WITH THE APPROPRIATE GRASS, GRASS MIXTURES, OR GROUND COVER SUITABLE TO THE AREA AND SEASON TO WHICH THEY ARE APPLIED.

3. SILT FENCES, ROCK BERMS, AND SIMILARLY RECOGNIZED TECHNIQUES AND MATERIALS SHALL BE EMPLOYED DURING CONSTRUCTION TO PREVENT POINT SOURCE SEDIMENTATION LOADING OF DOWNSTREAM FACILITIES. SUCH INSTALLATION SHALL BE REGULARLY INSPECTED BY THE CITY OF CEDAR PARK FOR EFFECTIVENESS. ADDITIONAL MEASURES MAY BE REQUIRED IF, IN THE OPINION OF THE CITY ENGINEER, THEY ARE WARRANTED.

4. ALL TEMPORARY EROSION CONTROL MEASURES SHALL NOT BE REMOVED UNTIL FINAL INSPECTION AND APPROVAL OF THE PROJECT BY THE ENGINEER.

5. IT SHALL BE THE RESPONSIBILITY OF THE CONTRACTOR TO MAINTAIN ALL TEMPORARY EROSION CONTROL STRUCTURES AND TO REMOVE EACH STRUCTURE AS APPROVED BY THE ENGINEER.

NUMBER	DATE	REVISION	APPROVED

STATE OF TEXAS
GREGORY C. CALKINS
111309
LICENSED
PROFESSIONAL ENGINEER
9/28/2020

Binkley & Barfield, Inc
consulting engineers
Texas Registration Number F-257

CEDAR PARK

ANDERSON MILL ROAD
EROSION CONTROL PLANS
STA 23+50 - STA 28+00

DESIGN BY:	GCC	SCALE:	1"=40′
DRAWN BY:	DSH		
CHECKED BY:	BMB	SHEET:	4 OF 14
APPROVED BY:	BDR		
PROJECT NO:	156402	PAGE:	134
DATE:	9/28/2020		

9/28/2020
1:24:15 PM
T:\156402*Anderson*Mill*Road\CADD\SHEETS\EVEC01*AM*04.dgn

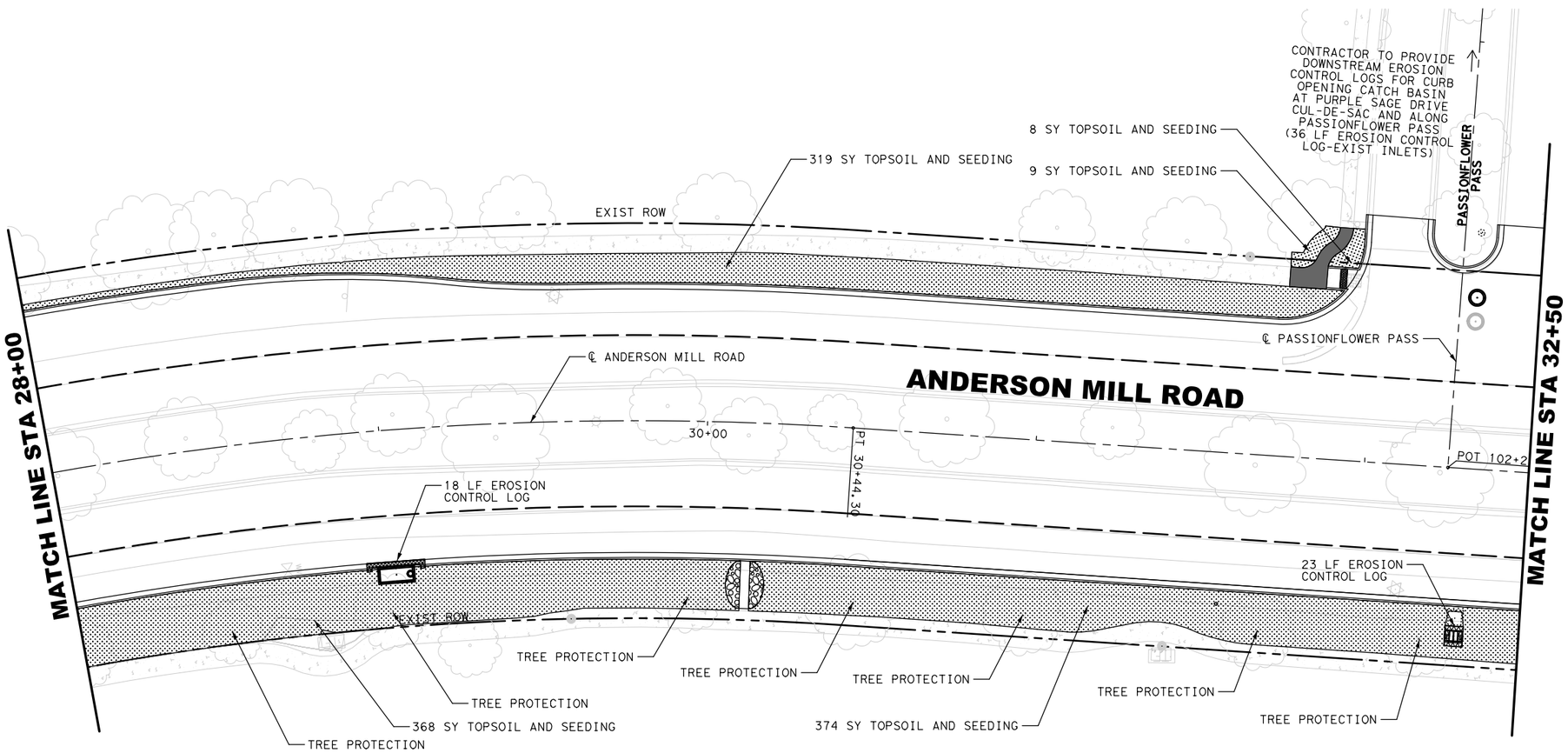

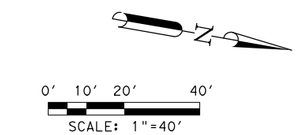

LEGEND

- ROCK BERM
- SCF — SEDIMENT CONTROL FENCE
- EROSION CONTROL LOG
- TOPSOIL AND SEEDING

EROSION AND SEDIMENTATION CONTROL NOTES:

1. EROSION CONTROL MEASURES, SITE WORK, AND RESTORATION WORK SHALL BE IN ACCORDANCE WITH THE CITY OF CEDAR PARK'S SUBDIVISION CODE AND CONSTRUCTION STANDARDS MANUAL, EXCEPT AS NOTED BELOW AND APPROVED BY CITY COUNCIL.

2. SLOPES SHALL BE SODDED OR SEEDED WITH THE APPROPRIATE GRASS, GRASS MIXTURES, OR GROUND COVER SUITABLE TO THE AREA AND SEASON TO WHICH THEY ARE APPLIED.

3. SILT FENCES, ROCK BERMS, AND SIMILARLY RECOGNIZED TECHNIQUES AND MATERIALS SHALL BE EMPLOYED DURING CONSTRUCTION TO PREVENT POINT SOURCE SEDIMENTATION LOADING OF DOWNSTREAM FACILITIES. SUCH INSTALLATION SHALL BE REGULARLY INSPECTED BY THE CITY OF CEDAR PARK FOR EFFECTIVENESS. ADDITIONAL MEASURES MAY BE REQUIRED IF, IN THE OPINION OF THE CITY ENGINEER, THEY ARE WARRANTED.

4. ALL TEMPORARY EROSION CONTROL MEASURES SHALL NOT BE REMOVED UNTIL FINAL INSPECTION AND APPROVAL OF THE PROJECT BY THE ENGINEER.

5. IT SHALL BE THE RESPONSIBILITY OF THE CONTRACTOR TO MAINTAIN ALL TEMPORARY EROSION CONTROL STRUCTURES AND TO REMOVE EACH STRUCTURE AS APPROVED BY THE ENGINEER.

NUMBER	DATE	REVISION	APPROVED

STATE OF TEXAS
GREGORY C. CALKINS
111309
LICENSED
PROFESSIONAL ENGINEER
9/28/2020

Binkley & Barfield, Inc
consulting engineers
Texas Registration Number F-257

CEDAR PARK

ANDERSON MILL ROAD
EROSION CONTROL PLANS
STA 28+00 - STA 32+50

DESIGN BY:	GCC	SCALE:	1"=40′
DRAWN BY:	DSH		
CHECKED BY:	BMB	SHEET:	5 OF 14
APPROVED BY:	BDR		
PROJECT NO:	156402	PAGE:	135
DATE:	9/28/2020		

9/28/2020
1:24:19 PM
T:\156402*Anderson*Mill*Road\CADD\SHEETS\EVEC01*AM*05.dgn

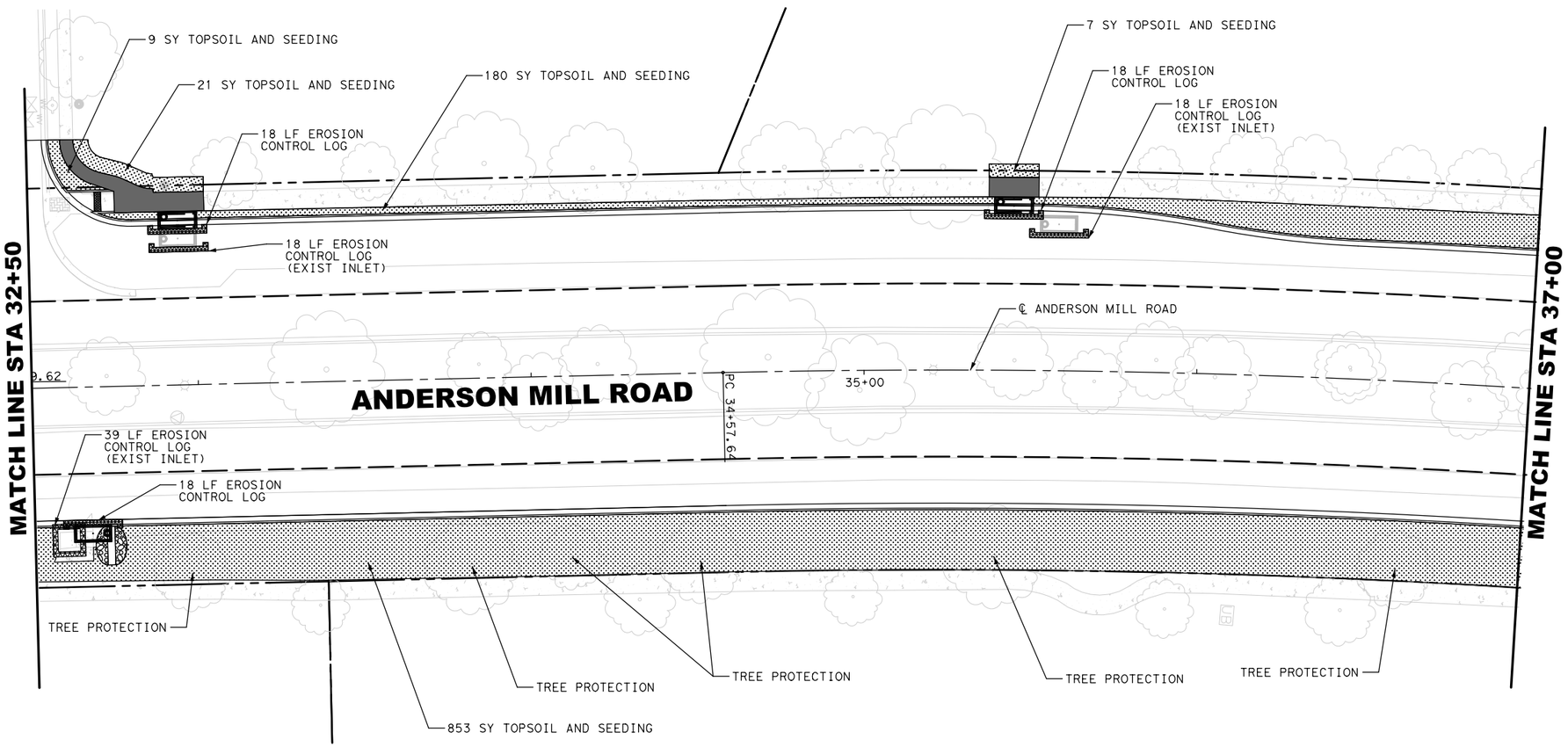

0′ 10′ 20′ 40′
SCALE: 1"=40′

LEGEND

- ROCK BERM
- SCF — SEDIMENT CONTROL FENCE
- EROSION CONTROL LOG
- TOPSOIL AND SEEDING

EROSION AND SEDIMENTATION CONTROL NOTES:

1. EROSION CONTROL MEASURES, SITE WORK, AND RESTORATION WORK SHALL BE IN ACCORDANCE WITH THE CITY OF CEDAR PARK'S SUBDIVISION CODE AND CONSTRUCTION STANDARDS MANUAL, EXCEPT AS NOTED BELOW AND APPROVED BY CITY COUNCIL.

2. SLOPES SHALL BE SODDED OR SEEDED WITH THE APPROPRIATE GRASS, GRASS MIXTURES, OR GROUND COVER SUITABLE TO THE AREA AND SEASON TO WHICH THEY ARE APPLIED.

3. SILT FENCES, ROCK BERMS, AND SIMILARLY RECOGNIZED TECHNIQUES AND MATERIALS SHALL BE EMPLOYED DURING CONSTRUCTION TO PREVENT POINT SOURCE SEDIMENTATION LOADING OF DOWNSTREAM FACILITIES. SUCH INSTALLATION SHALL BE REGULARLY INSPECTED BY THE CITY OF CEDAR PARK FOR EFFECTIVENESS. ADDITIONAL MEASURES MAY BE REQUIRED IF, IN THE OPINION OF THE CITY ENGINEER, THEY ARE WARRANTED.

4. ALL TEMPORARY EROSION CONTROL MEASURES SHALL NOT BE REMOVED UNTIL FINAL INSPECTION AND APPROVAL OF THE PROJECT BY THE ENGINEER.

5. IT SHALL BE THE RESPONSIBILITY OF THE CONTRACTOR TO MAINTAIN ALL TEMPORARY EROSION CONTROL STRUCTURES AND TO REMOVE EACH STRUCTURE AS APPROVED BY THE ENGINEER.

NUMBER	DATE	REVISION	APPROVED

STATE OF TEXAS
GREGORY C. CALKINS
111309
LICENSED
PROFESSIONAL ENGINEER
9/28/2020

Binkley & Barfield, Inc
consulting engineers
Texas Registration Number F-257

CEDAR PARK

ANDERSON MILL ROAD
EROSION CONTROL PLANS
STA 32+50 - STA 37+00

DESIGN BY:	GCC	SCALE:	1"=40′
DRAWN BY:	DSH		
CHECKED BY:	BMB	SHEET:	6 OF 14
APPROVED BY:	BDR		
PROJECT NO:	156402	PAGE:	136
DATE:	9/28/2020		

9/28/2020
1:24:25 PM
T:\156402*Anderson*Mill*Road\CADD\SHEETS\EVEC01*AM*06.dgn

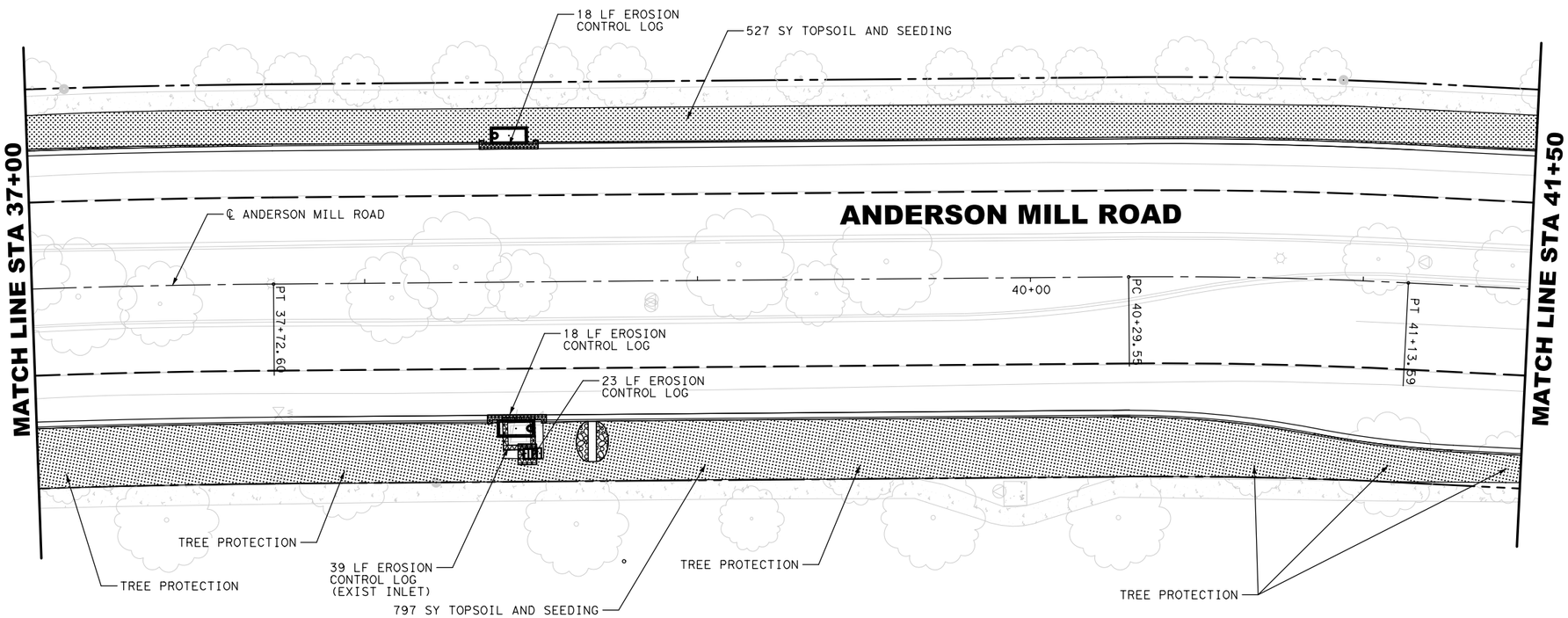

0′ 10′ 20′ 40′
SCALE: 1"=40′

LEGEND

- ROCK BERM
- SCF — SEDIMENT CONTROL FENCE
- EROSION CONTROL LOG
- TOPSOIL AND SEEDING

EROSION AND SEDIMENTATION CONTROL NOTES:

1. EROSION CONTROL MEASURES, SITE WORK, AND RESTORATION WORK SHALL BE IN ACCORDANCE WITH THE CITY OF CEDAR PARK'S SUBDIVISION CODE AND CONSTRUCTION STANDARDS MANUAL, EXCEPT AS NOTED BELOW AND APPROVED BY CITY COUNCIL.

2. SLOPES SHALL BE SODDED OR SEEDED WITH THE APPROPRIATE GRASS, GRASS MIXTURES, OR GROUND COVER SUITABLE TO THE AREA AND SEASON TO WHICH THEY ARE APPLIED.

3. SILT FENCES, ROCK BERMS, AND SIMILARLY RECOGNIZED TECHNIQUES AND MATERIALS SHALL BE EMPLOYED DURING CONSTRUCTION TO PREVENT POINT SOURCE SEDIMENTATION LOADING OF DOWNSTREAM FACILITIES. SUCH INSTALLATION SHALL BE REGULARLY INSPECTED BY THE CITY OF CEDAR PARK FOR EFFECTIVENESS. ADDITIONAL MEASURES MAY BE REQUIRED IF, IN THE OPINION OF THE CITY ENGINEER, THEY ARE WARRANTED.

4. ALL TEMPORARY EROSION CONTROL MEASURES SHALL NOT BE REMOVED UNTIL FINAL INSPECTION AND APPROVAL OF THE PROJECT BY THE ENGINEER.

5. IT SHALL BE THE RESPONSIBILITY OF THE CONTRACTOR TO MAINTAIN ALL TEMPORARY EROSION CONTROL STRUCTURES AND TO REMOVE EACH STRUCTURE AS APPROVED BY THE ENGINEER.

NUMBER	DATE	REVISION	APPROVED

STATE OF TEXAS
GREGORY C. CALKINS
111309
LICENSED
PROFESSIONAL ENGINEER
9/28/2020

Binkley & Barfield, Inc
consulting engineers
Texas Registration Number F-257

CEDAR PARK

ANDERSON MILL ROAD
EROSION CONTROL PLANS
STA 37+00 - STA 41+50

DESIGN BY:	GCC	SCALE:	1"=40′
DRAWN BY:	DSH		
CHECKED BY:	BMB	SHEET:	7 OF 14
APPROVED BY:	BDR		
PROJECT NO:	156402	PAGE:	137
DATE:	9/28/2020		

9/28/2020
1:24:30 PM
T:\156402*Anderson*Mill*Road\CADD\SHEETS\EVEC01*AM*07.dgn

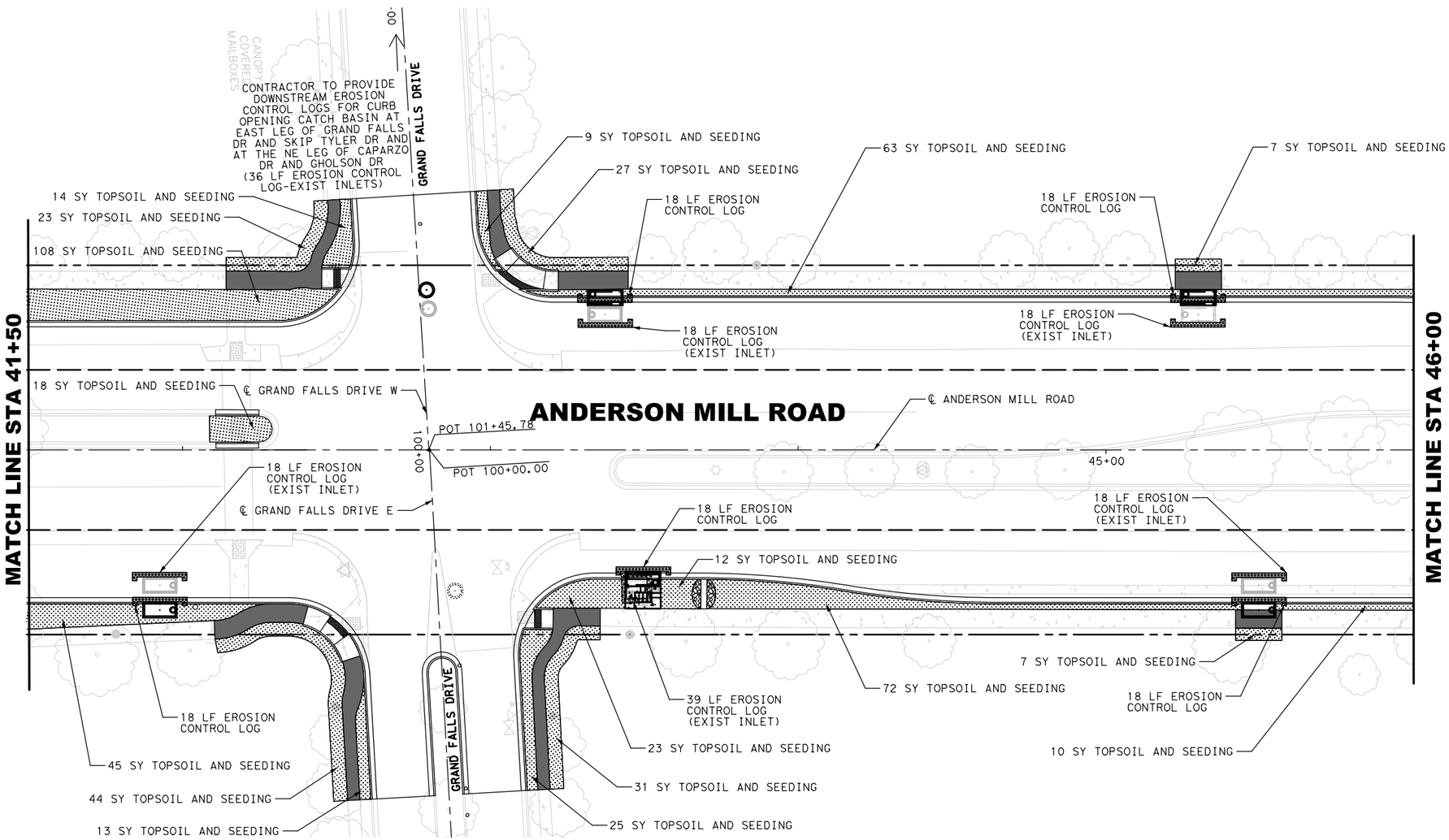

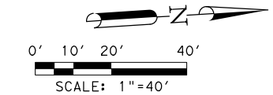

LEGEND

- ROCK BERM
- SCF — SEDIMENT CONTROL FENCE
- EROSION CONTROL LOG
- TOPSOIL AND SEEDING

EROSION AND SEDIMENTATION CONTROL NOTES:

1. EROSION CONTROL MEASURES, SITE WORK, AND RESTORATION WORK SHALL BE IN ACCORDANCE WITH THE CITY OF CEDAR PARK'S SUBDIVISION CODE AND CONSTRUCTION STANDARDS MANUAL, EXCEPT AS NOTED BELOW AND APPROVED BY CITY COUNCIL.

2. SLOPES SHALL BE SODDED OR SEEDED WITH THE APPROPRIATE GRASS, GRASS MIXTURES, OR GROUND COVER SUITABLE TO THE AREA AND SEASON TO WHICH THEY ARE APPLIED.

3. SILT FENCES, ROCK BERMS, AND SIMILARLY RECOGNIZED TECHNIQUES AND MATERIALS SHALL BE EMPLOYED DURING CONSTRUCTION TO PREVENT POINT SOURCE SEDIMENTATION LOADING OF DOWNSTREAM FACILITIES. SUCH INSTALLATION SHALL BE REGULARLY INSPECTED BY THE CITY OF CEDAR PARK FOR EFFECTIVENESS. ADDITIONAL MEASURES MAY BE REQUIRED IF, IN THE OPINION OF THE CITY ENGINEER, THEY ARE WARRANTED.

4. ALL TEMPORARY EROSION CONTROL MEASURES SHALL NOT BE REMOVED UNTIL FINAL INSPECTION AND APPROVAL OF THE PROJECT BY THE ENGINEER.

5. IT SHALL BE THE RESPONSIBILITY OF THE CONTRACTOR TO MAINTAIN ALL TEMPORARY EROSION CONTROL STRUCTURES AND TO REMOVE EACH STRUCTURE AS APPROVED BY THE ENGINEER.

NUMBER	DATE	REVISION	APPROVED

STATE OF TEXAS
GREGORY C. CALKINS
111309
LICENSED
PROFESSIONAL ENGINEER
9/28/2020

Binkley & Barfield, Inc
consulting engineers
Texas Registration Number F-257

CEDAR PARK

ANDERSON MILL ROAD
EROSION CONTROL PLANS
STA 41+50 - STA 46+00

DESIGN BY:	GCC	SCALE:	1"=40′
DRAWN BY:	DSH		
CHECKED BY:	BMB		
APPROVED BY:	BDR	SHEET:	8 OF 14
PROJECT NO:	156402		
DATE:	9/28/2020	PAGE:	138

9/28/2020
1:24:32 PM
I:\156402*Anderson*Mill*Road\CADD\SHEETS\EVEC01*AM*08.dgn

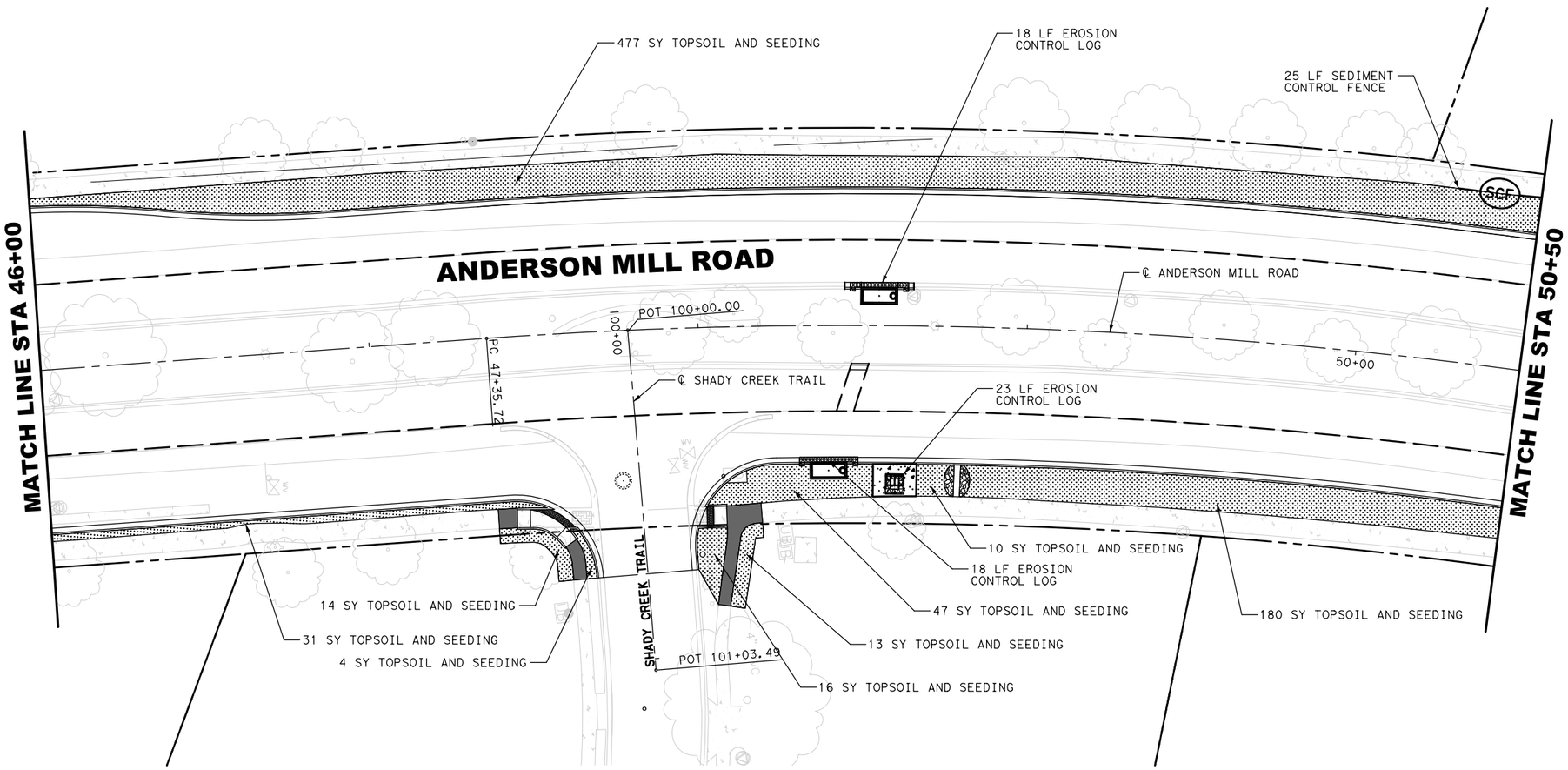

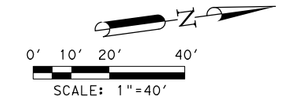

LEGEND

- ROCK BERM
- SCF — SEDIMENT CONTROL FENCE
- EROSION CONTROL LOG
- TOPSOIL AND SEEDING

EROSION AND SEDIMENTATION CONTROL NOTES:

1. EROSION CONTROL MEASURES, SITE WORK, AND RESTORATION WORK SHALL BE IN ACCORDANCE WITH THE CITY OF CEDAR PARK'S SUBDIVISION CODE AND CONSTRUCTION STANDARDS MANUAL, EXCEPT AS NOTED BELOW AND APPROVED BY CITY COUNCIL.

2. SLOPES SHALL BE SODDED OR SEEDED WITH THE APPROPRIATE GRASS, GRASS MIXTURES, OR GROUND COVER SUITABLE TO THE AREA AND SEASON TO WHICH THEY ARE APPLIED.

3. SILT FENCES, ROCK BERMS, AND SIMILARLY RECOGNIZED TECHNIQUES AND MATERIALS SHALL BE EMPLOYED DURING CONSTRUCTION TO PREVENT POINT SOURCE SEDIMENTATION LOADING OF DOWNSTREAM FACILITIES. SUCH INSTALLATION SHALL BE REGULARLY INSPECTED BY THE CITY OF CEDAR PARK FOR EFFECTIVENESS. ADDITIONAL MEASURES MAY BE REQUIRED IF, IN THE OPINION OF THE CITY ENGINEER, THEY ARE WARRANTED.

4. ALL TEMPORARY EROSION CONTROL MEASURES SHALL NOT BE REMOVED UNTIL FINAL INSPECTION AND APPROVAL OF THE PROJECT BY THE ENGINEER.

5. IT SHALL BE THE RESPONSIBILITY OF THE CONTRACTOR TO MAINTAIN ALL TEMPORARY EROSION CONTROL STRUCTURES AND TO REMOVE EACH STRUCTURE AS APPROVED BY THE ENGINEER.

NUMBER	DATE	REVISION	APPROVED

STATE OF TEXAS
GREGORY C. CALKINS
111309
LICENSED
PROFESSIONAL ENGINEER
9/28/2020

Binkley & Barfield, Inc
consulting engineers
Texas Registration Number F-257

CEDAR PARK

ANDERSON MILL ROAD
EROSION CONTROL PLANS
STA 46+00 - STA 50+50

DESIGN BY:	GCC	SCALE:	1"=40′
DRAWN BY:	DSH		
CHECKED BY:	BMB		
APPROVED BY:	BDR	SHEET:	9 OF 14
PROJECT NO:	156402		
DATE:	9/28/2020	PAGE:	139

9/28/2020
1:24:37 PM
I:\156402*Anderson*Mill*Road\CADD\SHEETS\EVEC01*AM*09.dgn

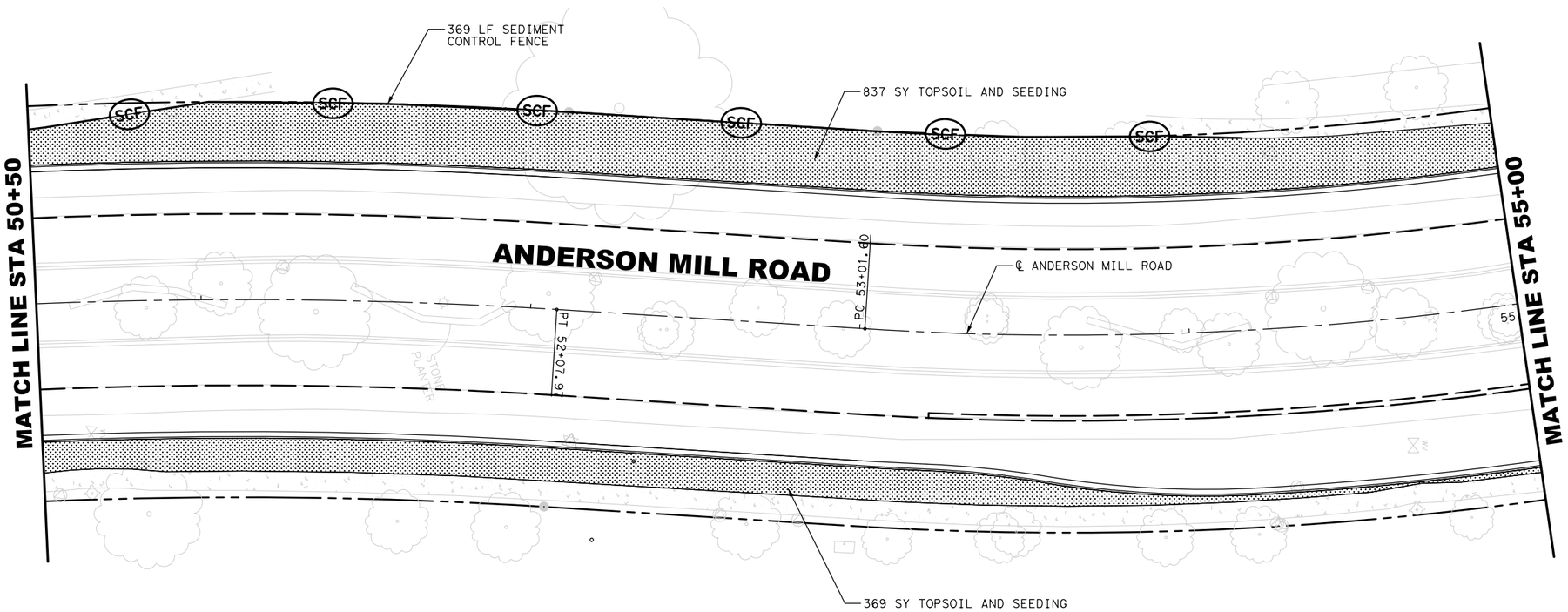

0′ 10′ 20′ 40′
SCALE: 1"=40′

LEGEND

- ROCK BERM
- SCF — SEDIMENT CONTROL FENCE
- EROSION CONTROL LOG
- TOPSOIL AND SEEDING

EROSION AND SEDIMENTATION CONTROL NOTES:

1. EROSION CONTROL MEASURES, SITE WORK, AND RESTORATION WORK SHALL BE IN ACCORDANCE WITH THE CITY OF CEDAR PARK'S SUBDIVISION CODE AND CONSTRUCTION STANDARDS MANUAL, EXCEPT AS NOTED BELOW AND APPROVED BY CITY COUNCIL.

2. SLOPES SHALL BE SODDED OR SEEDED WITH THE APPROPRIATE GRASS, GRASS MIXTURES, OR GROUND COVER SUITABLE TO THE AREA AND SEASON TO WHICH THEY ARE APPLIED.

3. SILT FENCES, ROCK BERMS, AND SIMILARLY RECOGNIZED TECHNIQUES AND MATERIALS SHALL BE EMPLOYED DURING CONSTRUCTION TO PREVENT POINT SOURCE SEDIMENTATION LOADING OF DOWNSTREAM FACILITIES. SUCH INSTALLATION SHALL BE REGULARLY INSPECTED BY THE CITY OF CEDAR PARK FOR EFFECTIVENESS. ADDITIONAL MEASURES MAY BE REQUIRED IF, IN THE OPINION OF THE CITY ENGINEER, THEY ARE WARRANTED.

4. ALL TEMPORARY EROSION CONTROL MEASURES SHALL NOT BE REMOVED UNTIL FINAL INSPECTION AND APPROVAL OF THE PROJECT BY THE ENGINEER.

5. IT SHALL BE THE RESPONSIBILITY OF THE CONTRACTOR TO MAINTAIN ALL TEMPORARY EROSION CONTROL STRUCTURES AND TO REMOVE EACH STRUCTURE AS APPROVED BY THE ENGINEER.

NUMBER	DATE	REVISION	APPROVED

STATE OF TEXAS
GREGORY C. CALKINS
111309
LICENSED
PROFESSIONAL ENGINEER
9/28/2020

Binkley & Barfield, Inc
consulting engineers
Texas Registration Number F-257

CEDAR PARK

ANDERSON MILL ROAD
EROSION CONTROL PLANS
STA 50+50 - STA 55+00

DESIGN BY:	GCC	SCALE:	1"=40′
DRAWN BY:	DSH		
CHECKED BY:	BMB	SHEET:	10 OF 14
APPROVED BY:	BDR		
PROJECT NO:	156402	PAGE:	140
DATE:	9/28/2020		

9/28/2020
1:24:41 PM
I:\156402*Anderson*Mill*Road\CADD\SHEETS\EVEC01*AM*10.dgn

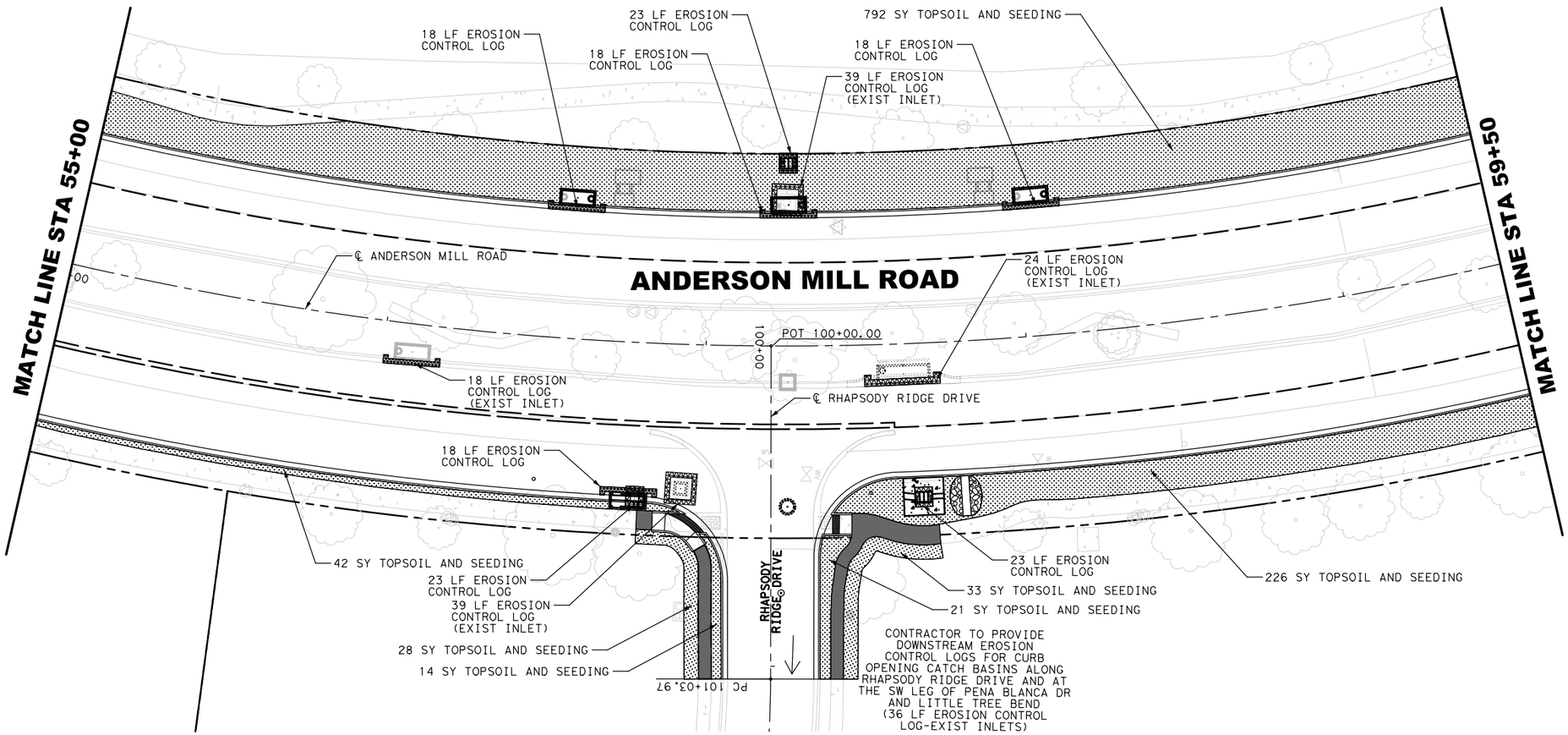

N

0′ 10′ 20′ 40′
SCALE: 1"=40′

LEGEND

- ROCK BERM
- SCF — SEDIMENT CONTROL FENCE
- EROSION CONTROL LOG
- TOPSOIL AND SEEDING

EROSION AND SEDIMENTATION CONTROL NOTES:

1. EROSION CONTROL MEASURES, SITE WORK, AND RESTORATION WORK SHALL BE IN ACCORDANCE WITH THE CITY OF CEDAR PARK'S SUBDIVISION CODE AND CONSTRUCTION STANDARDS MANUAL, EXCEPT AS NOTED BELOW AND APPROVED BY CITY COUNCIL.

2. SLOPES SHALL BE SODDED OR SEEDED WITH THE APPROPRIATE GRASS, GRASS MIXTURES, OR GROUND COVER SUITABLE TO THE AREA AND SEASON TO WHICH THEY ARE APPLIED.

3. SILT FENCES, ROCK BERMS, AND SIMILARLY RECOGNIZED TECHNIQUES AND MATERIALS SHALL BE EMPLOYED DURING CONSTRUCTION TO PREVENT POINT SOURCE SEDIMENTATION LOADING OF DOWNSTREAM FACILITIES. SUCH INSTALLATION SHALL BE REGULARLY INSPECTED BY THE CITY OF CEDAR PARK FOR EFFECTIVENESS. ADDITIONAL MEASURES MAY BE REQUIRED IF, IN THE OPINION OF THE CITY ENGINEER, THEY ARE WARRANTED.

4. ALL TEMPORARY EROSION CONTROL MEASURES SHALL NOT BE REMOVED UNTIL FINAL INSPECTION AND APPROVAL OF THE PROJECT BY THE ENGINEER.

5. IT SHALL BE THE RESPONSIBILITY OF THE CONTRACTOR TO MAINTAIN ALL TEMPORARY EROSION CONTROL STRUCTURES AND TO REMOVE EACH STRUCTURE AS APPROVED BY THE ENGINEER.

NUMBER	DATE	REVISION	APPROVED

STATE OF TEXAS
GREGORY C. CALKINS
111309
LICENSED
PROFESSIONAL ENGINEER
9/28/2020

Binkley & Barfield, Inc
consulting engineers
Texas Registration Number F-257

CEDAR PARK

ANDERSON MILL ROAD
EROSION CONTROL PLANS
STA 55+00 - STA 59+50

DESIGN BY:	GCC	SCALE:	1"=40′
DRAWN BY:	DSH		
CHECKED BY:	BMB	SHEET:	11 OF 14
APPROVED BY:	BDR		
PROJECT NO:	156402	PAGE:	141
DATE:	9/28/2020		

9/28/2020
1:24:45 PM
I:\156402*Anderson*Mill*Road\CADD\SHEETS\EVEC01*AM*11.dgn

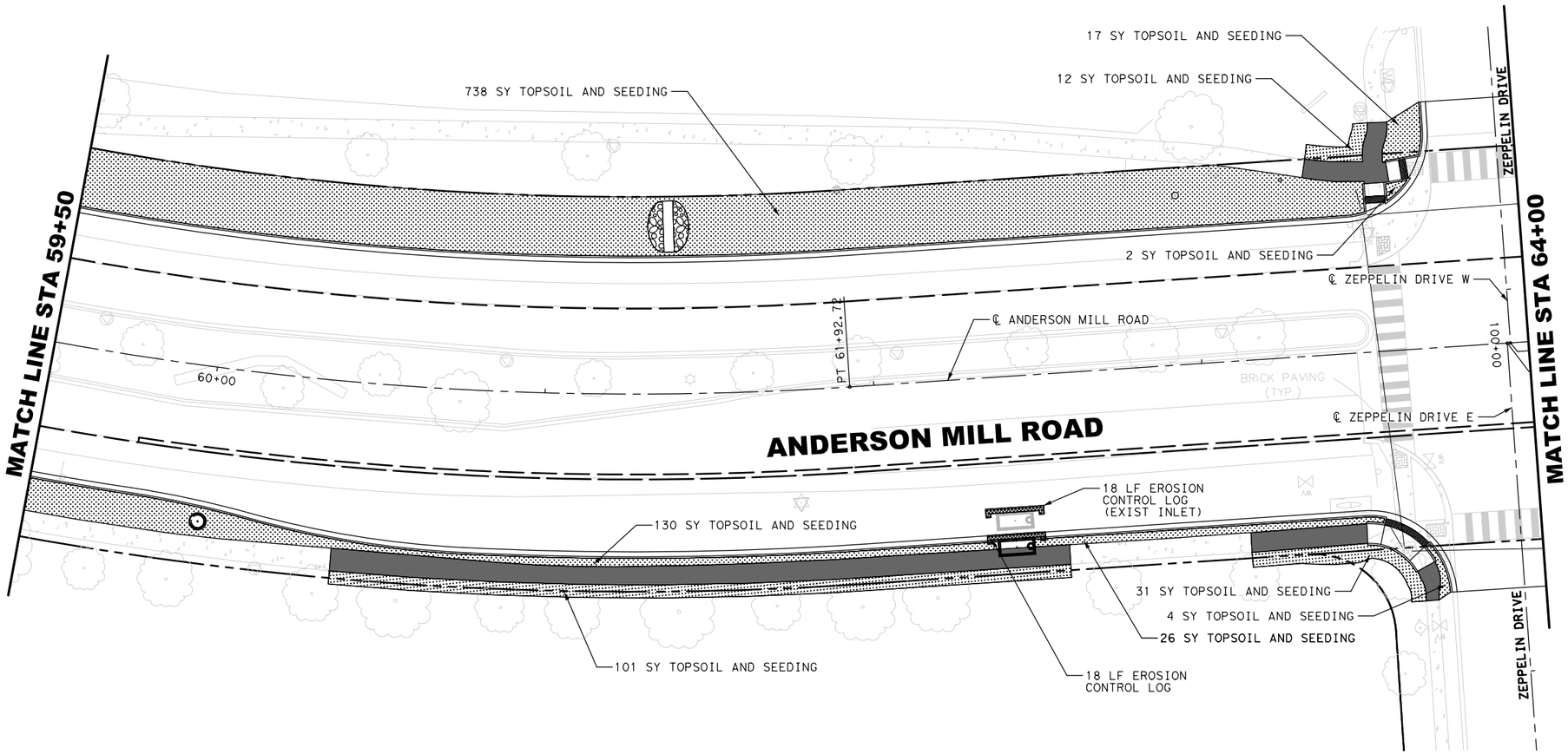

0' 10' 20' 40'
SCALE: 1"=40'

LEGEND

- ROCK BERM
- SCF — SEDIMENT CONTROL FENCE
- EROSION CONTROL LOG
- TOPSOIL AND SEEDING

EROSION AND SEDIMENTATION CONTROL NOTES:

1. EROSION CONTROL MEASURES, SITE WORK, AND RESTORATION WORK SHALL BE IN ACCORDANCE WITH THE CITY OF CEDAR PARK'S SUBDIVISION CODE AND CONSTRUCTION STANDARDS MANUAL, EXCEPT AS NOTED BELOW AND APPROVED BY CITY COUNCIL.

2. SLOPES SHALL BE SODDED OR SEEDED WITH THE APPROPRIATE GRASS, GRASS MIXTURES, OR GROUND COVER SUITABLE TO THE AREA AND SEASON TO WHICH THEY ARE APPLIED.

3. SILT FENCES, ROCK BERMS, AND SIMILARLY RECOGNIZED TECHNIQUES AND MATERIALS SHALL BE EMPLOYED DURING CONSTRUCTION TO PREVENT POINT SOURCE SEDIMENTATION LOADING OF DOWNSTREAM FACILITIES. SUCH INSTALLATION SHALL BE REGULARLY INSPECTED BY THE CITY OF CEDAR PARK FOR EFFECTIVENESS. ADDITIONAL MEASURES MAY BE REQUIRED IF, IN THE OPINION OF THE CITY ENGINEER, THEY ARE WARRANTED.

4. ALL TEMPORARY EROSION CONTROL MEASURES SHALL NOT BE REMOVED UNTIL FINAL INSPECTION AND APPROVAL OF THE PROJECT BY THE ENGINEER.

5. IT SHALL BE THE RESPONSIBILITY OF THE CONTRACTOR TO MAINTAIN ALL TEMPORARY EROSION CONTROL STRUCTURES AND TO REMOVE EACH STRUCTURE AS APPROVED BY THE ENGINEER.

NUMBER	DATE	REVISION	APPROVED

STATE OF TEXAS
GREGORY C. CALKINS
111309
LICENSED
PROFESSIONAL ENGINEER
9/28/2020

Binkley & Barfield, Inc
consulting engineers
Texas Registration Number F-257

CEDAR PARK

ANDERSON MILL ROAD
EROSION CONTROL PLANS
STA 59+50 - STA 64+00

DESIGN BY:	GCC	SCALE:	1"=40'
DRAWN BY:	DSH		
CHECKED BY:	BMB		
APPROVED BY:	BDR	SHEET:	12 OF 14
PROJECT NO:	156402		
DATE:	9/28/2020	PAGE:	142

9/28/2020
1:24:48 PM
T:\156402*Anderson*Mill*Road\CADD\SHEETS\EVEC01*AM*12.dgn

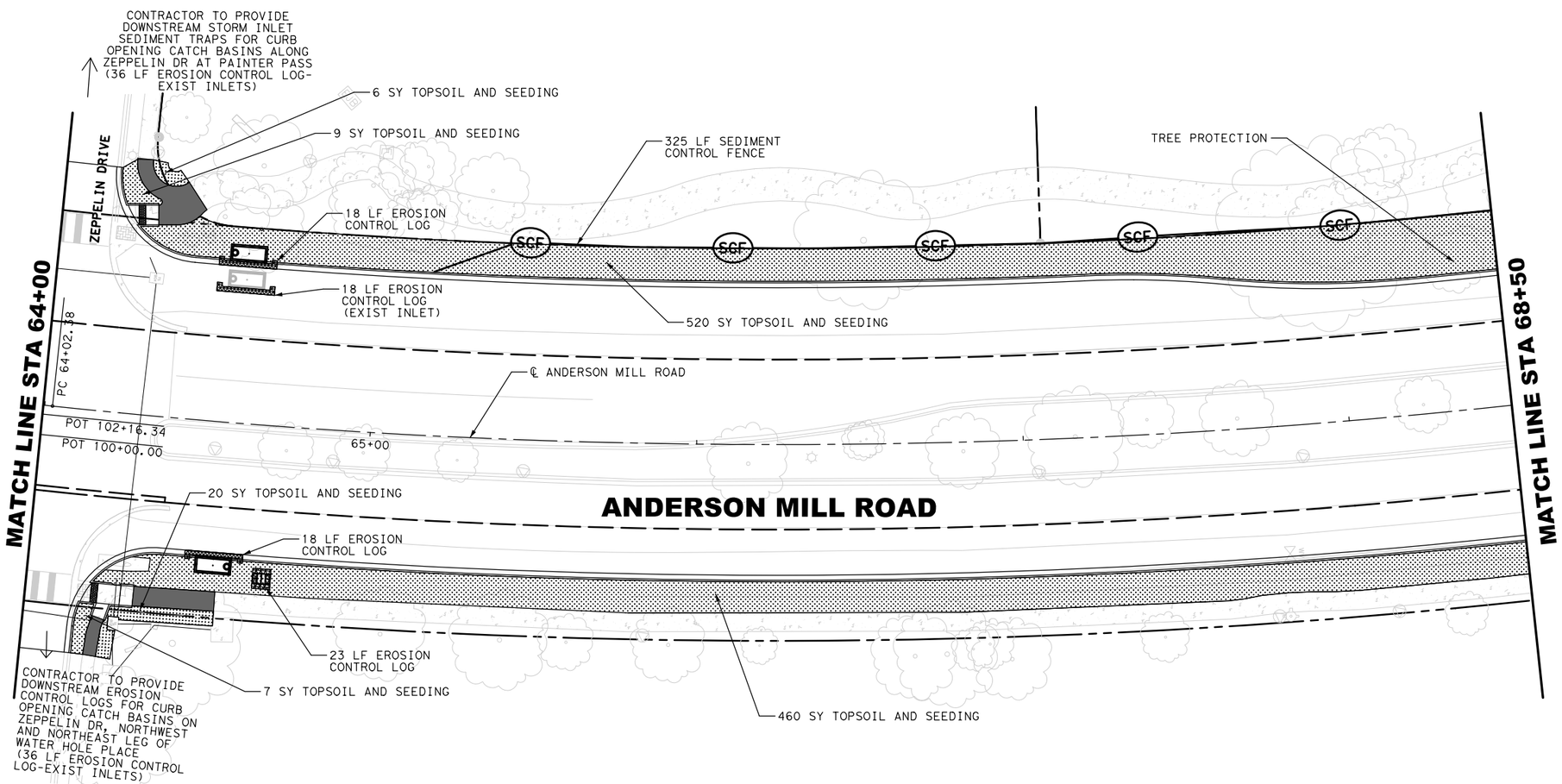

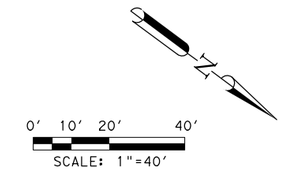

LEGEND

- ROCK BERM
- SEDIMENT CONTROL FENCE
- EROSION CONTROL LOG
- TOPSOIL AND SEEDING

EROSION AND SEDIMENTATION CONTROL NOTES:

1. EROSION CONTROL MEASURES, SITE WORK, AND RESTORATION WORK SHALL BE IN ACCORDANCE WITH THE CITY OF CEDAR PARK'S SUBDIVISION CODE AND CONSTRUCTION STANDARDS MANUAL, EXCEPT AS NOTED BELOW AND APPROVED BY CITY COUNCIL.

2. SLOPES SHALL BE SODDED OR SEEDED WITH THE APPROPRIATE GRASS, GRASS MIXTURES, OR GROUND COVER SUITABLE TO THE AREA AND SEASON TO WHICH THEY ARE APPLIED.

3. SILT FENCES, ROCK BERMS, AND SIMILARLY RECOGNIZED TECHNIQUES AND MATERIALS SHALL BE EMPLOYED DURING CONSTRUCTION TO PREVENT POINT SOURCE SEDIMENTATION LOADING OF DOWNSTREAM FACILITIES. SUCH INSTALLATION SHALL BE REGULARLY INSPECTED BY THE CITY OF CEDAR PARK FOR EFFECTIVENESS. ADDITIONAL MEASURES MAY BE REQUIRED IF, IN THE OPINION OF THE CITY ENGINEER, THEY ARE WARRANTED.

4. ALL TEMPORARY EROSION CONTROL MEASURES SHALL NOT BE REMOVED UNTIL FINAL INSPECTION AND APPROVAL OF THE PROJECT BY THE ENGINEER.

5. IT SHALL BE THE RESPONSIBILITY OF THE CONTRACTOR TO MAINTAIN ALL TEMPORARY EROSION CONTROL STRUCTURES AND TO REMOVE EACH STRUCTURE AS APPROVED BY THE ENGINEER.

NUMBER	DATE	REVISION	APPROVED

STATE OF TEXAS
GREGORY C. CALKINS
111309
LICENSED
PROFESSIONAL ENGINEER
9/28/2020

Binkley & Barfield, Inc
consulting engineers
Texas Registration Number F-257

CEDAR PARK

ANDERSON MILL ROAD
EROSION CONTROL PLANS
STA 64+00 - STA 68+50

DESIGN BY:	GCC	SCALE:	1"=40′
DRAWN BY:	DSH		
CHECKED BY:	BMB	SHEET:	13 OF 14
APPROVED BY:	BDR		
PROJECT NO:	156402	PAGE:	143
DATE:	9/28/2020		

9/28/2020
1:24:53 PM
T:\156402*Anderson*Mill*Road\CADD\SHEETS\EVEC01*AM*13.dgn

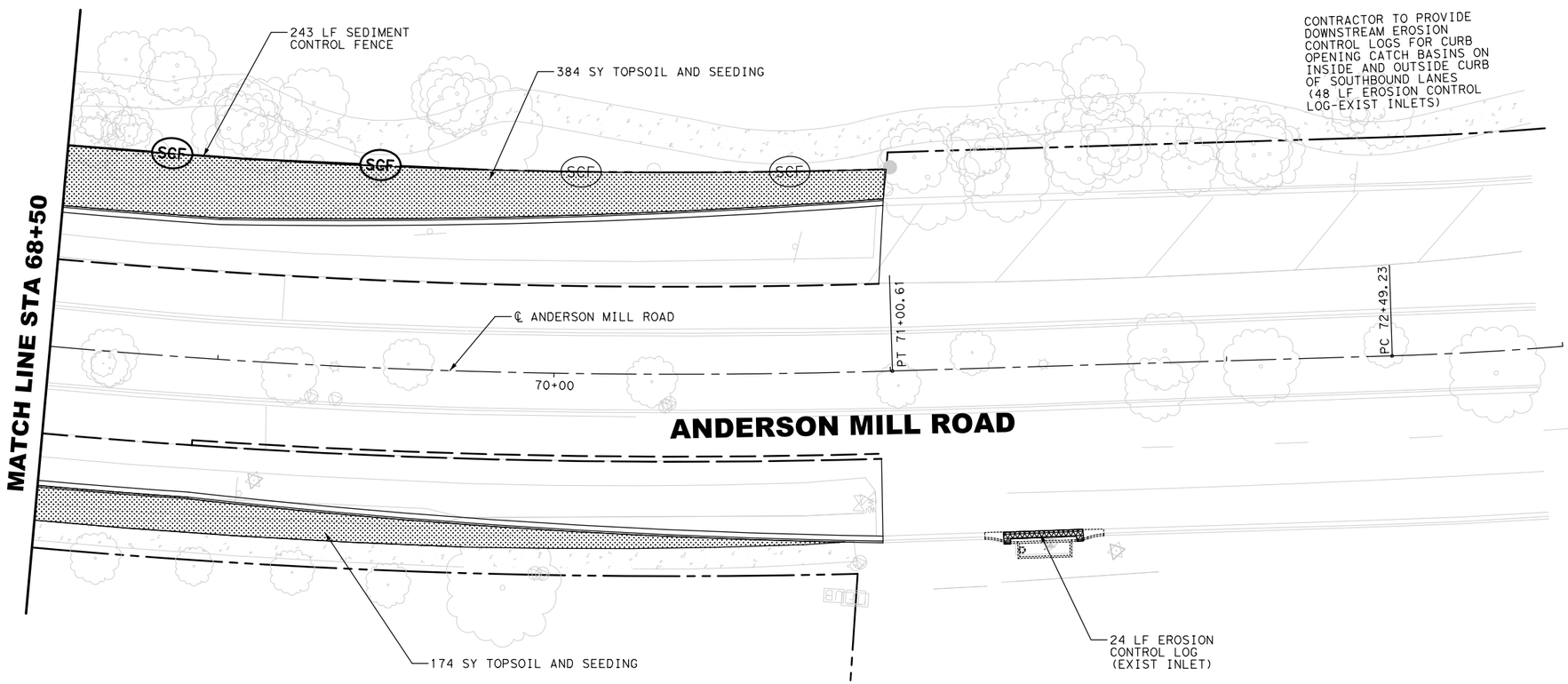

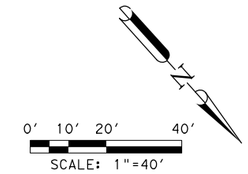

LEGEND

- ROCK BERM
- SCF — SEDIMENT CONTROL FENCE
- EROSION CONTROL LOG
- TOPSOIL AND SEEDING

EROSION AND SEDIMENTATION CONTROL NOTES:

1. EROSION CONTROL MEASURES, SITE WORK, AND RESTORATION WORK SHALL BE IN ACCORDANCE WITH THE CITY OF CEDAR PARK'S SUBDIVISION CODE AND CONSTRUCTION STANDARDS MANUAL, EXCEPT AS NOTED BELOW AND APPROVED BY CITY COUNCIL.

2. SLOPES SHALL BE SODDED OR SEEDED WITH THE APPROPRIATE GRASS, GRASS MIXTURES, OR GROUND COVER SUITABLE TO THE AREA AND SEASON TO WHICH THEY ARE APPLIED.

3. SILT FENCES, ROCK BERMS, AND SIMILARLY RECOGNIZED TECHNIQUES AND MATERIALS SHALL BE EMPLOYED DURING CONSTRUCTION TO PREVENT POINT SOURCE SEDIMENTATION LOADING OF DOWNSTREAM FACILITIES. SUCH INSTALLATION SHALL BE REGULARLY INSPECTED BY THE CITY OF CEDAR PARK FOR EFFECTIVENESS. ADDITIONAL MEASURES MAY BE REQUIRED IF, IN THE OPINION OF THE CITY ENGINEER, THEY ARE WARRANTED.

4. ALL TEMPORARY EROSION CONTROL MEASURES SHALL NOT BE REMOVED UNTIL FINAL INSPECTION AND APPROVAL OF THE PROJECT BY THE ENGINEER.

5. IT SHALL BE THE RESPONSIBILITY OF THE CONTRACTOR TO MAINTAIN ALL TEMPORARY EROSION CONTROL STRUCTURES AND TO REMOVE EACH STRUCTURE AS APPROVED BY THE ENGINEER.

NUMBER	DATE	REVISION	APPROVED

STATE OF TEXAS
GREGORY C. CALKINS
111309
LICENSED
PROFESSIONAL ENGINEER
9/28/2020

Binkley & Barfield, Inc
consulting engineers
Texas Registration Number F-257

CEDAR PARK

ANDERSON MILL ROAD
EROSION CONTROL PLANS
STA 68+50 TO END OF PROJECT

DESIGN BY:	GCC	SCALE:	1"=40'
DRAWN BY:	DSH		
CHECKED BY:	BMB		
APPROVED BY:	BDR	SHEET:	14 OF 14
PROJECT NO:	156402		
DATE:	9/28/2020	PAGE:	144

9/28/2020
1:24:57 PM
T:\156402*Anderson*Mill*Road\CADD\SHEETS\EVEC01*AM*14.dgn

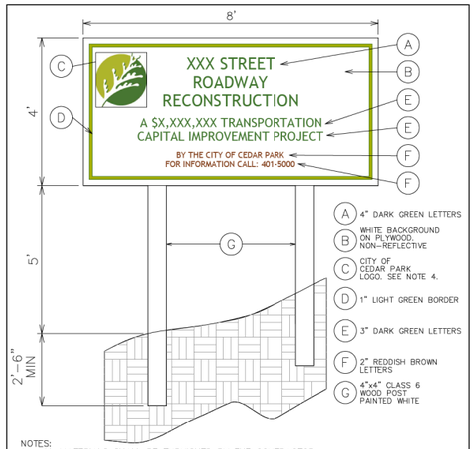

NOTES:
1. ALL MATERIALS SHALL BE FURNISHED BY THE CONTRACTOR.
2. IF SIGN IS USED IN PHASED CONSTRUCTION, POSTS SHALL BE MOUNTED ON SKIDS.
3. LETTERING SHALL BE CENTERED OF FONT TREBUCHET.
4. CITY OF CEDAR PARK LOGO GRAPHICS WILL BE PROVIDED TO CONTRACTOR IN ELECTRONIC FORMAT, IF LOGO WILL NOT FIT ON MAIN SIGN. CEDAR PARK LOGO CAN BE MOUNTED ON A SMALLER SIGN BELOW MAIN SIGN.
5. CONTRACTOR SHALL PROVIDE A DIGITAL PROOF OF SIGN TO BE REVIEWED AND APPROVED BY THE CITY OF CEDAR PARK ENGINEERING DEPARTMENT PRIOR TO MANUFACTURE.

PAINT REQUIREMENTS:
1. BACKGROUND AND POST (BLUE TONED WHITE 93-21667 CROSS ALLEN OR EQUAL).
2. DARK GREEN: PMS 364C, PMS 363U, OR PMS 289-1 (70C, 0M, 100Y, 40K)
3. LIGHT GREEN: PMS 383C, PMS 390U, OR PMS 304-3 (25C, 0M, 95Y, 20K)
4. REDDISH BROWN: PMS 7517C, PMS 7526U, OR PMS 52-1 (0C, 70M, 100Y, 40K)

CITY OF CEDAR PARK	CAPTIAL IMPROVEMENT PROJECT SIGN	
ISSUED: NOVEMBER 28, 2012 SCALE: NOT TO SCALE	THE ENGINEER ASSUMES RESPONSIBILITY FOR APPROPRIATE USE OF THIS STANDARD.	

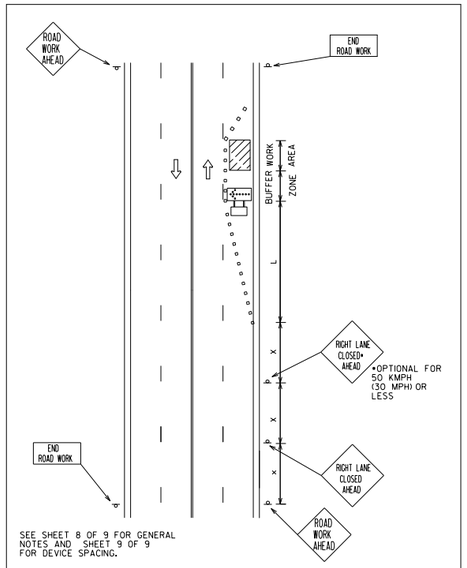

SEE SHEET 8 OF 9 FOR GENERAL NOTES AND SHEET 9 OF 9 FOR DEVICE SPACING.

CITY OF AUSTIN DEPARTMENT OF PUBLIC WORKS	ARTERIAL ONE LANE CLOSURE	
RECORD COPY SIGNED BY KERI JUAREZ 01/04/11 ADOPTED	THE ARCHITECT/ENGINEER ASSUMES RESPONSIBILITY FOR APPROPRIATE USE OF THIS STANDARD.	STANDARD NO. 804S-1 1 OF 9

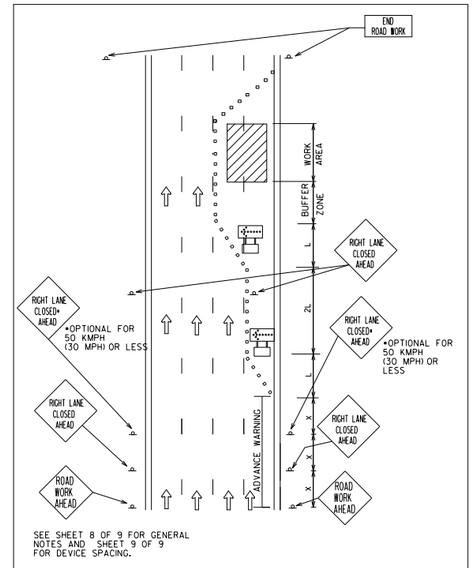

SEE SHEET 8 OF 9 FOR GENERAL NOTES AND SHEET 9 OF 9 FOR DEVICE SPACING.

CITY OF AUSTIN DEPARTMENT OF PUBLIC WORKS	ONE WAY ARTERIAL TWO-LANE CLOSURE	
RECORD COPY SIGNED BY KERI JUAREZ 01/04/11 ADOPTED	THE ARCHITECT/ENGINEER ASSUMES RESPONSIBILITY FOR APPROPRIATE USE OF THIS STANDARD.	STANDARD NO. 804S-1 2 OF 9

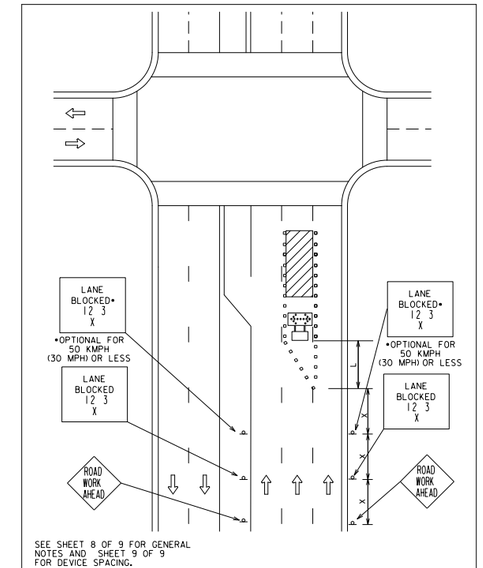

SEE SHEET 8 OF 9 FOR GENERAL NOTES AND SHEET 9 OF 9 FOR DEVICE SPACING.

CITY OF AUSTIN DEPARTMENT OF PUBLIC WORKS	TWO WAY, DIVIDED ARTERIAL ONE LANE CLOSURE	
RECORD COPY SIGNED BY KERI JUAREZ 01/04/11 ADOPTED	THE ARCHITECT/ENGINEER ASSUMES RESPONSIBILITY FOR APPROPRIATE USE OF THIS STANDARD.	STANDARD NO. 804S-1 3 OF 9

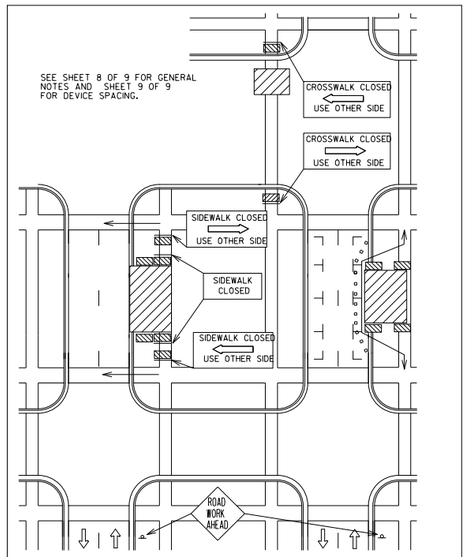

SEE SHEET 8 OF 9 FOR GENERAL NOTES AND SHEET 9 OF 9 FOR DEVICE SPACING.

CITY OF AUSTIN DEPARTMENT OF PUBLIC WORKS	BYPASS WALKWAY, SIDEWALK AND CROSSWALK CLOSURES	
RECORD COPY SIGNED BY KERI JUAREZ 01/04/11 ADOPTED	THE ARCHITECT/ENGINEER ASSUMES RESPONSIBILITY FOR APPROPRIATE USE OF THIS STANDARD.	STANDARD NO. 804S-1 4 OF 9

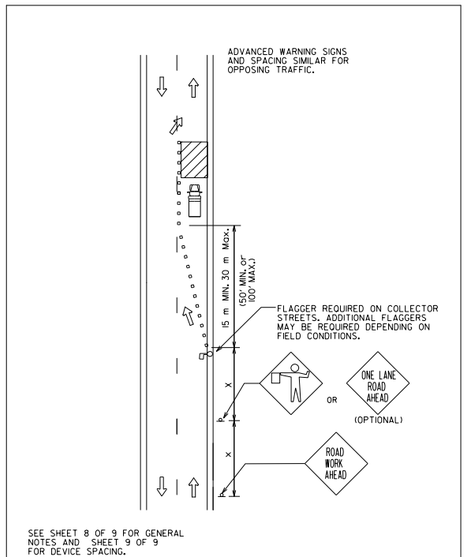

SEE SHEET 8 OF 9 FOR GENERAL NOTES AND SHEET 9 OF 9 FOR DEVICE SPACING.

CITY OF AUSTIN DEPARTMENT OF PUBLIC WORKS	COLLECTOR/RESIDENTIAL LANE CLOSURES	
RECORD COPY SIGNED BY KERI JUAREZ 01/04/11 ADOPTED	THE ARCHITECT/ENGINEER ASSUMES RESPONSIBILITY FOR APPROPRIATE USE OF THIS STANDARD.	STANDARD NO. 804S-1 5 OF 9

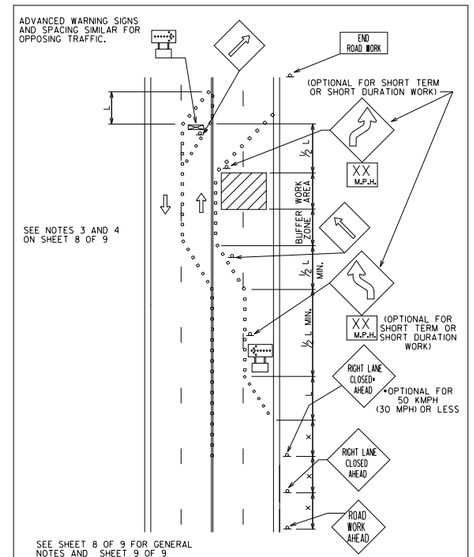

SEE SHEET 8 OF 9 FOR GENERAL NOTES AND SHEET 9 OF 9 FOR DEVICE SPACING.

CITY OF AUSTIN DEPARTMENT OF PUBLIC WORKS	TYPICAL TRAFFIC CONTROL PLAN FOR SHIFTING TRAFFIC	
RECORD COPY SIGNED BY KERI JUAREZ 01/04/11 ADOPTED	THE ARCHITECT/ENGINEER ASSUMES RESPONSIBILITY FOR APPROPRIATE USE OF THIS STANDARD.	STANDARD NO. 804S-1 6 OF 9

NUMBER	DATE	REVISION	APPROVED

STATE OF TEXAS
GREGORY C. CALKINS
111309
LICENSED
PROFESSIONAL ENGINEER
9/28/2020

Binkley & Barfield, Inc
consulting engineers
Texas Registration Number F-257

CEDAR PARK

ANDERSON MILL ROAD

STANDARD DETAILS TRAFFIC CONTROL

DESIGN BY: GCC DRAWN BY: DSH CHECKED BY: BMB APPROVED BY: BDR PROJECT NO: 156402 DATE: 9/28/2020	SCALE: N/A	
	SHEET: 1 OF 7	
	PAGE: 145	

9/28/2020
1:25:00 PM
I:\156402*Anderson*Mill*Road\CADD\SHEETS\TCSD1*AM*01.dgn

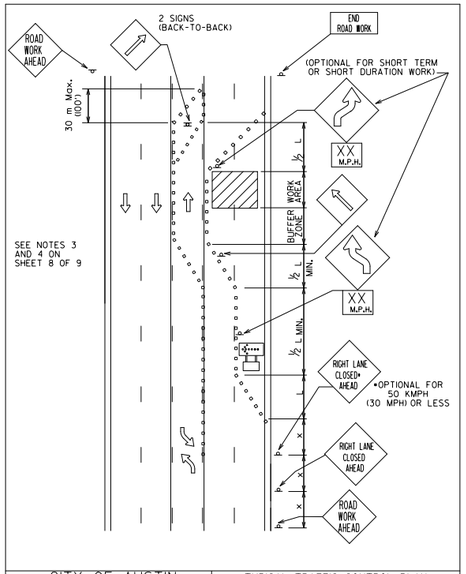

CITY OF AUSTIN DEPARTMENT OF PUBLIC WORKS	TYPICAL TRAFFIC CONTROL PLAN FOR SHIFTING TRAFFIC	
RECORD COPY SIGNED BY KERI JUAREZ 01/04/11 ADOPTED	THE ARCHITECT/ENGINEER ASSUMES RESPONSIBILITY FOR APPROPRIATE USE OF THIS STANDARD.	STANDARD NO. 804S-1 7 OF 9

1. ALL SETUPS SHALL BE IN ACCORDANCE WITH THE CURRENT ADDITION OF THE TEXAS MANUAL ON UNIFORM TRAFFIC CONTROL DEVICES AND THE CITY OF AUSTIN TRANSPORTATION CRITERIA MANUAL.
2. TO DETERMINE APPROPRIATE DEVICES AND SIGN SIZES TO BE USED, REFER TO STANDARD 804S-5, SHEETS 5, 6 AND 7 OF 11.
3. FOR INTERMEDIATE-TERM SITUATIONS, WHEN IT IS NOT FEASIBLE TO REMOVE AND RESTORE PAVEMENT MARKINGS, THE CHANNELIZATION MUST BE MADE DOMINANT BY USING A VERY CLOSE DEVICE SPACING. THIS IS ESPECIALLY IMPORTANT IN LOCATIONS OF CONFLICTING INFORMATION, SUCH AS WHERE TRAFFIC IS DIRECTED OVER A DOUBLE YELLOW CENTERLINE. IN SUCH LOCATIONS, A MAXIMUM CHANNELIZING DEVICE SPACING OF 3 m (10') IS REQUIRED.
4. FOR LONG TERM STATIONARY WORK, ALL CONFLICTING PAVEMENT MARKINGS MUST BE REMOVED AND CENTERLINE STRIPING PROVIDED WHERE TWO WAY TRAFFIC IS IN ADJACENT LANES.
5. FOR TEMPORARY PAVEMENT MARKING REQUIREMENTS SEE STANDARD 804S-3.
6. FOR ONE-WAY AND MULTI-LANE ROADWAYS THE "LANE BLOCKED" SIGN MAY BE USED IN LIEU OF THE "LANE CLOSED AHEAD" SIGN. THE NUMBER OF DIGITS ON THE SIGN SHALL NOT BE GREATER THAN THE NUMBER OF LANES PRESENT ON THE ROADWAY. THE "X" SHALL BE PLACED UNDER THE NUMBER OF LANE(S) BLOCKED.
7. FOR FLAGGING OPERATION REQUIREMENTS SEE STANDARD 804S-2.
8. CONTRACTOR SHALL PROVIDE SIDEWALK CLOSURES, CROSSWALK CLOSURES OR WALKWAY BYPASS WHEREVER PEDESTRIAN MOVEMENTS ARE AFFECTED BY CONSTRUCTION ACTIVITIES. ALL SIDEWALKS AND CROSSWALKS SHALL BE ACCESSIBLE WHEN CONTRACTOR IS NOT WORKING UNLESS APPROVED BY THE TRANSPORTATION DIVISION.
9. FOR EXCAVATION PROTECTION AND SAFETY FENCE REQUIREMENTS SEE STANDARD 804S-4.
10. THE USE OF ARROW DISPLAYS ARE REQUIRED ON ALL LANE CLOSURES. THE CONTRACTOR SHALL PROVIDE ONE (1) STAND-BY UNIT IN GOOD WORKING CONDITION AT THE JOB SITE, READY FOR USE IF THE OPERATION REQUIRES 24-HOUR A DAY LANE CLOSURE SET-UPS.

CITY OF AUSTIN DEPARTMENT OF PUBLIC WORKS	GENERAL NOTES	
RECORD COPY SIGNED BY KERI JUAREZ 01/04/11 ADOPTED	THE ARCHITECT/ENGINEER ASSUMES RESPONSIBILITY FOR APPROPRIATE USE OF THIS STANDARD.	STANDARD NO. 804S-1 8 OF 9

Typical Transition Lengths and Suggested Maximum Spacing of Devices

Speed KMPH	Posted Speed MPH	Formula	Minimum Desirable Taper Lengths (L) Meters (Feet) 3.0(10) Offset Meters (feet)	3.3(11) Offset Meters (feet)	3.6(12) Offset Meters (feet)	Suggested Max. Device Spacing On a taper Meters (feet)	On a tangent Meters (feet)	Suggested Sign Spacing Meters (Feet) "X" Dimension
50	30	L=WS²/60	45 (150)	50 (165)	55 (180)	9 (30)	15-20 (60-75)	40 (120)
55	35		65 (205)	70 (225)	75 (245)	10 (35)	25-25 (70-90)	50 (160)
65	40		80 (265)	90 (295)	100 (320)	12 (40)	25-30 (80-100)	75 (240)
70	45	L=WS	135 (450)	150 (495)	165 (540)	13 (45)	25-30 (90-110)	100 (320)
80	50		150 (500)	165 (550)	180 (600)	15 (50)	30-35 (100-125)	120 (400)
90	55		165 (550)	185 (605)	200 (660)	16 (55)	35-40 (110-140)	150 (500)
95	60		180 (600)	200 (660)	220 (720)	18 (60)	40-45 (120-150)	180 (600)
105	65		195 (650)	215 (715)	235 (780)	19 (65)	40-50 (130-165)	210 (700)
115	70		215 (700)	235 (770)	255 (840)	21 (70)	45-55 (140-175)	240 (800)

LEGEND
- Channelizing devices
- Trailer mounted flashing arrow board
- Flagger

CITY OF AUSTIN DEPARTMENT OF PUBLIC WORKS	DEVICE SPACING	
RECORD COPY SIGNED BY KERI JUAREZ 01/04/11 ADOPTED	THE ARCHITECT/ENGINEER ASSUMES RESPONSIBILITY FOR APPROPRIATE USE OF THIS STANDARD.	STANDARD NO. 804S-1 9 OF 9

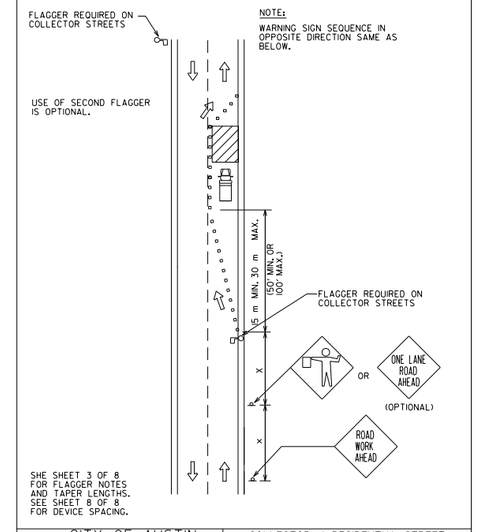

CITY OF AUSTIN DEPARTMENT OF PUBLIC WORKS	COLLECTOR / RESIDENTIAL STREET FLAGGING OPERATIONS	
RECORD COPY SIGNED BY BILL GARDNER 03/13/06 ADOPTED	THE ARCHITECT/ENGINEER ASSUMES RESPONSIBILITY FOR APPROPRIATE USE OF THIS STANDARD.	STANDARD NO. 804S-2 1 OF 8

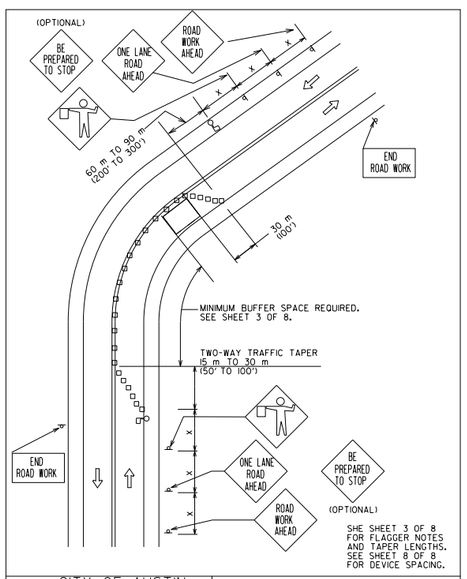

CITY OF AUSTIN DEPARTMENT OF PUBLIC WORKS	FLAGGER SETUP FOR 2 LANE ROADWAY	
RECORD COPY SIGNED BY BILL GARDNER 03/13/06 ADOPTED	THE ARCHITECT/ENGINEER ASSUMES RESPONSIBILITY FOR APPROPRIATE USE OF THIS STANDARD.	STANDARD NO. 804S-2 2 OF 8

1. FOR DAYTIME WORK, THE FLAGGER SHALL WEAR AN APPROVED BRIGHTLY COLORED VEST. FOR NIGHTTIME WORK, THE VEST SHALL BE RETROFLECTIVE. THE RETRO-REFLECTIVE MATERIAL SHALL BE ORANGE, YELLOW, WHITE, SILVER, STRONG YELLOW-GREEN OR A FLOURESCENT VERSION OF THESE COLORS AND SHALL BE VISIBLE AT A MINIMUM DISTANCE OF 305 m (1,000').
2. FOR LOW-VOLUME APPLICATIONS, A SINGLE FLAGGER MAY BE ADEQUATE. WHERE ONE FLAGGER CAN BE USED, SUCH AS FOR SHORT WORK AREAS ON STRAIGHT ROADWAYS, THE FLAGGER MUST BE VISIBLE TO APPROACHING TRAFFIC FROM BOTH DIRECTIONS.
3. FLAGGERS SHALL USE ONLY STOP/SLOW PADDLE TO DIRECT TRAFFIC UNLESS WORKING IN A SIGNALIZED INTERSECTION WHERE DRIVERS MAY BE CONFUSED BY THE SIGN PADDLE. HAND SIGNAL MAY BE USED IN THESE SITUATIONS.
4. FLAGGERS SHALL ENSURE THAT ALL REQUIRED SIGNING IS IN PLACE PRIOR TO BEGINNING FLAGGING OPERATIONS.
5. FLAGGERS SHALL NOT PERFORM WORK THAT IS NOT RELATED TO FLAGGING WHILE ON DUTY.
6. FLAGGERS MAY CARRY AIR HORNS OR WHISTLES TO WARN WORKERS OF AN EMERGENCY CONDITION.
7. FLAGGERS SHALL BE REQUIRED TO USE TWO-WAY RADIOS WHEN OUT OF CLEAR VIEW OF EACH OTHER.
8. FLOODLIGHTS SHOULD BE PROVIDED TO MARK FLAGGER STATIONS AT NIGHT AS NEEDED.

TAPER LENGTHS

SPEED (kmph)	SPEED* (mph)	LENGTH (meters)	LENGTH (feet)
30	20	11	35
40	25	17	55
50	30	26	85
55	35	36	120
65	40	51	170
70	45	66	220
80	50	84	280
90	55	101	335
95	60	125	415
105	65	146	485

*POSTED SPEED

CITY OF AUSTIN DEPARTMENT OF PUBLIC WORKS	FLAGGER SETUP FOR 2 LANE ROADWAY	
RECORD COPY SIGNED BY BILL GARDNER 03/13/06 ADOPTED	THE ARCHITECT/ENGINEER ASSUMES RESPONSIBILITY FOR APPROPRIATE USE OF THIS STANDARD.	STANDARD NO. 804S-2 3 OF 8

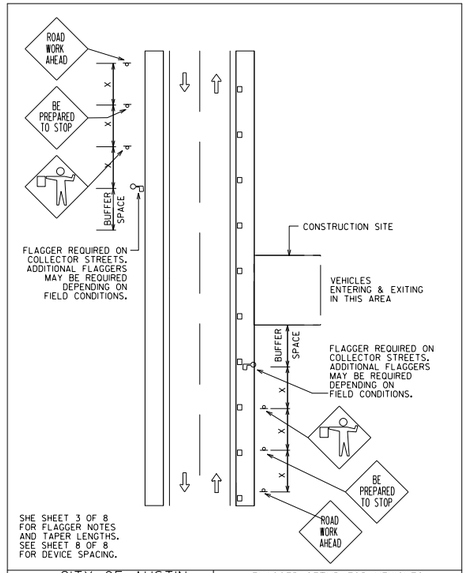

CITY OF AUSTIN DEPARTMENT OF PUBLIC WORKS	FLAGGER SETUP FOR VEHICLES ENTERING AND EXITING WORK SITE	
RECORD COPY SIGNED BY BILL GARDNER 03/13/06 ADOPTED	THE ARCHITECT/ENGINEER ASSUMES RESPONSIBILITY FOR APPROPRIATE USE OF THIS STANDARD.	STANDARD NO. 804S-2 4 OF 8

NUMBER	DATE	REVISION	APPROVED

STATE OF TEXAS
GREGORY C. CALKINS
111309
LICENSED
PROFESSIONAL ENGINEER
9/28/2020

Binkley & Barfield, Inc
consulting engineers
Texas Registration Number F-257

CEDAR PARK

ANDERSON MILL ROAD

STANDARD DETAILS TRAFFIC CONTROL

DESIGN BY:	GCC	SCALE: N/A	
DRAWN BY:	DSH		
CHECKED BY:	BMB		
APPROVED BY:	BDR	SHEET: 2 OF 7	
PROJECT NO:	156402		
DATE:	9/28/2020	PAGE: 146	

9/28/2020
1:25:03 PM
I:\156402*Anderson*Mill*Road\CADD\SHEETS\TCSD1*AM*02.dgn

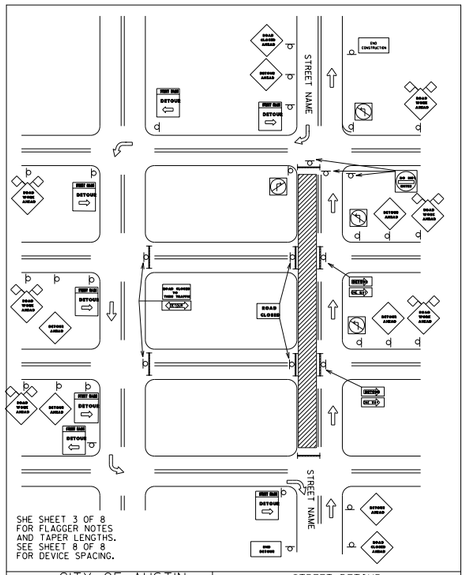

CITY OF AUSTIN DEPARTMENT OF PUBLIC WORKS		STREET DETOUR SINGLE DIRECTION	
RECORD COPY SIGNED BY BILL GARDNER	03/13/06 ADOPTED	THE ARCHITECT/ENGINEER ASSUMES RESPONSIBILITY FOR APPROPRIATE USE OF THIS STANDARD.	STANDARD NO. 804S-2 5 OF 8

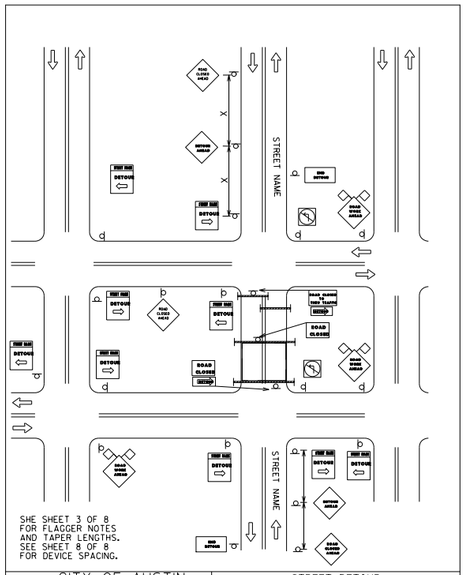

CITY OF AUSTIN DEPARTMENT OF PUBLIC WORKS		STREET DETOUR BOTH DIRECTIONS	
RECORD COPY SIGNED BY BILL GARDNER	03/13/06 ADOPTED	THE ARCHITECT/ENGINEER ASSUMES RESPONSIBILITY FOR APPROPRIATE USE OF THIS STANDARD.	STANDARD NO. 804S-2 6 OF 8

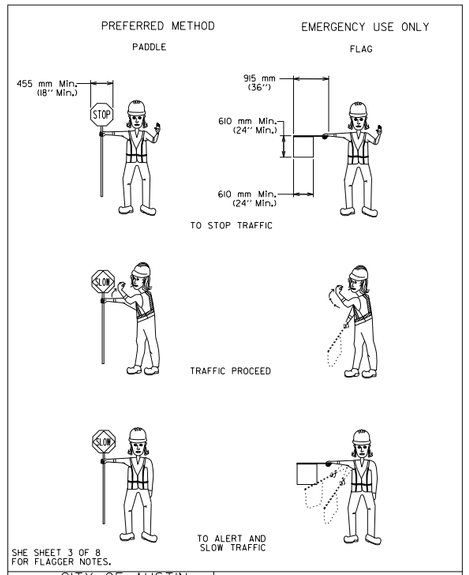

CITY OF AUSTIN DEPARTMENT OF PUBLIC WORKS		USE OF HAND SIGNALING DEVICES	
RECORD COPY SIGNED BY BILL GARDNER	03/13/06 ADOPTED	THE ARCHITECT/ENGINEER ASSUMES RESPONSIBILITY FOR APPROPRIATE USE OF THIS STANDARD.	STANDARD NO. 804S-2 7 OF 8

Typical Transition Lengths and Suggested Maximum Spacing of Devices

Speed KMPH	Posted Speed MPH	Formula	Minimum Desirable Taper Lengths (L) Meters (Feet): 3.0(10) Offset Meters (feet)	3.3(11) Offset Meters (feet)	3.6(12) Offset Meters (feet)	Suggested Max. Device Spacing: On a taper Meters (feet)	On a tangent Meters (feet)	Suggested Sign Spacing Meters (Feet): "X" Dimension
50	30	$L=\frac{WS^2}{60}$	45 (150)	50 (165)	55 (180)	9 (30)	15-20 (60-75)	40 (120)
55	35		65 (205)	70 (225)	75 (245)	10 (35)	25-25 (70-90)	50 (160)
65	40		80 (265)	90 (295)	100 (320)	12 (40)	25-30 (80-100)	75 (240)
70	45	L=WS	135 (450)	150 (495)	165 (540)	13 (45)	25-30 (90-110)	100 (320)
80	50		150 (500)	165 (550)	180 (600)	15 (50)	30-35 (100-125)	120 (400)
90	55		165 (550)	185 (605)	200 (660)	16 (55)	35-40 (110-140)	150 (500)
95	60		180 (600)	200 (660)	220 (720)	18 (60)	40-45 (120-150)	180 (600)
105	65		195 (650)	215 (715)	235 (780)	19 (65)	40-50 (130-165)	210 (700)
115	70		215 (700)	235 (770)	255 (840)	21 (70)	45-55 (140-175)	240 (800)

LEGEND
- Channelizing devices
- Trailer mounted flashing arrow board
- Flagger

TRAFFIC DETOUR NOTES:

1. "STREET CLOSED" AND "STREET CLOSED TO THRU TRAFFIC" MAY BE USED IN PLACE OF "ROAD CLOSED" AND "ROAD CLOSED TO THRU TRAFFIC".
2. THE USE OF A STREET SIGN NAME NAME MOUNTED WITH THE M4-9 DETOUR SIGN** IS REQUIRED. THE STREET NAME PLATE SHOULD BE PLACED ABOVE THE DETOUR SIGN. THE PLATE MAY HAVE EITHER A WHITE-ON-GREEN OR A BLACK-ON-ORANGE LEGEND.
3. ADDITIONAL "DO NOT ENTER SIGNS" MAY BE DESIRABLE AT INTERSECTIONS WITH INTERVENING STREETS.
4. A M4-9 DETOUR SIGN** WITH AN ADVANCE TURN ARROW MAY BE USED IN ADVANCE OF A TURN. ON MULTI-LANE STREETS, SUCH SIGNS SHOULD BE USED.
5. M4-9 DETOUR SIGNS** MAY BE LOCATED ON THE FAR SIDE OF INTERSECTIONS.

** TEXAS MANUAL ON UNIFORM TRAFFIC CONTROL DEVICES

CITY OF AUSTIN DEPARTMENT OF PUBLIC WORKS		TYPICAL LENGTHS & SPACING OF DEVICES, LEGEND and GENERAL NOTES	
RECORD COPY SIGNED BY BILL GARDNER	03/13/06 ADOPTED	THE ARCHITECT/ENGINEER ASSUMES RESPONSIBILITY FOR APPROPRIATE USE OF THIS STANDARD.	STANDARD NO. 804S-2 8 OF 8

STANDARD WORK ZONE PAVEMENT MARKINGS DETAIL

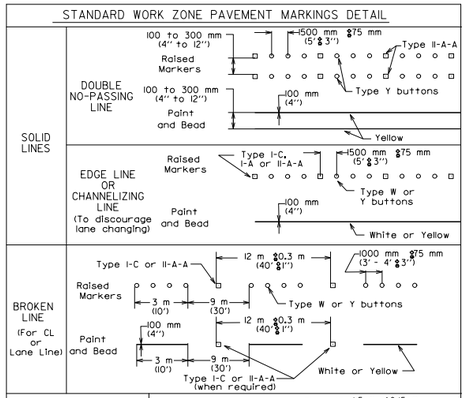

NOTE: IF RAISED PAVEMENT MARKERS ARE USED TO SUPPLEMENT REMOVABLE MARKINGS, THE MARKERS SHALL BE APPLIED TO THE TOP OF THE TAPE AT THE APPROXIMATE MID-LENGTH OF TAPE BROKEN LINES AND AT APPROXIMATE 6 m (20') SPACING FOR SOLID LINES. THIS ALLOWS AN EASIER REMOVAL OF RAISED MARKERS AND TAPE.

CITY OF AUSTIN DEPARTMENT OF PUBLIC WORKS		TEMPORARY TRAFFIC CONTROL PAVEMENT MARKINGS	
RECORD COPY SIGNED BY BILL GARDNER	03/13/06 ADOPTED	THE ARCHITECT/ENGINEER ASSUMES RESPONSIBILITY FOR APPROPRIATE USE OF THIS STANDARD.	STANDARD NO. 804S-3 1 OF 5

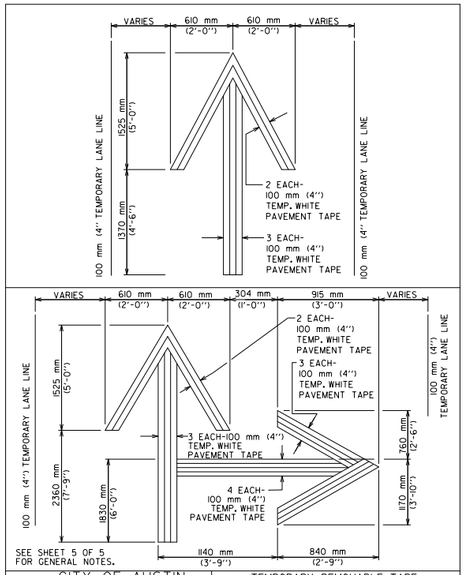

CITY OF AUSTIN DEPARTMENT OF PUBLIC WORKS		TEMPORARY REMOVABLE TAPE, ARROWS AND LEGENDS	
RECORD COPY SIGNED BY BILL GARDNER	03/13/06 ADOPTED	THE ARCHITECT/ENGINEER ASSUMES RESPONSIBILITY FOR APPROPRIATE USE OF THIS STANDARD.	STANDARD NO. 804S-3 2 OF 5

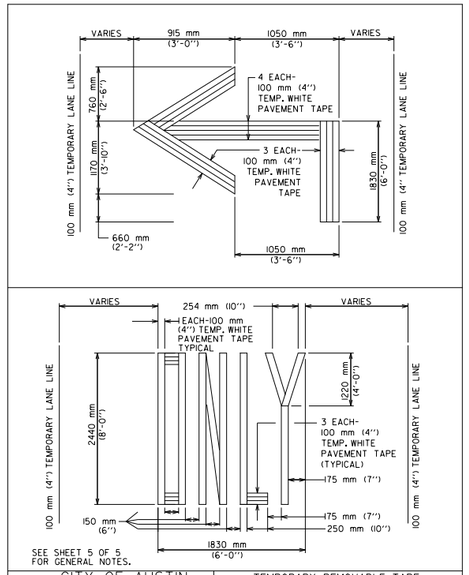

CITY OF AUSTIN DEPARTMENT OF PUBLIC WORKS		TEMPORARY REMOVABLE TAPE, ARROWS AND LEGENDS	
RECORD COPY SIGNED BY BILL GARDNER	03/13/06 ADOPTED	THE ARCHITECT/ENGINEER ASSUMES RESPONSIBILITY FOR APPROPRIATE USE OF THIS STANDARD.	STANDARD NO. 804S-3 3 OF 5

NUMBER	DATE	REVISION	APPROVED

STATE OF TEXAS
GREGORY C. CALKINS
111309
LICENSED
PROFESSIONAL ENGINEER
9/28/2020

Binkley & Barfield, Inc
consulting engineers
Texas Registration Number F-257

CEDAR PARK

ANDERSON MILL ROAD

STANDARD DETAILS TRAFFIC CONTROL

DESIGN BY:	GCC	SCALE: N/A	
DRAWN BY:	DSH		
CHECKED BY:	BMB		
APPROVED BY:	BDR	SHEET: 3 OF 7	
PROJECT NO:	156402		
DATE:	9/28/2020	PAGE: 147	

9/28/2020
1:25:06 PM
I:\156402*Anderson*Mill*Road\CADD\SHEETS\TCSD1*AM*03.dgn

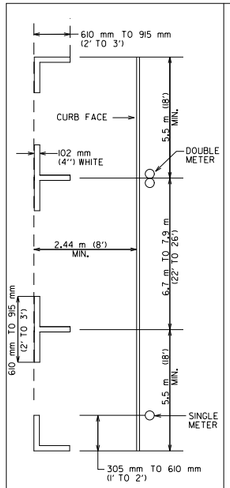

PARKING STALLS

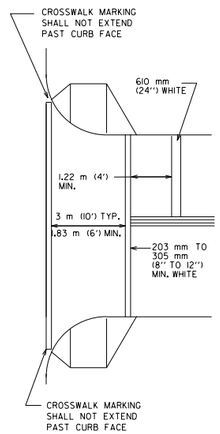

CROSSWALK AND STOPBARS

SEE SHEET 5 OF 5
FOR GENERAL NOTES.

CITY OF AUSTIN DEPARTMENT OF PUBLIC WORKS		PARKING STALLS, CROSSWALK AND STOP BARS	
RECORD COPY SIGNED BY BILL GARDNER	03/13/06 ADOPTED	THE ARCHITECT/ENGINEER ASSUMES RESPONSIBILITY FOR APPROPRIATE USE OF THIS STANDARD.	STANDARD NO. 804S-3 4 OF 5

1. ALL PAVEMENT MARKINGS USED SHALL CONFORM TO THE CURRENT EDITION OF THE TEXAS MANUAL ON UNIFORM TRAFFIC CONTROL DEVICES (TMUTCD) AND THE CITY OF AUSTIN TRANSPORTATION CRITERIA MANUAL.
2. THE CONTRACTOR SHALL BE RESPONSIBLE FOR MAINTAINING ALL TEMPORARY AND EXISTING PAVEMENT MARKINGS ON ALL ROADWAYS WITHIN THE CONSTRUCTION LIMITS AND ON ANY ROADWAY OUTSIDE THE CONSTRUCTION LIMITS THAT REQUIRES THE REROUTING OF TRAFFIC FOR HIS WORK.
3. ALL ROADWAYS TO BE OPENED TO TRAFFIC SHALL HAVE TEMPORARY OR STANDARD PAVEMENT MARKINGS INSTALLED AS SHOWN IN THE DRAWINGS, AT THE END OF EACH DAY'S OPERATION.
4. MARKINGS SHALL PROVIDE A VISIBLE REFERENCE FOR A MINIMUM DISTANCE OF 91.5 m (300') DURING NORMAL DAYLIGHT HOURS AND 49 m (160') WHEN ILLUMINATED BY AUTOMOBILE LOW-BEAM HEADLIGHTS AT NIGHT, UNLESS SIGHT DISTANCE IS RESTRICTED BY ROADWAY GEOMETRICS.
5. ALL TEMPORARY REMOVABLE PAVEMENT MARKINGS SHALL BE SUPPLEMENTED WITH RAISED PAVEMENT MARKERS.
6. TEMPORARY REMOVABLE PAVEMENT MARKING TAPE IS THE PREFERRED PAVEMENT MARKING; HOWEVER, THE CONTRACTOR MAY, WITH APPROVAL OF THE ENGINEER OR DESIGNATED REPRESENTATIVE, USE RAISED PAVEMENT MARKINGS, PAINT AND BEADS OR THERMOPLASTIC IF THE ROADWAY IS TO BE COMPLETELY RESURFACED.
7. PAVEMENT MARKINGS THAT ARE NO LONGER APPLICABLE AND WHICH MAY CREATE CONFUSION OR DIRECT A MOTORIST TOWARD OR INTO THE CLOSED PORTION OF THE ROADWAY, SHALL BE REMOVED OR OBLITERATED BEFORE THE ROADWAY IS OPENED TO TRAFFIC. THE ABOVE DOES NOT APPLY TO SHORT-DURATION, SHORT TERM STATIONARY OR INTERMEDIATE TERM STATIONARY WORK.
8. REMOVAL OR OBLITERATION OF PAVEMENT MARKINGS INCLUDES CENTERLINES, CHANNELIZING LINES, LANE LINES, EDGE LINES, WORDS, ARROWS, SYMBOLS AND RAISED PAVEMENT MARKINGS.
9. PAVEMENT MARKINGS SHALL BE REMOVED OR OBLITERATED TO THE FULLEST EXTENT POSSIBLE, SO AS NOT TO LEAVE A DISCERNIBLE MARK. GRINDING OF PAVEMENT MARKINGS WILL ONLY BE ALLOWED ON PAVEMENT THAT IS TO BE COMPLETELY REPLACED.
10. TEMPORARY FLEXIBLE-REFLECTIVE TABS MAY BE USED FOR TEMPORARY PAVEMENT MARKINGS ON NEW PAVEMENT, PROVIDED THEY ARE PLACED ON 1.5 m (5') CENTERS.
11. THE CONTRACTOR SHALL PLACE TEMPORARY FLEXIBLE-REFLECTIVE TABS IMMEDIATELY AFTER THE FINAL HMAC OVERLAY AS EACH LANE IS COMPLETED AND READY FOR TRAFFIC. NO DIRECT PAYMENT WILL BE MADE FOR THIS OPERATION, BUT WILL BE CONSIDERED SUBSIDIARY TO THE OTHER BID ITEMS. FINAL STRIPING SHOULD BE COMPLETED WITHIN FOURTEEN (14) DAYS OF THE FINAL PAVING.

CITY OF AUSTIN DEPARTMENT OF PUBLIC WORKS		GENERAL NOTES	
RECORD COPY SIGNED BY BILL GARDNER	03/13/06 ADOPTED	THE ARCHITECT/ENGINEER ASSUMES RESPONSIBILITY FOR APPROPRIATE USE OF THIS STANDARD.	STANDARD NO. 804S-3 5 OF 5

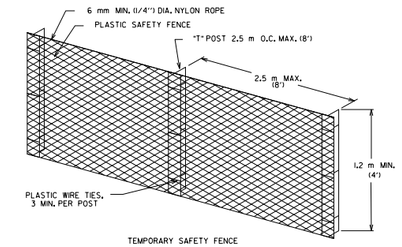

TEMPORARY SAFETY FENCE

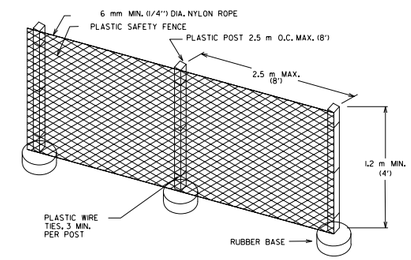

PORTABLE SAFETY FENCE

CITY OF AUSTIN DEPARTMENT OF PUBLIC WORKS		SAFETY FENCE	
RECORD COPY SIGNED BY SAM ANGOORI	04/03/09 ADOPTED	THE ARCHITECT/ENGINEER ASSUMES RESPONSIBILITY FOR APPROPRIATE USE OF THIS STANDARD.	STANDARD NO. 804S-4 1 OF 9

1. SAFETY FENCE SHALL BE USED TO PROTECT ALL EXCAVATIONS IN THE RIGHT-OF-WAY.
2. SAFETY FENCES SHALL BE USED TO SEPARATE CONSTRUCTION ACTIVITIES FROM PEDESTRIAN.
3. ALL SAFETY FENCING SHALL BE PLASTIC, 1.200 mm (48") MINIMUM HEIGHT AND ORANGE IN COLOR.
4. SAFETY FENCE USED WITHIN THE ROADWAY SHALL BE REFLECTORIZED WITH A MINIMUM OF TWO (2) STRIPS OF RETROREFLECTIVE MATERIAL, A MINIMUM OF 25 mm (1") WIDE, THE LENGTH OF THE FENCE OR DELINEATED BY CHANNELIZING DEVICES.
5. SAFETY FENCE USED TO SEPARATE SIDEWALKS FROM CONSTRUCTION ACTIVITIES SHALL HAVE MINIMUM ENCROACHMENT TO THE SIDEWALK.
6. AS A MINIMUM, SAFETY FENCING IS REQUIRED IN AREAS ADJACENT TO EXCAVATIONS GREATER THAN OR EQUAL TO 150 mm (6").
7. SAFETY FENCING SHALL BE PAID FOR UNDER ITEM 803S, "BARRICADES, SIGNS AND TRAFFIC HANDLING", PAY ITEM NO. 803S-SF.
8. PORTABLE SAFETY FENCE MOUNTS SHALL BE APPROVED BY THE TRANSPORTATION DIVISION PRIOR TO CONSTRUCTION.

CITY OF AUSTIN DEPARTMENT OF PUBLIC WORKS		SAFETY FENCE	
RECORD COPY SIGNED BY SAM ANGOORI	04/03/09 ADOPTED	THE ARCHITECT/ENGINEER ASSUMES RESPONSIBILITY FOR APPROPRIATE USE OF THIS STANDARD.	STANDARD NO. 804S-4 2 OF 9

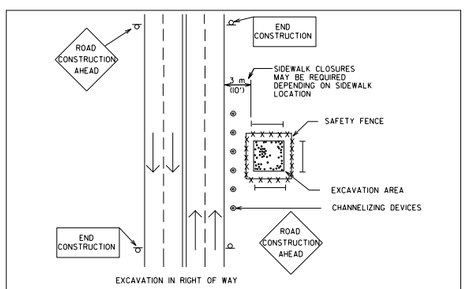

EXCAVATION IN RIGHT OF WAY

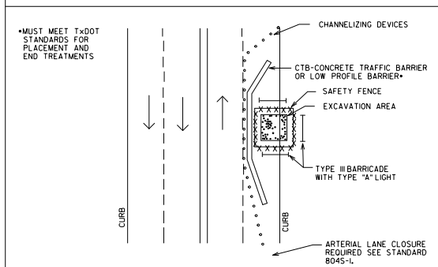

EXCAVATION IN ROADWAY

CITY OF AUSTIN DEPARTMENT OF PUBLIC WORKS		LARGE EXCAVATION	
RECORD COPY SIGNED BY SAM ANGOORI	04/03/09 ADOPTED	THE ARCHITECT/ENGINEER ASSUMES RESPONSIBILITY FOR APPROPRIATE USE OF THIS STANDARD.	STANDARD NO. 804S-4 3 OF 9

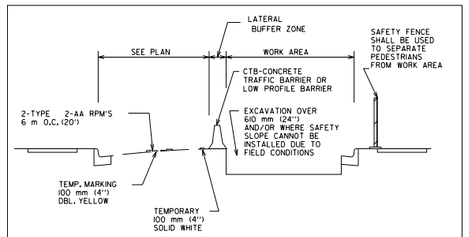

POSITIVE BARRIERS
TYPICAL CROSS SECTION

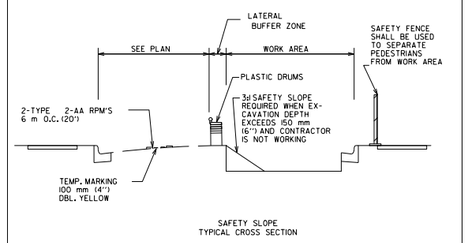

SAFETY SLOPE
TYPICAL CROSS SECTION

CITY OF AUSTIN DEPARTMENT OF PUBLIC WORKS		WORK AREA PROTECTION	
RECORD COPY SIGNED BY SAM ANGOORI	04/03/09 ADOPTED	THE ARCHITECT/ENGINEER ASSUMES RESPONSIBILITY FOR APPROPRIATE USE OF THIS STANDARD.	STANDARD NO. 804S-4 4 OF 9

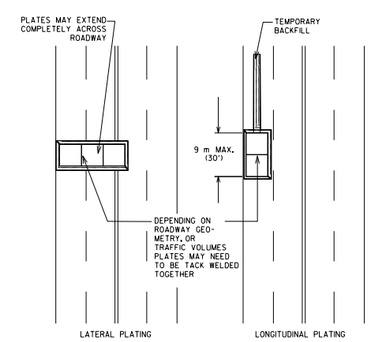

CITY OF AUSTIN DEPARTMENT OF PUBLIC WORKS		STEEL PLATING	
RECORD COPY SIGNED BY SAM ANGOORI	04/03/09 ADOPTED	THE ARCHITECT/ENGINEER ASSUMES RESPONSIBILITY FOR APPROPRIATE USE OF THIS STANDARD.	STANDARD NO. 804S-4 5 OF 9

NUMBER	DATE	REVISION	APPROVED

STATE OF TEXAS
GREGORY C. CALKINS
111309
LICENSED
PROFESSIONAL ENGINEER
9/28/2020

Binkley & Barfield, Inc
consulting engineers
Texas Registration Number F-257

CEDAR PARK

ANDERSON MILL ROAD

STANDARD DETAILS TRAFFIC CONTROL

DESIGN BY:	GCC	SCALE: N/A	
DRAWN BY:	DSH		
CHECKED BY:	BMB		
APPROVED BY:	BDR	SHEET: 4 OF 7	
PROJECT NO:	156402		
DATE:	9/28/2020	PAGE: 148	

9/28/2020
1:25:09 PM
I:\156402*Anderson*Mill*Road\CADD\SHEETS\TCSD1*AM*04.dgn

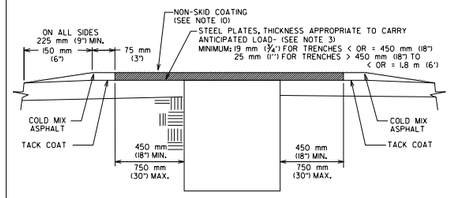

TYPICAL CROSS SECTION

CASE I- LOW TRAFFIC VOLUME/LIMITED IN-SERVICE TIME

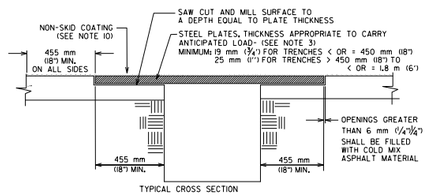

TYPICAL CROSS SECTION

CASE II- EXTENDED IN-SERVICE PLATING AND/OR HEAVILY-TRAFFICKED ROADS/STREETS (HMAC PAVEMENTS ONLY)

CITY OF AUSTIN DEPARTMENT OF PUBLIC WORKS		STEEL PLATING	
RECORD COPY SIGNED BY SAM ANGOORI	04/03/09 ADOPTED	THE ARCHITECT/ENGINEER ASSUMES RESPONSIBILITY FOR APPROPRIATE USE OF THIS STANDARD.	STANDARD NO. 804S-4 6 OF 9

NOTES:

1. WHERE TRAFFIC MUST CROSS TRENCHES, THE CONTRACTOR SHALL PROVIDE SUITABLE BRIDGES.
2. THE USE OF STEEL PLATES SHALL BE APPROVED BY THE RIGHT OF WAY MANAGEMENT DIVISION OF WATERSHED PROTECTION AND DEVLOPMENT DEPARTMENT PRIOR TO INITIATION OF CONSTRUCTION.
3. THE THICKNESS OF PLATES FOR TRENCH WIDTHS EXCEEDING 1.8 m (6') SHALL BE ESTABLISHED IN AN ANALYSIS COMPLETED BY A LICENSED PROFESSIONAL ENGINEER, REGISTERED IN THE STATE OF TEXAS. THE ANALYSIS SHALL BE BASED ON HS-20 TRAFFIC LOADING WITH A MAXIMUM PLATE DEFLECTION OF 50 mm (1"/2") WHEN EXPERIENCING SAID LOADING. FOR SITUATIONS WHERE MULTIPLE LAYERS OF PLATES (OR STACKED PLATES) ARE TO BE EMPLOYED, THE SEAMS (IE. THE INTER-FACE BETWEEN PLACED SIDE-BY-SIDE) OF THE UPPER LAYER SHALL BE PLACED PERPENDICULAR TO THE SEAMS OF THE UNDERLYING PLATES.
4. WHEN APPROVED, THE TYPE OF PLATE INSTALLATION SHALL BE BASED ON THE ANTICIPATED LENGTH OF TIME THE PLATE WILL BE IN SERVICE:
   CASE I: A CASE I INSTALLATION SHALL APPLY FOR NO LONGER THAN A 2 WEEK PERIOD.
   CASE II: A CASE II INSTALLATION SHALL APPLY FOR NO LONGER THAN 2 WEEK PERIOD.
5. THE TOPSIDE OF THE STEEL PLATE SHALL BE FLAT AND FREE OF ANY CLIPS, CHAINS, ATTACHMENTS, WELDMENTS OR SURFACE IRREGULARITIES.
6. PLATES WITH A PERMANENT DISPLACEMENT (I.E. DISPLACEMENT ANYWHERE ON THE SURFACE OF THE PLATE WITH RESPECT TO A PLANE FORMED BY THE OUTSIDE EDGES) THAT EXCEEDS 12 mm (1/2") SHALL NOT BE USED FOR PLATING PURPOSES. PLATES THAT DEVELOP A PERMANENT DISPLACEMENT EXCEEDING 12 mm (1/2") DURING SERVICE SHALL BE REMOVED AND REPLACED.
7. THE PLATES SHALL BE PROVIDED WITH APPROPRIATE NUMBER OF KEYHOLE SLOTS OR CIRCULAR HOLES FOR HANDLING, LIFTING, INSTALLATION AND REMOVAL PURPOSES.
8. THE CONTRACTOR SHOULD AVOID USING A LONG SERIES OF PLATES THAT RUN PARALLEL TO VEHICULAR TRAFFIC WHEELS PATHS.
9. ADDITIONAL METHODS OF SECURING PLATES MAY BE REQUIRED DEPENDING ON FIELD CONDITIONS.
10. FOR PLATES 1.8 M (6') OR GREATER IN DIRECTION OF TRAFFIC, A NON-SKID COATING SHOULD BE APPLIED TO THE ENTIRE SURFACE AREA OF ALL PLATES, AS WELL AS ADJACENT AREAS. THE NON-SKID COATING SHALL BE TCA (TEXTURED COATING OF AMERICA, INC.) STRATA-GRIP DECK COATING SYSTEM; SLIPFIX, INC. SPS (SLIP PROTECTION SURFACE) OR AN EQUIVALENT PRODUCT APPROVED BY THE ENGINEER OR DESIGNATED REPRESENTATIVE.

CITY OF AUSTIN DEPARTMENT OF PUBLIC WORKS		STEEL PLATING	
RECORD COPY SIGNED BY SAM ANGOORI	04/03/09 ADOPTED	THE ARCHITECT/ENGINEER ASSUMES RESPONSIBILITY FOR APPROPRIATE USE OF THIS STANDARD.	STANDARD NO. 804S-4 7 OF 9

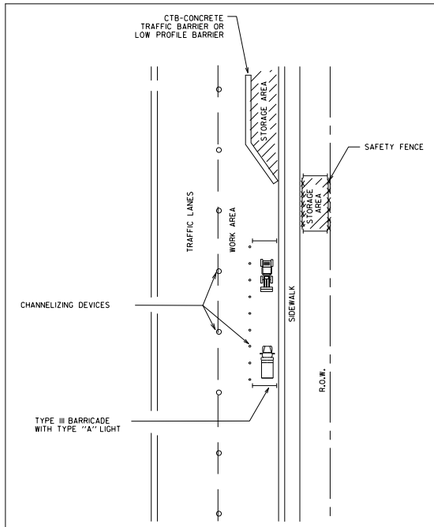

CITY OF AUSTIN DEPARTMENT OF PUBLIC WORKS		MATERIAL AND EQUIPMENT STORAGE	
RECORD COPY SIGNED BY SAM ANGOORI	04/03/09 ADOPTED	THE ARCHITECT/ENGINEER ASSUMES RESPONSIBILITY FOR APPROPRIATE USE OF THIS STANDARD.	STANDARD NO. 804S-4 8 OF 9

1. STORAGE OF EQUIPMENT AND MATERIALS SHALL BE RESTRICTED TO LOCATIONS WHERE DRIVER SIGHT DISTANCES TO TRAFFIC, PEDESTRIANS, BUSINESSES AND SIDE STREET INTERSECTIONS ARE NOT OBSTRUCTED OR WHERE AN UNSIGHTLY APPEARANCE, AS DETERMINED BY THE ENGINEER, WILL NOT EXIST.
2. EQUIPMENT MUST BE PARKED AS FAR AWAY FROM THE TRAVELWAYS AS PRACTICAL.
3. TOTAL AREA USED FOR EQUIPMENT STORAGE SHALL BE KEPT TO A MINIMUM.
4. ALL MATERIALS STORED IN THE RIGHT-OF-WAY MUST BE MAINTAINED IN A NEAT AND ORGANIZED MANNER.
5. MATERIALS STORED MAY NOT BE MORE THAN 915 mm (36") IN HEIGHT.
6. ALL MATERIALS STORED MUST BE USED WITHIN THREE (3) DAYS.

CITY OF AUSTIN DEPARTMENT OF PUBLIC WORKS		MATERIAL AND EQUIPMENT STORAGE	
RECORD COPY SIGNED BY SAM ANGOORI	04/03/09 ADOPTED	THE ARCHITECT/ENGINEER ASSUMES RESPONSIBILITY FOR APPROPRIATE USE OF THIS STANDARD.	STANDARD NO. 804S-4 9 OF 9

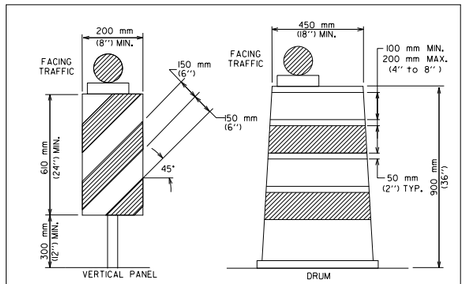

LONG TERM AND INTERMEDIATE TERM STATIONARY WORK

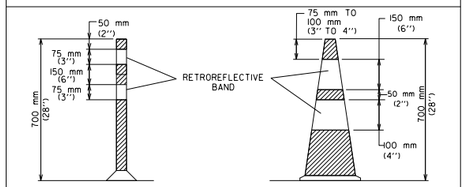

TUBULAR MARKERS CONES

SHORT TERM AND SHORT DURATION WORK

SEE STANDARD 804S-5
SHEET 12 OF 13 AND SHEET 13 OF 13
FOR GENERAL NOTES AND DEVICE SPACING.

CITY OF AUSTIN DEPARTMENT OF PUBLIC WORKS		CHANNELIZING DEVICES	
RECORD COPY SIGNED BY SAM ANGOORI	01/04/10 ADOPTED	THE ARCHITECT/ENGINEER ASSUMES RESPONSIBILITY FOR APPROPRIATE USE OF THIS STANDARD.	STANDARD NO. 804S-5 1 OF 13

CHANNELIZING DEVICES

1. ALL CHANNELIZING DEVICES SHALL HAVE WARNING LIGHTS OR LARGE REFLECTORS WHEN USED AT NIGHT. FLASHING WARNING LIGHTS MAY BE PLACED ON CHANNELIZING DEVICES USED SINGULARLY OR IN GROUPS TO MARK A SPOT CONDITION. WARNING LIGHTS ON CHANNELIZING DEVICES USED IN A SERIES SHALL BE STEADY-BURN. CHANNELIZING DEVICES IN TAPERS AT NIGHT SHALL HAVE TYPE C WARNING LIGHTS.
2. THE RETROREFLECTIVE MATERIAL USED ON CHANNELIZING DEVICES SHALL HAVE A SMOOTH, SEALED OUTER SURFACE.
3. THE NAME AND TELEPHONE NUMBER OF THE AGENCY, CONTRACTOR OR SUPPLIER SHALL BE SHOWN ON THE NON-RETROREFLECTIVE SURFACE OF ALL CHANNELIZING DEVICES. THE LETTERS AND NUMBERS SHALL BE A NON-RETROREFLECTIVE COLOR AND NOT OVER 50 mm (2") IN HEIGHT.
4. PARTICULAR ATTENTION SHOULD BE GIVEN TO ASSURE THAT CHANNELIZING DEVICES ARE MAINTAINED AND KEPT CLEAN, VISIBLE AND PROPERLY POSTITIONED AT ALL TIMES. DEVICES SHALL BE REPLACED THAT ARE DAMAGED AND HAVE LOST A SIGNIFICANT AMOUNT OF THEIR RETROREFLECTIVITY AND EFFECTIVENESS.

CONES

CONES SHALL PREDOMINANTLY BE ORANGE, FLUORESCENT RED-ORANGE, OR FLUORESCENT YELLOW-ORANGE IN COLOR, NOT LESS THAN 70 mm (28") IN HEIGHT, AND SHALL BE MADE OF A MATERIAL THAT CAN BE STRUCK WITHOUT DAMAGING VEHICLES ON IMPACT. FOR NIGHT TIME USE, CONES SHALL BE RETROREFLECTIVE OR EQUIPPED WITH LIGHTING DEVICES FOR MAXIMUM VISIBLITY. RETROREFLECTION OF CONES SHALL BE PROVIDED BY A WHITE BOND 150 mm (6") WIDE, NO MORE THAN 75 TO 100 mm (3 TO 4") FROM THE TOP OF THE CONE, AND AN ADDITIONAL 100 mm (4") WHITE BAND A MINIMUM OF 50 mm (2") BELOW THE 150 mm (6") BAND. TRAFFIC CONES ARE NORMALLY USED FOR SHORT-TERM STATIONARY AND SHORT DURATION WORK. HOWEVER, CONES MAY BE USED FOR INTERMEDIATE-TERM STATIONARY WORK AT NIGHT, IF THE SITE IS CONTINUOUSLY MANNED.

TUBULAR MARKERS

TUBULAR MARKERS SHALL PREDOMINANTLY BE ORANGE IN COLOR, NOT LESS THAN 700 mm (28") IN HEIGHT , A MINIMUM 50 mm (2") WIDE WHEN FACING TRAFFIC AND MADE OF A MATERIAL THAT CAN BE STRUCK WITHOUT DAMAGING VEHICLES. FOR NIGHT TIME USE, TUBULAR MARKERS SHALL BE RETROREFLECTIVE PROVIDED BY TWO (2) 75 mm (3") WIDE WHITE BANDS PLACED A MAXIMUM OF 50 mm (2") FROM THE TOP, WITH A MAXIMUM OF 150 mm (6") BETWEEN BANDS. TUBULAR MARKERS ARE NORMALLY USED FOR SHORT-TERM STATIONARY AND SHORT DURATION WORK. HOWEVER, TUBULAR MARKERS MAY BE USED FOR INTERMEDIATE-TERM STATIONARY WORK AT NIGHT, IF THE SITE IS CONTINUOUSLY MANNED.

VERTICAL PANELS

VERTICAL PANELS SHALL BE 200 TO 300 mm (8 TO 12") WIDE AND AT LEAST 600 mm (24") IN HEIGHT. THEY SHALL HAVE ORANGE AND WHITE STRIPES, AND BE RETROREFLECTIVE. PANEL STRIPE WIDTHS SHALL BE 150 mm (6") EXCEPT WHERE PANEL HEIGHTS ARE LESS THAN 900 mm (36"). WHEN 100 mm (4") STRIPES MAY BE USED. IF USED FOR TWO-WAY TRAFFIC, BACK-TO-BACK PANELS SHALL BE USED.

DRUMS

1. DRUMS USED FOR TRAFFIC WARNING OR CHANNELIZATION SHALL BE CONSTRUCTED OF LIGHT-WEIGHT FLEXIBLE AND DEFORMABLE MATERIALS AND BE A MINIMUM OF 900 mm (36") IN HEIGHT, AND HAVE AT LEAST 450 mm (18") MINIMUM WIDTH, REGARDLESS OF OREINTATION. STEEL DRUMS SHALL NOT BE USED. THE MARKINGS ON DRUMS SHALL BE HORIZONTAL, CIRCUNFERENTIAL, ALTERNATING ORANGE AND WHITE RETROREFLECTIVE STRIPES 100 TO 200 mm (4 TO 8") WIDE. EACH DRUM SHALL HAVE A MINIMUM OF TWO (2) ORANGE AND TWO (2) WHITE STRIPES. ANY NON-RETROREFLECTIVE SPACES BETWEEN THE HORIZONTAL ORANGE AND WHITE STRIPES, SHALL NOT EXCEED 50 mm (2") WIDE. DRUMS SHALL HAVE CLOSED TOPS THAT WILL NOT ALLOW COLLECTION OF ROADWORK OR OTHER DEBRIS.
2. DRUMS SHOULD NOT BE WEIGHTED WITH SAND, WATER OR ANY MATERIAL TO AN EXTENT THAT WOULD MAKE THE HAZARDOUS TO MOTORISTS, PEDESTRIANS OR WORKERS. WHEN THEY ARE USED IN REGIONS SUSCEPTIBLE TO FREEZING, THEY SHOULD HAVE DRAINAGE HOLES IN THE BOTTOM SO WATER WILL NOT ACCUMULATE AND FREEZE,CAUSING A HAZARD IF STRUCK BY A MOTORIST. BALLAST SHALL NOT BE PLACED ON TOP OF THE DRUM.

CITY OF AUSTIN DEPARTMENT OF PUBLIC WORKS		CHANNELIZING DEVICES	
RECORD COPY SIGNED BY SAM ANGOORI	01/04/10 ADOPTED	THE ARCHITECT/ENGINEER ASSUMES RESPONSIBILITY FOR APPROPRIATE USE OF THIS STANDARD.	STANDARD NO. 804S-5 2 OF 13

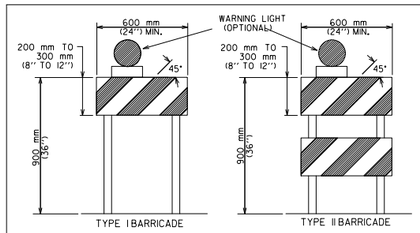

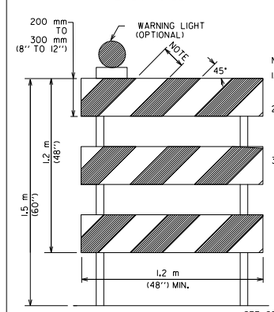

TYPE III BARRICADE

NOTES:

1. NOMINAL LUMBER DIMENSIONS ARE SATISFACTORY FOR BARRICADE RAIL WIDTH DIMENSIONS.
2. RAIL STRIPE WIDTHS SHALL BE 150 mm (6") EXCEPT WHERE RAIL LEGNTHS ARE LESS THAN 900 mm (36"), THEN 100 mm (4") WIDE STRIPES MAY BE USED.
3. THE SIDE OF BARRICADES FACING TRAFFIC SHALL HAVE RETRO-REFLECTIVE RAIL FACES.

SEE STANDARD 804S-5
SHEET 12 OF 13 AND SHEET 13 OF 13
FOR GENERAL NOTES AND DEVICE SPACING.

CITY OF AUSTIN DEPARTMENT OF PUBLIC WORKS		BARRICADES	
RECORD COPY SIGNED BY SAM ANGOORI	01/04/10 ADOPTED	THE ARCHITECT/ENGINEER ASSUMES RESPONSIBILITY FOR APPROPRIATE USE OF THIS STANDARD.	STANDARD NO. 804S-5 3 OF 13

NUMBER	DATE	REVISION	APPROVED

STATE OF TEXAS
GREGORY C. CALKINS
111309
LICENSED
PROFESSIONAL ENGINEER
9/28/2020

Binkley & Barfield, Inc
consulting engineers
Texas Registration Number F-257

CEDAR PARK

ANDERSON MILL ROAD

STANDARD DETAILS TRAFFIC CONTROL

DESIGN BY:	GCC	SCALE: N/A	
DRAWN BY:	DSH		
CHECKED BY:	BMB		
APPROVED BY:	BDR	SHEET: 5 OF 7	
PROJECT NO:	156402		
DATE:	9/28/2020	PAGE: 149	

9/28/2020
1:25:14 PM
I:\156402*Anderson*Mill*Road\CADD\SHEETS\TCSD1*AM*05.dgn

BARRICADES

1. BARRICADES SHALL BE OF THREE TYPES: TYPE I, TYPE II OR TYPE III.
2. STRIPES ON BARRICADE RAILS SHALL BE ALTERNATING ORANGE AND WHITE RETRO-REFLECTIVE STRIPES (SLOPING DOWNWARD AT AN ANGLE OF 45 DEGREES IN THE DIRECTION TRAFFIC IS TO PASS). THE STRIPES SHALL BE 150 mm (6") WIDE, EXCEPT WHERE RAIL LENGTHS ARE LESS THAN 900 mm (36"), WHEN 100 mm (4") WIDE STRIPES MAY BE USED.
3. WHERE A BARRICADE EXTENDS ENTIRELY ACROSS A ROADWAY, THE SURFACE STRIPES SHOULD SLOPE DOWNWARD IN THE DIRECTION TOWARD WHICH TRAFFIC MUST TURN. WHERE BOTH RIGHT AND LEFT TURNS ARE PROVIDED, THE STRIPES MAY SLOPE DOWN-WARD IN BOTH DIRECTIONS FROM THE CENTER OF THE BARRICADE OR BARRICADES. WHERE NO TURNS ARE INTENDED, THE STRIPES SHOULD SLOPE DOWNWARD TOWARD THE CENTER OF THE BARRICADE OR BARRICADES.
4. BARRICADE RAILS SHOULD BE SUPPORTED IN A MANNER THAT WILL ALLOW THEM TO BE SEEN BY THE MOTORIST AND PROVIDE A STABLE SUPPORT NOT EASILY BLOWN OVER BY THE WIND OR TRAFFIC. FOR TYPE I BARRICADES, THE SUPPORT MAY INCLUDE OTHER UNSTRIPED HORIZONTAL PANELS NECESSARY TO PROVIDE STABILITY.
5. BARRICADES ARE LOCATED ADJACENT TO TRAFFIC AND ARE THEREFORE SUBJECT TO IMPACT WITH ERRANT VEHICLES, BECAUSE OF THEIR VULNERABLE POSITION AND THE HAZARD THEY COULD CREATE, THEY SHOULD BE CONSTRUCTED OF LIGHTWEIGHT MATERIALS AND HAVE NO RIGID STAY BRACING FOR A-FRAME DESIGNS. ALL BARRICADE SYSTEMS SHOULD BE CRASHWORTHY.
6. ON HIGH-SPEED EXPRESSWAYS OR IN OTHER SITUATION WHERE BARRICADES MAY BE SUSCEPTIBLE TO OVERTURING IN THE WIND, SANDBAGS SHOULD BE USED FOR BALLASTING. SANDBAGS MAY BE PLACED ON PARTS OF THE FRAME OR STAYS TO PROVIDE THE REQUIRED BALLAST BUT SHALL NOT BE PLACED ON TOP OF ANY STRIPED RAIL. BARRICADES SHALL NOT BE BALLASTED BY HEAVY OBJECTS SUCH AS ROCKS OR CHUNKS OF CONCRETE.

CITY OF AUSTIN DEPARTMENT OF PUBLIC WORKS	BARRICADES	
RECORD COPY SIGNED BY SAM ANGOORI 01/04/10 ADOPTED	THE ARCHITECT/ENGINEER ASSUMES RESPONSIBILITY FOR APPROPRIATE USE OF THIS STANDARD.	STANDARD NO. 804S-5 4 OF 13

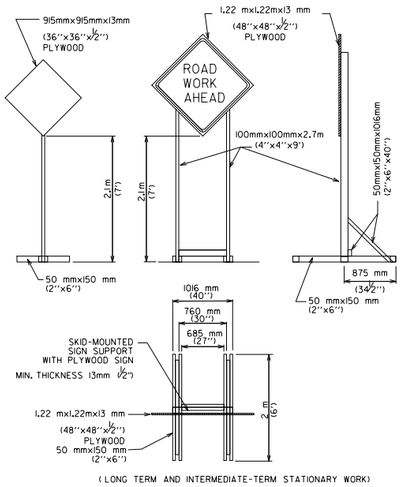

(LONG TERM AND INTERMEDIATE-TERM STATIONARY WORK)

TEMPORARY SIGN SUPPORT

SEE STANDARD 804S-5
SHEET 12 OF 13 AND SHEET 13 OF 13
FOR GENERAL NOTES AND DEVICE SPACING.

CITY OF AUSTIN DEPARTMENT OF PUBLIC WORKS	TRAFFIC CONTROL SIGNS	
RECORD COPY SIGNED BY SAM ANGOORI 01/04/10 ADOPTED	THE ARCHITECT/ENGINEER ASSUMES RESPONSIBILITY FOR APPROPRIATE USE OF THIS STANDARD.	STANDARD NO. 804S-5 5 OF 13

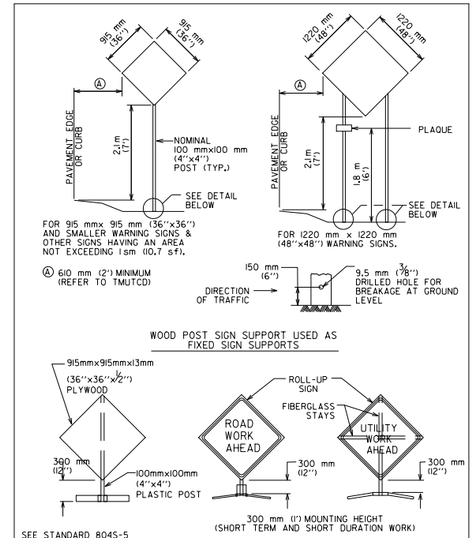

WOOD POST SIGN SUPPORT USED AS FIXED SIGN SUPPORTS

PORTABLE SIGN SUPPORT

SEE STANDARD 804S-5
SHEET 12 OF 13 AND
SHEET 13 OF 13 FOR
GENERAL NOTES AND DEVICE SPACING.

CITY OF AUSTIN DEPARTMENT OF PUBLIC WORKS	TRAFFIC CONTROL SIGNS	
RECORD COPY SIGNED BY SAM ANGOORI 01/04/10 ADOPTED	THE ARCHITECT/ENGINEER ASSUMES RESPONSIBILITY FOR APPROPRIATE USE OF THIS STANDARD.	STANDARD NO. 804S-5 6 OF 13

1. WARNING SIGNS SHALL BE ORANGE, FLUORESCENT RED-ORANGE OR FLUORESCENT YELLOW-ORANGE IN COLOR. THE FLUORESCENT VERSIONS OF ORANGE PROVIDE HIGHER CONSPICUITY THAN STANDARD ORANGE, ESPECIALLY DURING TWILIGHT. ALL SIGNS USED AT NIGHT SHALL BE EITHER RETRORE-FLECTIVE, WITH A MATERIAL THAT HAS A SMOOTH, SEALED OUTER SURFACE, OR ILLUMINATED TO SHOW SIMILAR SHAPE AND COLOR BOTH DAY AND NIGHT. SIGN ILLUMANTION MAY BE EITHER IN-TERNAL OR EXTERNAL. ROADWAY LIGHTING DOES NOT MEET THE REQUIREMENTS FOR SIGN ILLUMANTION.
2. TYPE A FLASHING WARNING LIGHTS MAY BE USED IN CONJUNCTION WITH SIGNS AT NIGHT. STANDARD ORANGE FLAGS MAY BE USED FOR DAY TIME OPERATIONS. HOWEVER, NEITHER LIGHTS NOR FLAGS MAY BLOCK THE SIGN LEGEND.
3. SIGNS SHOULD BE LOCATED ON THE RIGHT-HAND SIDE OF THE ROADWAY. WHEN SPECIAL EMPHASIS IS NEEDED, SIGNS MAY BE PLACE ON BOTH THE LEFT AND RIGHT SIDES OF ROADWAY. SIGNS SHALL BE PLACED ON BOTH THE LEFT AND RIGHT SIDES OF ONE-WAY OR DIVIDED ROADWAYS. SIGNS USED FOR LONG-TERM STATIONARY AND INTERMEDIATE-TERM STATIONARY WORK SHALL BE MOUNTED AT A HEIGHT OF AT LEAST 2.1 m (7'), MEASURED FROM THE BOTTOM OF THE SIGN. THE HEIGHT TO THE BOTTOM OF A SECONDARY SIGN MOUNTED BELOW ANOTHER SIGN MAY BE 0.3 m (1') LESS THAN THE APPROPRIATE HEIGHT ABOVE.
4. SIGNS MAY BE MOUNTED ON PORTABLE SUPPORTS FOR SHORT-TERM, SHORT DURATION, MOBILE CON-DITIONS AND EMERGENCIES. SIGNS MOUNTED ON PORTABLE SUPPORTS SHALL BE AT A HEIGHT OF AT LEAST 0.3 m (1'), MEASURED FROM THE BOTTOM OF THE SIGN.
5. ALL SIGN SYSTEMS SHOULD BE CRASHWORTHY. NO SIGN MOUNTS SHALL BLOCK OR IMPEDE SIDEALKS UNLESS NO OTHER OPTION IS AVAILABLE. ONLY SANDBAGS SHOULD BE USED FOR BALLASTING SIGN MOUNTS.

TABLE VI-3 TYPICAL CONSTRUCTION WARNING SIGN SIZE AND SPACING

Roadway Classification	Posted Speed	Sign Spacing ★	Long-term Stationary Or Intermediate-term Stationary Approaching Warning Signs C920 Series And C922-1 Sign		Short-term Stationary Short Duration Approach Warning Signs C922 Series		Other Warning Signs
			Standard	Minimum✱	Standard	Minimum✱	Standard
Conven.	KPH (MPH)	meter (feet)	mm (inches)	mm (inches)	mm (inches)	mm (inches)	mm (inches)
	50 (30)	40 (120)	1220x1220 (48x48)	915x915 (36x36)			
	55 (35)	50 (160)			915x915 (36x36)		915x915 (36x36)
	65 (40)	75 (240)		↓			
	70 (45)	100 (320)		Use Standard Size		Use Standard Size	
	80 (50)	120 (400)					
	90 (55)	150 (500) 2					
	100 (60)	180 (600) 2			1220x1220 (48x48)		1220x1220 (48x48)
	105 (65)	210 (700) 2					
	115 (70)	240 (800) 2					
Exp. or Fwy	★★	★★ 3	↓	↓	★★★	★★★	★★★

✱ MINIMUM DISTANCE FROM WORK TO 1st ADVANCE WARNING SIGN AND/OR DISTANCE BETWEEN EACH ADDITIONAL SIGN.
★★ FOR TYPICAL SIGN SPACINGS ON EXPRESSWAYS AND FREEWAYS, REFER TO THE CURRENT ADDITION OF TMUTCD.
★★★ SMALLER SIGN SIZES MAY BE USED WHERE SIGN DESIGNS HAVE NOT BEEN INCLUDED IN THE "STANDARD HIGHWAY SIGNS DESIGN MANUAL".

1. SPECIAL OR LARGER SIZE SIGNS MAY BE USED AS NECESSARY.
2. DISTANCE BETWEEN SIGNS SHOULD BE INCREASED AS REQUIRED TO HAVE 450 m (1500') OR MORE ADVANCE WARNING.
3. DISTANCE BETWEEN SIGNS SHOULD BE INCREASED AS REQUIRED TO HAVE A 0.8 km (1/2 MILE) OR MORE ADVANCE WARNING.
4. FOR USE ONLY ON SECONDARY ROADS OR CITY STREETS WHERE SPEEDS ARE LOW.

CITY OF AUSTIN DEPARTMENT OF PUBLIC WORKS	TRAFFIC CONTROL SIGNS	
RECORD COPY SIGNED BY SAM ANGOORI 01/04/10 ADOPTED	THE ARCHITECT/ENGINEER ASSUMES RESPONSIBILITY FOR APPROPRIATE USE OF THIS STANDARD.	STANDARD NO. 804S-5 7 OF 13

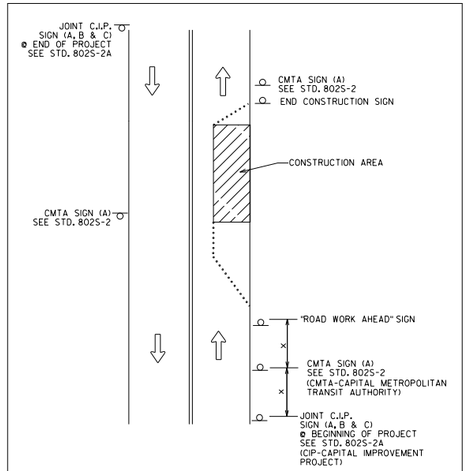

NOTES:

1. OTHER REQUIRED SIGNS NOT SHOWN FOR CLARITY.
2. "X" DISTANCES SAME AS STANDARD TABLE SHOWN ON SHEET 13 OF 13.

SEE STANDARD 804S-5
SHEET 12 OF 13 AND SHEET 13 OF 13
FOR GENERAL NOTES AND DEVICE SPACING.

CITY OF AUSTIN DEPARTMENT OF PUBLIC WORKS	TYPICAL CMTA/C.I.P. SIGN LOCATIONS	
RECORD COPY SIGNED BY SAM ANGOORI 01/04/10 ADOPTED	THE ARCHITECT/ENGINEER ASSUMES RESPONSIBILITY FOR APPROPRIATE USE OF THIS STANDARD.	STANDARD NO. 804S-5 8 OF 13

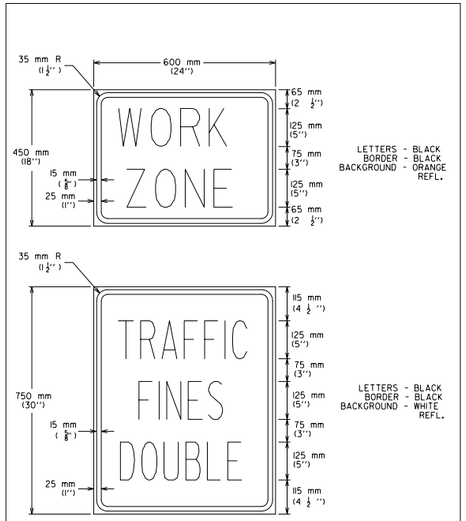

SEE STANDARD DETAIL 804S-5
SHEET 5 OF 13 FOR SKID-
MOUNTED SIGN SUPPORT.

CITY OF AUSTIN DEPARTMENT OF PUBLIC WORKS	SPECIAL WORK ZONE SIGNS	
RECORD COPY SIGNED BY SAM ANGOORI 01/04/10 ADOPTED	THE ARCHITECT/ENGINEER ASSUMES RESPONSIBILITY FOR APPROPRIATE USE OF THIS STANDARD.	STANDARD NO. 804S-5 9 OF 13

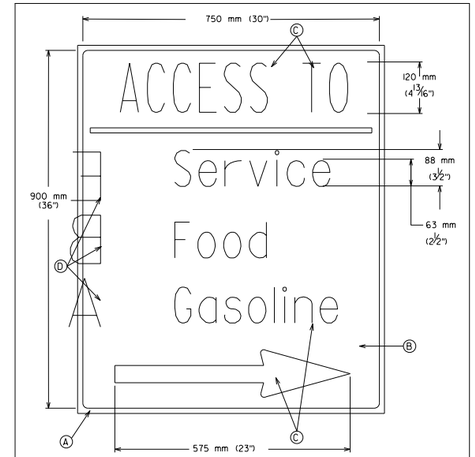

(A) 50 mm 1/2") WHITE RETRROREFLECTIVE BORDER
(B) BLUE RETROFEFLECTIVE BACKGROUND
(C) WHITE RETRROREFLECTIVE ARROW AND LETTERS
(D) WHITE RETROREFELCTIVE BUSINESS LOGO

NOTES:

1. CONTRACTORS CAN MAKE BUSINESS NAMES REMOVABLE/CHANGEABLE AS AN OPTION.
2. BUSINESS LOGO ARE OPTIONAL. IF USED LETTERING MUST BE MINIMIZED.

CITY OF AUSTIN DEPARTMENT OF PUBLIC WORKS	SPECIAL WORK ZONE SIGNS	
RECORD COPY SIGNED BY SAM ANGOORI 01/04/10 ADOPTED	THE ARCHITECT/ENGINEER ASSUMES RESPONSIBILITY FOR APPROPRIATE USE OF THIS STANDARD.	STANDARD NO. 804S-5 10 OF 13

NUMBER	DATE	REVISION	APPROVED

STATE OF TEXAS
GREGORY C. CALKINS
111309
LICENSED
PROFESSIONAL ENGINEER
9/28/2020

Binkley & Barfield, Inc
consulting engineers
Texas Registration Number F-257

CEDAR PARK

ANDERSON MILL ROAD

STANDARD DETAILS TRAFFIC CONTROL

DESIGN BY:	GCC	SCALE: N/A	
DRAWN BY:	DSH		
CHECKED BY:	BMB		
APPROVED BY:	BDR	SHEET: 6 OF 7	
PROJECT NO:	156402		
DATE:	9/28/2020	PAGE: 150	

9/28/2020
1:25:17 PM
I:\156402*Anderson*Mill*Road\CADD\SHEETS\TCSD1*AM*06.dgn

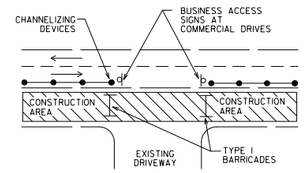

DRIVEWAY ACCESS BARRICADE DETAIL

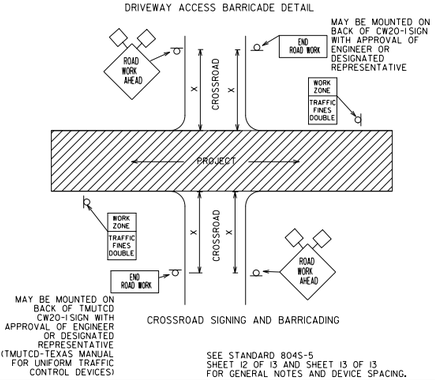

CROSSROAD SIGNING AND BARRICADING

SEE STANDARD 804S-5 SHEET 12 OF 13 AND SHEET 13 OF 13 FOR GENERAL NOTES AND DEVICE SPACING.

CITY OF AUSTIN DEPARTMENT OF PUBLIC WORKS	SIGNING AND BARRICADING CROSSROAD & DRIVEWAY	
RECORD COPY SIGNED BY SAM ANGDORI 01/04/10 ADOPTED	THE ARCHITECT/ENGINEER ASSUMES RESPONSIBILITY FOR APPROPRIATE USE OF THIS STANDARD.	STANDARD NO. 804S-5 11 OF 13

1. ALL TRAFFIC CONTROL DEVICES, SIGNS, BARRICADES AND WARNING SIGNS SHALL BE FURNISHED, PLACED, CONSTRUCTED AND MAINTAINED IN THE APPROPRIATE TYPES AND SIZES AND FLAGGER OPERATIONS EXECUTED IN ACCORDANCE WITH THE CURRENT EDITION OF THE TEXAS MANUAL ON UNIFORM CONTROL DEVICES (TMUTCD), THE CITY OF AUSTIN STANDARD SPECIFICATIONS SERIES 800 AND THE CITY OF AUSTIN TRANSPORTATION CRITERIA MANUAL, OR AS DIRECTED BY THE ENGINEER OR DESIGNATED REPRESENTATIVE. IF A CONFLICT ARISES THEN THE CITY OF AUSTIN TRANSPORTATION CRITERIA MANUAL SHALL CONTROL UNLESS OTHERWISE INSTRUCTED BY THE ENGINEER OR DESIGNATED REPRESENTATIVE.
2. THE CONTRACTOR SHALL NOTIFY THE TRANSPORTATION DIVISION OF THE DEPARTMENT OF PUBLIC WORKS AT 974-7024 NO LATER THAN THE MONDAY OF THE WEEK DURING WHICH THE CONTRACTOR INTENDS TO SET UP BARRICADES TO START CONSTRUCTION.
3. PROPOSED CONSTRUCTION TRAFFIC MOVEMENTS MAY REQUIRE EXISTING SIGNAL HEADS TO BE RELOCATED. THE CITY OF AUSTIN WILL REVIEW SIGNAL HEAD LOCATIONS DURING CONSTRUCTION AND PERFORM THE REQUIRED ADJUSTMENTS. THE CONTRACTOR SHALL CONTACT THE TRANSPORTATION DIVISION OF THE DEPARTMENT OF PUBLIC WORKS AT 974-7024, THREE (3) DAYS PRIOR TO PLACEMENT ANY TRAFFIC CONTROLS WHICH MAY REQUIRE SIGNAL HEAD ADJUSTMENTS/RELOCATION.
4. THE CONTRACTOR SHALL PROVIDE ONE (1) FULL-TIME OFF-DUTY, UNIFORMED AUSTIN POLICE DEPARTMENT CERTIFIED PEACE OFFICER AND ONE (1) VEHICLE OF THE TYPE APPROVED BY THE ENGINEER OR DESIGNATED REPRESENTATIVE FOR TEMPORARY LANE CLOSURES WHEN UNDERSEALING, MILLING, PAVING AND WHEN WORKING IN INTERSECTIONS AS PART OF THE TRAFFIC CONTROL OPERATIONS. THE PEACE OFFICER SHALL BE ABLE TO SHOW PROOF OF CERTIFICATION BY THE TEXAS COMMISSION ON LAW ENFORCEMENT OFFICER STANDARDS.
5. THE CONTRACTOR SHALL NOTIFY ALL OTHER GOVERNMENTAL AGENCIES WHOSE RIGHTS-OF-WAY ARE AFFECTED BY HIS WORK ACTIVITIES. THE CONTRACTOR SHALL PROVIDE ANY ADDITIONAL TRAFFIC CONTROL DEVICES THAT THEY MAY NEED.
6. THE CONTRACTOR SHALL MAINTAIN ONE (1) DUST-FREE LANE OF TRAFFIC IN EACH DIRECTION AT ALL TIMES, UNLESS OTHERWISE NOTED IN THE DRAWINGS OR APPROVED THE ENGINEER OR DESIGNATED REPRESENTATIVE.
7. THERE SHALL BE A MINIMUM OF THREE (3) METERS (10 FEET) CLEAR WIDTH FOR EACH LANE OF TRAFFIC IN CHANNELIZED AREAS, UNLESS OTHERWISE NOTED ON THE DRAWINGS OR APPROVED BY THE ENGINEER OR DESIGNATED REPRESENTATIVE.
8. THE CONTRACTOR SHALL MAINTAIN DRIVEWAY ACCESS AT ALL TIMES. IF ACCESS CANNOT BE MAINTAINED, THE CONTRACTOR WITH THE APPROVAL OF THE ENGINEER OR DESIGNATED REPRESENTATIVE SHALL PROVIDE AT LEAST 24 HOUR WRITTEN NOTICE OF LIMITED ACCESS TO AFFECTED PROPERTY OWNERS. THE CONTRACTOR SHALL PROVIDE BUSINESS ACCESS SIGNS AS NEEDED TO NFORM DRIVERS OF THE LOCATIONS OF ALL DRIVEWAYS.
9. TEMPORARY LANE CLOSURES IN THE CENTRAL BUSINESS DISTRICT (CBD) OR ON ARTERIAL STREETS SHALL NOT BE PERMITTED DURING THE HOURS OF 7 AM TO 9 AM AND 4 PM TO 6PM MONDAY THROUGH FRIDAY UNLESS PRIOR APPROVAL HAS BEEN OBTAINED FROM THE TRANSPORTATION DIVISION.
10. TRAFFIC CONTROL SHOWN ON STANDARD DETAILS IS TYPICAL. ADDITIONAL SIGNING AND/OR BARRICADING, AS WELL AS TEMPORARY PAVEMENT MARKINGS AND OBLITERATION/RESTORATION OF EXISTING PAVEMENT MARKINGS, MAY BE REQUIRED DEPENDING ON FIELD CONDITIONS. FIELD ADJUSTMENTS TO TRAFFIC CONTROLS WILL NOT BE PAID FOR DIRECTLY, BUT WILL BE CONSIDERED SUBSIDIARY TO ITEM NO. 803S "BARRICADES, SIGNS AND TRAFFIC HANDLING".
11. THE CONTRACTOR SHALL DESIGNATE A COMPETENT PERSON FOR TRAFFIC CONTROL. THE COMPETENT PERSON SHALL MAKE INSPECTIONS OF THE TRAFFIC CONTROL DEVICES AT LEAST TWO (2) TIMES A DAY (ONCE AT THE BEGINNING OF THE DAY AND ONCE AT THE END OF THE DAY), INCLUDING NON-WORKING DAYS, ENSURING THAT ALL DEVICES ARE IN THEIR PROPER PLACE AND ARE IN WORKING ORDER.
12. ALL DEVICES SHALL BE MADE USING MATERIALS LISTED ON THE TxDOT APPROVED PRODUCTS LIST.

CITY OF AUSTIN DEPARTMENT OF PUBLIC WORKS	GENERAL TRAFFIC CONTROL NOTES	
RECORD COPY SIGNED BY SAM ANGDORI 01/04/10 ADOPTED	THE ARCHITECT/ENGINEER ASSUMES RESPONSIBILITY FOR APPROPRIATE USE OF THIS STANDARD.	STANDARD NO. 804S-5 12 OF 13

13. ALL PERSONS WORKING WITHIN THE RIGHT-OF-WAY SHALL WEAR A BRIGHTLY COLORED SAFETY VEST. FOR NIGHTTIME WORK THE VEST SHALL BE RETROREFLECTIVE.
14. WHEN AN INTERSECTION IS CLOSED FOR CONSTRUCTION, THE CONTRACTOR SHALL PROCEED WITH CONSTRUCTION IN SUCH A MANNER THAT THE CLOSURE TIME IS MINIMIZED.
15. THE CONTRACTOR SHALL NOTIFY THE CAPITAL METRO DISPATCHER AT 385-4295 ONE (1) WEEK PRIOR TO LANE CLOSURES ADJACENT TO BUS STOPS.

DURATION OF WORK

WORK DURATION IS A MAJOR FACTOR IN DETERMINING THE NUMBER AND TYPES OF DEVICES USED IN TEMPORARY TRAFFIC ZONES. THE FIVE (5) CATEGORIES OF WORK DURATION AND THEIR TIME AT A LOCATION ARE AS FOLLOWS:

- LONG-TERM STATIONARY-WORK THAT OCCUPIES A LOCATION FOR MORE THAN 3 DAYS.
- INTERMEDIATE-TERM STATIONARY-WORK THAT OCCUPIES A LOCATION FROM OVERNIGHT TO 3 DAYS.
- SHORT-TERM STATIONARY-DAYTIME WORK THAT OCCUPIES A LOCATION FROM 1 TO 12 HOURS.
- SHORT-DURATION WORK THAT OCCUPIES A LOCATION UP TO 1HOUR.
- MOBILE-WORK THAT MOVES INTERMITTENTLY OR CONTINUOUSLY.

Typical Transition Lengths and Suggested Maximum Spacing of Devices

		Minimum Desirable Taper Lengths (L) Meters (Feet)			Suggested Max. Device Spacing		Suggested Sign Spacing Meters (Feet)
Posted Speed KPH (MPH)	Formula	3.0(10) Offset Meters (feet)	3.3(11) Offset Meters (feet)	3.6(12) Offset Meters (feet)	On a taper Meters (feet)	On a tangent Meters (feet)	"X" Dimension
50 (30)	$L=\frac{WS^2}{60}$	45 (150)	50 (165)	55 (180)	9 (30)	15-20 (60-75)	40 (120)
55 (35)		65 (205)	70 (225)	75 (245)	10 (35)	25-25 (70-90)	50 (160)
65 (40)		80 (265)	90 (295)	100 (320)	12 (40)	25-30 (80-100)	75 (240)
70 (45)	L=WS	135 (450)	145 (495)	165 (540)	13 (45)	25-30 (90-110)	100 (320)
80 (50)		150 (500)	165 (550)	180 (600)	15 (50)	30-35 (100-125)	120 (400)
90 (55)		165 (550)	185 (605)	200 (660)	16 (55)	35-40 (110-140)	150 (500)
100 (60)		180 (600)	200 (660)	220 (720)	18 (60)	40-45 (120-150)	180 (600)
105 (65)		195 (650)	215 (715)	235 (780)	19 (65)	40-50 (130-165)	210 (700)
115 (70)		215 (700)	235 (770)	255 (840)	21 (70)	45-55 (140-175)	240 (800)

CITY OF AUSTIN DEPARTMENT OF PUBLIC WORKS	GENERAL TRAFFIC CONTROL NOTES	
RECORD COPY SIGNED BY SAM ANGDORI 01/04/10 ADOPTED	THE ARCHITECT/ENGINEER ASSUMES RESPONSIBILITY FOR APPROPRIATE USE OF THIS STANDARD.	STANDARD NO. 804S-5 13 OF 13

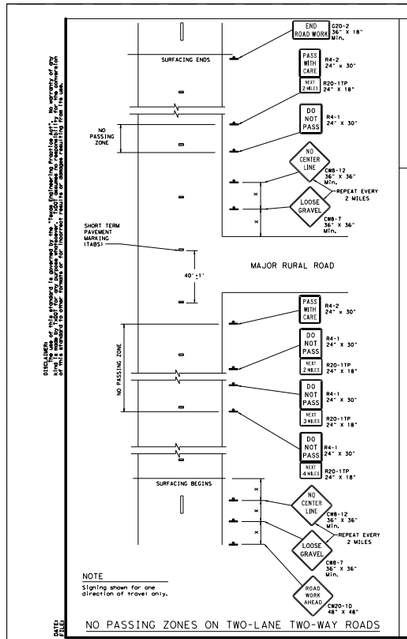

NOTE

Signing shown for one direction of travel only.

NO PASSING ZONES ON TWO-LANE TWO-WAY ROADS

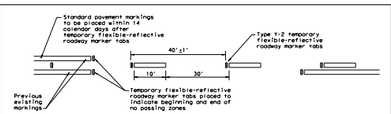

TABS ON CENTERLINES OF TWO-LANE TWO-WAY ROADS

For seal coat, micro-surface or similar operations

"DO NOT PASS" SIGN (R4-1) and NO-PASSING ZONES

A. Prior to the beginning of construction, all currently erected no-passing zones shall be signed with the DO NOT PASS (R4-1) signs and PASS WITH CARE (R4-2) signs placed at the beginning and end of each zone for each direction of travel except as otherwise provided herein. Signs marking these individual no-passing zones need not be covered prior to construction if the signs supplement the existing pavement markings.

B. At the discretion of the Engineer, in areas of numerous no-passing zones, several zones may be combined as a single zone. If passing is to be prohibited over one or more sempty sections, a DO NOT PASS sign and the NEXT XX MILES plaque should be repeated every mile to the end of the no-passing zone. In areas where there is considerable distance between no-passing zones, the end of the no-passing zone may be signed with a PASS WITH CARE sign and a NEXT XX MILES plaque.

C. Depending on traffic volumes and length of sections, it may be desirable to prohibit passing throughout the project to prevent damage to windshield and lights. The DO NOT PASS sign and NEXT XX MILES plaque should be used and repeated as often as necessary for this purpose. Where several existing zones are to be combined into one individual no-passing zone, the sign at the beginning of the zone should be covered until the surfacing operation has passed this location so as non to have the DO NOT PASS sign covered until the surfacing operation has passed the end of the zone. The sign at the end of the remain of such combined zones, approximately 30 meters (100 feet) PASS WITH CARE signs should be placed at the beginning and end of the no-passing zones where the surfacing operation has stopped for the day.

D. R4-1 and R4-2 are to remain in place until standard pavement markings are installed.

"NO CENTER LINE" SIGN (CW8-12)

A. Center line markings are yellow pavement markings that delineate the separation of travel lanes that have opposite directions of travel on a roadway. Divided hilgnways do not typically have center line markings.

B. At the time construction activity obliterates the existing center line markingsllow volume roads may not have an existing centerlinel, a NO CENTER LINE (CW8-12) sign should be erected at the beginning of the work area, at approximately 2 mile intervals within the work area, beyond major intersections and other locations deemed necessary by the Engineer.

C. The NO CENTER LINE signs are to remain in place until standard pavement markings are installed.

"LOOSE GRAVEL" SIGN (CW8-7)

A. When construction begins, a LOOSE GRAVEL (CW8-7) sign should be erected at each end of the work area and repeated at intervals of approximately 2 miles in rural areas and closer in urban areas.

B. The LOOSE GRAVEL signs are to remain in place until the condition no longer exists.

PAVEMENT MARKINGS

A. Temporary markings for surfacing projects shall be Temporary Flexible-reflective Roadway Marker Tabs unless otherwise approved by the Engineer. Tabs are to be installed to provide true alignment for striping areas or as directed by the Engineer. Tabs will be placed at the spacing indicated. Tabs should be applied to the pavement no more than two (2) days before the surfacing is applied. After the surfacing is rolled and swept, the cover over the reflective strip shall be removed.

B. Tabs shall not be used to simulate edge lines.

C. Tab placement for overlay/inlay operations shall be as shown on the WZ(STPM) standard sheet.

COORDINATION OF SIGN LOCATIONS

A. The location of warning signs at the beginning and end of a work area are to be coordinated with other signing typically shown on the Barricade and Construction Standards for project limits to ensure adequate sign spacing.

B. Where possible the ROAD WORK AHEAD (CW20-1D), LOOSE GRAVEL (CW8-7), and NO CENTER LINE (CW8-12) signs should be placed in the sequence shown following the OBEY WARNING SIGNS STATE LAW (R20-3T) and the TRAFFIC FINES DOUBLE (R20-5T) sign, and one "X" sign spacing prior to the CONTRACTOR (G20-4)sign typically located at or near the limits of surfacing. LOOSE GRAVEL and NO CENTER LINE signs will then be repeated as described above.

Posted Speed *	Minimum Sign Spacing "X" Distance
30	120'
35	160'
40	240'
45	320'
50	400'
55	500'
60	600'
65	700'
70	800'
75	900'

* Conventional Roads Only

TYPICAL USAGE

MOBILE	SHORT DURATION	SHORT TERM STATIONARY	INTERMEDIATE TERM STATIONARY	LONG TERM STATIONARY
			✓	✓

GENERAL NOTES

1. The traffic control devices detailed on this sheet will be furnished and erected as directed by the Engineer on sections of roadway where tabs must be placed prior to the surfacing operation which will cover or obliterate the existing pavement markings.
2. The devices shown on this sheet are to be used to supplement those required by the BC Standards or others required elsewhere in the plans.
3. Signs shall be erected as detailed on the BC Standards or as shown on the Work Zone Traffic Control Devices List (WZTCD) on supports approved for Long-Term / Intermediate-Term Work Zone Sign Supports.
4. When surfacing operations take place on divided highways, freeways or expressways, the size of diamond shaped construction warning signs shall be 48" x 48".
5. Signs on divided highways, freeways and expressways will be placed on both right and left sides of the roadway based on roadway conditions as directed by the Engineer.

Texas Department of Transportation — Traffic Operations Division Standard

TRAFFIC CONTROL DETAILS FOR SURFACING OPERATIONS

TCP (7-1)-13

FILE# tcp7-1.dgn	DN: TxDOT	CK: TxDOT	DW: TxDOT	CK: TxDOT
©TxDOT March 1991	CONT	SECT	JOB	HIGHWAY
REVISIONS				
4-92 4-98	DIST		COUNTY	SHEET NO.
1-97 7-13				

NUMBER	DATE	REVISION	APPROVED

STATE OF TEXAS
GREGORY C. CALKINS
111309
LICENSED
PROFESSIONAL ENGINEER
9/28/2020

Binkley & Barfield, Inc
consulting engineers
Texas Registration Number F-257

CEDAR PARK

ANDERSON MILL ROAD

STANDARD DETAILS TRAFFIC CONTROL

DESIGN BY:	GCC	SCALE:	N/A
DRAWN BY:	DSH		
CHECKED BY:	BMB	SHEET:	7 OF 7
APPROVED BY:	BDR		
PROJECT NO:	156402	PAGE:	151
DATE:	9/28/2020		

9/28/2020
1:25:25 PM
I:\156402*Anderson*Mill*Road\CADD\SHEETS\TCSD1*AM*07.dgn

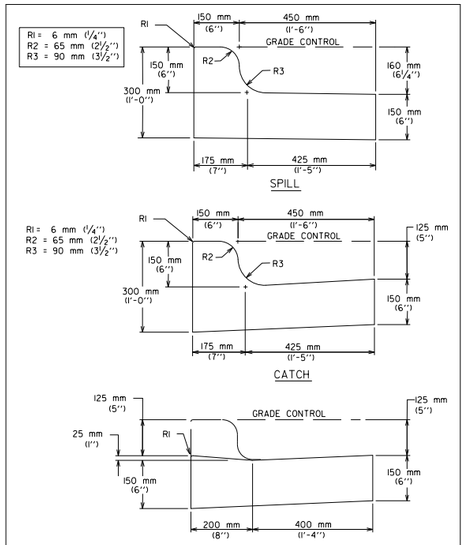

CITY OF AUSTIN DEPARTMENT OF PUBLIC WORKS		CURB AND GUTTER SECTION	
RECORD COPY SIGNED BY LINO RIVERA	9/29/99 ADOPTED	THE ARCHITECT/ENGINEER ASSUMES RESPONSIBILITY FOR APPROPRIATE USE OF THIS STANDARD.	STANDARD NO. 430S-1

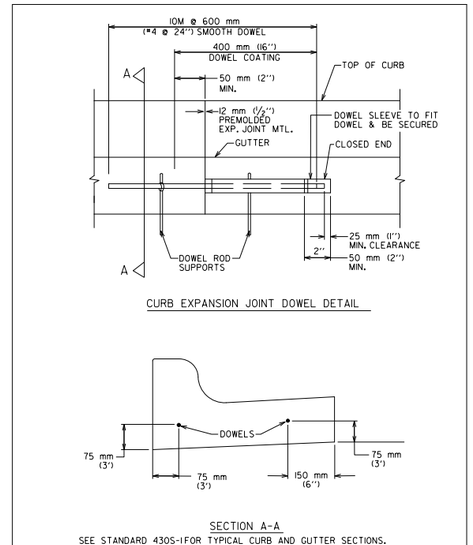

CITY OF AUSTIN DEPARTMENT OF PUBLIC WORKS		CURB EXPANSION JOINT DOWEL DETAIL	
RECORD COPY SIGNED BY LINO RIVERA	9/29/99 ADOPTED	THE ARCHITECT/ENGINEER ASSUMES RESPONSIBILITY FOR APPROPRIATE USE OF THIS STANDARD.	STANDARD NO. 430S-3

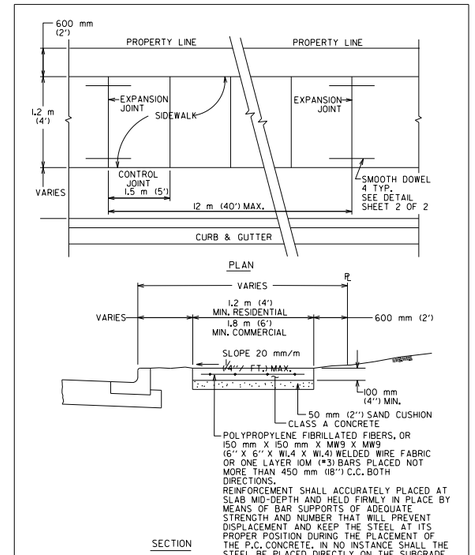

CITY OF AUSTIN DEPARTMENT OF PUBLIC WORKS		SIDEWALK	
RECORD COPY SIGNED BY BILL GARDNER	03/26/08 ADOPTED	THE ARCHITECT/ENGINEER ASSUMES RESPONSIBILITY FOR APPROPRIATE USE OF THIS STANDARD.	STANDARD NO. 432S-1 1 OF 3

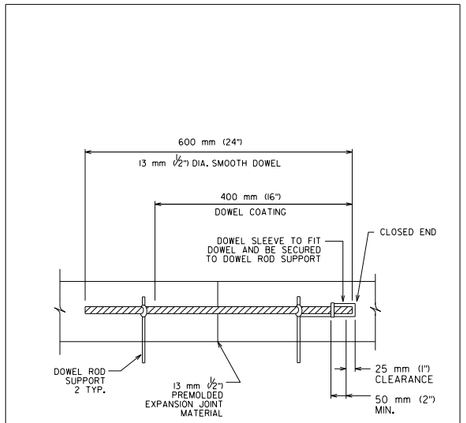

CITY OF AUSTIN DEPARTMENT OF PUBLIC WORKS		SIDEWALK	
RECORD COPY SIGNED BY BILL GARDNER	03/26/08 ADOPTED	THE ARCHITECT/ENGINEER ASSUMES RESPONSIBILITY FOR APPROPRIATE USE OF THIS STANDARD.	STANDARD NO. 432S-1 2 OF 3

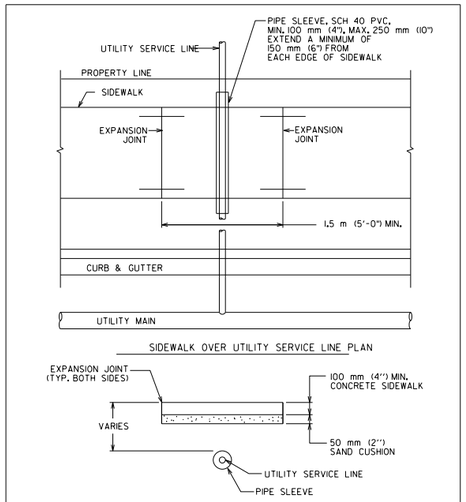

NOTES:
1. THIS STANDARD APPLIES TO THE INSTALLATION OF NEW UTILITIES OR UTILITIES BEING REPLACED BY A NEW LINE.
2. NO JOINTS IN UTILITY SERVICE PIPE TO BE LOCATED INSIDE PVC PIPE SLEEVE.

CITY OF AUSTIN DEPARTMENT OF PUBLIC WORKS		SIDEWALK	
RECORD COPY SIGNED BY BILL GARDNER	03/26/08 ADOPTED	THE ARCHITECT/ENGINEER ASSUMES RESPONSIBILITY FOR APPROPRIATE USE OF THIS STANDARD.	STANDARD NO. 432S-1 3 OF 3

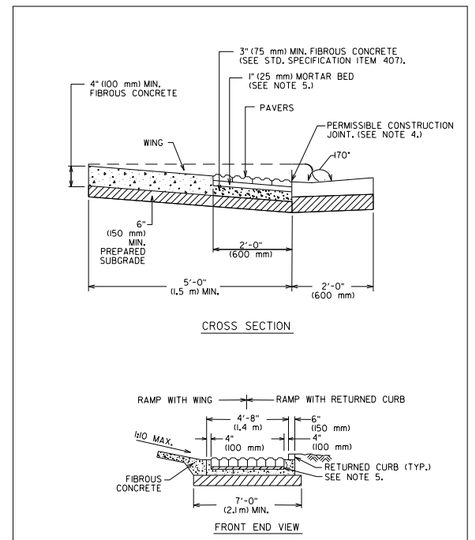

CITY OF AUSTIN DEPARTMENT OF PUBLIC WORKS		DETECTABLE WARNING-PAVER (CITY PROPERTY/EASEMENTS)	
RECORD COPY SIGNED BY BILL GARDNER	06/21/07 ADOPTED	THE ARCHITECT/ENGINEER ASSUMES RESPONSIBILITY FOR APPROPRIATE USE OF THIS STANDARD.	STANDARD NO. 432S-2A 1 OF 2

GENERAL NOTES:

1. THIS STANDARD IS APPLICABLE FOR RAMP CONSTRUCTION ON CITY PROPERTY AND EASEMENT AREAS ONLY.
2. PAVERS ARE REQUIRED FOR ALL CURB RAMP INSTALLATIONS.
3. PAVERS WILL HAVE DETECTABLE WARNING THAT CONSISTS OF RAISED TRUNCATED DOMES WITH A DIAMETER OF 0.9" (23 mm), A NOMINAL HEIGHT OF 0.2" (5 mm) AND A NOMINAL CENTER TO CENTER SPACING OF 2.35" (60 mm) AND SHALL CONSTRAST VISUALLY WITH ADJOINING SURFACES, EITHER LIGHT-ON-DARK OR DARK-ON-LIGHT (Re: ADAAG SECTION 4.29.2). MATERIAL USED TO PROVIDE CONTRAST SHALL BE AN INTEGRAL PART OF THE WALKING SURFACE. PAVER PATTERN SHALL BE BASKET WEAVE UNLESS DIRECTED OTHERWISE BY THE ENGINEER OR DESIGNATED REPRESENTATIVE.
4. TYPICAL SIDEWALK WIDTHS AND CURB RADII ARE SHOWN FOR ILLUSTRATION ONLY. REFER TO THE TRANSPORTATION CRITERIA MANUAL FOR SIDEWALK WIDTHS, CURB RADII AND CURB BASIS.
5. THE PERMISSIBLE CONSTRUCTION JOINT BETWEEN THE PAVERS AND THE ADJOINING SURFACE SHALL BE LIMITED TO 1/4" (6 mm) JOINT SIZE. GAPS LARGER THAN 1/4" (6 mm) MUST BE APPROVED BY THE ENGINEER OR DESIGNATED REPRESENTATIVE. ALL JOINTS BETWEEN BRICKS AND ADJOINING SURFACE SHALL BE MORTAR FILLED UNLESS DIRECTED OTHERWISE BY THE ENGINEER OR DESIGNATED REPRESENTATIVE.
6. MORTAR SHALL CONFORM TO STD. SPECIFICATION ITEM SECTION 403S.3.5. MORTAR AND GROUT. ALL OTHER CONCRETE SHALL CONFORM TO STD. SPECIFICATION ITEM 403S. CONCRETE FOR STRUCTURES, UNLESS OTHERWISE NOTED.
7. CURB RAMPS WITH RETURNED CURB MAY ONLY BE USED WHERE PEDESTRIANS WOULD NOT NORMALLY WALK DIAGONALLY ACROSS THE RAMP.

CITY OF AUSTIN DEPARTMENT OF PUBLIC WORKS		DETECTABLE WARNING-PAVER (CITY PROPERTY/EASMENTS)	
RECORD COPY SIGNED BY BILL GARDNER	06/21/07 ADOPTED	THE ARCHITECT/ENGINEER ASSUMES RESPONSIBILITY FOR APPROPRIATE USE OF THIS STANDARD.	STANDARD NO. 432S-2A 2 OF 2

NUMBER	DATE	REVISION	APPROVED

STATE OF TEXAS
GREGORY C. CALKINS
111309
LICENSED
PROFESSIONAL ENGINEER
9/28/2020

Binkley & Barfield, Inc
consulting engineers
Texas Registration Number F-257

CEDAR PARK

ANDERSON MILL ROAD

STANDARD DETAILS PAVING

DESIGN BY:	GCC	SCALE: N/A	
DRAWN BY:	DSH		
CHECKED BY:	BMB		
APPROVED BY:	BDR	SHEET: 1 OF 5	
PROJECT NO:	156402		
DATE:	9/28/2020	PAGE: 152	

9/28/2020
1:25:29 PM
I:\156402*Anderson*Mill*Road\CADD\SHEETS\RDSD1*AM*01.dgn

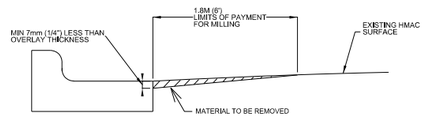

EDGE MILLING DETAIL

CITY OF AUSTIN DEPARTMENT OF PUBLIC WORKS		HMAC PAVEMENT EDGE MILLING DETAIL	
RECORD COPY SIGNED BY SAM ANGOORI	07/01/09 ADOPTED	THE ARCHITECT/ENGINEER ASSUMES RESPONSIBILITY FOR APPROPRIATE USE OF THIS STANDARD.	STANDARD NO. 315S-1

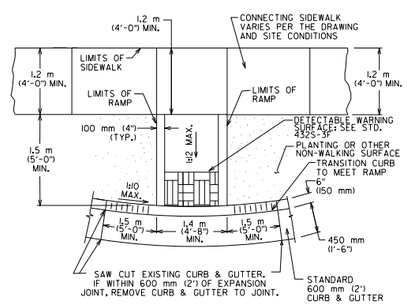

CITY OF AUSTIN DEPARTMENT OF PUBLIC WORKS		TYPE IB SIDEWALK CURB RAMP	
RECORD COPY SIGNED BY BILL GARDNER	9/14/05 ADOPTED	THE ARCHITECT/ENGINEER ASSUMES RESPONSIBILITY FOR APPROPRIATE USE OF THIS STANDARD.	STANDARD NO. 432S-5B

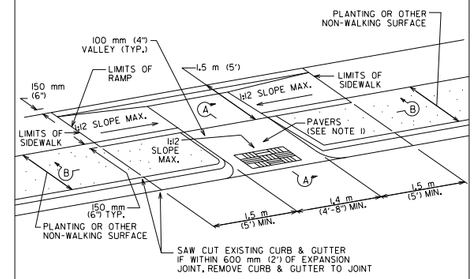

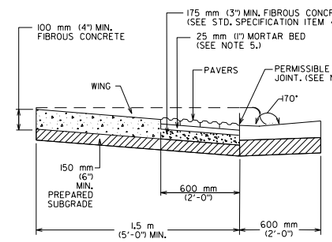

SECTION A-A

CITY OF AUSTIN DEPARTMENT OF PUBLIC WORKS		COMBINED SIDEWALK CURB RAMP WITH PAVERS	
RECORD COPY SIGNED BY BILL GARDNER	03/13/06 ADOPTED	THE ARCHITECT/ENGINEER ASSUMES RESPONSIBILITY FOR APPROPRIATE USE OF THIS STANDARD.	STANDARD NO. 432S-3F 1 OF 2

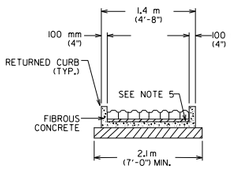

SECTION B-B

GENERAL NOTES:

1. THIS STANDARD IS APPLICABLE FOR RAMP CONSTRUCTION WITHIN RIGHT-OF-WAY OR EASEMENT ONLY.
2. PAVERS WILL HAVE DETECTABLE WARNING THAT CONSISTS OF RAISED TRUNCATED DOMES WITH A DIAMETER OF 23 mm (0.9"), A NOMINAL HEIGHT OF 5 mm (0.2") AND A NOMINAL CENTER TO CENTER SPACING OF 60 mm (2.35") AND SHALL CONTRAST VISUALLY WITH ADJOINING SURFACES, EITHER LIGHT-ON-DARK OR DARK-ON-LIGHT (Re: ADAAG SECTION 4.29.2). MATERIAL USED TO PROVIDE CONTRAST SHALL BE AN INTEGRAL PART OF THE WALKING SURFACE. A BASKET WEAVE PAVER PATTERN SHALL BE USED UNLESS DIRECTED BY THE ENGINEER OR DESIGNATED REPRESENTATIVE. PAVER PATTERN VARIES PER MANUFACTURER'S RECOMMENDATIONS. REFER TO STANDARD DETAIL 432S-5 FOR PAVER BASE PREPARATION DETAILS.
3. THE CURB, GUTTER AND RAMP SYSTEM SHALL BE CONFIGURED TO MAINTAIN ALL RUNOFF FROM A 25 YEAR FREQUENCY STORM WITHIN THE RIGHT-OF-WAY (DRAINAGE CRITERIA MANUAL SECTION 1.2.2.B).
4. TYPICAL SIDEWALK WIDTHS AND CURB RADII ARE SHOWN FOR ILLUSTRATION ONLY. REFER TO THE TRANSPORTATION CRITERIA MANUAL FOR SIDEWALK WIDTHS, CURB RADII AND CURB BASIC REQUIREMENTS.
5. THE PERMISSIBLE CONSTRUCTION JOINT BETWEEN THE PAVERS AND THE ADJOINING SURFACE SHALL BE LIMITED TO 6 mm (1/4") JOINT SIZE. GAPS LARGER THAN 6 mm (1/4") MUST BE APPROVED BY THE ENGINEER OR DESIGNATED REPRESENTATIVE. ALL JOINTS BETWEEN BRICKS AND ADJOINING SURFACE SHALL BE MORTAR FILLED UNLESS DIRECTED OTHERWISE BY THE ENGINEER OR DESIGNATED REPRESENTATIVE.
6. MORTAR SHALL CONFORM TO STD. SPECIFICATION ITEM SECTION 403S.3.5. MORTAR AND GROUT. ALL OTHER CONCRETE SHALL CONFORM TO STD. SPECIFICATION ITEM 403S. CONCRETE FOR STRUCTURES, UNLESS OTHERWISE NOTED.
7. CURB RAMPS WITH 100 mm (4") CONCRETE VALLEY MAY ONLY BE USED WHERE PEDESTRIANS WOULD NOT NORMALLY WALK DIAGONALLY ACROSS THE RAMP.

CITY OF AUSTIN DEPARTMENT OF PUBLIC WORKS		COMBINED SIDEWALK CURB RAMP WITH PAVERS	
RECORD COPY SIGNED BY BILL GARDNER	03/13/06 ADOPTED	THE ARCHITECT/ENGINEER ASSUMES RESPONSIBILITY FOR APPROPRIATE USE OF THIS STANDARD.	STANDARD NO. 432S-3F 2 OF 2

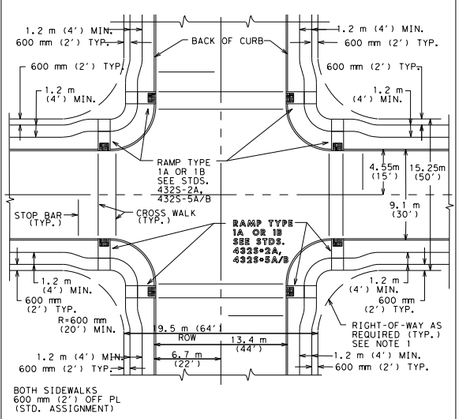

TYPICAL PLAN

CITY OF AUSTIN DEPARTMENT OF PUBLIC WORKS		TYPE 1A/1B CURB RAMPS- FULL INTERSECTION	
RECORD COPY SIGNED BY BILL GARDNER	03/13/06 ADOPTED	THE ARCHITECT/ENGINEER ASSUMES RESPONSIBILITY FOR APPROPRIATE USE OF THIS STANDARD.	STANDARD NO. 432S-3B 1 OF 3

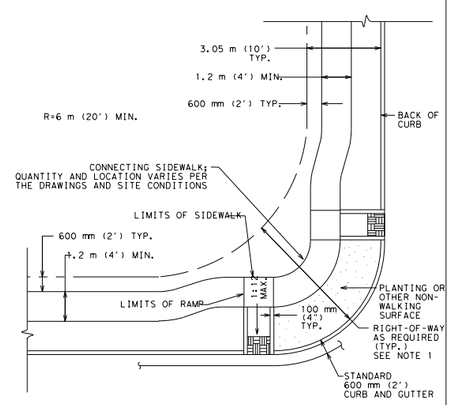

TYPICAL PLAN

CITY OF AUSTIN DEPARTMENT OF PUBLIC WORKS		TYPE 1A/1B CURB RAMPS- FULL INTERSECTION	
RECORD COPY SIGNED BY BILL GARDNER	03/13/06 ADOPTED	THE ARCHITECT/ENGINEER ASSUMES RESPONSIBILITY FOR APPROPRIATE USE OF THIS STANDARD.	STANDARD NO. 432S-3B 2 OF 3

GENERAL NOTES:

1. THIS STANDARD IS APPLICABLE FOR RAMP CONSTRUCTION WITHIN RIGHT-OF-WAY OR EASEMENT ONLY.
2. THIS STANDARD REPRESENTS A TYPICAL CURB RAMP DESIGN FOR A NEWLY CONSTRUCTED INTERSECTION WITH A 6 m (20') RADIUS. LARGER RADII, STREET GRADES, LIMITED SIGHT DISTANCES, STREET CLASSIFICATION, SIGNALIZATION AND OTHER FACTORS MAY REQUIRE THE ENGINEER OR DESIGNATED REPRESENTATIVE TO MODIFY THIS STANDARD. SUFFICIENT RIGHT-OF-WAY SHALL BE DEDICATED SUCH THAT THE ENTIRE CURB RAMP, INCLUDING LANDING, AND THE INTER-CONNECTING SIDEWALK ARE CONTAINED WITHIN THE RIGHT-OF-WAY.
3. THE CURB, GUTTER AND RAMP SYSTEM SHALL BE CONFIGURED TO MAINTAIN ALL RUNOFF FROM A 25 YEAR FREQUENCY STORM WITHIN THE RIGHT-OF-WAY (DRAINAGE CRITERIA MANUAL SECTION 1.2.2.B). WHEN THERE IS AN ELEVATION DIFFERENCE BETWEEN THE BOTTOM OF RAMPS (IE. ELEVATION AT THE GUTTER) WITHIN A QUADRANT OF AN INTERSECTION, THE LOWER ELEVATION RAMP SHALL BE CONSTRUCTED WITH A POSITIVE RAMP SLOPE OF 1:12 IN ACCORDANCE WITH STANDARDS 432S-5, 432S-5A AND 432S-5B.
4. STANDARD ASSIGNMENT OF SIDEWALKS IS 600 mm (2') OFF PROPERTY LINE, EXCEPT AS INDICATED ON THE DRAWINGS.
5. ALTHOUGH CURB RAMPS MAY BE PLACED WITHIN THE RADIUS, PLACING THE RAMP OUTSIDE OF THE RADIUS WILL ALLOW FOR THE GREATEST DIFFERENCE IN ELEVATION BETWEEN THE RAMPS.
6. WINGS ARE REQUIRED ONLY IF PEDESTRIANS WOULD NORMALLY CROSS THE RAMP.
7. LANDINGS SHALL BE FLAT AND MATCH PT, PC OR TOP OF CURB ELEVATION.
8. CURB RAMPS WILL BE PERPENDICULAR TO ROADWAY CENTERLINES AND SHALL ALIGN WITH EACH OTHER.
9. GRADES ON SIDEWALKS LEADING TO OR FROM THE RAMPS SHALL FOLLOW CURB GRADES.
10. THE SLOPE OF THE SIDEWALK WHICH IS LOCATED WITHIN THE RADIUS AND CONNECTS TWO CURB RAMPS SHALL NOT EXCEED 1:20. THE DEVELOPER, AS PART OF THE CURB RAMP INSTALLATION, SHALL CONSTRUCT THIS CONNECTING SIDEWALK.
11. STRIPING AND SIGNAGE NOT REQUIRED IN ALL INSTANCES. STOP BARS, IF REQUIRED, SHALL BE LOCATED 1.2 m (4') FROM CROSSWALK.
12. IF A MEDIAN EXTENDS INTO THE CROSSWALK AREA, AN OPENING SHALL BE PROVIDED IN THE MEDIAN THE SAME WIDTH AS THE CURB RAMP.
13. CURB INLETS SHALL NOT BE LOCATED WITHIN 3.0 m (10') OF A CURB RAMP.
14. GUTTER SHALL PROVIDE SMOOTH TRANSITION TO RAMPS.

CITY OF AUSTIN DEPARTMENT OF PUBLIC WORKS		TYPE 1A/1B CURB RAMPS- FULL INTERSECTION	
RECORD COPY SIGNED BY BILL GARDNER	03/13/06 ADOPTED	THE ARCHITECT/ENGINEER ASSUMES RESPONSIBILITY FOR APPROPRIATE USE OF THIS STANDARD.	STANDARD NO. 432S-3B 3 OF 3

NUMBER	DATE	REVISION	APPROVED

STATE OF TEXAS
GREGORY C. CALKINS
111309
LICENSED
PROFESSIONAL ENGINEER
9/28/2020

Binkley & Barfield, Inc
consulting engineers
Texas Registration Number F-257

CEDAR PARK

ANDERSON MILL ROAD

STANDARD DETAILS
PAVING

DESIGN BY:	GCC	SCALE:	N/A
DRAWN BY:	DSH		
CHECKED BY:	BMB		
APPROVED BY:	BDR	SHEET:	2 OF 5
PROJECT NO:	156402		
DATE:	9/28/2020	PAGE:	153

9/28/2020
1:25:34 PM
I:\156402*Anderson*Mill*Road\CADD\SHEETS\RDSD1*AM*02.dgn

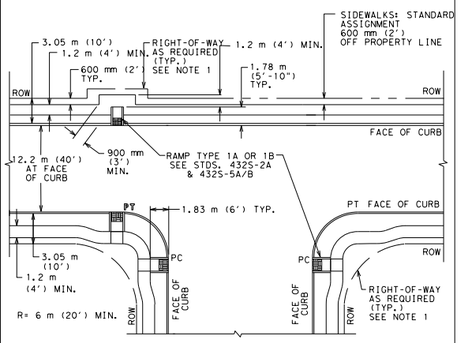

TYPICAL PLAN

CITY OF AUSTIN DEPARTMENT OF PUBLIC WORKS		TYPE 1A/1B CURB RAMPS- "T" INTERSECTION	
RECORD COPY SIGNED BY BILL GARDNER	03/13/06 ADOPTED	THE ARCHITECT/ENGINEER ASSUMES RESPONSIBILITY FOR APPROPRIATE USE OF THIS STANDARD.	STANDARD NO. 432S-3C 1 OF 2

GENERAL NOTES:

1. THIS STANDARD IS APPLICABLE FOR RAMP CONSTRUCTION WITHIN RIGHT-OF-WAY OR EASEMENT ONLY.
2. THIS STANDARD REPRESENTS A TYPICAL CURB RAMP DESIGN FOR A NEWLY CONSTRUCTED INTERSECTION WITH A 6 m (20') RADIUS. LARGER RADII, STREET GRADES, LIMITED SIGHT DISTANCES, STREET CLASSIFICATION, SIGNALIZATION AND OTHER FACTORS MAY REQUIRE THE ENGINEER OR DESIGNATED REPRESENTATIVE TO MODIFY THIS STANDARD. SUFFICIENT RIGHT-OF-WAY SHALL BE DEDICATED SUCH THAT THE ENTIRE CURB RAMP, INCLUDING LANDING, AND THE INTER-CONNECTING SIDEWALK ARE CONTAINED WITHIN THE RIGHT-OF-WAY.
3. THE CURB, GUTTER AND RAMP SYSTEM SHALL BE CONFIGURED TO MAINTAIN ALL RUNOFF FROM A 25 YEAR FREQUENCY STORM WITHIN THE RIGHT-OF-WAY (DRAINAGE CRITERIA MANUAL SECTION 1.2.2.B). WHEN THERE IS AN ELEVATION DIFFERENCE BETWEEN THE BOTTOM OF RAMPS (IE. ELEVATION AT THE GUTTER) WITHIN A QUADRANT OF AN INTERSECTION, THE LOWER ELEVATION RAMP SHALL BE CONSTRUCTED WITH A POSITIVE RAMP SLOPE OF 1:12 IN ACCORDANCE WITH STANDARDS 432S-5, 432S-5A AND 432S-5B.
4. STANDARD ASSIGNMENT OF SIDEWALKS IS 600 mm (2') OFF PROPERTY LINE, EXCEPT AS INDICATED ON THE DRAWINGS.
5. ALTHOUGH CURB RAMPS MAY BE PLACED WITHIN THE RADIUS, PLACING THE RAMP OUTSIDE OF THE RADIUS WILL ALLOW FOR THE GREATEST DIFFERENCE IN ELEVATION BETWEEN THE RAMPS.
6. WINGS ARE REQUIRED ONLY IF PEDESTRIANS WOULD NORMALLY CROSS THE RAMP.
7. LANDINGS SHALL BE FLAT AND MATCH PT, PC OR TOP OF CURB ELEVATION.
8. CURB RAMPS WILL BE PERPENDICULAR TO ROADWAY CENTERLINES AND SHALL ALIGN WITH EACH OTHER.
9. GRADES ON SIDEWALKS LEADING TO OR FROM THE RAMPS SHALL FOLLOW CURB GRADES.
10. THE SLOPE OF THE SIDEWALK WHICH IS LOCATED WITHIN THE RADIUS AND CONNECTS TWO CURB RAMPS SHALL NOT EXCEED 1:20. THE DEVELOPER, AS PART OF THE CURB RAMP INSTALLATION, SHALL CONSTRUCT THIS CONNECTING SIDEWALK.
11. STRIPING AND SIGNAGE NOT REQUIRED IN ALL INSTANCES. STOP BARS, IF REQUIRED, SHALL BE LOCATED 1.2 m (4') FROM CROSSWALK.
12. IF A MEDIAN EXTENDS INTO THE CROSSWALK AREA, AN OPENING SHALL BE PROVIDED IN THE MEDIAN THE SAME WIDTH AS THE CURB RAMP.
13. CURB INLETS SHALL NOT BE LOCATED WITHIN 3.0 m (10') OF A CURB RAMP.
14. GUTTER SHALL PROVIDE SMOOTH TRANSITION TO RAMPS.

CITY OF AUSTIN DEPARTMENT OF PUBLIC WORKS		TYPE 1A/1B CURB RAMPS- "T" INTERSECTION	
RECORD COPY SIGNED BY BILL GARDNER	03/13/06 ADOPTED	THE ARCHITECT/ENGINEER ASSUMES RESPONSIBILITY FOR APPROPRIATE USE OF THIS STANDARD.	STANDARD NO. 432S-3C 2 OF 2

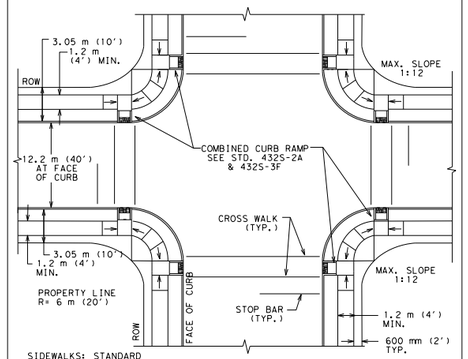

TYPICAL PLAN

CITY OF AUSTIN DEPARTMENT OF PUBLIC WORKS		COMBINED CURB RAMPS- FULL INTERSECTION	
RECORD COPY SIGNED BY BILL GARDNER	03/13/06 ADOPTED	THE ARCHITECT/ENGINEER ASSUMES RESPONSIBILITY FOR APPROPRIATE USE OF THIS STANDARD.	STANDARD NO. 432S-3D 1 OF 3

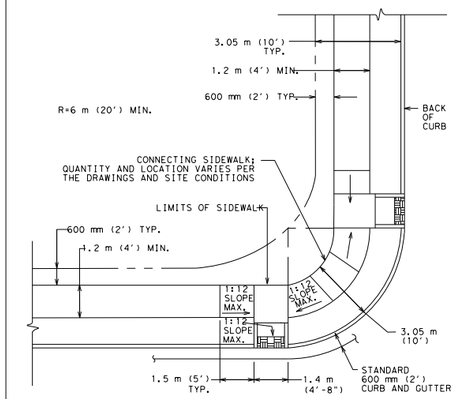

TYPICAL PLAN

CITY OF AUSTIN DEPARTMENT OF PUBLIC WORKS		COMBINED CURB RAMPS- FULL INTERSECTION	
RECORD COPY SIGNED BY BILL GARDNER	03/13/06 ADOPTED	THE ARCHITECT/ENGINEER ASSUMES RESPONSIBILITY FOR APPROPRIATE USE OF THIS STANDARD.	STANDARD NO. 432S-3D 2 OF 3

GENERAL NOTES:

1. THIS STANDARD IS APPLICABLE FOR RAMP CONSTRUCTION WITHIN RIGHT-OF-WAY OR EASEMENT ONLY.
2. THIS STANDARD REPRESENTS A TYPICAL CURB RAMP DESIGN FOR A NEWLY CONSTRUCTED INTERSECTION WITH A 6 m (20') RADIUS. LARGER RADII, STREET GRADES, LIMITED SIGHT DISTANCES, STREET CLASSIFICATION, SIGNALIZATION AND OTHER FACTORS MAY REQUIRE THE ENGINEER OR DESIGNATED REPRESENTATIVE TO MODIFY THIS STANDARD. SUFFICIENT RIGHT-OF-WAY SHALL BE DEDICATED SUCH THAT THE ENTIRE CURB RAMP, INCLUDING LANDING, AND THE INTER-CONNECTING SIDEWALK ARE CONTAINED WITHIN THE RIGHT-OF-WAY.
3. THE CURB, GUTTER AND RAMP SYSTEM SHALL BE CONFIGURED TO MAINTAIN ALL RUNOFF FROM A 25 YEAR FREQUENCY STORM WITHIN THE RIGHT-OF-WAY (DRAINAGE CRITERIA MANUAL SECTION 1.2.2.B). WHEN THERE IS AN ELEVATION DIFFERENCE BETWEEN THE BOTTOM OF RAMPS (IE. ELEVATION AT THE GUTTER) WITHIN A QUADRANT OF AN INTERSECTION, THE LOWER ELEVATION RAMP SHALL BE CONSTRUCTED WITH A POSITIVE RAMP SLOPE OF 1:12 IN ACCORDANCE WITH STANDARDS 432S-5, 432S-5A AND 432S-5B.
4. STANDARD ASSIGNMENT OF SIDEWALKS IS 600 mm (2') OFF PROPERTY LINE, EXCEPT AS INDICATED ON THE DRAWINGS.
5. ALTHOUGH CURB RAMPS MAY BE PLACED WITHIN THE RADIUS, PLACING THE RAMP OUTSIDE OF THE RADIUS WILL ALLOW FOR THE GREATEST DIFFERENCE IN ELEVATION BETWEEN THE RAMPS.
6. WINGS ARE REQUIRED ONLY IF PEDESTRIANS WOULD NORMALLY CROSS THE RAMP.
7. LANDINGS SHALL BE FLAT AND MATCH PT, PC OR TOP OF CURB ELEVATION.
8. CURB RAMPS WILL BE PERPENDICULAR TO ROADWAY CENTERLINES AND SHALL ALIGN WITH EACH OTHER.
9. GRADES ON SIDEWALKS LEADING TO OR FROM THE RAMPS SHALL FOLLOW CURB GRADES.
10. THE SLOPE OF THE SIDEWALK WHICH IS LOCATED WITHIN THE RADIUS AND CONNECTS TWO CURB RAMPS SHALL NOT EXCEED 1:20. THE DEVELOPER, AS PART OF THE CURB RAMP INSTALLATION, SHALL CONSTRUCT THIS CONNECTING SIDEWALK.
11. STRIPING AND SIGNAGE NOT REQUIRED IN ALL INSTANCES. STOP BARS, IF REQUIRED, SHALL BE LOCATED 1.2 m (4') FROM CROSSWALK.
12. IF A MEDIAN EXTENDS INTO THE CROSSWALK AREA, AN OPENING SHALL BE PROVIDED IN THE MEDIAN THE SAME WIDTH AS THE CURB RAMP.
13. CURB INLETS SHALL NOT BE LOCATED WITHIN 3.0 m (10') OF A CURB RAMP.
14. GUTTER SHALL PROVIDE SMOOTH TRANSITION TO RAMPS.

CITY OF AUSTIN DEPARTMENT OF PUBLIC WORKS		COMBINED CURB RAMPS- "T" INTERSECTION	
RECORD COPY SIGNED BY BILL GARDNER	03/13/06 ADOPTED	THE ARCHITECT/ENGINEER ASSUMES RESPONSIBILITY FOR APPROPRIATE USE OF THIS STANDARD.	STANDARD NO. 432S-3D 3 OF 3

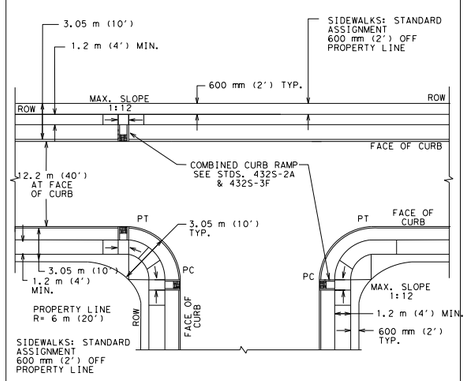

TYPICAL PLAN

CITY OF AUSTIN DEPARTMENT OF PUBLIC WORKS		COMBINED CURB RAMPS- "T" INTERSECTION	
RECORD COPY SIGNED BY BILL GARDNER	03/13/06 ADOPTED	THE ARCHITECT/ENGINEER ASSUMES RESPONSIBILITY FOR APPROPRIATE USE OF THIS STANDARD.	STANDARD NO. 432S-3E 1 OF 2

GENERAL NOTES:

1. THIS STANDARD IS APPLICABLE FOR RAMP CONSTRUCTION WITHIN RIGHT-OF-WAY OR EASEMENT ONLY.
2. THIS STANDARD REPRESENTS A TYPICAL CURB RAMP DESIGN FOR A NEWLY CONSTRUCTED INTERSECTION WITH A 6 m (20') RADIUS. LARGER RADII, STREET GRADES, LIMITED SIGHT DISTANCES, STREET CLASSIFICATION, SIGNALIZATION AND OTHER FACTORS MAY REQUIRE THE ENGINEER OR DESIGNATED REPRESENTATIVE TO MODIFY THIS STANDARD. SUFFICIENT RIGHT-OF-WAY SHALL BE DEDICATED SUCH THAT THE ENTIRE CURB RAMP, INCLUDING LANDING, AND THE INTER-CONNECTING SIDEWALK ARE CONTAINED WITHIN THE RIGHT-OF-WAY.
3. THE CURB, GUTTER AND RAMP SYSTEM SHALL BE CONFIGURED TO MAINTAIN ALL RUNOFF FROM A 25 YEAR FREQUENCY STORM WITHIN THE RIGHT-OF-WAY (DRAINAGE CRITERIA MANUAL SECTION 1.2.2.B). WHEN THERE IS AN ELEVATION DIFFERENCE BETWEEN THE BOTTOM OF RAMPS (IE. ELEVATION AT THE GUTTER) WITHIN A QUADRANT OF AN INTERSECTION, THE LOWER ELEVATION RAMP SHALL BE CONSTRUCTED WITH A POSITIVE RAMP SLOPE OF 1:12 IN ACCORDANCE WITH STANDARDS 432S-5, 432S-5A AND 432S-5B.
4. STANDARD ASSIGNMENT OF SIDEWALKS IS 600 mm (2') OFF PROPERTY LINE, EXCEPT AS INDICATED ON THE DRAWINGS.
5. ALTHOUGH CURB RAMPS MAY BE PLACED WITHIN THE RADIUS, PLACING THE RAMP OUTSIDE OF THE RADIUS WILL ALLOW FOR THE GREATEST DIFFERENCE IN ELEVATION BETWEEN THE RAMPS.
6. WINGS ARE REQUIRED ONLY IF PEDESTRIANS WOULD NORMALLY CROSS THE RAMP.
7. LANDINGS SHALL BE FLAT AND MATCH PT, PC OR TOP OF CURB ELEVATION.
8. CURB RAMPS WILL BE PERPENDICULAR TO ROADWAY CENTERLINES AND SHALL ALIGN WITH EACH OTHER.
9. GRADES ON SIDEWALKS LEADING TO OR FROM THE RAMPS SHALL FOLLOW CURB GRADES.
10. THE SLOPE OF THE SIDEWALK WHICH IS LOCATED WITHIN THE RADIUS AND CONNECTS TWO CURB RAMPS SHALL NOT EXCEED 1:20. THE DEVELOPER, AS PART OF THE CURB RAMP INSTALLATION, SHALL CONSTRUCT THIS CONNECTING SIDEWALK.
11. STRIPING AND SIGNAGE NOT REQUIRED IN ALL INSTANCES. STOP BARS, IF REQUIRED, SHALL BE LOCATED 1.2 m (4') FROM CROSSWALK.
12. IF A MEDIAN EXTENDS INTO THE CROSSWALK AREA, AN OPENING SHALL BE PROVIDED IN THE MEDIAN THE SAME WIDTH AS THE CURB RAMP.
13. CURB INLETS SHALL NOT BE LOCATED WITHIN 3.0 m (10') OF A CURB RAMP.
14. GUTTER SHALL PROVIDE SMOOTH TRANSITION TO RAMPS.

CITY OF AUSTIN DEPARTMENT OF PUBLIC WORKS		COMBINED CURB RAMPS- "T" INTERSECTION	
RECORD COPY SIGNED BY BILL GARDNER	03/13/06 ADOPTED	THE ARCHITECT/ENGINEER ASSUMES RESPONSIBILITY FOR APPROPRIATE USE OF THIS STANDARD.	STANDARD NO. 432S-3E 2 OF 2

NUMBER	DATE	REVISION	APPROVED

STATE OF TEXAS
GREGORY C. CALKINS
111309
LICENSED
PROFESSIONAL ENGINEER
9/28/2020

Binkley & Barfield, Inc
consulting engineers
Texas Registration Number F-257

CEDAR PARK

ANDERSON MILL ROAD

STANDARD DETAILS PAVING

DESIGN BY:	GCC	SCALE: N/A
DRAWN BY:	DSH	
CHECKED BY:	BMB	
APPROVED BY:	BDR	SHEET: 3 OF 5
PROJECT NO:	156402	
DATE:	9/28/2020	PAGE: 154

9/28/2020
1:25:40 PM
I:\156402*Anderson*Mill*Road\CADD\SHEETS\RDSD1*AM*03.dgn

REPAIR OF FULL DEPTH ASPHALTIC CONCRETE (UCM SECTION 5.5.13)

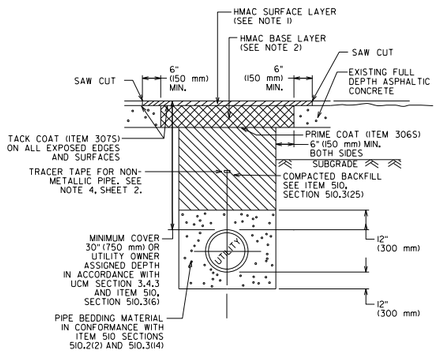

CITY OF AUSTIN DEPARTMENT OF PUBLIC WORKS		FULL DEPTH ASPHALTIC CONCRETE PAVEMENT TRENCH REPAIR	STANDARD NO.
RECORD COPY SIGNED BY BILL GARDNER	9/14/05 ADOPTED	THE ARCHITECT/ENGINEER ASSUMES RESPONSIBILITY FOR APPROPRIATE USE OF THIS STANDARD.	1100S-5 1 OF 2

NOTES:

1. REPLACEMENT AC SURFACE LAYER SHALL BE OF THE TYPE AND THICKNESS BASED ON FUNCTIONAL CLASSIFICATION.
   a) MIN. 2" (50 mm) HMAC TYPE "D" FOR TRENCH REPAIR IN LOCAL/RESIDENTIAL STREETS.
   b) MIN. 3" (75 mm) HMAC TYPE "C" FOR TRENCH REPAIR IN COLLECTOR/ARTERIAL STREETS.
   SEE ITEM 340S, SECTION 340S.4.
2. THE COMBINED THICKNESS OF THE REPLACEMENT AC SURFACE AND BASE LAYERS SHALL MATCH THE THICKNESS OF EXISTING FULL DEPTH AC LAYER. HOWEVER, THE REPLACEMENT AC BASE LAYER SHALL BE A MINIMUM THICKNESS OF 6" (150 mm) OF TYPE A OR B HMA. A BASE LAYER TYPE THAT MATCHES THE NEW HMA SURFACE LAYER (SEE NOTE 1) MAY BE USED, IF THE TOTAL REPAIR AREA IS LESS THAN 300 SQUARE YARDS (250 SQUARE METERS).
3. CLASS "J" PC CONCRETE (ITEM 403S) OR CONTROLLED LOW STRENGTH MATERIAL (CLSM) MAY BE SUBSTITUTED IN THESE REPAIRS FOR THE FLEXIBLE BASE AND COMPACTED BACKFILL. PC CONCRETE GREATER THAN A 2 SACK MIX WILL NOT BE ALLOWED.
4. AS PER CITY OF AUSTIN STANDARD SPECIFICATION 510, SECTION 510.2(8)(K)5, FOR ALL NON-METALLIC PIPE, DIRECTLY ABOVE THE CENTERLINE OF THE PIPE AND A MINIMUM OF 12" (300 mm) BELOW THE SUBGRADE, OR A MINIMUM OF 18" (450 mm) BELOW FINISHED GRADE ON AREAS OUTSIDE THE LIMITS OF PAVEMENT, SHALL BE PLACED INDUCTIVE TRACER TAPE IN ACCORDANCE WITH THE MANUFACTURER'S REQUIREMENTS. THE TAPE SHALL BE ENCASED IN A PROTECTIVE, INERT, PLASTIC JACKET AND COLOR CODED IN ACCORDANCE WITH APWA UNIFORM COLOR CODE.

CITY OF AUSTIN DEPARTMENT OF PUBLIC WORKS		FULL DEPTH ASPHALTIC CONCRETE PAVEMENT TRENCH REPAIR	STANDARD NO.
RECORD COPY SIGNED BY BILL GARDNER	9/14/05 ADOPTED	THE ARCHITECT/ENGINEER ASSUMES RESPONSIBILITY FOR APPROPRIATE USE OF THIS STANDARD.	1100S-5 2 OF 2

REPAIR OF TRANSVERSE EXCAVATIONS (UCM SECTIONS 5.5.7.1 and 5.5.7.2)

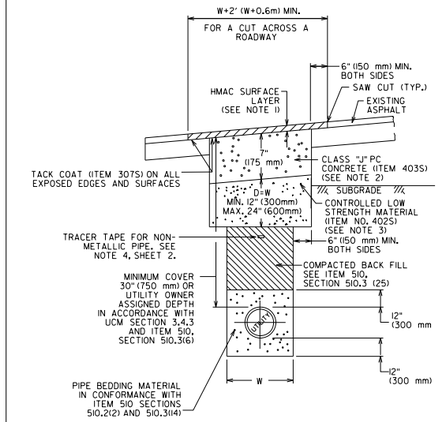

CITY OF AUSTIN DEPARTMENT OF PUBLIC WORKS		TRANSVERSE EXCAVATIONS	STANDARD NO.
RECORD COPY SIGNED BY BILL GARDNER	9/14/05 ADOPTED	THE ARCHITECT/ENGINEER ASSUMES RESPONSIBILITY FOR APPROPRIATE USE OF THIS STANDARD.	1100S-6D 1 OF 2

NOTE:

1. REPLACEMENT AC SURFACE LAYER SHALL BE OF THE TYPE AND THICKNESS BASED ON FUNCTIONAL CLASSIFICATION.
   a) MIN. 2" (50 mm) HMAC TYPE "D" FOR TRENCH REPAIR IN LOCAL/RESIDENTIAL STREETS.
   b) MIN. 3" (75 mm) HMAC TYPE "C" FOR TRENCH REPAIR IN COLLECTOR/ARTERIAL STREETS.
   SEE ITEM 340S, SECTION 340S.4.
2. BASE LAYER ALTERNATIVES:
   a) 7" (175 mm) CLASS "J" PC CONCRETE (ITEM 403S). (A PC CONCRETE GREATER THAN A 2 SACK MIX WILL NOT BE ALLOWED.)
   b) 10" (250 mm) CONTROLLED LOW STRENGTH MATERIAL (ITEM 402S); OR
   c) FLEXIBLE BASE (ITEM 210S) THICKNESS TWICE THE EXISTING BASE THICKNESS BUT A MINIMUM OF 18" (450 mm).
3. CLASS "J" (2 SACK MIX) MAY BE SUBSTITUTED FOR CONTROLLED LOW STRENGTH MATERIAL, IF APPROVED BY THE ENGINEER OR DESIGNATED REPRESENTATIVE. PC CONCRETE GREATER THAN A 2 SACK MIX WILL NOT BE ALLOWED.
4. AS PER CITY OF AUSTIN STANDARD SPECIFICATION 510, SECTION 510.2(8)(K)5, FOR ALL NON-METALLIC PIPE, DIRECTLY ABOVE THE CENTERLINE OF THE PIPE AND A MINIMUM OF 12" (300 mm) BELOW THE SUBGRADE, OR A MINIMUM OF 18" (450 mm) BELOW FINISHED GRADE ON AREAS OUTSIDE THE LIMITS OF PAVEMENT, SHALL BE PLACED INDUCTIVE TRACER TAPE IN ACCORDANCE WITH THE MANUFACTURER'S REQUIREMENTS. THE TAPE SHALL BE ENCASED IN A PROTECTIVE, INERT, PLASTIC JACKET AND COLOR CODED IN ACCORDANCE WITH APWA UNIFORM COLOR CODE.

CITY OF AUSTIN DEPARTMENT OF PUBLIC WORKS		TRANSVERSE EXCAVATIONS	STANDARD NO.
RECORD COPY SIGNED BY BILL GARDNER	9/14/05 ADOPTED	THE ARCHITECT/ENGINEER ASSUMES RESPONSIBILITY FOR APPROPRIATE USE OF THIS STANDARD.	1100S-6D 2 OF 2

REPAIR OF NEW STREETS and ARTERIAL STREETS in GOOD CONDITION (UCM SECTION 5.3.3 and 5.3.4)

TYPICAL RESTORATION FOR EXCAVATION IN INTERSECTIONS

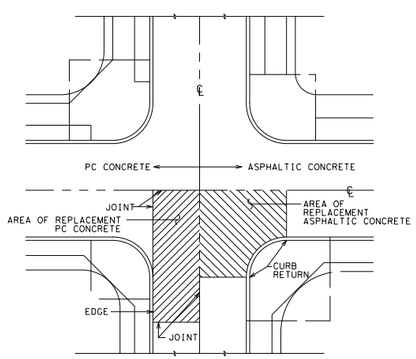

TYPICAL PLAN

TRENCH REPAIRS WITHIN PORTLAND CEMENT CONCRETE PAVEMENTS NOTE:

IF ANY PART OF THE TRENCH REPAIR FALLS WITHIN AN INTERSECTION, THEN THE ENTIRE CONCRETE SLAB FROM JOINT TO JOINT AND JOINT TO EDGE SHALL BE REPLACED, UNLESS OTHERWISE DIRECTED IN WRITING BY THE DIRECTOR.

TRENCH REPAIRS WITHIN ASPHALTIC CONCRETE PAVEMENTS NOTES:

1. IF ANY PART OF THE TRENCH REPAIR FALLS WITHIN AN INTERSECTION, DEFINED FROM CURB RETURN TO CURB RETURN, THE ENTIRE QUADRANT OF THE EXISTING SURFACE SHALL BE REPLACED, UNLESS OTHERWISE DIRECTED IN WRITING BY THE ENGINEER OR DESIGNATED REPRESENTATIVE.
2. A QUADRANT IS DEFINED AS THE CROSS-HATCHED AREA IN THE ABOVE DETAIL.

CITY OF AUSTIN DEPARTMENT OF PUBLIC WORKS		STREET REPAIR REQUIREMENTS	STANDARD NO.
RECORD COPY SIGNED BY BILL GARDNER	9/14/05 ADOPTED	THE ARCHITECT/ENGINEER ASSUMES RESPONSIBILITY FOR APPROPRIATE USE OF THIS STANDARD.	1100S-7 1 OF 3

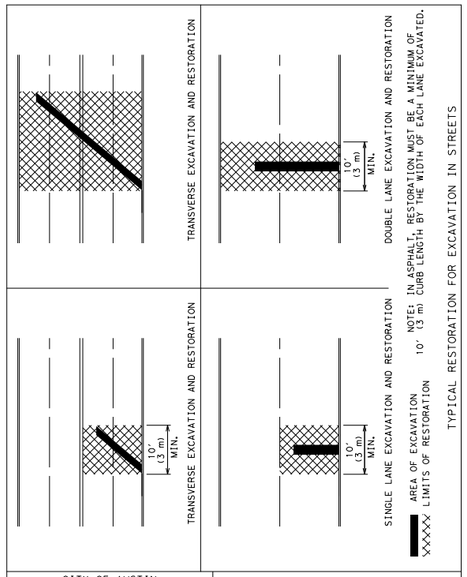

CITY OF AUSTIN DEPARTMENT OF PUBLIC WORKS		STREET REPAIR REQUIREMENTS	STANDARD NO.
RECORD COPY SIGNED BY BILL GARDNER	9/14/05 ADOPTED	THE ARCHITECT/ENGINEER ASSUMES RESPONSIBILITY FOR APPROPRIATE USE OF THIS STANDARD.	1100S-7 2 OF 3

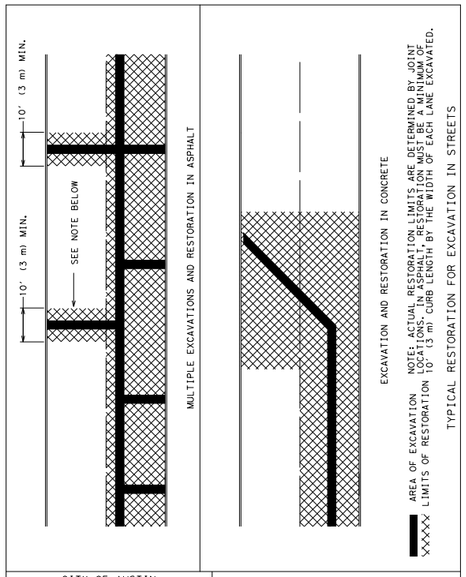

CITY OF AUSTIN DEPARTMENT OF PUBLIC WORKS		STREET REPAIR REQUIREMENTS	STANDARD NO.
RECORD COPY SIGNED BY BILL GARDNER	9/14/05 ADOPTED	THE ARCHITECT/ENGINEER ASSUMES RESPONSIBILITY FOR APPROPRIATE USE OF THIS STANDARD.	1100S-7 3 OF 3

NOTES:

1. REFER TO THE TYPICAL SECTIONS FOR THE PROPOSED ASPHALT PAVEMENT STRUCTURE.

NUMBER	DATE	REVISION	APPROVED

STATE OF TEXAS
GREGORY C. CALKINS
111309
LICENSED
PROFESSIONAL ENGINEER
9/28/2020

Binkley & Barfield, Inc
consulting engineers
Texas Registration Number F-257

CEDAR PARK

ANDERSON MILL ROAD

STANDARD DETAILS PAVING

DESIGN BY: GCC	SCALE: N/A	
DRAWN BY: DSH		
CHECKED BY: BMB		
APPROVED BY: BDR	SHEET: 4 OF 5	
PROJECT NO: 156402		
DATE: 9/28/2020	PAGE: 155	

9/28/2020
1:25:44 PM
I:\156402*Anderson*Mill*Road\CADD\SHEETS\RDSD1*AM*04.dgn

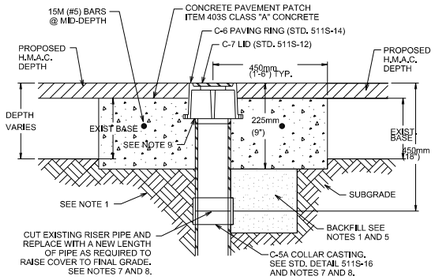

SECTION B-B

NOTES:

1. SUB-GRADE SHALL BE COMPACTED AS PER ITEM 201S, SUB-GRADE PREPARATION.
2. VALVE CASTINGS SHALL BE ADJUSTED TO GRADE AFTER FINAL LIFT OF OVERLAY IS IN PLACE.
3. CLEAN VALVE BOX OF ALL DEBRIS DOWN TO THE NUT OF THE VALVE; NUT SHALL OPERATE WITH NO OBSTRUCTION.
4. REMOVE EXISTING RISER PIPE DOWN 450mm (18") AND REPLACE TO THE NEW ELEVATION USING NEW PIPE AND A C-5A CASTING.
5. WHERE CAST IRON CASTINGS TO BE REMOVED REQUIRE EXCAVATION GREATER THAN 500mm (20") DEEP, CONTRACTOR MAY ELECT TO FILL EXCAVATION WITH CONTROLLED LOW STRENGTH MATERIAL (SPEC. ITEM 402S) TO THE UNDERSIDE OF THE CONCRETE PAVEMENT PATCH IN LIEU OF COMPACTED BACKFILL.
6. REINFORCING STEEL SHALL MEET SPEC. ITEM 406S.
7. NO MORE THAN 2 SECTIONS OF PIPE SHALL BE USED FROM VALVE TO FINAL GRADE.
8. BELL AND SPIGOT IS ACCEPTABLE FOR DEPTH OVER 5.5m (18')
9. PAVING RING SHALL SIT FLUSH ON RISER.

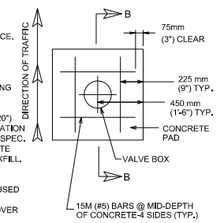

PLAN VIEW

CITY OF AUSTIN AUSTIN WATER UTILITY	WATER VALVE BOX ADJUSTMENT TO GRADE W/CONCRETE AND H.M.A.C.	
RECORD COPY SIGNED BY KATHI L FLOWERS 08/31/2011	THE ARCHITECT/ENGINEER ASSUMES RESPONSIBILITY FOR APPROPRIATE USE OF THIS STANDARD.	STANDARD NO. 511S-13B

NUMBER	DATE	REVISION	APPROVED

STATE OF TEXAS
GREGORY C. CALKINS
111309
LICENSED
PROFESSIONAL ENGINEER
9/28/2020

Binkley & Barfield, Inc
consulting engineers
Texas Registration Number F-257

CEDAR PARK

ANDERSON MILL ROAD

STANDARD DETAILS PAVING

NOTES:

1. REFER TO THE TYPICAL SECTIONS FOR THE PROPOSED ASPHALT PAVEMENT STRUCTURE.

DESIGN BY: GCC DRAWN BY: DSH CHECKED BY: BMB APPROVED BY: BDR PROJECT NO: 156402 DATE: 9/28/2020	SCALE: N/A	
	SHEET: 5 OF 5	
	PAGE: 156	

9/28/2020
1:25:47 PM
I:\156402*Anderson*Mill*Road\CADD\SHEETS\RDSD1*AM*05.dgn

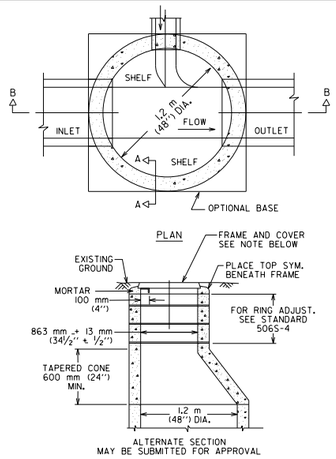

ALTERNATE SECTION
MAY BE SUBMITTED FOR APPROVAL

NOTE:
USE 800 mm (32") FRAME AND COVER.

MINIMUM MANHOLE DIA.	MINIMUM PIPE SIZE
1.2 m (4')	450 TO 600 mm (18 TO 24")
1.5 m (5')	750 mm TO 1.1 m (30 TO 42")
1.8 m (6')	1.2 TO 1.4 m (48 TO 54")
2.1 m (7')	1.5 TO 1.7 m (60 TO 66")

SIZE TO BE USED IS DEPENDENT ON DRAIN ANGLES.

CITY OF AUSTIN DEPARTMENT OF WATERSHED PROTECTION AND DEVELOPMENT REVIEW		PRE-CAST CONCRETE STORM DRAIN MANHOLE	
RECORD COPY SIGNED BY GEORGE E. OSWALD	2/14/02 ADOPTED	THE ARCHITECT/ENGINEER ASSUMES RESPONSIBILITY FOR APPROPRIATE USE OF THIS STANDARD.	STANDARD NO. 506S-3 1 OF 2

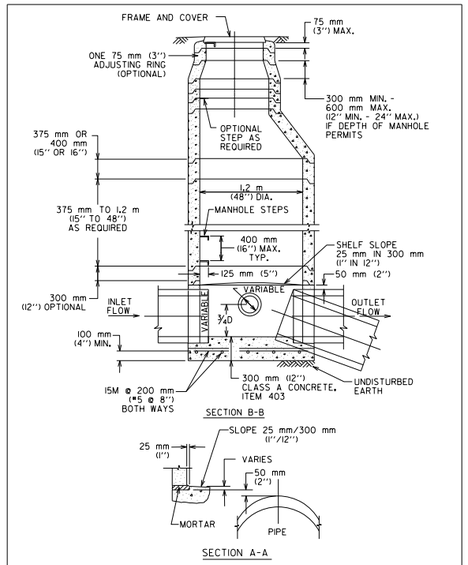

CITY OF AUSTIN DEPARTMENT OF WATERSHED PROTECTION AND DEVELOPMENT REVIEW		PRE-CAST CONCRETE STORM DRAIN MANHOLE	
RECORD COPY SIGNED BY GEORGE E. OSWALD	2/14/02 ADOPTED	THE ARCHITECT/ENGINEER ASSUMES RESPONSIBILITY FOR APPROPRIATE USE OF THIS STANDARD.	STANDARD NO. 506S-3 2 OF 2

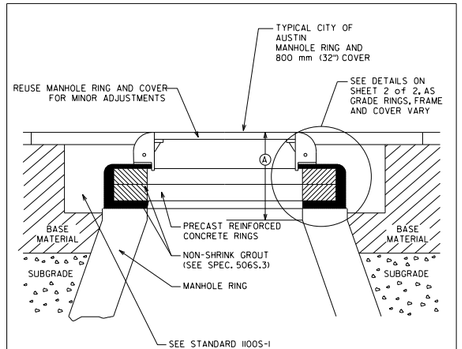

(A) VERTICAL FACE = ALLOWABLE THROAT OR CHIMNEY HEIGHT
= NEW CONSTRUCTION = 525mm = (21") Max.
= EXISTING CONSTRUCTION = 675mm (27") Max.

NOTES:
1. NON-SHRINK GROUT SHALL NOT EXCEED 25 mm (1") IN ANY DIMENSION.
2. SUB-GRADE AND BASE MATERIALS SHALL BE COMPACTED ACCORDING TO ITEMS 201S AND 210S, RESPECTIVELY, OF THE CITY OF AUSTIN STANDARD SPECIFICATIONS.
3. REFER TO STANDARD 1100S-1 FOR REPAIRS AROUND MANHOLES.
4. SEE STANDARD 506S-4A FOR HDPE RING INSTALLATION (FOR USE IN PAVED AREAS ONLY).

CITY OF AUSTIN AUSTIN WATER UTILITY		MINOR MANHOLE ADJUSTMENT & NEW MANHOLE CONSTRUCTION	
RECORD COPY SIGNED BY KATHIL FLOWERS	08/31/2011	THE ARCHITECT/ENGINEER ASSUMES RESPONSIBILITY FOR APPROPRIATE USE OF THIS STANDARD.	STANDARD NO. 506S-4 1 OF 2

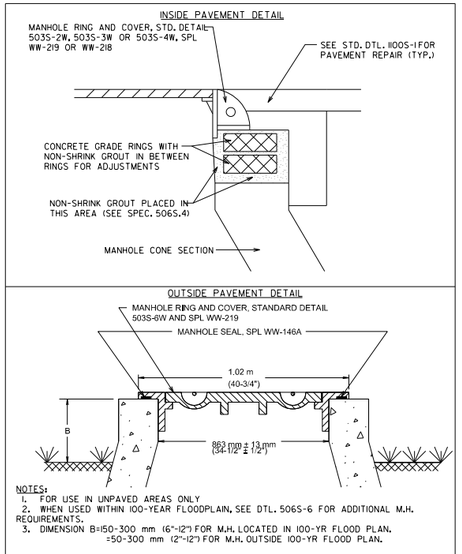

NOTES:
1. FOR USE IN UNPAVED AREAS ONLY
2. WHEN USED WITHIN 100-YEAR FLOODPLAIN, SEE DTL. 506S-6 FOR ADDITIONAL M.H. REQUIREMENTS.
3. DIMENSION B=150-300 mm (6"-12") FOR M.H. LOCATED IN 100-YR FLOOD PLAN.
=50-300 mm (2"-12") FOR M.H. OUTSIDE 100-YR FLOOD PLAN.

CITY OF AUSTIN AUSTIN WATER UTILITY		MINOR MANHOLE ADJUSTMENT & NEW MANHOLE CONSTRUCTION	
RECORD COPY SIGNED BY KATHIL FLOWERS	08/31/2011	THE ARCHITECT/ENGINEER ASSUMES RESPONSIBILITY FOR APPROPRIATE USE OF THIS STANDARD.	STANDARD NO. 506S-4 2 OF 2

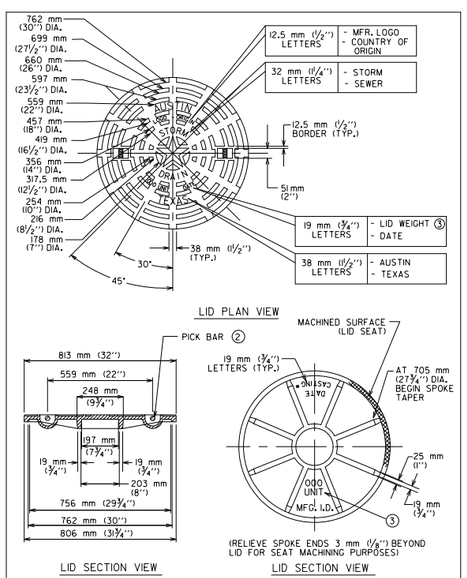

CITY OF AUSTIN DEPARTMENT OF WATERSHED PROTECTION AND DEVELOPMENT REVIEW		STORM DRAIN MANHOLE RING AND 813 mm (32") COVER	
RECORD COPY SIGNED BY GEORGE E. OSWALD	2/14/02 ADOPTED	THE ARCHITECT/ENGINEER ASSUMES RESPONSIBILITY FOR APPROPRIATE USE OF THIS STANDARD.	STANDARD NO. 503S-4S 1 OF 3

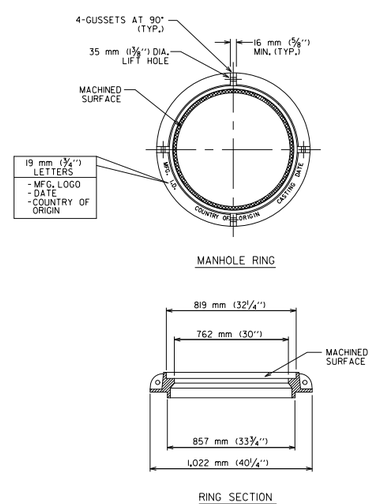

CITY OF AUSTIN DEPARTMENT OF WATERSHED PROTECTION AND DEVELOPMENT REVIEW		STORM DRAIN MANHOLE RING AND 813 mm (32") COVER	
RECORD COPY SIGNED BY GEORGE E. OSWALD	2/14/02 ADOPTED	THE ARCHITECT/ENGINEER ASSUMES RESPONSIBILITY FOR APPROPRIATE USE OF THIS STANDARD.	STANDARD NO. 503S-4S 2 OF 3

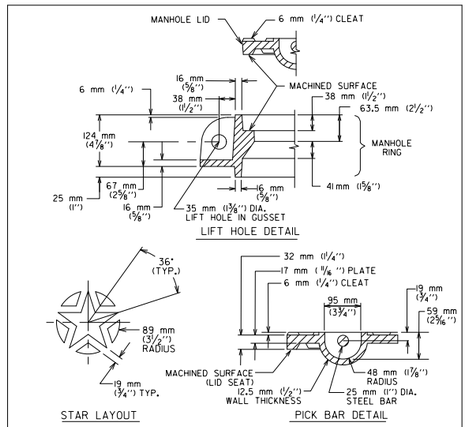

NOTES:
(1) ALL CORNERS AND EDGES SHALL HAVE A 1.5 mm (1/16") MINIMUM RADIUS.
(2) LIDS SHALL BE CAST WITH TWO 25 mm (1") DIA. STEEL PICK BARS.
(3) LID WEIGHTS SHALL BE 935 N (210 LBS.) FOR CAST IRON OR 779 N (175 LBS.) FOR DUCTILE IRON. WEIGHT SHALL BE CAST ON BOTH TOP AND BOTTOM OF LID.
(4) MANUFACTURER SHALL PROVIDE INDEPENDENT TESTING LABORATORY REPORT ON 25,000 POUND PROOF LOAD TEST CONDUCTED ACCORDING TO AASHTO M-306.
(5) FILLETS SHALL BE 6 mm (1/4") RADIUS UNLESS OTHERWISE SPECIFIED.
(6) MANUFACTURER SHALL REMOVE EXCESS IRON AND MACHINE FINISH SEATING SURFACES TO NOTED DIMENSIONS.

CITY OF AUSTIN DEPARTMENT OF WATERSHED PROTECTION AND DEVELOPMENT REVIEW		STORM DRAIN MANHOLE RING AND 813 mm (32") COVER	
RECORD COPY SIGNED BY GEORGE E. OSWALD	2/14/02 ADOPTED	THE ARCHITECT/ENGINEER ASSUMES RESPONSIBILITY FOR APPROPRIATE USE OF THIS STANDARD.	STANDARD NO. 503S-4S 3 OF 3

NOTES:

1. ALL MANHOLE AND INLET COVERS SHALL READ: "CITY OF CEDAR PARK".
2. ALL STORM MANHOLES, RINGS, AND COVERS TO BE TRAFFIC RATED.

NUMBER	DATE	REVISION	APPROVED

STATE OF TEXAS
GREGORY C. CALKINS
111309
LICENSED
PROFESSIONAL ENGINEER
9/28/2020

Binkley & Barfield, Inc
consulting engineers
Texas Registration Number F-257

CEDAR PARK

ANDERSON MILL ROAD

STANDARD DETAILS STORMWATER

DESIGN BY: GCC	SCALE: N/A	
DRAWN BY: DSH		
CHECKED BY: BMB		
APPROVED BY: BDR	SHEET: 1 OF 4	
PROJECT NO: 156402		
DATE: 9/28/2020	PAGE: 157	

9/28/2020
1:25:50 PM
I:\156402*Anderson*Mill*Road\CADD\SHEETS\DRSD1*AM*01.dgn

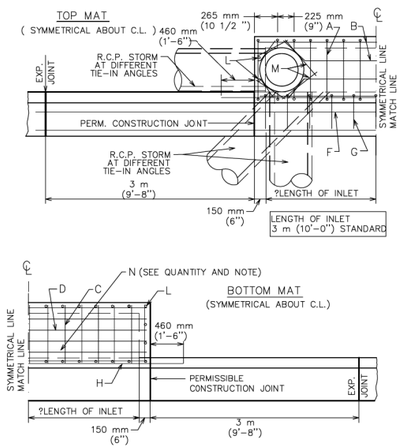

NOTE: INSTALL ALMETEK 4" DISC "NO DUMPING DRAINS TO WATERWAY" MARKER

CITY OF CEDAR PARK DEPARTMENT OF PUBLIC WORKS		TYPICAL DETAILS FOR CURB INLET	
	12/03/09 ADOPTED	THE ARCHITECT/ENGINEER ASSUMES RESPONSIBILITY FOR APPROPRIATE USE OF THIS STANDARD.	STANDARD NO. 1 OF 4

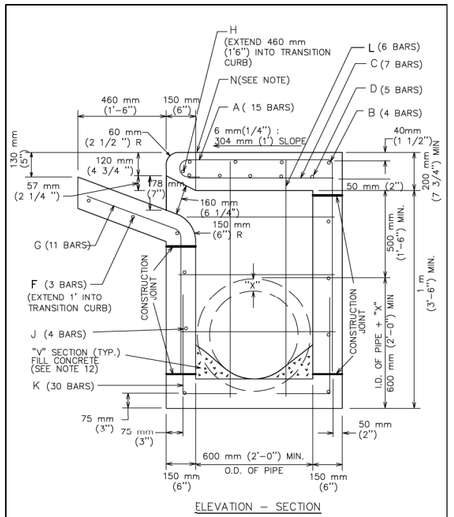

ELEVATION – SECTION

NOTE: INSTALL ALMETEK 4" DISC "NO DUMPING DRAINS TO WATERWAY" MARKER

CITY OF CEDAR PARK DEPARTMENT OF PUBLIC WORKS		TYPICAL DETAILS FOR CURB INLET	
	12/03/09 ADOPTED	THE ARCHITECT/ENGINEER ASSUMES RESPONSIBILITY FOR APPROPRIATE USE OF THIS STANDARD.	STANDARD NO. 2 OF 4

TABLE OF QUANTITIES
FOR 18" OUTLET PIPE
REINFORCING STEEL QUANTITIES

BARS	SIZE	SPACING	NUMBER	LENGTH	WEIGHT
A	4	230mm (9")*	15	2 m (7'-0")	73
B	4	250 mm (10")	4	3.25 m (10'-8")	29
C	4	460 mm (18")	7	760 mm (2'-6")	12
D	6	150 mm (6")	5	3.25 m (10'-8")	80
E	4	300 mm (12")	6	760 mm (2'-6")	10
F	4	250 mm (10")	3	4 m (13'-0")	35
G	4	300 mm (12")	11	1.25 m (4'-3")	31
H	6	–	1	4.25 m (14'-0")	20
J	4	300 mm (12")	7	3.25 m (10'-8")	50
K	4	230 mm (9")*	30	800 mm (2'-7 1/2")	52
L	4	300 mm (12")*	6	1.3 m (4'-4")	17
M	4	–	4	500 mm (1'-8") AVG	4
N	ALMETEK 4" DISC "NO DUMPING DRAINS TO WATERWAY" MARKER MODEL SD-SP, SQUARE HOLE OPTION, SYMBOL: FISH, COLOR: BLUE. USE ALMETEK SPECS FOR THEFT RESISTANT RIVET SURFACE MOUNT W/ ADHESIVE FOR DRY CONCRETE INSTALLATION.				
TOTAL STEEL, LB.					413
TOTAL CONCRETE, C.Y.					4.06

* EXCEPT AS SHOWN ON PLAN

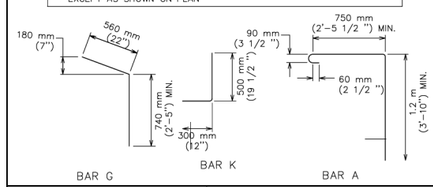

CITY OF CEDAR PARK DEPARTMENT OF PUBLIC WORKS		TYPICAL DETAILS FOR CURB INLET	
	12/03/09 ADOPTED	THE ARCHITECT/ENGINEER ASSUMES RESPONSIBILITY FOR APPROPRIATE USE OF THIS STANDARD.	STANDARD NO. 3 OF 4

NOTES:
1. ALL CONCRETE SHALL BE CLASS "A"
2. ALL REINFORCING STEEL SHALL BE GRADE 60
3. DIMENSIONS RELATING TO REINFORCING STEEL ARE TO CENTERS OF BARS.
4. VERTICAL STEEL MAY BE SPLICED (380 mm or 15" MIN. LAP) IN THE LOWER ONE-HALF OF ALL INLET WALLS.5. IN AREAS OF CONFLICT BETWEEN REINFORCING STEEL, PIPES AND MANHOLE FRAME, THE REINFORCEMENT SHALL BE BENT OR ADJUSTED TO CLEAR AS DIRECTED BY THE ENGINEER.
6. QUANTITIES SHOWN HEREON ARE FOR THE CONTRACTOR'S INFORMATION ONLY. PAYMENT WILL BE MADE FOR EACH INLET OF THE TYPE SPECIFIED, COMPLETE IN PLACE INCLUDING MANHOLE FRAME AND OVER.
7. CHAMFER ALL EXPOSED EDGES 20 mm (3/4 ").
8. MANHOLE FRAME AND COVER SHALL BE IN ACCORDANCE WITH CITY OF AUSTIN STANDARD 503S-1.
9. THE CONTRACTOR MAY PROPOSE ALTERNATE PROCEDURES FOR THE CONSTRUCTION OF INLETS, INCLUDING PRECAST UNITS. PLANS FOR SUCH PROPOSED ALTERNATES SHALL BE SUBMITTED TO THE ENGINEER FOR REVIEW AND APPROVAL BEFORE CONSTRUCTION.
10. ALL INLET WALLS SHALL BE FORMED EXCEPT WHERE THE NATURE OF THE SURROUNDING MATERIAL IS SUCH THAT IT CAN BE TRIMMED TO A SMOOTH VERTICAL FACE. WHEN INLET WALLS ARE PLACED TO NEAT EXCAVATION LINES THE WALL THICKNESS SHALL NOT EXCEED 10 INCHES.
11. PAYMENT FOR INLET AT THE CONTRACT PRICE SHALL INCLUDE THE TRANSITION CURB.
12. INVERT OF INLET SHAL. BE SLOPED 1:20 WITH FILL CONCRETE, SHAPED AS "V" SECTION
13. NO SPLICING OF REINFORCING STEEL SHALL BE PERMITTED UNLESS OTHERWISE NOTED ON THE ?LANS OR PERMITTED IN WRITING BY THE ENGINEER.
14. INSTALL ALMETEK 4" DISC "NO DUMPING DRAINS TO WATER" MARKER, MODEL SD-SP, SQUARE OPTION, SYMBOL: FISH, COLOR: BLUE. USE ALMETEK INSTALL SPECIFICATIONS FOR THEFT RESISTANT RIVET SURFACE MOUNT W/ADHESIVE FOR DRY CONCRETE INSTALL.

REFERENCES:

FOR EXPANSION JOINT DOWEL AND DOWEL LOCATION DETAILS
SEE STD. 430S-3, "CURB EXPANSION JOINT DOWEL DETAIL".

FOR 18" MANHOLE FRAME AND COVER DETAILS
SEE STD. 503S-1, "18" COVER AND FRAME".

ALMETEK "NO DUMPING DRAINS TO WATERWAY" MARKERS
WWW.ALMETEK.COM

CITY OF CEDAR PARK DEPARTMENT OF PUBLIC WORKS		TYPICAL DETAILS FOR CURB INLET	
	12/03/09 ADOPTED	THE ARCHITECT/ENGINEER ASSUMES RESPONSIBILITY FOR APPROPRIATE USE OF THIS STANDARD.	STANDARD NO. 4 OF 4

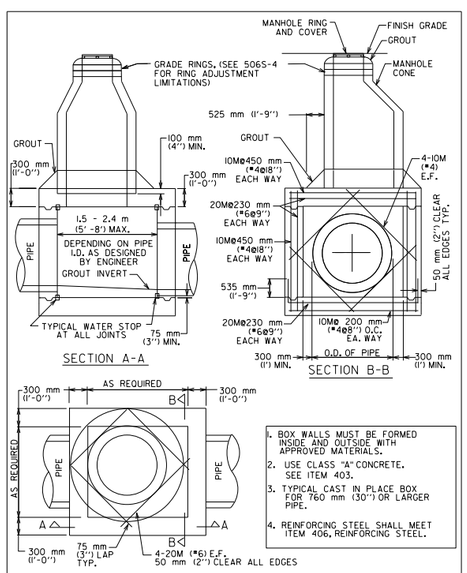

1. BOX WALLS MUST BE FORMED INSIDE AND OUTSIDE WITH APPROVED MATERIALS.
2. USE CLASS "A" CONCRETE. SEE ITEM 403.
3. TYPICAL CAST IN PLACE BOX FOR 760 mm (30") OR LARGER PIPE.
4. REINFORCING STEEL SHALL MEET ITEM 406, REINFORCING STEEL.

CITY OF AUSTIN WATER AND WASTEWATER UTILITY		TYPICAL BOX MANHOLE 760 mm (30") & LARGER PIPE	
RECORD COPY SIGNED BY KATHI L. FLOWERS	2/17/00 ADOPTED	THE ARCHITECT/ENGINEER ASSUMES RESPONSIBILITY FOR APPROPRIATE USE OF THIS STANDARD.	STANDARD NO. 506S-5

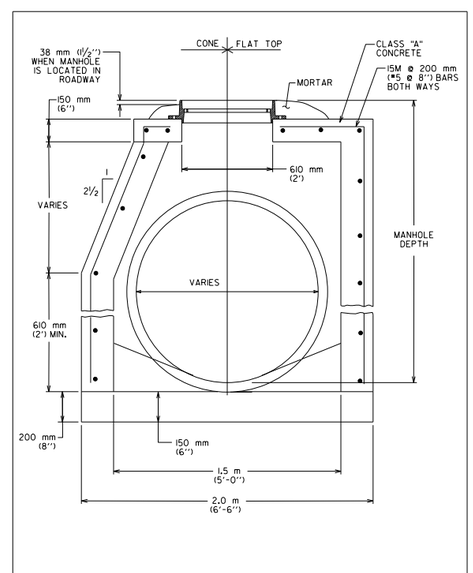

CITY OF AUSTIN DEPARTMENT OF WATERSHED PROTECTION AND DEVELOPMENT REVIEW		STORM DRAIN MANHOLE DETAIL	
RECORD COPY SIGNED BY GEORGE E. OSWALD	2/14/02 ADOPTED	THE ARCHITECT/ENGINEER ASSUMES RESPONSIBILITY FOR APPROPRIATE USE OF THIS STANDARD.	STANDARD NO. 506S-11

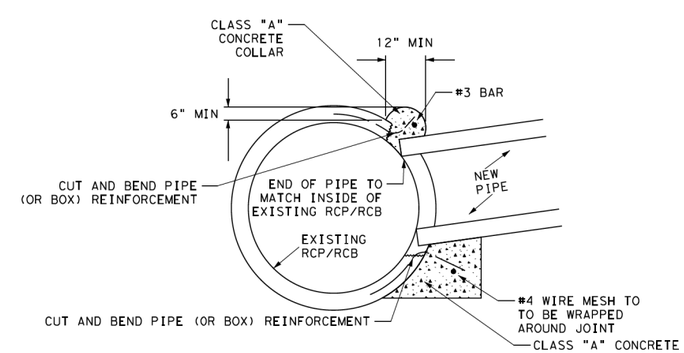

CONNECTION TO EXISTING
STORM DRAIN DETAIL
NTS

NOTES:

1. ALL MANHOLE AND INLET COVERS SHALL READ: "CITY OF CEDAR PARK".

NUMBER	DATE	REVISION	APPROVED

STATE OF TEXAS
GREGORY C. CALKINS
111309
LICENSED
PROFESSIONAL ENGINEER
9/28/2020

Binkley & Barfield, Inc
consulting engineers
Texas Registration Number F-257

CEDAR PARK

ANDERSON MILL ROAD

STANDARD DETAILS STORMWATER

DESIGN BY:	GCC	SCALE: N/A	
DRAWN BY:	DSH		
CHECKED BY:	BMB		
APPROVED BY:	BDR	SHEET: 2 OF 4	
PROJECT NO:	156402		
DATE:	9/28/2020	PAGE: 158	

9/28/2020
1:26:22 PM
I:\156402*Anderson*Mill*Road\CADD\SHEETS\DRSD1*AM*02.dgn

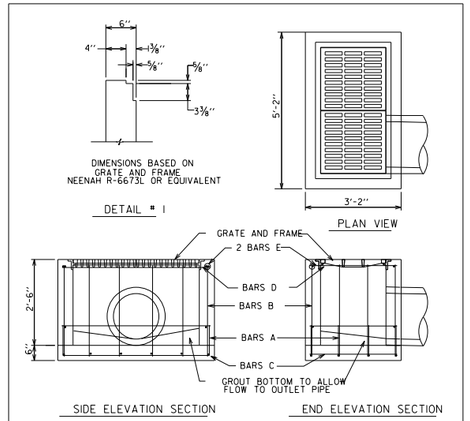

REINFORCING STEEL SCHEDULE					
BAR	QTY	SIZE	SPACING	LENGTH	WEIGHT
A	4	4	12"	6'-8"	18
B	16	4	12"	3'-0"	32
C	8	4	12"	2'-10"	15
D	4	4	12"	5'-2"	14
E	4	5	12"	2'-10"	12
TOTAL WEIGHT---91 LB.					

CITY OF AUSTIN DEPARTMENT OF WATERSHED PROTECTION AND DEVELOPMENT REVIEW		STANDARD DROP INLET	
RECORD COPY SIGNED BY ALLEN BRECHER	5/24/88 ADOPTED	THE ARCHITECT/ENGINEER ASSUMES RESPONSIBILITY FOR APPROPRIATE USE OF THIS STANDARD.	STANDARD NO. 508-11

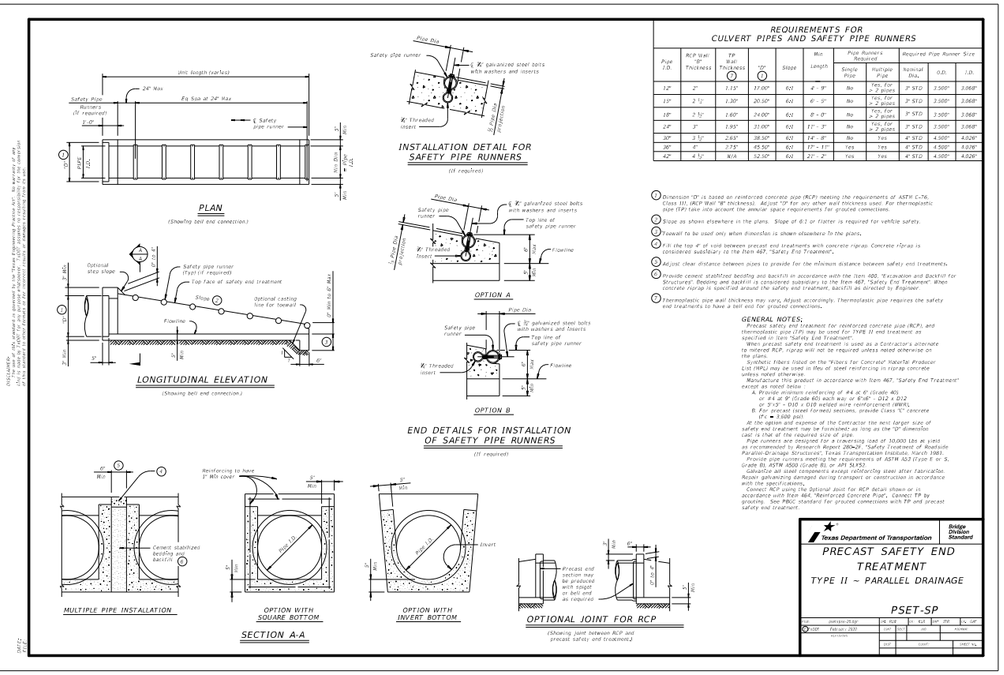

REQUIREMENTS FOR CULVERT PIPES AND SAFETY PIPE RUNNERS

Pipe I.D.	RCP Wall "D" Thickness	TP Wall Thickness (1)	"D" (2)	Slope	Min Length	Pipe Runners Required: Single Pipe	Pipe Runners Required: Multiple Pipe	Required Pipe Runner Size: Nominal Dia.	O.D.	I.D.
12"	2"	1.15"	17.00"	6:1	4' - 9"	No	Yes, for > 2 pipes	3" STD	3.500"	3.068"
15"	2 1/2"	1.30"	20.50"	6:1	6' - 3"	No	Yes, for > 2 pipes	3" STD	3.500"	3.068"
18"	2 1/2"	1.60"	24.00"	6:1	8' - 0"	No	Yes, for > 2 pipes	3" STD	3.500"	3.068"
24"	3"	1.90"	31.00"	6:1	11' - 3"	No	Yes, for > 2 pipes	3" STD	3.500"	3.068"
30"	3 1/2"	2.63"	38.50"	6:1	14' - 8"	No	Yes	4" STD	4.500"	4.026"
36"	4"	2.75"	45.50"	6:1	17' - 11"	Yes	Yes	4" STD	4.500"	4.026"
42"	4 1/2"	N/A	52.50"	6:1	21' - 2"	Yes	Yes	4" STD	4.500"	4.026"

(1) Dimension "D" is based on reinforced concrete pipe (RCP) meeting the requirements of ASTM C-76, Class III, (RCP Wall "B" thickness). Adjust "D" for any other wall thickness used. For thermoplastic pipe (TP) take into account the annular space requirements for grouted connections.

(2) Slope as shown elsewhere in the plans. Slope of 6:1 or flatter is required for vehicle safety.

(3) Headwall to be used only when dimension is shown elsewhere in the plans.

(4) Fill the top 4" of void between precast end treatments with concrete riprap. Concrete riprap is considered subsidiary to the Item 467, "Safety End Treatment".

(5) Adjust clear distance between pipes to provide for the minimum distance between safety end treatments.

(6) Provide cement stabilized bedding and backfill in accordance with the Item 400, "Excavation and Backfill for Structures". Bedding and backfill is considered subsidiary to the Item 467, "Safety End Treatment". When concrete riprap is specified around the safety end treatment, backfill as directed by Engineer.

(7) Thermoplastic pipe wall thickness may vary. Adjust accordingly. Thermoplastic pipe requires the safety end treatments to have a bell end for grouted connections.

GENERAL NOTES:

Precast safety end treatment for reinforced concrete pipe (RCP) and thermoplastic pipe (TP) may be used for TYPE II end treatment as specified in Item "Safety End Treatment".

When precast safety end treatment is used as a Contractor's alternate to inferred RCP, riprap will not be required unless noted otherwise on the plans.

Synthetic fibers listed on the "Fibers for Concrete" Material Producer List (MPL) may be used in lieu of steel reinforcing in riprap concrete unless noted otherwise.

Manufacture this product in accordance with Item 467, "Safety End Treatment" except as noted below:

A. Provide minimum reinforcing of #4 @ 6" (Grade 40) or #4 at 9" (Grade 60) each way or 6"x6" - D12 x D12 or 3"x3" - D165 x D165 welded wire reinforcement (WWR).

B. For precast (used forms) sections, provide Class "C" concrete per Item 421, "Concrete".

At the option and expense of the Contractor the next larger size of safety end treatment may be furnished as long as the "D" dimension (as) is that of the required size of pipe.

Pipe runners are designed for a crowning load of 30,000 lbs as yield as recommended in Research Report 289+2F, "Safety Treatment of Roadside Parallel-Drainage Structures", Texas Transportation Institute, March 1981.

Galvanize all steel components except reinforcing steel after fabrication. Repair galvanizing damaged during transport or construction in accordance with the specifications.

Connect RCP using the Optional Joint for RCP detail shown or in accordance with Item 464, "Reinforced Concrete Pipe". Connect TP by grouting. See PBOC standard for grouted connections with TP and precast safety end treatment.

Texas Department of Transportation — Bridge Division Standard

PRECAST SAFETY END TREATMENT

TYPE II ~ PARALLEL DRAINAGE

PSET-SP

REVISIONS						
2020	2010-2012	CK: RCR	D: GA	DW: JW	CK: JM	
1	February 2007	CHK: JM	DSN: JM			

NUMBER	DATE	REVISION	APPROVED

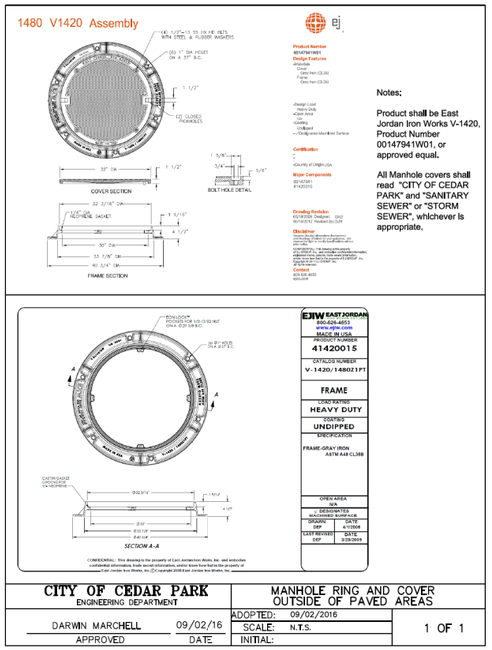

CITY OF CEDAR PARK ENGINEERING DEPARTMENT		MANHOLE RING AND COVER OUTSIDE OF PAVED AREAS	
DARWIN MARCHELL	09/02/16	ADOPTED: 09/02/2016 SCALE: N.T.S.	1 OF 1
APPROVED	DATE	INITIAL:	

NOTES:

1. ALL MANHOLE AND INLET COVERS SHALL READ: "CITY OF CEDAR PARK".

NUMBER	DATE	REVISION	APPROVED

STATE OF TEXAS
GREGORY C. CALKINS
111309
LICENSED
PROFESSIONAL ENGINEER
9/28/2020

Binkley & Barfield, Inc
consulting engineers
Texas Registration Number F-257

CEDAR PARK

ANDERSON MILL ROAD

STANDARD DETAILS STORMWATER

DESIGN BY:	GCC	SCALE: N/A	
DRAWN BY:	DSH		
CHECKED BY:	BMB		
APPROVED BY:	BDR	SHEET: 3 OF 4	
PROJECT NO:	156402		
DATE:	9/28/2020	PAGE: 159	

9/28/2020
1:26:34 PM
T:\156402*Andersonx*Mill*Road\CADD\SHEETS\DRSD1*AM*03.dgn

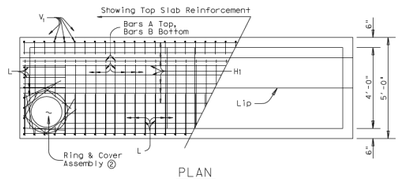

PLAN

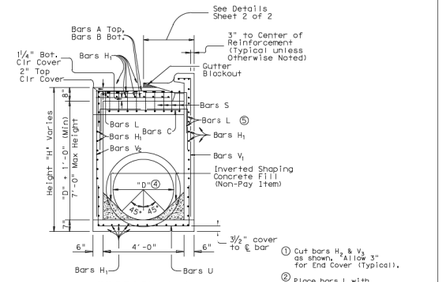

SECTION A-A

① Cut bars H_2 & V_2 as shown. Allow 3" for End Cover (Typical).

② Place bars L with Bars A, H_1 and V as shown at RCP, corners and Manhole Assembly. Place Manhole ring such that interior opening aligns with inside faces of two corner walls. Place 4 ~ #4 Bars as shown in Plan View around Ring Assembly to engage cut slab Bars A, B & H_1.

③ Cut bars H_1 and end bar U as Required to accomodate pipe inset in Bottom Slab.

④ "D" - Pipe Diameter

⑤ Align Bars L with Beam Reinforcement Bars C and Top Slab Reinforcement Bars A (12 Bars L Total) at ends of transverse slab beam.

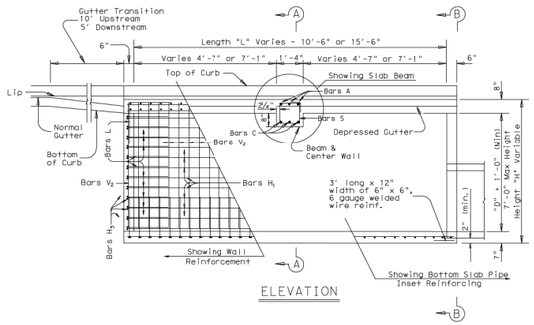

ELEVATION

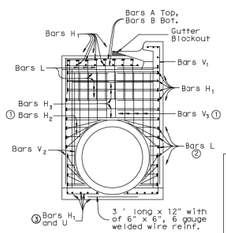

END VIEW B-B

HS20 LOADING — Sheet 1 of 2

Texas Department of Transportation
Austin District Design

CURB INLET DETAILS
TYPE IR & IIR
(FOR 36" DIA. RCP & SMALLER)
Austin District Standard

©TxDOT 2002 | DISTRICT 14 | FEDERAL AID PROJECT | SHEET
REVISIONS: 9/04 2004 Update; 10/08 Rev. Blockout Detail; 04/09 Remove Reinf. Lug
COUNTY | CONTROL | SECT | JOB | HIGHWAY

CI-TYIR-TYIR-A-09.dgn

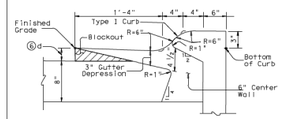

THROAT DETAILS TYPE IR INLETS

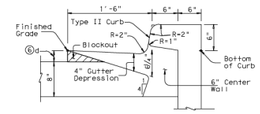

THROAT DETAILS TYPE IIR INLETS

⑥ "d" = Depth of Overlay.

BAR TABLE		
BAR	SIZE	MAX. SPA.
A	#5	5"
B	#5	5"
C	#8	As Shown
H_1	#5	6"
H_2	#5	6"
H_3	#5	6"
L	#5	6"
S	#4	5"
U	#5	6"
V_1	#5	6"
V_2	#5	6"
V_3	#5	6"
W	#5	6"

GENERAL NOTES:

Use Class "C" concrete for inlet box bottom and walls; use Class "S" concrete for inlet box top.

Ring and cover must meet requirements of AASHTO M306, "Standard Specification for Drainage Structure Castings". Materials shall conform to ASTM A48, Class 35B for gray iron castings or ASTM A536, Grade 65-45-12 for ductile iron castings. Aluminum alloy castings will not be permitted. Consider ring and cover subsidiary to the pertinent item.

If two inlets are to be installed end to end, install equivalent opening or pipe segment in end walls between boxes. Each end wall between inlet boxes will be reinforced as shown for single box.

Build inlets in stages so that base laying operations may be continuous over the top of the inlet. Backfill any additional excavation required below finished base grade within roadway limits with Class "B" Conc (Riprap).

Consider work or materials involved for inlet stage construction subsidiary to the pertinent items.

Ensure connecting pipes enter within 10 degrees of normal to inlet wall. If necessary, use pipe elbow or curved approach alignment to stay within this limit.

Provide gutter blockout(s) for the length of each inlet for temporary drainage. Fill blockout(s) after final roadway paving. Consider this work subsidiary to pertinent item.

A ~ 3'-0"
B ~ 3'-7"
C ~ 3'-8"
H_1 ~ "L" + 6"
H_2 ~ Cut to Fit
H_3 ~ 4'-6"
V_2 ~ "H" - 1'-3"
V_3 ~ Cut to Fit

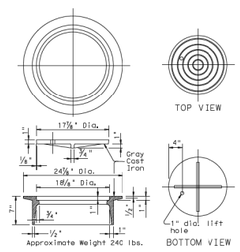

RING AND COVER DETAILS

BARS A, B, C, H_1, H_2, H_3, V_2, & V_3

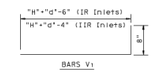

BARS V1

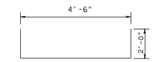

BARS U

BARS S

BARS L

HS20 LOADING — Sheet 2 of 2

Texas Department of Transportation
Austin District Design

CURB INLET DETAILS
TYPE IR & IIR
(FOR 36" DIA. RCP & SMALLER)
Austin District Standard

©TxDOT Aug. 2002 | DISTRICT 14 | FEDERAL AID PROJECT | SHEET
REVISIONS: 9/04 2004 Update; 10/08 Rev. Lip Dimension; 04/09 Remove Reinf. Lug
COUNTY | CONTROL | SECT | JOB | HIGHWAY

CI-TYIR-TYIR-A-09.dgn

NOTES:

1. ALL MANHOLE AND INLET COVERS SHALL READ: "CITY OF CEDAR PARK".

NUMBER	DATE	REVISION	APPROVED

STATE OF TEXAS
GREGORY C. CALKINS
111309
LICENSED
PROFESSIONAL ENGINEER
9/28/2020

Binkley & Barfield, Inc
consulting engineers
Texas Registration Number F-257

CEDAR PARK

ANDERSON MILL ROAD

STANDARD DETAILS STORMWATER

DESIGN BY:	GCC	SCALE: N/A	
DRAWN BY:	DSH		
CHECKED BY:	BMB		
APPROVED BY:	BDR	SHEET: 4 OF 4	
PROJECT NO:	156402		
DATE:	9/28/2020	PAGE: 160	

9/28/2020
1:26:38 PM
I:\156402*Anderson*Mill*Road\CADD\SHEETS\DRSD1*AM*04.dgn

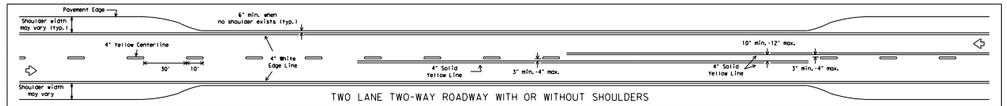

TWO LANE TWO-WAY ROADWAY WITH OR WITHOUT SHOULDERS

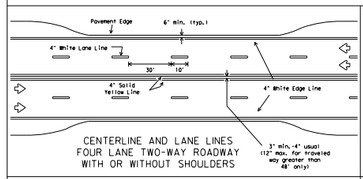

CENTERLINE AND LANE LINES FOUR LANE TWO-WAY ROADWAY WITH OR WITHOUT SHOULDERS

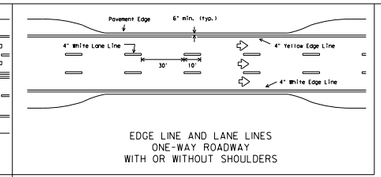

EDGE LINE AND LANE LINES ONE-WAY ROADWAY WITH OR WITHOUT SHOULDERS

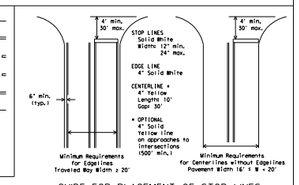

GUIDE FOR PLACEMENT OF STOP LINES, EDGE LINE & CENTERLINE

Based on Traveled Way and Pavement Widths for undivided Highways

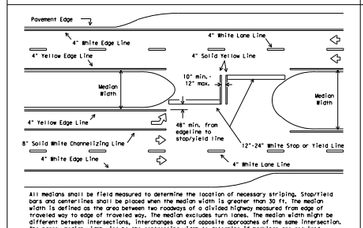

All medians shall be field measured to determine the location of necessary striping. Stop/Yield bars and centerlines shall be placed when the median width is greater than 30 ft. The median width is defined as the area between two roadways of a divided highway measured from edge of traveled way to edge of traveled way. The median excludes turn lanes. The median width might be different between intersections, interchanges and of opposite approaches of the same intersection. The narrow median width will be the controlling width to determine if markings are required.

FOUR LANE DIVIDED ROADWAY INTERSECTIONS

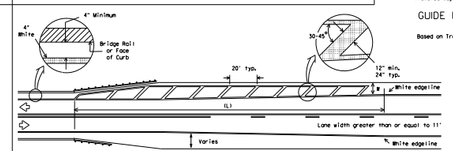

NOTES:

1. No-passing zone on bridge approach is optional but if used, it shall be a minimum 500 feet long.
2. For crosshatching length (L) see Table 1.
3. The width of the offset (W) and the required crosshatching width is the full shoulder width in advance of the bridge.
4. The crosshatching is not required if delineators or barrier reflectors are used along the structure.
5. For guard fence details, refer elsewhere in the plans.

ROADWAYS WITH REDUCED SHOULDER WIDTHS ACROSS BRIDGE OR CULVERT

TABLE 1 - TYPICAL LENGTH (L)

Posted Speed M	Formula
≤ 40	$L = \frac{WS^2}{60}$
≥ 45	L=WS

M 85th Percentile Speed may be used on roads where traffic speeds normally exceed the posted speed limit. Crosshatching length should be rounded up to nearest 5 foot increment.

L=Length of Crosshatching (ft.) S=85th or Other (ft.) Posted Speed (MPH)

EXAMPLES:

An 8 foot shoulder in advance of a bridge reduces to 4 feet on a 70 MPH roadway. The length of the crosshatching should be:

$L = 8 \times 70 = 560$ ft.

A 4 foot shoulder in advance of a bridge reduces to 2 feet on a 40 MPH roadway. The length of the crosshatching should be:

$L = 4(40)^2 / 60 = 106.67$ ft. rounded to 110 ft.

GENERAL NOTES

1. Edgeline striping shall be as shown in the plans or as directed by the Engineer. The edgeline should typically be placed a minimum of 6 inches from the edge of pavement. This distance may vary due to pavement raveling or other conditions. Edgelines are not required in curb and gutter sections of roadways.
2. The traveled way includes only that portion of the roadway used for vehicular travel and not the parking lanes, sidewalks, berms and shoulders. The traveled ways shall be measured from the inside of edgeline to inside of edgeline of a two lane roadway.

MATERIAL SPECIFICATIONS	
PAVEMENT MARKERS (REFLECTORIZED)	DMS-4200
EPOXY AND ADHESIVES	DMS-6100
BITUMINOUS ADHESIVE FOR PAVEMENT MARKERS	DMS-6130
TRAFFIC PAINT	DMS-8200
HOT APPLIED THERMOPLASTIC	DMS-8220
PERMANENT PREFABRICATED PAVEMENT MARKINGS	DMS-8240

All pavement marking materials shall meet the required Departmental Material Specifications as specified by the plans.

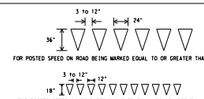

YIELD LINES

Texas Department of Transportation
Traffic Operations Division

TYPICAL STANDARD PAVEMENT MARKINGS

PM(1)-12

©TxDOT November 1978

REVISIONS	DIST	COUNTY	SHEET NO.
8-95 2-12			
5-00			
8-00			
2-03			

22A

REFLECTIVE RAISED PAVEMENT MARKERS FOR VEHICLE POSITIONING GUIDANCE

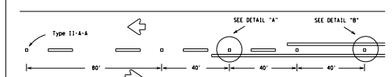

CENTERLINE FOR ALL TWO LANE ROADWAYS

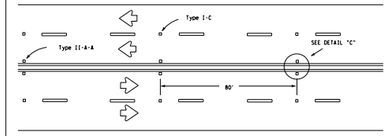

CENTERLINE & LANE LINES FOR FOUR LANE TWO-WAY HIGHWAYS

Raised pavement marker Type I-C, clear face toward normal traffic, shall be placed on 80-foot centers.

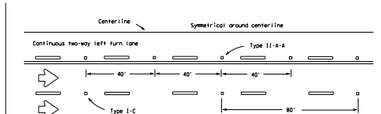

CENTERLINE AND LANE LINES FOR TWO-WAY LEFT TURN LANE

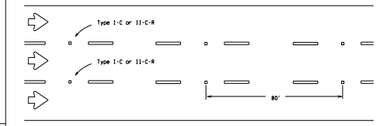

LANE LINES FOR ONE-WAY ROADWAY (NON-FREEWAY FACILITIES)

Raised pavement markers Type II-C-R shall have clear face toward normal traffic and red face toward wrong-way traffic.

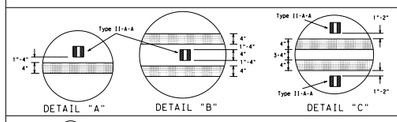

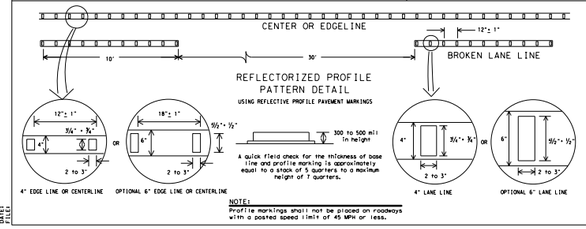

REFLECTORIZED PROFILE PATTERN DETAIL

USING REFLECTIVE PROFILE PAVEMENT MARKINGS

A quick field check for the thickness of base line and profile marking is approximately equal to a stack of 5 quarters to a maximum height of 7 quarters.

NOTE:

Profile markings shall not be placed on roadways with a posted speed limit of 45 MPH or less.

GENERAL NOTES

1. All raised pavement markers placed in broken lines shall be placed in line with and midway between the stripes.
2. On concrete pavements the raised pavement markers should be placed to one side of the longitudinal joints.

MATERIAL SPECIFICATIONS	
PAVEMENT MARKERS (REFLECTORIZED)	DMS-4200
EPOXY AND ADHESIVES	DMS-6100
BITUMINOUS ADHESIVE FOR PAVEMENT MARKERS	DMS-6130
TRAFFIC PAINT	DMS-8200
HOT APPLIED THERMOPLASTIC	DMS-8220
PERMANENT PREFABRICATED PAVEMENT MARKINGS	DMS-8240

All pavement marking materials shall meet the required Departmental Material Specifications as specified by the plans.

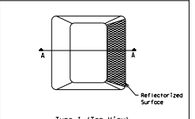

Type I (Top View)

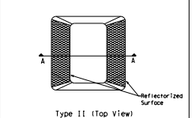

Type II (Top View)

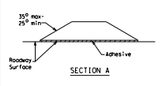

SECTION A

RAISED PAVEMENT MARKERS

Texas Department of Transportation
Traffic Operations Division

POSITION GUIDANCE USING RAISED MARKERS REFLECTORIZED PROFILE MARKINGS

PM(2)-12

©TxDOT April 1977

REVISIONS	DIST	COUNTY	SHEET NO.
4-92 2-10			
5-00 2-12			
8-00			
2-08			

22B

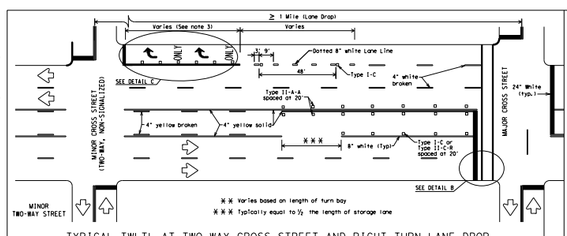

TYPICAL TWLTL AT TWO-WAY CROSS STREET AND RIGHT TURN LANE DROP

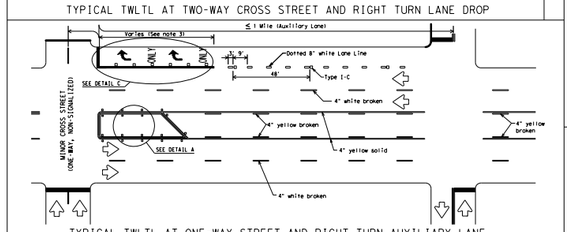

TYPICAL TWLTL AT ONE-WAY STREET AND RIGHT TURN AUXILIARY LANE

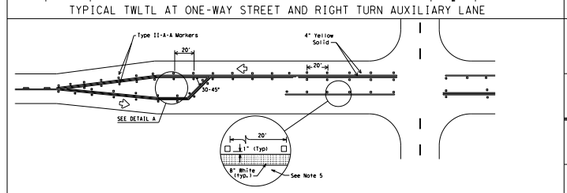

TYPICAL TWO-LANE HIGHWAY INTERSECTION WITH LEFT TURN BAYS

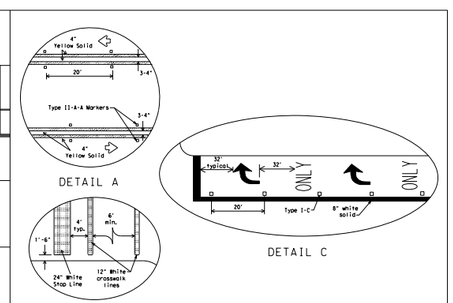

MATERIAL SPECIFICATIONS	
PAVEMENT MARKERS (REFLECTORIZED)	DMS-4200
EPOXY AND ADHESIVES	DMS-6100
BITUMINOUS ADHESIVE FOR PAVEMENT MARKERS	DMS-6130
TRAFFIC PAINT	DMS-8200
HOT APPLIED THERMOPLASTIC	DMS-8220
PERMANENT PREFABRICATED PAVEMENT MARKINGS	DMS-8240

All pavement marking materials shall meet the required Departmental Material Specifications as specified by the plans.

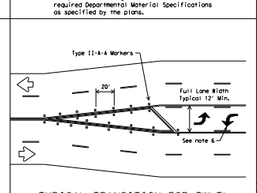

TYPICAL TRANSITION FOR TWLTL AND DIVIDED HIGHWAY

GENERAL NOTES

1. Refer elsewhere in plans for additional RPM placement and details.
2. Lane use word and arrow markings shall be used where through lanes approaching an intersection become mandatory turn lanes. Lane use word and arrow markings should be placed after the intersection of substantial length. Lane use arrow markings or word and arrow markings may be used in other lanes and turn bays for emphasis. Details for words and arrows as shown in the Standard Highway Sign Designs for Texas.
3. When lane used word and arrow markings are used, two sets of arrows should be used if the length of the bay is greater than 180 feet. When a single lane use arrow or word and arrow marking is used for a short turn lane, it should be located at or near the upstream end of the full-width turn lane.
4. Other crosswalk patterns as shown in the "Texas Manual on Uniform Traffic Control Devices" may be used.
5. Raised pavement marker Type I-C with undivided highways, flush medians and two way left turn lanes. Raised pavement marker Type II-C-R with divided highways and raised medians.
6. A two-way left-turn (TWLT) lane-use arrow pavement marking should be used at or just downstream from the beginning of a two-way left-turn lane within a corridor. Repeating the marking after each intersection or dedicated left bay is not required unless stated elsewhere in the plans.

Texas Department of Transportation
Traffic Operations Division

PAVEMENT MARKINGS FOR TWO-WAY LEFT TURN LANES DIVIDED HIGHWAYS AND RURAL LEFT TURN BAYS

PM(3)-12

©TxDOT April 1998

REVISIONS	DIST	COUNTY	SHEET NO.
5-00 2-12			
8-00			
5-03			
2-10			

22C

NUMBER	DATE	REVISION	APPROVED

STATE OF TEXAS
GREGORY C. CALKINS
111309
LICENSED
PROFESSIONAL ENGINEER
9/28/2020

Binkley & Barfield, Inc
consulting engineers
Texas Registration Number F-257

CEDAR PARK

ANDERSON MILL ROAD

STANDARD DETAILS PAVEMENT MARKINGS

DESIGN BY:	GCC	SCALE: N/A
DRAWN BY:	DSH	
CHECKED BY:	BMB	
APPROVED BY:	BDR	SHEET: 1 OF 2
PROJECT NO:	156402	
DATE:	9/28/2020	PAGE: 161

9/28/2020
1:26:43 PM
I:\156402*Anderson*Mill*Road\CADD\SHEETS\PMSD1*AM*01.dgn

TYPE "U" MOUNT PERFORATED SQUARE METAL TUBING

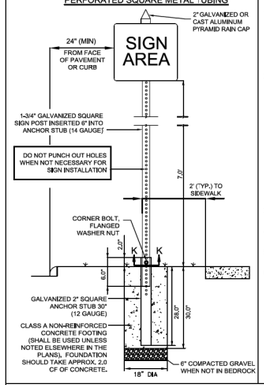

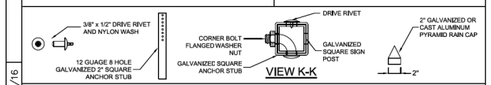

ANCHOR SYSTEM INSTALLATION PROCEDURE

1. Dig foundation hole to a minimum depth of 30", and 36" if not in bedrock.
2. Place concrete into hole until it is approximately flush with the ground. Concrete shall be Class A.
3. Insert square socket into concrete until top of socket is approximately 2" above the concrete footing.
4. Plumb the socket. Allow a minimum 4 days for concrete to set, unless otherwise directed by Engineer.
5. Attach the sign to the sign post.
6. Insert the sign post into socket and align sign face with roadway.
7. Secure post to 30" to anchor stub (12 guage).

GENERAL NOTES:

1. Except for posts, clamps, nut and bolts, all components shall be pre-qualified. A list of pre-qualified vendors may be obtained from the TxDOT Material Producer List web page. The website address is: http://www.txdot.gov/business/producerlist.htm.
2. Material used as post with this system shall conform to the following
   - 1-3/4" galvanized quick punch square post
   - 14 gauge ASTM A1011
   - 2" galvanized end cap
   - 60,000 PSI minimum yield strength
   - Wall thickness shall be ≥.083
   - Sign posts shall be manufactured from hot-dipped galvanized steel conforming to ASTM A653, G90 Structural Quality, Grade 50, Class L
3. Sign blanks shall be the sizes and shapes shown on the plans.
4. Sign anchor stub or sign post shall not be spliced.
5. The bottom of the lowest sign shall be 7'0" from finished grade.
6. Anchor stub shall be 12 gauge 8 hole 2" galvanized square tubing 30" length with the part number 795176 from Allied Tube or approved equal.
7. Pyramid rain cap shall be 2" galvanized steel or cast aluminum with the part number ARC200 from Allied Tube or approved equal.

REV. DATE: 05/04/16

CITY OF CEDAR PARK ENGINEERING DEPARTMENT		STREET NAME SIGN POLE	
DARWIN MARCHELL	05/04/16	ADOPTED: 05/04/2016 SCALE: N.T.S.	1 OF 4
APPROVED	DATE	INITIAL:	

GROUND MOUNTED STREET NAME SIGN

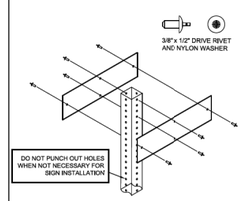

SIGN TO POLE INSTALLATION

HEIGHT	9"
LENGTH	24" MIN. 54 MAX. 6" INCREMENTS OF LENGTH
THICKNESS	0.08"

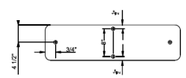

SIGN DIMENSIONS

1. Two (2) one-sided signs are required for each direction of traffic on each pole.
2. Blades shall be aluminum 6063T5 or 6063T6 alloy 0.08" thick.
3. The face of all blades shall be covered with white diamond grade sheeting with reversed screeded FHWA green transparent film. The primary, prefix, and suffix letters placed in the upper right corner.
4. Block numbers shall be provided on signs in the bottom right corner and correspond to officially approved addresses.
5. Maximum sign length is 54" If necessary, FHWA series C or B letters can be used to reduce the length of signs that would normally exceed 54". Coordinate Series C and B letters with the Engineering Department by submittal. Series D letters shall be used otherwise.
6. Letter heights and sign dimensions shall be based on the values shown on Page 3, Detail C and Sign Dimension Table on this page.
7. Use a prepared aluminum blade, which has been cleaned and all foreign material removed.
8. Letters, numbers, and spacing shall conform to the standard alphabets for highway signs, latest edition, and the latest editions of the Texas Manual on Uniform Traffic Control Devices (MUTCD) and the FHWA Standard Highway Signs and Markings (SHSM) Book, including the Standard Alphabets for Traffic Control Devices.
9. All fonts for ground mounted street name signs shall be Highway Gothic B in accordance with MUTCD guidance.
10. All street name signs are subject to approval by the Director of Engineering.
11. Use shortest reasonable length blanks in relationship to address length.

REV. DATE: 05/04/16

CITY OF CEDAR PARK ENGINEERING DEPARTMENT		STREET NAME SIGN POLE	
DARWIN MARCHELL	05/04/16	ADOPTED: 05/04/2016 SCALE: N.T.S.	2 OF 4
APPROVED	DATE	INITIAL:	

Detail A

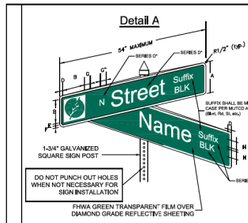

* USE FHWA STANDARD ALPHABET (HIGHWAY GOTHIC) SERIES D UNLESS SERIES C OR B LETTER ARE NECESSARY TO REDUCE THE LENGTH OF SIGNS THAT WOULD NORMALLY EXCEED 54".

Detail B

Detail C

DIMENSION*	<= 25 MPH	30-40 MPH	>= 45 MPH
SIGN BLANK (A)	6	9	9
B	4	7	7
C	3.5	5.25	5.25
D	1	1	1
E	0.375	0.5	0.5
F	0.375	0.5	0.5
G	1	2	2
H	2	3	3
I	0.5	1	1
PRIMARY LETTER	4	6	7
DIRECTION	4	6	6
SUFFIX	2	2.5	3
BLOCK NO.	2	2.5	3

*ALL DIMENSIONS ARE IN INCHES

Detail D

NO OUTLET SIGN NOTES:

1. IF "NO OUTLET" SIGNS ARE SPECIFIED ON THE PLANS, PROVIDE MUTCD STANDARD SIGN W14-3A, 24"X9" AND ATTACH ON TOP OF THE STREET NAME SIGNS.
2. TWO (2) ONE-SIDED SIGNS ARE REQUIRED (IF NECESSARY) FOR EACH DIRECTION OF TRAFFIC ON EACH POLE.

REV. DATE: 05/04/16

CITY OF CEDAR PARK ENGINEERING DEPARTMENT		STREET NAME SIGN POLE	
DARWIN MARCHELL	05/04/16	ADOPTED: 05/04/2016 SCALE: N.T.S.	3 OF 4
APPROVED	DATE	INITIAL:	

INSTALLATION OF STREET NAME SIGN

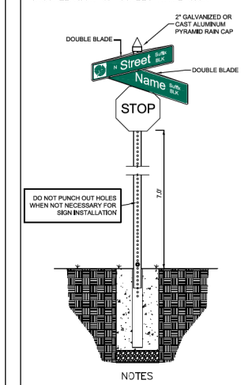

NOTES

1. TWO STREET NAME SIGNS ARE REQUIRED IF THE MAJOR STREET HAS 3 OR MORE LANES.
2. MINIMUM CLEARANCE TO BOTTOM OF LOWEST SIGN IS 7 FT. IF STREET NAME SIGNS ARE MOUNTED ON TOP OF A STOP SIGN, 7' CLEARANCE IS TO THE BOTTOM OF THE STOP SIGN.
3. ANY VARIANCE FROM THIS STANDARD MUST BE APPROVED BY THE DIRECTOR OF ENGINEERING.

INTERSECTION with SIDEWALK, CURB, and GUTTER (Typ. Residential)

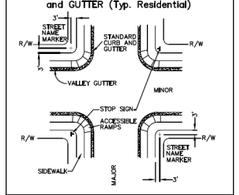

INTERSECTION with CURB and GUTTER

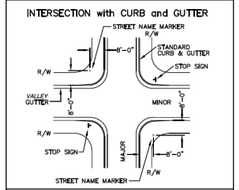

INTERSECTION with DITCHES, and NO CURB and GUTTER

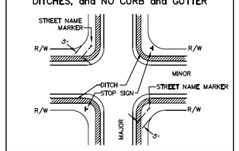

REV. DATE: 05/04/16

CITY OF CEDAR PARK ENGINEERING DEPARTMENT		STREET NAME SIGN POLE	
DARWIN MARCHELL	05/04/16	ADOPTED: 05/04/2016 SCALE: N.T.S.	4 OF 4
APPROVED	DATE	INITIAL:	

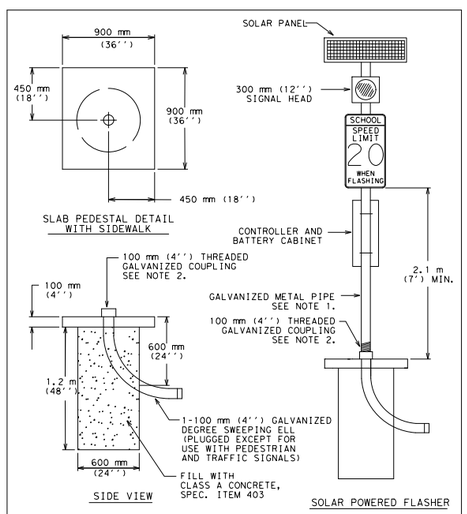

NOTES:

1. 4.5 m X 100 mm (15' X 4'') RIGID INTERMEDIATE GALVANIZED METAL PIPE 106 mm(4 1/4'') NOMINAL I.D. WITH 3 mm (1/8'') WALL THICKNESS, 13 KG (6 LBS) PER FOOT.
2. ENSURE COUPLING IS LEVEL AND PLUMB AND EXTENDS ABOVE THE SURFACE.

CITY OF AUSTIN DEPARTMENT OF PUBLIC WORKS		SOLAR POWERED FLASHER ASSEMBLY	
RECORD COPY SIGNED BY LEON BARBA	9/17/01	THE ARCHITECT/ENGINEER ASSUMES RESPONSIBILITY FOR APPROPRIATE USE OF THIS STANDARD.	STANDARD NO. 831S-2
ADOPTED			

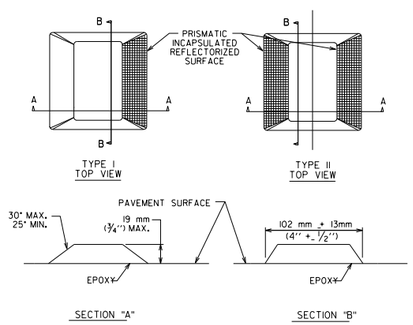

NOTE:

MINIMUM AREA OF MARKER EXPOSED TO TRAFFIC SHALL NOTE BE LESS THAN 8000 SQUARE MILLIMETERS (12.5 SQUARE INCHES).

CITY OF AUSTIN DEPARTMENT OF PUBLIC WORKS		PAVEMENT MARKERS (REFLECTORIZED - TYPE I & II)	
RECORD COPY SIGNED BY LINO RIVERA	9/29/99	THE ARCHITECT/ENGINEER ASSUMES RESPONSIBILITY FOR APPROPRIATE USE OF THIS STANDARD.	STANDARD NO. 863S-1
ADOPTED			

NUMBER	DATE	REVISION	APPROVED

STATE OF TEXAS
GREGORY C. CALKINS
111309
LICENSED
PROFESSIONAL ENGINEER
9/28/2020

Binkley & Barfield, Inc
consulting engineers
Texas Registration Number F-257

CEDAR PARK

ANDERSON MILL ROAD

STANDARD DETAILS PAVEMENT MARKINGS

DESIGN BY:	GCC	SCALE: N/A
DRAWN BY:	DSH	
CHECKED BY:	BMB	
APPROVED BY:	BDR	SHEET: 2 OF 2
PROJECT NO:	156402	
DATE:	9/28/2020	PAGE: 162

9/28/2020
1:26:51 PM
I:\156402*Anderson*Mill*Road\CADD\SHEETS\PMSD1*AM*02.dgn

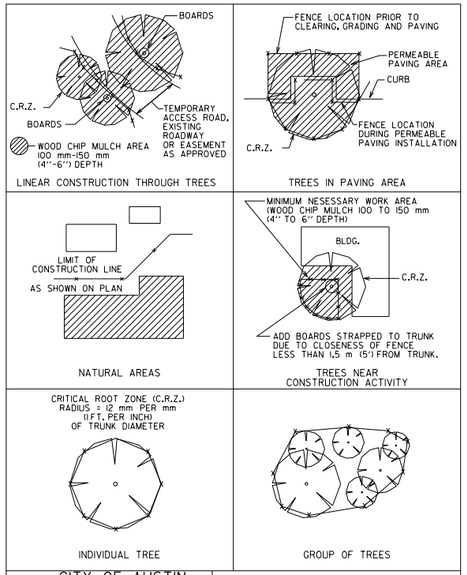

CITY OF AUSTIN WATERSHED PROTECTION DEPARTMENT		TREE PROTECTION FENCE LOCATIONS	
RECORD COPY SIGNED BY J. PATRICK MURPHY	11/15/99 ADOPTED	THE ARCHITECT/ENGINEER ASSUMES RESPONSIBILITY FOR APPROPRIATE USE OF THIS STANDARD.	STANDARD NO. 610S-1

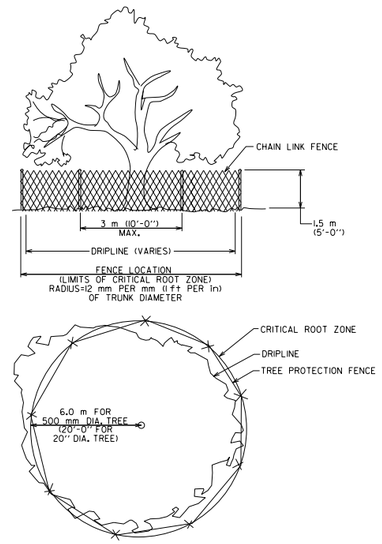

CITY OF AUSTIN WATERSHED PROTECTION DEPARTMENT		TREE PROPTECTION FENCE TYPE A - CHAIN LINK	
RECORD COPY SIGNED BY J. PATRICK MURPHY	11/15/99 ADOPTED	THE ARCHITECT/ENGINEER ASSUMES RESPONSIBILITY FOR APPROPRIATE USE OF THIS STANDARD.	STANDARD NO. 610S-2

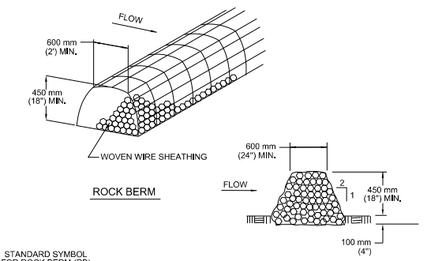

STANDARD SYMBOL FOR ROCK BERM (RB)

RB

NOTES:

1. USE ONLY OPEN GRADED ROCK 75 to 125 mm (3 to 5") DIAMETER FOR ALL CONDITIONS.
2. THE ROCK BERM SHALL BE SECURED WITH A WOVEN WIRE SHEATHING HAVING MAXIMUM 25 mm (1") OPENING AND MINIMUM WIRE DIAMETER OF 12.9 mm (20 GAUGE).
3. THE ROCK BERM SHALL BE INSPECTED DAILY OR AFTER EACH RAIN, AND THE STONE AND/OR FABRIC CORE-WOVEN SHEATHING SHALL BE REPLACED WHEN THE STRUCTURE CEASES TO FUNCTION AS INTENDED, DUE TO SEDIMENT ACCUMULATION AMONG THE ROCKS, WASHOUT, CONSTRUCTION TRAFFIC DAMAGE, ETC.
4. IF SEDIMENT REACHES A DEPTH EQUAL TO ONE-THIRD THE HEIGHT OF THE BERM OR 150 mm (6"), WHICHEVER IS LESS, THE SEDIMENT SHALL BE REMOVED AND DISPOSED OF ON AN APPROVED SITE AND IN A MANNER THAT WILL NOT CREATE A SEDIMENTION PROBLEM.
5. WHEN THE SITE IS COMPLETELY STABILIZED,THE BERM AND ACCUMULATED SEDIMENT SHALL BE REMOVED AND DISPOSED OF IN AN APPROVED MANNER.

CITY OF AUSTIN WATERSHED PROTECTION DEPARTMENT		ROCK BERM	
RECORD COPY SIGNED BY MORGAN BYARS	8/24/2010 ADOPTED	THE ARCHITECT/ENGINEER ASSUMES RESPONSIBILITY FOR APPROPRIATE USE OF THIS STANDARD.	STANDARD NO. 639S-1

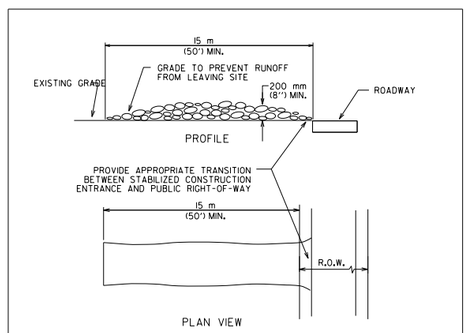

NOTES:

1. STONE SIZE: 75-125 mm (3-5") OPEN GRADED ROCK.
2. LENGTH: AS EFFECTIVE BUT NOT LESS THAN 15 m (50').
3. THICKNESS: NOT LESS THAN 200 mm (8").
4. WIDTH: NOT LESS THAN FULL WIDTH OF ALL POINTS OF INGRESS/EGRESS.
5. WASHING: WHEN NECESSARY, VEHICLE WHEELS SHALL BE CLEANED TO REMOVE SEDIMENT PRIOR TO ENTRANCE ONTO PUBLIC ROADWAY. WHEN WASHING IS REQUIRED, IT SHALL BE DONE ON AN AREA STABILIZED WITH CRUSHED STONE AND DRAINS INTO AN APPROVED TRAP OR SEDIMENT BASIN. ALL SEDIMENT SHALL BE PREVENTED FROM ENTERING ANY STORM DRAIN, DITCH OR WATERCOURSE USING APPROVED METHODS.
6. MAINTENANCE: THE ENTRANCE SHALL BE MAINTAINED IN A CONDITION THAT WILL PREVENT TRACKING OR FLOWING OF SEDIMENT ONTO PUBLIC ROADWAY. THIS MAY REQUIRE PERIODIC TOP DRESSING WITH ADDITIONAL STONE AS CONDITIONS DEMAND, AS WELL AS REPAIR AND CLEAN OUT OF ANY MEASURE DEVICES USED TO TRAP SEDIMENT. ALL SEDIMENTS THAT IS SPILLED, DROPPED, WASHED OR TRACKED ONTO PUBLIC ROADWAY MUST BE REMOVED IMMEDIATELY.
7. DRAINAGE: ENTRANCE MUST BE PROPERLY GRADED OR INCORPORATE A DRAINAGE SWALE TO PREVENT RUNOFF FROM LEAVING THE CONSTRUCTION SITE.

CITY OF AUSTIN WATERSHED PROTECTION DEPARTMENT		STABILIZED CONSTRUCTION ENTRANCE	
RECORD COPY SIGNED BY J. PATRICK MURPHY	5/23/00 ADOPTED	THE ARCHITECT/ENGINEER ASSUMES RESPONSIBILITY FOR APPROPRIATE USE OF THIS STANDARD.	STANDARD NO. 641S-1

NUMBER	DATE	REVISION	APPROVED

STATE OF TEXAS
GREGORY C. CALKINS
111309
LICENSED
PROFESSIONAL ENGINEER
9/28/2020

Binkley & Barfield, Inc
consulting engineers
Texas Registration Number F-257

CEDAR PARK

ANDERSON MILL ROAD

STANDARD DETAILS ENVIRONMENTAL

DESIGN BY:	GCC	SCALE:	N/A
DRAWN BY:	DSH		
CHECKED BY:	BMB		
APPROVED BY:	BDR	SHEET:	1 OF 2
PROJECT NO:	156402		
DATE:	9/28/2020	PAGE:	163

9/28/2020
1:26:58 PM
T:\156402*Anderson*Mill*Road\CADD\SHEETS\EVSD1*AM*01.dgn

DISCLAIMER:
"This standard is governed by the "Texas Engineering Practice Act". No warranty of any kind is made by TxDOT for any purpose whatsoever. TxDOT assumes no responsibility for the conversion of this standard to other formats or for incorrect results or damages resulting from its use.

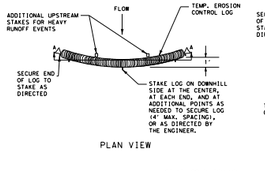

PLAN VIEW

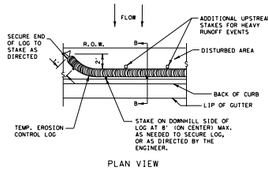

PLAN VIEW

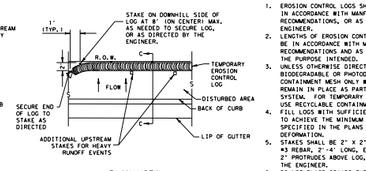

PLAN VIEW

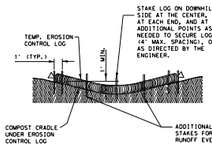

SECTION A-A

EROSION CONTROL LOG DAM

(CL-D)

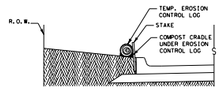

SECTION B-B

EROSION CONTROL LOG AT BACK OF CURB

(CL-BOC)

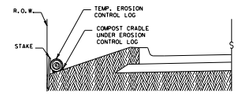

SECTION C-C

EROSION CONTROL LOG AT EDGE OF RIGHT-OF-WAY

(CL-ROW)

GENERAL NOTES:

1. EROSION CONTROL LOGS SHALL BE INSTALLED IN ACCORDANCE WITH MANUFACTURER'S RECOMMENDATIONS, OR AS DIRECTED BY THE ENGINEER.
2. LENGTHS OF EROSION CONTROL LOGS SHALL BE IN ACCORDANCE WITH MANUFACTURER'S RECOMMENDATIONS AND AS REQUIRED FOR THE PURPOSE INTENDED.
3. UNLESS OTHERWISE DIRECTED, USE BIODEGRADABLE OR PHOTODEGRADABLE CONTAINMENT MESH ONLY WHERE LOG WILL REMAIN IN PLACE AS PART OF A VEGETATIVE SYSTEM. FOR TEMPORARY INSTALLATIONS, USE RECYCLABLE CONTAINMENT MESH.
4. FILL LOGS WITH SUFFICIENT FILTER MATERIAL TO ACHIEVE THE MINIMUM COMPACTED DIAMETER SPECIFIED IN THE PLANS WITHOUT EXCESSIVE DEFORMATION.
5. STAKES SHALL BE 2" X 2" WOOD OR #3 REBAR, 2'-4' LONG, EMBEDDED SUCH THAT 2" PROTRUDES ABOVE LOG, OR AS DIRECTED BY THE ENGINEER.
6. DO NOT PLACE STAKES THROUGH CONTAINMENT MESH.
7. COMPOST CRADLE MATERIAL IS INCIDENTAL & WILL NOT BE PAID FOR SEPARATELY.
8. SANDBAGS USED AS ANCHORS SHALL BE PLACED ON TOP OF LOGS & SHALL BE OF SUFFICIENT SIZE TO HOLD LOGS IN PLACE.
9. TURN THE ENDS OF EACH ROW OF LOGS UPSLOPE TO PREVENT RUNOFF FROM FLOWING AROUND THE LOG.
10. FOR HEAVY RUNOFF EVENTS, ADDITIONAL UPSTREAM STAKES MAY BE NECESSARY TO KEEP LOG FROM FOLDING IN ON ITSELF.

LEGEND

- (CL-D) EROSION CONTROL LOG DAM
- (CL-BOC) EROSION CONTROL LOG AT BACK OF CURB
- (CL-ROW) EROSION CONTROL LOG AT EDGE OF RIGHT-OF-WAY
- (CL-SST) EROSION CONTROL LOGS ON SLOPES STAKE AND TRENCHING ANCHORING
- (CL-SSL) EROSION CONTROL LOGS ON SLOPES STAKE AND LASHING ANCHORING
- (CL-DI) EROSION CONTROL LOG AT DROP INLET
- (CL-CI) EROSION CONTROL LOG AT CURB INLET
- (CL-GI) EROSION CONTROL LOG AT CURB & GRATE INLET

REBAR STAKE DETAIL

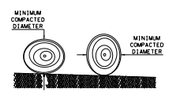

DIAMETER MEASUREMENTS OF EROSION CONTROL LOGS SPECIFIED IN PLANS

SEDIMENT BASIN & TRAP USAGE GUIDELINES

An erosion control log sediment trap may be used to filter sediment out of runoff draining from an unstabilized area.

Log Traps: The drainage area for a sediment trap should not exceed 5 acres. The trap capacity should be 1800 CF/acre (0.5" over the drainage area).

Control logs should be placed in the following locations:
1. Within drainage ditches spaced as needed or min. 500' on center
2. Immediately preceding ditch inlets or drain inlets
3. Just before the drainage enters a water course
4. Just before the drainage leaves the right of way
5. Just before the drainage leaves the construction limits where drainage flows away from the project.

The logs should be cleaned when the sediment has accumulated to a depth of 1/2 the log diameter.

Cleaning and removal of accumulated sediment deposits is incidental and will not be paid for separately.

SHEET 1 OF 3

Texas Department of Transportation — Design Division Standard

TEMPORARY EROSION, SEDIMENT AND WATER POLLUTION CONTROL MEASURES

EROSION CONTROL LOG

EC(9)-16

FILE: ec916	DN:TxDOT	CK:RW	DW:LS/PT	CK:LS
©TxDOT: JULY 2016	CONT	SECT	JOB	HIGHWAY
REVISIONS				
	DIST		COUNTY	SHEET NO.

DATE FILED

DISCLAIMER:
"This standard is governed by the "Texas Engineering Practice Act". No warranty of any kind is made by TxDOT for any purpose whatsoever. TxDOT assumes no responsibility for the conversion of this standard to other formats or for incorrect results or damages resulting from its use.

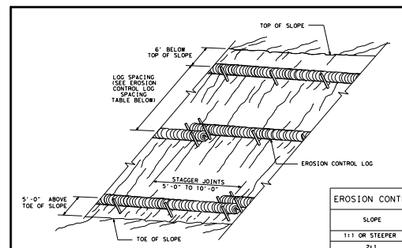

EROSION CONTROL LOGS ON SLOPES
STAKE AND TRENCHING ANCHORING

(CL-SST)

END SECTION RAP DETAIL

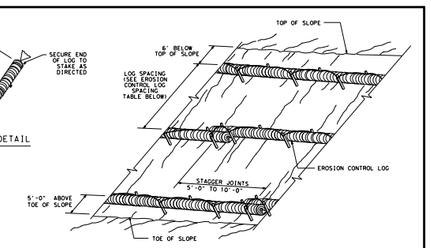

EROSION CONTROL LOGS ON SLOPES
STAKE AND LASHING ANCHORING

(CL-SSL)

EROSION CONTROL LOG SPACING TABLE				
SLOPE	LOG DIAMETER			
	6"	8"	12"	18"
1:1 OR STEEPER	5'	10'	15'	20'
2:1	10'	20'	30'	40'
3:1	15'	30'	45'	60'
4:1 OR FLATTER	20'	40'	60'	80'

* ADJUSTMENTS CAN BE MADE FOR SOIL TYPE: SOFT, LOAMY SOILS-ADJUST ROWS CLOSER TOGETHER; HARD, ROCKY SOILS- ADJUST ROWS FARTHER APART

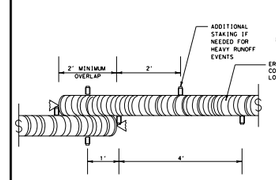

STAKE AND TRENCHING ANCHORING DETAIL

(CL-SST)

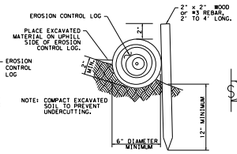

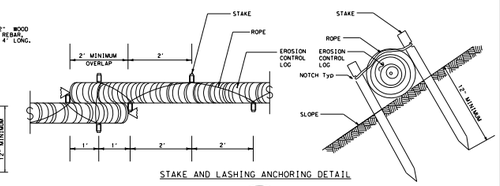

STAKE AND LASHING ANCHORING DETAIL

(CL-SSL)

STAKE NOTCH DETAIL

TRENCH DEPTH TABLE	
LOG DIAMETER	DEPTH
6"	2"
8"	3"
12"	4"
18"	5"

SHEET 2 OF 3

Texas Department of Transportation — Design Division Standard

TEMPORARY EROSION, SEDIMENT AND WATER POLLUTION CONTROL MEASURES

EROSION CONTROL LOG

EC(9)-16

FILE: ec916	DN:TxDOT	CK:RW	DW:LS/PT	CK:LS
©TxDOT: JULY 2016	CONT	SECT	JOB	HIGHWAY
REVISIONS				
	DIST		COUNTY	SHEET NO.

DATE FILED

DISCLAIMER:
"This standard is governed by the "Texas Engineering Practice Act". No warranty of any kind is made by TxDOT for any purpose whatsoever. TxDOT assumes no responsibility for the conversion of this standard to other formats or for incorrect results or damages resulting from its use.

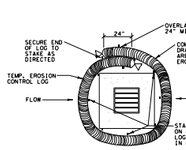

EROSION CONTROL LOG AT DROP INLET

(CL-DI)

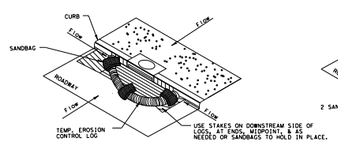

EROSION CONTROL LOG AT CURB INLET

(CL-CI)

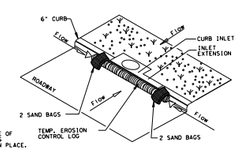

EROSION CONTROL LOG AT CURB INLET

(CL-CI)

NOTE:
EROSION CONTROL LOGS USED AT CURB INLETS SHOULD ONLY BE USED IF THEY WILL NOT IMPEDE TRAFFIC OR FLOOD THE ROADWAY OR WHEN THE STORM SEWER SYSTEM IS NOT FULLY FUNCTIONAL.

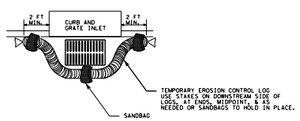

EROSION CONTROL LOG AT CURB & GRADE INLET

(CL-GI)

SECTION B-B

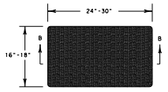

SANDBAG DETAIL

SHEET 3 OF 3

Texas Department of Transportation — Design Division Standard

TEMPORARY EROSION, SEDIMENT AND WATER POLLUTION CONTROL MEASURES

EROSION CONTROL LOG

EC(9)-16

FILE: ec916	DN:TxDOT	CK:RW	DW:LS/PT	CK:LS
©TxDOT: JULY 2016	CONT	SECT	JOB	HIGHWAY
REVISIONS				
	DIST		COUNTY	SHEET NO.

DATE FILED

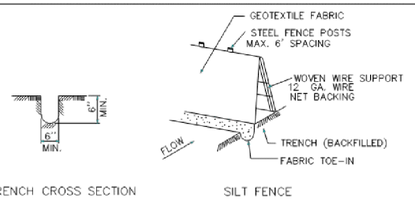

TRENCH CROSS SECTION

SILT FENCE

GENERAL NOTES:

1. SILT FENCE LOCATED ADJACENT TO PLAYGROUNDS, PARKS, SIDEWALKS, AND OTHER LOCATIONS AS DETERMINED BY CITY OF CEDAR PARK REPRESENTATIVES SHALL HAVE CITY APPROVED SAFETY CAPS ON ALL STEEL POSTS.

2. STEEL POSTS WHICH SUPPORT THE SILT FENCE SHALL BE INSTALLED ON A SLIGHT ANGLE TOWARD THE ANTICIPATED RUNOFF SOURCE.

3. POST MUST BE EMBEDDED A MINIMUM OF ONE FOOT. THE TOE OF THE SILT FENCE SHALL BE TRENCHED IN WITH A SPADE OR MECHANICAL TRENCHER, SO THAT THE DOWNSLOPE FACE OF THE TRENCH IS FLAT AND PERPENDICULAR TO THE LINE OF FLOW.

4. WHERE FENCE CAN NOT BE TRENCHED IN (E.G. PAVEMENT) WEIGHT FABRIC FLAP WITH WASHED GRAVEL ON UPHILL SIDE TO PREVENT FLOW UNDER FENCE. 6 INCHES DEEP AND 6 INCHES WIDE TO THE TRENCH MUST BE A MINIMUM OF ALLOW FOR THE SILT FENCE FABRIC TO BE LAID IN THE GROUND AND BACKFILLED WITH COMPACTED MATERIAL.

5. SILT FENCE SHOULD BE SECURELY FASTENED TO EACH STEEL SUPPORT POST OR TO WOVEN WIRE, WHICH IS IN TURN ATTACHED TO THE STEEL FENCE POST.

6. INSPECTION SHALL BE MADE WEEKLY OR AFTER EACH RAINFALL EVENT AND REPAIR OR REPLACEMENT SHALL BE MADE PROMPTLY AS NEEDED.

7. SILT FENCE SHALL BE REMOVED WHEN THE SITE IS COMPLETELY STABILIZED SO AS NOT TO BLOCK OR IMPEDE STORM FLOW OR DRAINAGE. ACCUMULATED SILT SHALL BE REMOVED WHEN IT REACHES A DEPTH OF 6 INCHES.

8. THE SILT SHALL BE DISPOSED OF IN AN APPROVED SITE AND IN SUCH A MANNER AS TO NOT CONTRIBUTE TO ADDITIONAL SILTATION.

STANDARD SYMBOL SF-L=

REV. DATE: 09/13/01

CITY OF CEDAR PARK ENGINEERING DEPARTMENT	SILT FENCE	
DARWIN MARCHELL 09/13/2001	ADOPTED: 09/13/2001	
APPROVED DATE	SCALE: N.T.S.	
	INITIAL:	

NUMBER	DATE	REVISION	APPROVED

STATE OF TEXAS
GREGORY C. CALKINS
111309
LICENSED
PROFESSIONAL ENGINEER

9/28/2020

Binkley & Barfield, Inc
consulting engineers
Texas Registration Number F-257

CEDAR PARK

ANDERSON MILL ROAD

STANDARD DETAILS ENVIRONMENTAL

DESIGN BY:	GCC	SCALE:	N/A
DRAWN BY:	DSH		
CHECKED BY:	BMB		
APPROVED BY:	BDR	SHEET:	2 OF 2
PROJECT NO:	156402		
DATE:	9/28/2020	PAGE:	164

9/28/2020
1:27:02 PM
I:\156402*Anderson*Mill*Road\CADD\SHEETS\EVSD1*AM*02.dgn

DISCLAIMER:
The use of this standard is governed by the "Texas Engineering Practice Act". No warranty of any kind is made by TxDOT for any purpose whatsoever. TxDOT assumes no responsibility for the conversion of this standard to other formats or for incorrect results or damages resulting from its use.

GENERAL NOTES FOR ALL ELECTRICAL WORK

1. The location of all conduits, junction boxes, ground boxes, and electrical services is diagrammatic and may be shifted to accommodate field conditions.

2. Provide new and unused materials. Ensure that all materials and installations comply with the applicable articles of the National Electrical Code (NEC), TxDOT standards and specifications, National Electrical Manufacturers Association (NEMA), and are listed by Underwriters Laboratories (UL) or a Nationally Recognized Testing Lab (NRTL). NRTLs such as Canadian Standard Association (CSA), Intertek Testing Services NA Inc., or FM Approvals LLC can be considered equivalent to UL. Where reference is made to NEMA listed devices, International Electrotechnical Commission (IEC) listed devices will not be considered an acceptable equal to a NEMA listed device. Acceptable devices may have both a NEMA and IEC listing. Faulty fabrication or poor workmanship in any material, equipment, or installation is justification for rejection. Replace or reinstall rejected material or equipment at no additional cost to the Department.

3. Miscellaneous nuts, bolts and hardware, except for high strength bolts, may be stainless steel when plans specify galvanized, provided the bolt size is ½ in. or less in diameter.

4. Provide the following test equipment as required by the Engineer to confirm compliance with the contract and the NEC: voltmeter, ammeter, megohm meter (1000 volt DC), ground resistance tester, torque wrenches, and torque screwdrivers. Ensure all equipment has been properly calibrated within the last year. Provide calibration certification to the Engineer upon request. Operate test equipment during inspection as requested by the Engineer.

5. Install grounding as shown on the plans and in accordance with the NEC. Ensure all metallic conduits; metal poles; luminaires; and metal enclosures are bonded to the equipment grounding conductor. Provide stranded bare copper or green insulated grounding conductors. Ground rods, connectors, and bonding jumpers are subsidiary to the various bid items.

6. When required by the Engineer, notify the Department in writing of materials from the Material Producers List (MPL) intended for use on each project. Prequalified materials are listed on the MPL on TxDOT's website under "Roadway Illumination and Electrical Supplies." No substitutions will be allowed for materials on this list.

CONDUIT

A. MATERIALS

1. Provide conduit, junction boxes, fittings, and hardware as per TxDOT Departmental Material Specification (DMS) 11030 "Conduit" and Item 618 "Conduit" of TxDOT's "Standard Specifications For Construction And Maintenance Of Highways, Streets, And Bridges," latest edition. Provide conduits listed under Item 618 on the MPL under "Roadway Illumination and Electrical Supplies." Provide conduit types according to the descriptive code or as shown on the plans. Do not substitute other types of conduits for those shown. Provide liquidtight flexible metal conduit (LFMC) when flexible conduit is called for on galvanized steel rigid metallic conduit (RMC) systems. Provide liquidtight flexible nonmetallic conduit (LFNC) when flexible conduit is called for on polyvinyl chloride (PVC) systems.

2. Provide galvanized steel RMC for all exposed conduits, unless otherwise shown on the plans. Properly bond all metal conduits.

3. Unless otherwise shown on the plans, provide junction boxes with a minimum size as shown in the following table, which applies to the greatest number of conductors entering the box through one conduit with no more than four conduits per box. When a mixture of conductor sizes is present, count the conductors as if all are of the larger size. For situations not applicable to the table, size junction boxes in accordance with NEC.

AWG	3 CONDUCTORS	5 CONDUCTORS	7 CONDUCTORS
#1	10" x 10" x 4"	12" x 12" x 4"	16" x 16" x 4"
#2	8" x 8" x 4"	10" x 10" x 4"	12" x 12" x 4"
#4	8" x 8" x 4"	10" x 10" x 4"	10" x 10" x 4"
#6	8" x 8" x 4"	8" x 8" x 4"	10" x 10" x 4"
#8	8" x 8" x 4"	8" x 8" x 4"	8" x 8" x 4"

4. Junction boxes with an internal volume of less than 100 cu. in. and supported by entering raceways must have threaded entries or hubs identified for the intended purpose and supported by connection of two or more rigid metal conduits. Secure conduit within 3 ft. of the enclosure or within 18 in. of the enclosure if all conduit entries are on the same side. Mechanically secure all junction boxes with an internal volume greater than 100 cu. inches.

5. Provide hot dipped galvanized cast iron or sand cast aluminum outlet boxes for junction boxes containing only 10 AWG or 12 AWG conductors. Do not use die cast aluminum boxes. Size outlet boxes according to the NEC.

6. Do not use intermediate metal conduit (IMC) or electrical metallic tubing (EMT) unless specifically required by the plan sheets. When EMT is called for, provide junction boxes made from galvanized steel sheeting, listed and approved for outdoor use, unless otherwise noted on the plans. Size all galvanized steel junction boxes in accordance with the NEC. Provide junction boxes for IMC conduit systems that meet the same requirements for junction boxes used with RMC systems.

7. Provide PVC junction boxes intended for outdoor use on PVC conduit systems, unless otherwise noted on the plans.

8. Provide PVC elbows in PVC conduit systems, unless otherwise shown on the plans. Use only a flat, high tensile strength polyester fiber pull tape for pulling conductors through the PVC conduit system. When galvanized steel RMC elbows are specifically called for in the plans and any portion of the RMC elbow is buried less than 18 in., ground the RMC elbow by means of a grounding bushing on a rigid metal extension. Grounding of the rigid metal elbow is not required if the entire RMC elbow is encased in a minimum of 2 in. of concrete. PVC extensions are allowed on these concrete encased rigid metal elbows. RMC or PVC elbows are subsidiary to various bid items.

9. When required, provide High-Density Polyethylene (HDPE) conduit with factory installed internal conductors according to Item 622 "Duct Cable." At the Contractor's request and with approval by the Engineer, substitute HDPE conduit with no conductors for bored schedule 40 or schedule 80 PVC conduit bid under Item 618. Ensure bored HDPE substituted for PVC is schedule 40 and of the same size PVC called for in the plans. Ensure the substituted HDPE meets the requirements of Item 622, except that the conduit is supplied without factory-installed conductors. Make the transition of the HDPE conduit to PVC (or RMC elbow when required) at the bore pit. Provide conduit of the size and schedule as shown on the plans. Do not extend substituted conduit into ground boxes or foundations. Provide PVC or galvanized steel RMC elbows as called for at all ground boxes and foundations.

10. Use two-hole straps when supporting 2 in. and larger conduits. On electrical service poles, properly sized stainless steel or hot dipped galvanized one-hole standoff straps are allowed on the service riser conduit.

B. CONSTRUCTION METHODS

1. Provide and install expansion joint conduit fittings on all structure-mounted conduits at the structure's expansion joints to allow for movement of the conduit. In addition, provide and install expansion joint fittings on all continuous runs of galvanized steel RMC conduit externally exposed on structures such as bridges at maximum intervals of 150 ft. When requested by the project Engineer, supply manufacturer's specification sheet for expansion joint conduit fittings. Repair or replace expansion joint fittings that do not allow for movement at no additional cost to the Department. Provide the method of determining the amount of expansion to the Engineer upon request. Do not use LFMC or LFNC as a substitute for the required expansion conduit fittings.

2. Space all conduit supports at maximum intervals of 5 ft. Install conduit spacers when attaching metal conduit to surface of concrete structures. See "Conduit Mounting Options" on ED(2). Install conduit support within 3 ft. of all enclosures and conduit terminations.

3. Do not attach conduit supports directly to pre-stressed concrete beams except as shown specifically in the plans or as approved by the Engineer.

4. Unless otherwise shown on the plans, jack or bore conduit placed beneath existing roadways, driveways, sidewalks, or after the base or surfacing operation has begun. Backfill and compact the bore pits below the conduit per Item 476 "Jacking, Boring, or Tunneling Pipe or Box" prior to installing conduit or duct cable to prevent bending of the connections.

5. When placing conduit in the sub-grade of new roadways, backfill all trenches with excavated material unless otherwise noted on the plans. When placing conduit in the sub-base of new roadways, backfill all trenches with cement-stabilized base as per requirements of Items 110 "Excavation", 400 "Excavation and Backfill for Structures", 401 "Flowable Backfill", 402 "Trench Excavation Protection", and 403 "Temporary Special Shoring."

6. Provide and place warning tape approximately 10 in. above all trenched conduit as per Item 618.

7. During construction, temporarily cap or plug open ends of all conduit and raceways immediately after installation to prevent entry of dirt, debris and animals. Temporary caps constructed of durable duct tape are allowed. Tightly fix the tape to the conduit opening. Clean out the conduit and prove it clear in accordance with Item 618 prior to installing any conductors.

8. Ensure conduit entry into the top of any enclosure is waterproof by installing conduit sealing hubs or using boxes with threaded bosses. This includes surface mounted safety switches, meter cans, service enclosures, auxiliary enclosures and junction boxes. Grounding bushings on water tight sealing hubs are not required.

9. Fit the ends of all PVC conduit terminations with bushings or bell end fittings. Provide and install a grounding type bushing on all metal conduit terminations.

10. Install a bonding jumper from each grounding bushing to the nearest ground rod, grounding lug, or equipment grounding conductor. Ensure all bonding jumpers are the same size as the equipment grounding conductor. Bonding of conduit used as a casing under roadways for duct cable is not required, if the duct extends the full length through the casing.

11. At all electrical services, install a 6 AWG solid copper grounding electrode conductor.

12. Place conduits entering ground boxes so that the conduit openings are between 3 in. and 6 in. from the bottom of the box. See the ground box detail on sheet ED(4).

13. Seal ends of all conduits with duct seal, expandable foam, or by other methods approved by the Engineer. Seal conduit immediately after completion of conductor installation and pull tests. Do not use duct tape as a permanent conduit sealant. Do not use silicone caulk as a conduit sealant.

14. File smooth the cut ends of all mounting strut and conduit. Before installing, paint the field cut ends of all mounting strut and RMC (threaded or non-threaded) with zinc rich paint (94% or more zinc content) to alleviate overspray. Use zinc rich paint to touch up galvanized material as allowed under Item 445 "Galvanizing." Do not paint non-galvanized material with a zinc rich paint as an alternative for materials required to be galvanized.

Texas Department of Transportation

Traffic Operations Division Standard

ELECTRICAL DETAILS CONDUITS & NOTES

ED(1)-14

FILE:	ed1-14.dgn	DN:	CK:	DW:	CK:
©TxDOT	October 2014	CONT	SECT	JOB	HIGHWAY
	REVISIONS	--	--	--	--
		DIST		COUNTY	SHEET NO.
		--		--	165

71A

DATE: 9/28/2020 1:27:07 PM
FILE: ...\CADD\SHEETS\SGSD_ed1-14.dgn

DISCLAIMER:
The use of this standard is governed by the "Texas Engineering Practice Act". No warranty of any kind is made by TxDOT for any purpose whatsoever. TxDOT assumes no responsibility for the conversion of this standard to other formats or for incorrect results or damages resulting from its use.

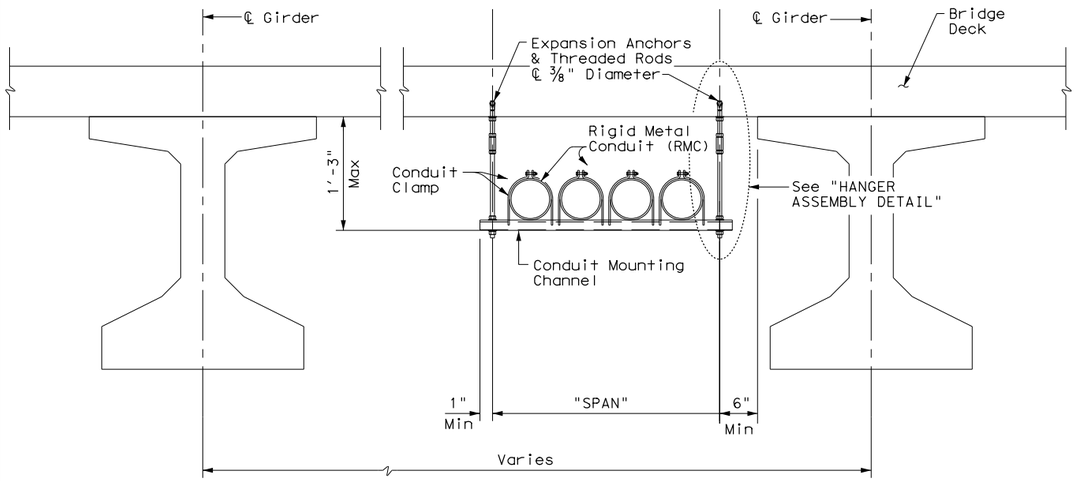

CONDUIT HANGING DETAIL

CONDUIT MOUNTING CHANNEL		
"SPAN"	"W" x "H"	"T"
less than 2'	1 5/8" x 1 3/8"	12 Ga.
2'-0" to 2'-6"	1 5/8" x 1 5/8"	12 Ga.
>2'-6" to 3'-0"	1 5/8" x 2 7/16"	12 Ga.

Channels with round or short slotted hole patterns are allowed, if the load carrying capacity is not reduced by more than 15%.

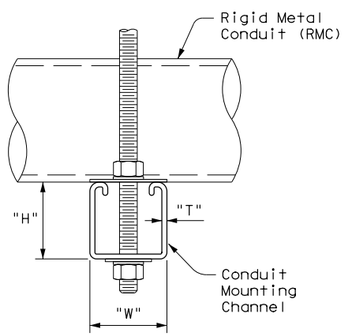

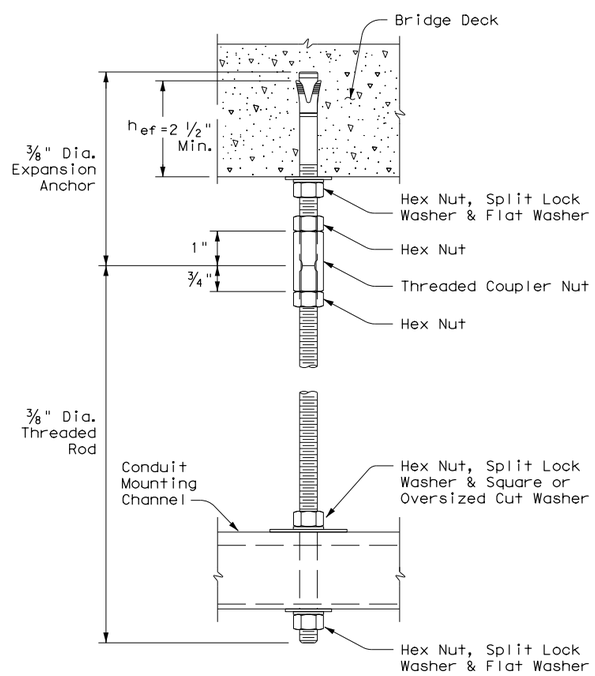

HANGER ASSEMBLY DETAIL

ELECTRIC CONDUIT TO BRIDGE DECK ATTACHMENT

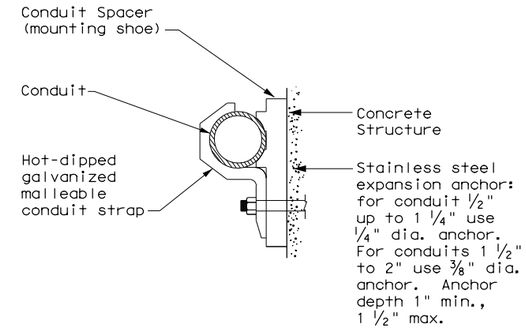

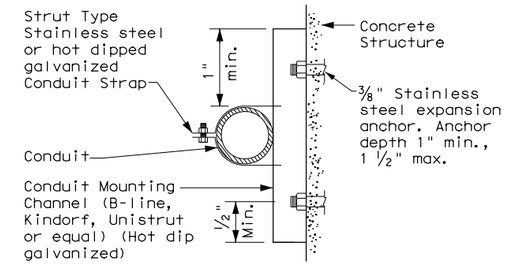

CONDUIT MOUNTING OPTIONS

Attachment to concrete surfaces
See ED(1)B.2

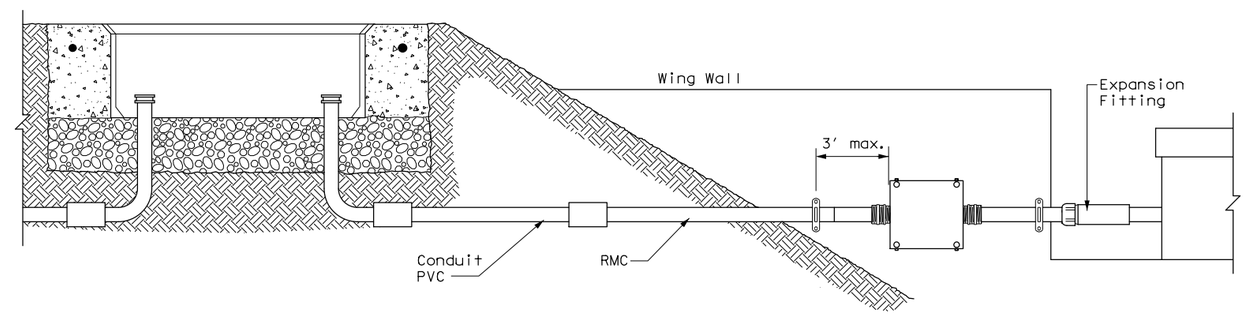

TYPICAL CONDUIT ENTRY TO BRIDGE STRUCTURE DETAIL

EXPANSION ANCHOR NOTES FOR BRIDGE DECK ATTACHMENT

1. Use torque controlled mechanical expansion anchors that are approved for use in cracked concrete by the International Code Council, Evaluation Service (ICC-ES). The chosen anchor product shall have a designated ICC-ES Evaluation Report number, and its approval status shall be maintained on the ICC-ES website under Division 031600 for Concrete Anchors.
2. Unless otherwise approved by the Engineer: do not use adhesive anchors; do not use expansion anchors that are not included in the ICC-ES approval list; and do not use expansion anchors that are only approved for use in uncracked concrete.
3. Use anchors manufactured with stainless steel expansion wedges. Anchors manufactured with carbon steel expansion wedges are not allowed. Anchor bodies can be either zinc-plated carbon steel or stainless steel. For application in marine environment, both the anchor body and expansion wedge shall be stainless steel.
4. Install anchors as shown on the plans and in accordance with the anchor manufacturer's published installation instructions. Arrange a field demonstration test to evaluate the procedures and tools. The test shall be witnessed and approved by the Engineer prior to furnishing anchors on the structure.
5. Prior to hole drilling, use rebar locator to ensure clearing of existing deck strands or reinforcement. Install anchors to ensure a minimum effective embedment depth, (h_{ef}), as shown. Increase (h_{ef})as needed to ensure sufficient thread length for proper torqueing and tightening of anchors.
6. Use anchors of minimum 1600 Lbs tensile capacity (minimum of steel, concrete breakout, and concrete pullout strengths as determined by ACI 318 Appendix D) at the required minimum embedment depth (h_{ef}). No lateral loads shall be introduced after conduit installation.

Texas Department of Transportation

Traffic Operations Division Standard

ELECTRICAL DETAILS CONDUIT SUPPORTS

ED(2)-14

FILE: ed2-14.dgn	DN: TxDOT	CK: TxDOT	DW: TxDOT	CK: TxDOT
©TxDOT October 2014	CONT	SECT	JOB	HIGHWAY
REVISIONS	--	--	--	--
	DIST	COUNTY		SHEET NO.
	--	--		166

71B

DATE: 9/28/2020 1:27:08 PM
FILE: ...\CADD\SHEETS\SGSD_ed2-14.dgn

DISCLAIMER:
The use of this standard is governed by the "Texas Engineering Practice Act". No warranty of any kind is made by TxDOT for any purpose whatsoever. TxDOT assumes no responsibility for the conversion of this standard to other formats or for incorrect results or damages resulting from its use.

ELECTRICAL CONDUCTORS

A. MATERIAL INFORMATION

1. Provide Type XHHW insulated conductors in accordance with Departmental Material Specification (DMS)11040 "Conductors" and Item 620 "Electrical Conductors." Provide conductors as listed on the Material Producers List (MPL) on the Department web site under "Roadway Illumination and Electrical Supplies" Item 620. Color code insulated conductors in conformance with the NEC. Identify grounded (neutral) conductors with white insulation. Identify grounding conductors (ground wires) with green insulation or bare conductors. Identify ungrounded (hot) conductors with any color insulation except green, white, or gray. Keep color scheme consistent throughout the wiring system. Identify conductors 6 American Wire Gauge (AWG) and smaller by continuous color jacket. Identify electrical conductors 4 AWG and larger by continuous color jacket or by colored tape. When identifying conductors with colored tape, mark at least 6 in. of the conductor's insulation with half laps of tape.

2. Provide a solid copper 6 AWG grounding electrode conductor to bond the electrical service equipment to the concrete encased grounding electrode or the ground rod at the service location. Connect the grounding electrode conductor to the ground rod with a UL listed connector in accordance with DMS 11040. Connect the grounding electrode conductor to the concrete encased grounding electrode as shown in the plans.

3. Where two or more circuits are present in one conduit or enclosure, permanently identify the conductors of each branch circuit by attaching a non-metallic tag around both circuit conductors at each accessible location. Provide tags with two straps, large enough to indicate circuit number, letter, or other identification as shown in the plans. Print circuit identification on the tag with a permanent marker.

4. Use listed compression or screw type pressure connectors, terminal blocks, or split bolt connectors for splicing as specified in DMS 11040. Use hot melt adhesive tape to fill the gap and seal the ends of heat shrink tubing. Provide UL listed gel-filled insulating splice covers. Splicing materials, insulating materials, breakaway disconnects, splice covers, and fuse holders are subsidiary to various bid items.

B. CONSTRUCTION METHODS

1. Use only a flat, high tensile strength polyester fiber pull tape for pulling conductors through the conduit system. After installing conductors in conduit, perform conductor pull test. If a conductor cannot be freely pulled, make any needed alterations or repairs at no additional cost to the department. Perform insulation resistance tests in accordance with Item 620. Coordinate with the Engineer to witness the tests.

2. Leave 2 ft. minimum, 3 ft. maximum length for each conductor up to the splice in ground boxes. Leave 3 ft. minimum, 4 ft. maximum length of conductor in ground boxes when pulled through with no splice. Leave 1 ft. minimum, 1.5 ft. maximum length of conductor at enclosures, weatherheads and pole bases.

3. Make splices only in junction boxes, ground boxes, pole bases, or electrical enclosures and use only listed compression or screw type pressure connectors, terminal blocks, or split bolt connectors. Insulate splices with heavy wall heat shrink tubing or gel-filled insulating splice covers to provide a watertight splice. Overlap conductor insulation with heat shrink tubing a minimum of 2 in. past both sides of the splice. Where heat shrink tubing may not shrink sufficiently to provide a watertight seal around the individual conductors, prior to heating the tubing, increase the diameter of the conductor insulation using hot melt adhesive tape to provide a watertight seal between the individual conductors and the heat shrink tubing. Ensure the tape extends past the heat shrink tubing. Use hot melt adhesive tape to fill the gap and seal the ends of heat shrink tubing. Heat shrink tubing that appears to have been burned, or overheated, is considered defective and must be replaced.

4. Size and install gel-filled insulating splice covers according to manufacturer's specifications when used in place of heat shrink tubing.

5. Wire nuts with factory applied waterproof sealant may be used for 8 AWG or smaller conductors in above ground junction boxes, but not in pole bases or ground boxes. Install wire nuts in an upright position to prevent the accumulation of water.

6. Support conductors in illumination poles with a J-hook at the top of the pole.

7. When terminating conductors, remove the insulation and jacketing material without nicking the individual strands of the conductor. Conductors with nicked individual conductor strands or removed strands will be considered damaged.

8. Replace conductors and cables that are damaged beyond repair or that fail an insulation resistance test at no additional cost to the department.

9. Do not repair damaged conductors with duct tape, electrical tape, or wire nuts. Use only approved splicing methods.

10. Do not terminate more than one conductor under a single connector, unless the connector is rated for multiple conductors. Do not exceed the pressure connector's listing for maximum number and size of conductors allowed.

11. Install breakaway connectors on conductors bid under Item 620 whenever those conductors pass through a breakaway support device. Follow manufacturer's instructions when terminating conductors to breakaway connectors. Properly torque threaded connections. Proper terminations are critical to the safe operation of breakaway devices. Trim waterproofing boots on breakaway connectors to fit snugly around the conductor to ensure waterproof connection. Only one conductor may enter a single opening in a boot. Provide waterproof boots with the correct number of openings. Leave unused openings factory sealed. Use prequalified breakaway connectors as shown on the MPL.

12. Provide and install a separate stranded equipment grounding conductor (EGC) in all conduits that contain circuit wiring of 50 volts or more. Unless shown elsewhere, size the EGC to be the same size as the largest current carrying conductor contained in the conduit. Ensure all EGCs are bonded together at every accessible location. For traffic signal installations, provide a minimum size 8 AWG EGC. The EGC is paid for under Item 620.

C. TEMPORARY WIRING

1. Install temporary conductors and electrical equipment in accordance with the NEC article "Temporary Installations" and Department standard sheets.

2. Provide a ground fault circuit interrupter (GFCI) for power outlets for portable electrical equipment, power tools, ice machines, ice storage bins and refrigerators located outdoors at grade. GFCI may be any one of the following: molded cord and plug set, receptacle, or circuit breaker type.

3. Use listed wire nuts with factory applied sealant for temporary wiring where approved.

4. Enclose conductor splices within a listed enclosure or ground box, or ensure the splices are more than 10 ft. above grade vertically and more than 5 ft. horizontally from any metal structure. Where installing temporary conductors in areas subject to vehicle traffic or mobile construction equipment, ensure the vertical clearance to ground is at least 18 ft. when measured at the lowest point. Ground messenger wires that support power conductors in conformance with the NEC.

5. Protect and when necessary repair any existing electrical conduits uncovered during the construction process in a timely manner and in conformance with the NEC.

GROUND RODS & GROUNDING ELECTRODES

A. MATERIAL INFORMATION

1. Provide and install a grounding electrode at electrical services. Provide ground rods according to DMS 11040 and the plans. Larger diameter or longer length rods may be called for in some specific locations, see the individual plans sheets. Concrete encased grounding electrodes may be called for in specific locations including electrical service, see individual plan sheets.

B. CONSTRUCTION METHODS

1. Furnish auxiliary ground rods for lightning protection and install in soil, concrete, or both, as called for in the plans. For ground rods installed in concrete, ensure the connection of the conductor to the ground rod is readily accessible for inspection or repairs. For ground rods installed in soil, ensure that the upper end is between 2 to 4 in. below finished grade.

2. Do not place ground rods in the same drilled hole as a timber pole.

3. Install ground rods so the imprinted part number is at the upper end of the rod.

4. Remove all non-conductive coatings such as concrete splatter from the rod at the clamp location.

5. Route all conductors as short and straight as possible for connection to lightning protection ground rods. When a bend is required, ensure a minimum radius bend of four inches for these conductors.

6. Unless otherwise called for in the plans, protect grounding electrode conductors with non-metallic conduit. When protecting grounding electrode conductors with metal conduit, provide and install a grounding type bushing and properly sized bonding jumper on each end of the metal conduit.

7. Written authorization is required before installing a ground rod in a horizontal trench for rocky soil or a solid rock bottom.

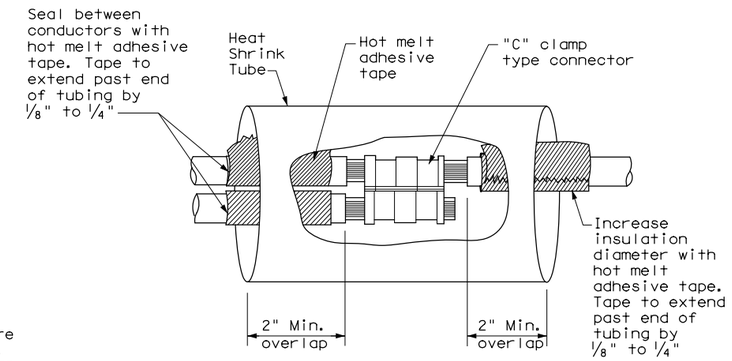

SPLICE OPTION 1
Compression Type

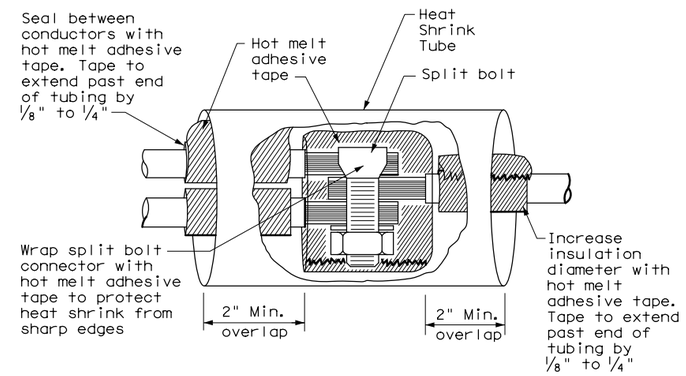

SPLICE OPTION 2
Split Bolt Type

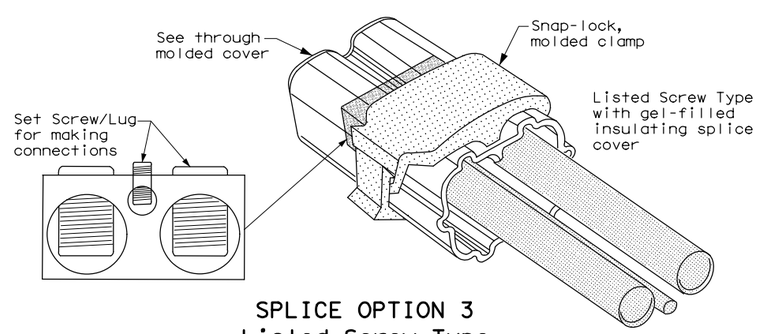

SPLICE OPTION 3
Listed Screw Type

Texas Department of Transportation — Traffic Operations Division Standard

ELECTRICAL DETAILS CONDUCTORS

ED(3)-14

FILE: ed3-14.dgn	DN: TxDOT	CK: TxDOT	DW: TxDOT	CK: TxDOT
© TxDOT October 2014	CONT	SECT	JOB	HIGHWAY
REVISIONS	--	--	--	--
	DIST	COUNTY		SHEET NO.
	--	--		167

71C

DATE: 9/28/2020 1:27:11 PM
FILE: ...\CADD\SHEETS\SGSD_ed3-14.dgn

DISCLAIMER:
The use of this standard is governed by the "Texas Engineering Practice Act". No warranty of any kind is made by TxDOT for any purpose whatsoever. TxDOT assumes no responsibility for the conversion of this standard to other formats or for incorrect results or damages resulting from its use.

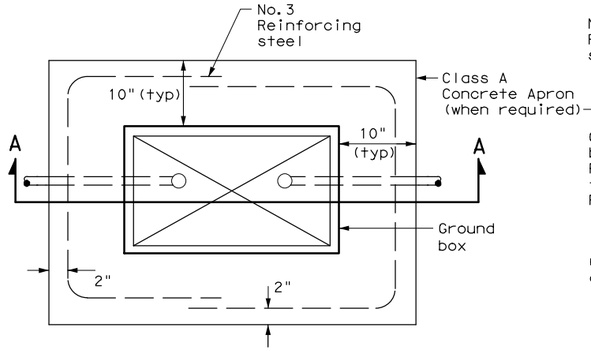

PLAN VIEW

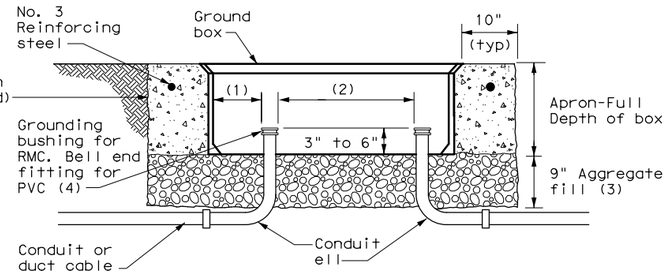

SECTION A - A

APRON FOR GROUND BOX

(1) Uniformly space ends of conduits within the ground box. Position ends of conduits so that ground box walls do not interfere with the installation of grounding bushings or bell end fittings.

(2) Maintain sufficient space between conduits to allow for proper installation of bushing.

(3) Place aggregate under the box, not in the box. Aggregate should not encroach on the interior volume of the box.

(4) Install a grounding bushing on the upper end of all RMC terminating in a ground box. Ground RMC elbows when any part of the elbow is less than 18 in. below the bottom of the ground box. Install a PVC bushing or bell end fitting on the upper end of all PVC conduits terminating in a ground box.

GROUND BOXES

A. MATERIALS

1. Provide polymer concrete ground boxes measuring 16x30x24 in. (WxLxD) or smaller in accordance with Departmental Material Specification (DMS) 11070 "Ground Boxes" and Item 624 "Ground Boxes."

2. Provide Type A, B, C, D, and E ground boxes as shown in the plans, and as listed on the Material Producers List (MPL) on the Department web site under "Roadway Illumination and Electrical Supplies," Item 624.

3. Ensure ground box cover is correctly labeled in accordance with DMS 11070.

4. Provide larger ground boxes in accordance with Item 624 and as shown in the plans.

B. CONSTRUCTION METHODS

1. Remove all gravel and dirt from conduit. Cap all conduits prior to placing aggregate and setting ground box. Provide Grade 3 or 4 coarse aggregate as shown on Table 2 of Item 302 "Aggregates for Surface Treatments." Ensure aggregate bed is in place and at least 9 inches deep, prior to setting the ground box. Install ground box on top of aggregate.

2. Cast ground box aprons in place. Reinforcing steel may be field bent. Ensure the depth of concrete for the apron extends from finished grade to the top of the aggregate bed under the box. Ground box aprons, including concrete and reinforcing steel, are subsidiary to ground boxes when called for by descriptive code.

3. Keep bolt holes in the box clear of dirt. Bolt covers down when not working in ground boxes.

4. Install all conduits and ells in a neat and workmanlike manner. Uniformly space conduits so grounding bushings and bell end fittings can easily be installed.

5. Temporarily seal all conduits in the ground box until conductors are installed.

6. Permanently seal conduits immediately after the completion of conductor installation and pull tests. Permanently seal the ends of all conduits with duct seal, expandable foam, or other method as approved. Do not use duct tape as a permanent conduit sealant. Do not use silicone caulk as a sealant.

7. When a ground rod is present in a ground box, bond all equipment grounding conductors together and to the ground rod with listed connectors.

8. When a type B or D ground box is stacked to meet volume requirements, it is allowable to cut an appropriately sized hole for conduit entry in the side wall at least 18 inches below grade.

9. If an existing ground box in the contract has a metal cover, bond the cover to the equipment grounding conductor with a 3 ft. long stranded bonding jumper the same size as the grounding conductor. The bonding jumper is subsidiary to various bid items. Verify existing ground boxes with metal covers are shown on the plans, with notes fully describing the work required.

10. If other ground boxes with metal covers are within the project limits but are not part of the contract, the Engineer may direct the Contractor to bond the metal covers, identifying the specific boxes in writing. This work will be paid for separately.

11. Bond metal ground box covers to the grounding conductor with a tank ground type lug.

GROUND BOX DIMENSIONS

TYPE	OUTSIDE DIMENSIONS (INCHES) (Width x Length X Depth)
A	12 X 23 X 11
B	12 X 23 X 22
C	16 X 29 X 11
D	16 X 29 X 22
E	12 X 23 X 17

GROUND BOX COVER DIMENSIONS

TYPE	DIMENSIONS (INCHES)							
	H	I	J	K	L	M	N	P
A, B & E	23 1/4	23	13 3/4	13 1/2	9 7/8	5 1/8	1 3/8	2
C & D	30 1/2	30 1/4	17 1/2	17 1/4	13 1/4	6 3/4	1 3/8	2

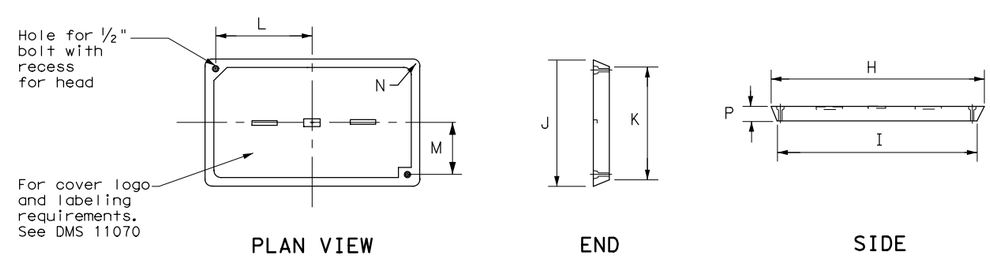

PLAN VIEW END SIDE

GROUND BOX COVER

Texas Department of Transportation

Traffic Operations Division Standard

ELECTRICAL DETAILS GROUND BOXES

ED(4)-14

FILE: ed4-14.dgn	DN: TxDOT	CK: TxDOT	DW: TxDOT	CK: TxDOT
©TxDOT October 2014	CONT	SECT	JOB	HIGHWAY
REVISIONS	--	--	--	--
	DIST		COUNTY	SHEET NO.
	--		--	168

71D

DATE: 9/28/2020 1:27:14 PM
FILE: ...\CADD\SHEETS\SGSD_ed4-14.dgn

TRAFFIC SIGNAL NOTES

1. Do not pass luminaire conductors through the signal controller cabinet.
2. Include an equipment grounding conductor in all conduits throughout the electrical system. Bond all exposed metal parts to the grounding conductor.
3. Provide roadway luminaires, when required, in accordance with the material and construction sections of Item 610, "Roadway Illumination Assemblies," except for performance testing of luminaires. Test installed roadway luminaires for proper operation as a part of the associated traffic signal system test.
4. If internally illuminated street name signs are approved for use, ground the fixture to the pole with a 12 AWG green XHHW conductor.
5. Bond anchor bolts to rebar cage in two locations using #3 bars or 6 AWG stranded copper conductors. Use listed mechanical connectors rated for embedment in concrete. See TXDOT standard TS-FD for further details.
6. Drill and tap signal poles for ½ in. X 13 UNC tank ground fitting. Provide and install tank ground fitting 4 in. to 6 in. directly below electrical service enclosure. Provide properly sized hole through the bottom of the enclosure for the service grounding electrode conductor. Connect the electrical service grounding electrode conductor to the tank ground fitting. Ensure electrical service grounding electrode conductor is as short and straight as possible from the enclosure to the tank ground fitting. See Inset A detail for further information. Size service entrance conduit and branch circuit conduit as shown in the plans.
7. Mount electrical service enclosure and meter to signal pole with stainless steel bands. Ensure bands are a minimum width of ¾ in. Secure enclosures to bands using two-bolt brackets. Install brackets near top and bottom of each enclosure. Install properly sized stainless steel washers on each bolt in the enclosure. Band or drill and tap properly sized stand-off straps to signal pole for attaching conduit.
8. Conduct pull tests and insulation resistance tests on all illumination and power conductors as required in Item 620 "Electrical Conductors" and ED(3). To prevent electronics damage, do not conduct insulation resistance tests on traffic signal cables after termination.
9. Lock all enclosures and bolt down all ground box covers before applying power to the signal installation.
10. Terminate conduits entering the top of enclosures with a conduit-sealing hub or threaded boss such as meter hub. Install a grounding bushing on all metal conduits not connected to conduit-sealing hub or threaded boss. Bond the grounding bushing to the ground bus with a bonding jumper. Seal all conduits entering enclosures with duct seal or expanding foam. Do not use silicone to seal conduit ends.
11. For all conduits, ensure the burial depth is a minimum of 18". Ensure the minimum burial depth for conduit placed under a roadway is 24".

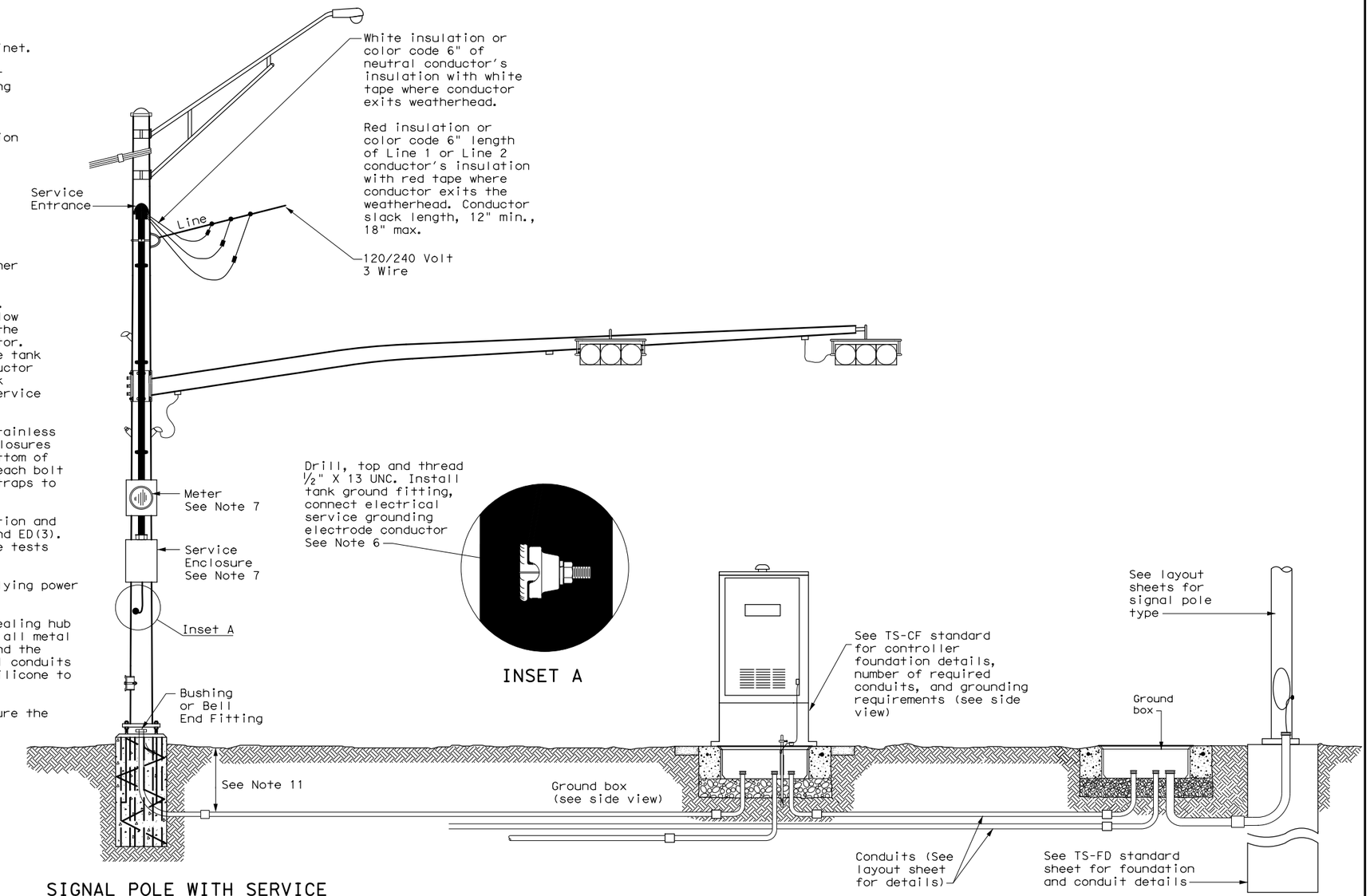

SIGNAL POLE WITH SERVICE

Type T electrical service mounted on signal pole shown as an example. See electrical details, layout sheets, and electrical service data chart for additional details.

SIGNAL CONTROLLER FRONT VIEW

SIGNAL POLE

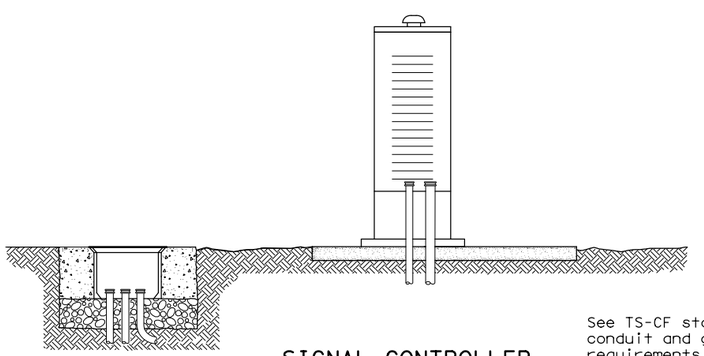

SIGNAL CONTROLLER SIDE VIEW

See TS-CF standard for conduit and grounding requirements. See layout sheets for ground box locations and any additional conduits that are required.

DISCLAIMER:
The use of this standard is governed by the "Texas Engineering Practice Act". No warranty of any kind is made by TxDOT for any purpose whatsoever. TxDOT assumes no responsibility for the conversion of this standard to other formats or for incorrect results or damages resulting from its use.

DATE: 9/28/2020 1:27:15 PM
FILE: ...\CADD\SHEETS\SGSD_ed8-14.dgn

Texas Department of Transportation — Traffic Operations Division Standard

ELECTRICAL DETAILS TYPICAL TRAFFIC SIGNAL SYSTEM DETAILS

ED(8)-14

FILE: ed8-14.dgn	DN: TxDOT	CK: TxDOT	DW: TxDOT	CK: TxDOT
© TxDOT October 2014	CONT	SECT	JOB	HIGHWAY
REVISIONS	--	--	--	--
	DIST		COUNTY	SHEET NO.
	--		--	169

71H

DISCLAIMER:
The use of this standard is governed by the "Texas Engineering Practice Act". No warranty of any kind is made by TxDOT for any purpose whatsoever. TxDOT assumes no responsibility for the conversion of this standard to other formats or for incorrect results or damages resulting from its use.

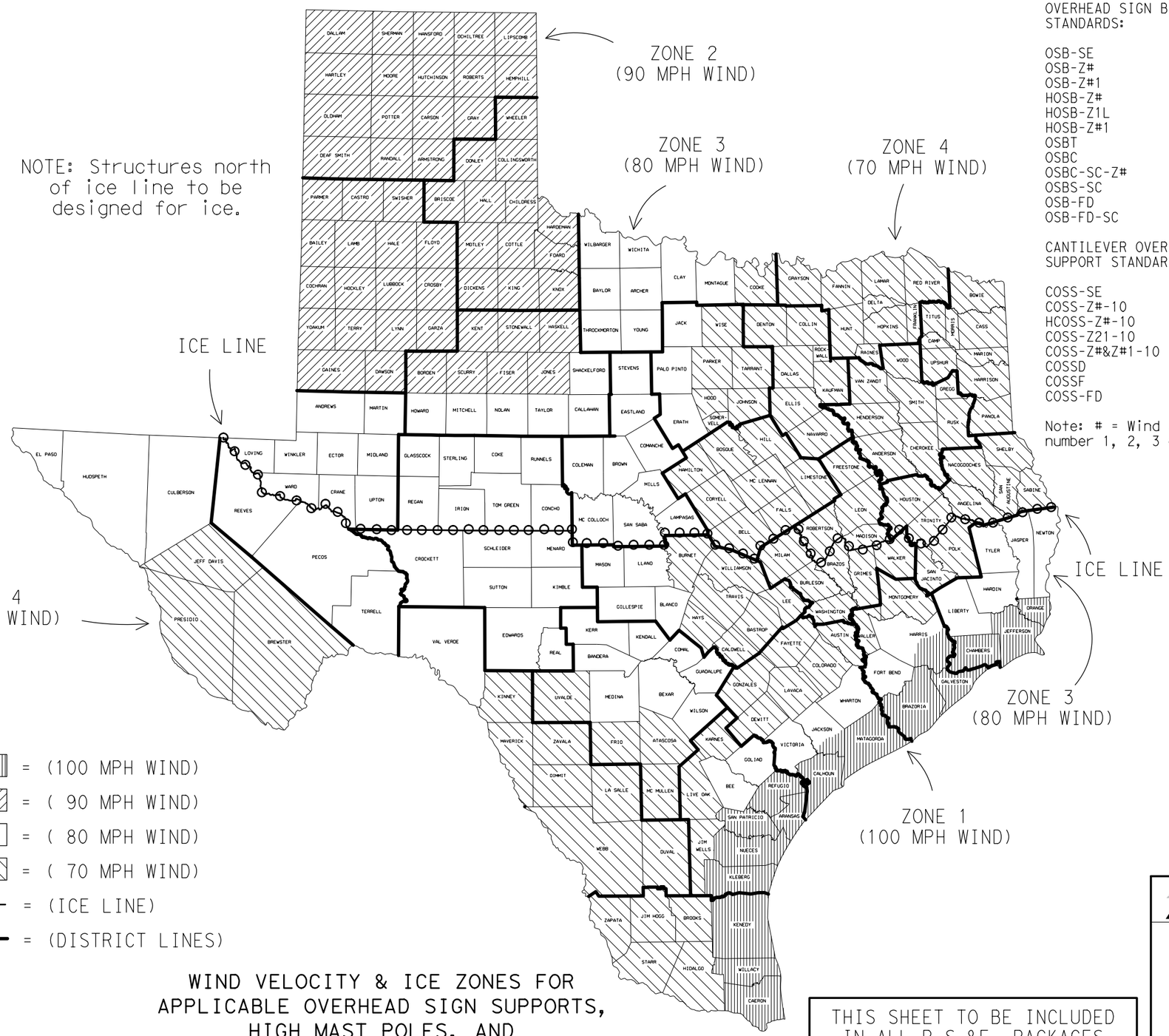

LEGEND

ZONE 1 - = (100 MPH WIND)
ZONE 2 - = (90 MPH WIND)
ZONE 3 - = (80 MPH WIND)
ZONE 4 - = (70 MPH WIND)
= (ICE LINE)
= (DISTRICT LINES)

APPLICABLE STANDARDS SHEETS

OVERHEAD SIGN BRIDGE STANDARDS:

OSB-SE
OSB-Z#
OSB-Z#1
HOSB-Z#
HOSB-Z1L
HOSB-Z#1
OSBT
OSBC
OSBC-SC-Z#
OSBS-SC
OSB-FD
OSB-FD-SC

CANTILEVER OVERHEAD SIGN SUPPORT STANDARDS:

COSS-SE
COSS-Z#-10
HCOSS-Z#-10
COSS-Z21-10
COSS-Z#&Z#1-10
COSSD
COSSF
COSS-FD

Note: # = Wind Zone number 1, 2, 3 or 4

HIGH MAST ILLUMINATION POLE STANDARDS:

HMIP-98
HMIF-98

WALKWAYS AND BRACKETS STANDARDS:

SWW
SB(SWL-1)

TRAFFIC SIGNAL POLE STANDARDS:

SP-80
SP-100
SMA-80
SMA-100
DMA-80
DMA-100
MA-C
MAC(ILSN)
MAD-D
TS-FD
LUM-A
CFA
LMA
TS-C
MA-DPD

FOR HARRIS CO. ONLY
Zone line is just North of US 90, around on the North, West and South sides of IH 610 and down the West side of SH 288.

FOR JACKSON CO. ONLY
Zone line is just North of SH 616.

WIND VELOCITY & ICE ZONES FOR APPLICABLE OVERHEAD SIGN SUPPORTS, HIGH MAST POLES, AND TRAFFIC SIGNAL POLES

Based on 50 Year Mean Recurrence Interval of Fastest Mile Wind Velocity at 33 feet height.

THIS SHEET TO BE INCLUDED IN ALL P.S.&E. PACKAGES CONTAINING ONE OR MORE OF THE APPLICABLE STANDARD SHEETS LISTED HEREON

Texas Department of Transportation

Traffic Operations Division Standard

WIND VELOCITY AND ICE ZONES

WV & IZ-14

FILE: windice.dgn	DN: TxDOT	CK: TxDOT	DW: TxDOT	CK: TxDOT
© TxDOT April 1996	CONT	SECT	JOB	HIGHWAY
REVISIONS	--	--	--	--
8-14-Added list of applicable standards, restricting use to structures designed for Fastest Mile wind speeds.	DIST		COUNTY	SHEET NO.
	--		--	170

DATE: 9/28/2020 1:27:19 PM
FILE: ...\CADD\SHEETS\SGSD_windice.dgn

DISCLAIMER: The use of this standard is governed by the "Texas Engineering Practice Act". No warranty of any kind is made by TxDOT for any purpose whatsoever. TxDOT assumes no responsibility for the conversion of this standard to other formats or for incorrect results or damages resulting from its use.

FOUNDATION DESIGN TABLE

FDN TYPE	DRILLED SHAFT DIA	REINFORCING STEEL		EMBEDDED DRILLED SHAFT LENGTH-ft ④, ⑤, ⑥			ANCHOR BOLT DESIGN ①				FOUNDATION DESIGN LOAD ②		TYPICAL APPLICATION
		VERT BARS	SPIRAL & PITCH	TEXAS CONE PENETROMETER N blows/ft			ANCHOR BOLT DIA	Fy (ksi)	BOLT CIR DIA	ANCHOR TYPE	MOMENT K-ft	SHEAR Kips	
				10	15	40							
24-A	24"	4- #5	#2 at 12"	5.7	5.3	4.5	¾"	36	12 ¾"	1	10	1	Pedestal pole, pedestal mounted controller.
30-A	30"	8- #9	#3 at 6"	11.3	10.3	8.0	1 ½"	55	17"	2	87	3	Mast arm assembly. (see Selection Table)
36-A	36"	10- #9	#3 at 6"	13.2	12.0	9.4	1 ¾"	55	19"	2	131	5	Mast arm assembly. (see Selection Table) 30' strain pole with or without luminaire.
36-B	36"	12- #9	#3 at 6"	15.2	13.6	10.4	2"	55	21"	2	190	7	Mast arm assembly. (see Selection Table) Strain pole taller than 30' & strain pole with mast arm
42-A	42"	14- #9	#3 at 6"	17.4	15.6	11.9	2 ¼"	55	23"	2	271	9	Mast arm assembly. (see Selection Table)

NOTES:

① Anchor bolt design develops the foundation capacity given under Foundation Design Loads.

② Foundation Design Loads are the allowable moments and shears at the base of the structure.

③ Foundations may be listed separately or grouped according to similarity of location and type. Quantities are for the Contractor's information only.

④ Field Penetrometer readings at a depth of approximately 3 to 5 feet may be used to adjust shaft lengths.

⑤ If rock is encountered, the Drilled Shaft shall extend a minimum of two diameters into solid rock.

⑥ Decimal lengths in Design Table are to allow interpolation for other penetrometer values. Round to nearest foot for entry into Summary Table.

FOUNDATION SUMMARY TABLE ③

LOCATION IDENTIFICATION	AVG. N BLOW /ft.	FDN TYPE	NO. EA	DRILLED SHAFT LENGTH ⑥ (FEET)				
				24-A	30-A	36-A	36-B	42-A
POLE B	10	36-A	1			13		
POLE D	10	30-A	1		11			
TOTAL DRILLED SHAFT LENGTHS					11	13		

FOUNDATION SELECTION TABLE FOR STANDARD MAST ARM PLUS ILSN SUPPORT ASSEMBLIES (ft)

		FDN 30-A	FDN 36-A	FDN 36-B	FDN 42-A
80 MPH DESIGN WIND SPEED	MAX SINGLE ARM LENGTH	32'	48'		
	MAXIMUM DOUBLE ARM LENGTH COMBINATIONS	24' X 24'			
		28' X 28'			
		32' X 28'	32' X 32'		
			36' X 36'		
			40' X 36'		
			44' X 28'	44' X 36'	
100 MPH DESIGN WIND SPEED	MAX SINGLE ARM LENGTH		36'	44'	
	MAXIMUM DOUBLE ARM LENGTH COMBINATIONS		24' X 24'		
			28' X 28'		
			32' X 24'	32' X 32'	
				36' X 36'	
				40' x24'	40' X 36'
					44' x 36'

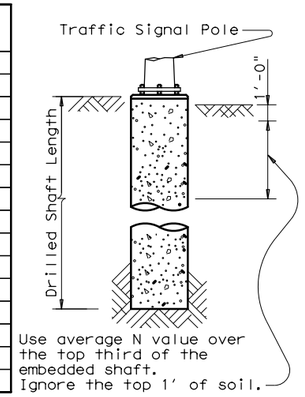

ANCHOR BOLT & TEMPLATE SIZES

BOLT DIA IN.	⑦ BOLT LENGTH	TOP THREAD	BOTTOM THREAD	BOLT CIRCLE	R2	R1
¾"	1'-6"	3"	—	12 ¾"	7 ⅛"	5 ⅝"
1 ½"	3'-4"	6"	4"	17"	10"	7"
1 ¾"	3'-10"	7"	4 ½"	19"	11 ¼"	7 ¾"
2"	4'-3"	8"	5"	21"	12 ½"	8 ½"
2 ¼"	4'-9"	9"	5 ½"	23"	13 ¾"	9 ¼"

⑦ Min dimensions given, longer bolts are acceptable.

EXAMPLE:
1. For 80mph design wind speed, foundation 30-A can support up to a 32' arm with another arm up to 28'
2. For 100mph design wind speed, foundation 36-A can support a single 36' mast arm.

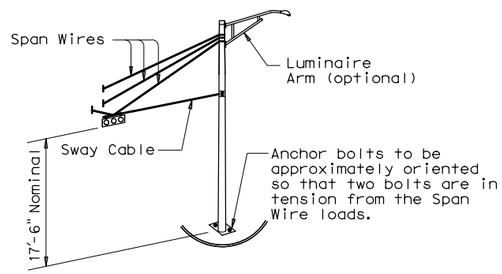

TYPICAL STRAIN POLE ASSEMBLY

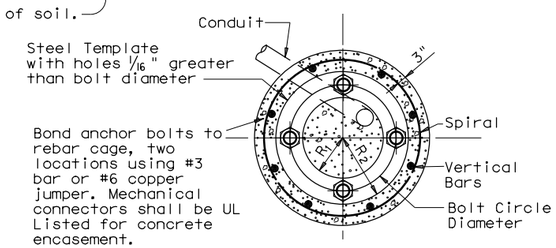

TOP VIEW

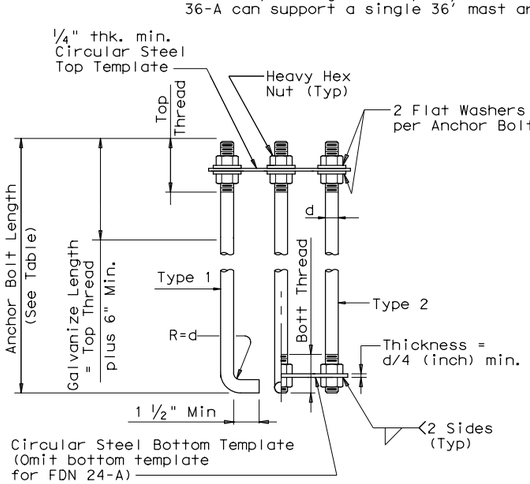

HOOKED ANCHOR (TYPE 1) | NUT ANCHOR (TYPE 2)

ANCHOR BOLT ASSEMBLY

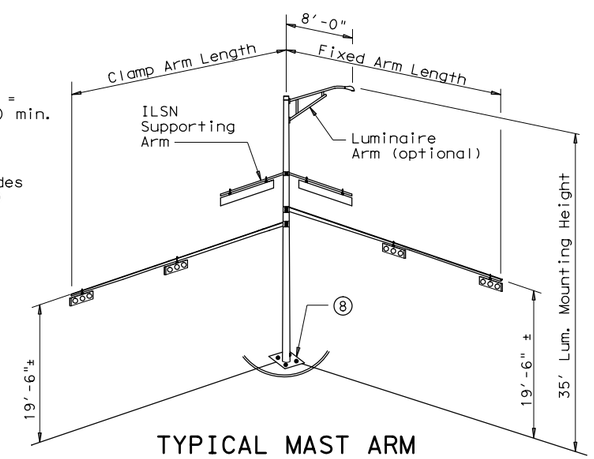

⑧ Orient anchor bolts orthogonal with the fixed arm direction to ensure that two bolts are in tension under dead load.

TYPICAL MAST ARM ASSEMBLY

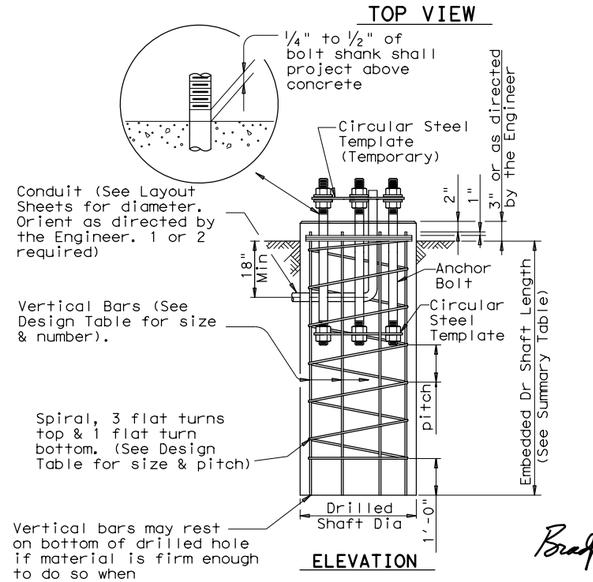

ELEVATION

FOUNDATION DETAILS

GENERAL NOTES:

Design conforms to 1994 AASHTO Standard Specifications for Structural Supports for Highway Signs, Luminaires and Traffic Signals and interim revisions thereto.

Reinforcing steel shall conform to Item 440, "Reinforcing Steel".

Concrete shall be Class "C".

Threads for anchor bolts and nuts shall be rolled or cut threads of 8UN series up to 2" in diameter or UNC series for all sizes. Bolts and nuts shall have Class 2A and 2B fit tolerances. Galvanized nuts shall be tapped after galvanizing.

Anchor bolts that are larger than 1" in diameter shall conform to "alloy steel" or "medium-strength mild steel" per Item 449, "Anchor Bolts". Anchor bolts that are 1" in diameter or less shall conform to ASTM A36. Galvanize a minimum of the top end thread length plus 6" for all anchor bolts unless otherwise noted. Exposed washers and exposed nuts shall be galvanized. All galvanizing shall be in accordance with Item 445, "Galvanizing".

Templates and embedded nuts need not be galvanized. Lubricate and tighten anchor bolts when erecting the structure in accordance with Item 449, "Anchor Bolts".

STATE OF TEXAS
BRADFORD K. BRIMLEY
125348
LICENSED
PROFESSIONAL ENGINEER
9-28-2020

Texas Department of Transportation
Traffic Operations Division

TRAFFIC SIGNAL POLE FOUNDATION

TS-FD-12

© TxDOT August 1995

DN: MS	CK: JSY	DW: MAO/MMF	CK: JSY/TEB
REVISIONS 5-96 11-99 1-12	CONT --	SECT --	JOB --
	HIGHWAY --		
	DIST --	COUNTY --	SHEET NO. 171

DATE: 9/28/2020 1:27:22 PM
FILE: ...\CADD\SHEETS\SGSD*ts-fd.dgn

Arm Length	ROUND POLES					POLYGONAL POLES					Foundation Type
	D_B	D_{19}	D_{24}	D_{30}	① thk	D_B	D_{19}	D_{24}	D_{30}	① thk	
ft.	in.	in.	in.	in.	in.	in.	in.	in.	in.	in.	
20	10.5	7.8	7.1	6.3	.179	11.5	8.5	7.7	6.8	.179	30-A
24	11.0	8.3	7.6	6.8	.179	12.0	9.0	8.2	7.3	.179	30-A
28	11.5	8.8	8.1	7.3	.179	12.5	9.5	8.7	7.8	.179	30-A
32	12.5	9.8	9.1	8.3	.179	12.0	9.0	8.2	7.3	.239	30-A
36	12.0	9.3	8.6	7.8	.239	12.5	9.5	8.7	7.8	.239	36-A
40	12.0	9.3	8.6	7.8	.239	13.5	10.5	9.7	8.8	.239	36-A
44	12.5	9.8	9.1	8.3	.239	14.0	11.0	10.2	9.3	.239	36-A
48	13.0	10.3	9.6	8.8	.239	15.0	12.0	11.2	10.3	.239	36-A

Arm Length	ROUND ARMS					POLYGONAL ARMS				
	L_1	D_1	D_2	① thk	Rise	L_1	D_1	② D_2	① thk	Rise
ft.	ft.	in.	in.	in.		ft.	in.	in.	in.	
20	19.1	6.5	3.8	.179	1′-9"	19.1	7.0	3.5	.179	1′-8"
24	23.1	7.5	4.3	.179	1′-10"	23.1	7.5	3.5	.179	1′-9"
28	27.1	8.0	4.2	.179	1′-11"	27.1	8.0	3.5	.179	1′-10"
32	31.0	9.0	4.7	.179	2′-1"	31.0	9.0	3.5	.179	2′-0"
36	35.0	9.5	4.6	.179	2′-4"	35.0	10.0	3.5	.179	2′-1"
40	39.0	9.5	4.1	.239	2′-8"	39.0	9.5	3.5	.239	2′-3"
44	43.0	10.0	4.1	.239	2′-11"	43.0	10.0	3.5	.239	2′-6"
48	47.0	10.5	4.1	.239	3′-4"	47.0	11.0	3.5	.239	2′-9"

D_B = Pole Base O.D.
D_{19} = Pole Top O.D. with no Luminaire and no ILSN
D_{24} = Pole Top O.D. with ILSN w/out Luminaire
D_{30} = Pole Top O.D. with Luminaire
D_1 = Arm Base O.D.
D_2 = Arm End O.D.
L_1 = Shaft Length
L = Nominal Arm Length

① Thickness shown are minimums, thicker materials may be used.

② D_2 may be increased by up to 1" for polygonal arms.

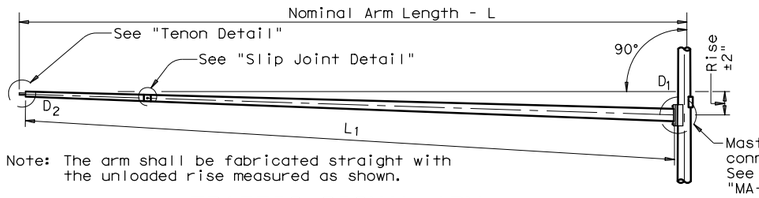

Note: The arm shall be fabricated straight with the unloaded rise measured as shown.

TRAFFIC SIGNAL ARM

(Fixed Mount)

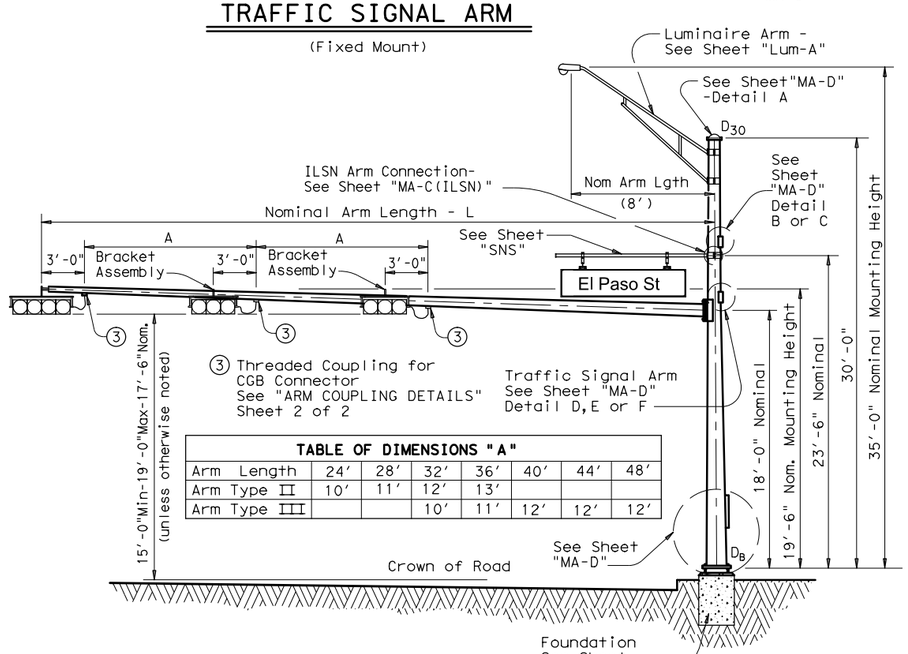

TABLE OF DIMENSIONS "A"							
Arm Length	24′	28′	32′	36′	40′	44′	48′
Arm Type II	10′	11′	12′	13′			
Arm Type III			10′	11′	12′	12′	12′

STRUCTURE ASSEMBLY

SHIPPING PARTS LIST

Ship each pole with the following attached: enlarged hand hole, pole cap, fixed-arm connection bolts and washers and any additional hardware listed in the table.

Nominal Arm Length	30′ Poles With Luminaire		24′ Poles With ILSN		19′ Poles With No Luminaire and No ILSN	
	Above hardware plus: One (or two if ILSN attached) small hand hole, clamp-on simplex		Above hardware plus one small hand hole		See note above	
ft	Designation	Quantity	Designation	Quantity	Designation	Quantity
20	20L-80		20S-80		20-80	
24	24L-80		24S-80		24-80	
28	28L-80		28S-80		28-80	
32	32L-80	1	32S-80		32-80	
36	36L-80		36S-80		36-80	
40	40L-80		40S-80		40-80	
44	44L-80	1	44S-80		44-80	
48	48L-80		48S-80		48-80	

Traffic Signal Arms (1 per Pole) Ship each arm with the listed equipment attached

Nominal Arm Length	Type I Arm (1 Signal)		Type II Arm (2 Signals)		Type III Arm (3 Signals)	
	1 CGB connector		1 Bracket Assembly and 2 CGB Connectors		2 Bracket Assemblies and 3 CGB Connectors	
ft	Designation	Quantity	Designation	Quantity	Designation	Quantity
20	20I-80					
24	24I-80		24II-80			
28	28I-80		28II-80			
32			32II-80	1	32III-80	
36			36II-80		36III-80	
40					40III-80	
44					44III-80	1
48					48III-80	

Luminaire Arms (1 per 30′ pole)

Nominal Arm Length	Quantity
8′ Arm	3

ILSN Arm (Max. 2 per pole) Ship with clamps, bolts and washers

Nominal Arm Length	Quantity
7′ Arm	
9′ Arm	

Anchor Bolt Assemblies (1 per pole)

Anchor Bolt Diameter	Anchor Bolt Length	Quantity
1 ½"	3′-4"	1
1 ¾"	3′-10"	1

Each anchor bolt assembly consists of the following: Top and Bottom templates, 4 anchor bolts, 8 nuts, 8 flat washers, and 4 nut anchor devices (Type 2) per Standard Drawing "TS-FD".

Templates may be removed for shipment.

STATE OF TEXAS
BRADFORD K. BRIMLEY
125348
LICENSED
PROFESSIONAL ENGINEER

Bradford Brimley
9-28-2020

SHEET 1 OF 2

Texas Department of Transportation
Traffic Operations Division

TRAFFIC SIGNAL SUPPORT STRUCTURES

SINGLE MAST ARM ASSEMBLY

(80 MPH WIND ZONE)

SMA-80(1)-12

© TxDOT August 1995

REVISIONS
5-96
11-99
1-12

DN: MS	CK: JSY	DW: MMF	CK: JSY
CONT	SECT	JOB	HIGHWAY
--	--	--	--
DIST		COUNTY	SHEET NO.
--		--	172

122A

DISCLAIMER: The use of this standard is governed by the "Texas Engineering Practice Act". No warranty of any kind is made by TxDOT for any purpose whatsoever. TxDOT assumes no responsibility for the conversion of this standard to other formats or for incorrect results or damages resulting from its use.

DATE: 9/28/2020 1:27:25 PM
FILE: ...\CADD\SHEETS\SGSD*sma-80-1.dgn

DISCLAIMER: The use of this standard is governed by the "Texas Engineering Practice Act". No warranty of any kind is made by TxDOT for any purpose whatsoever. TxDOT assumes no responsibility for the conversion of this standard to other formats or for incorrect results or damages resulting from its use.

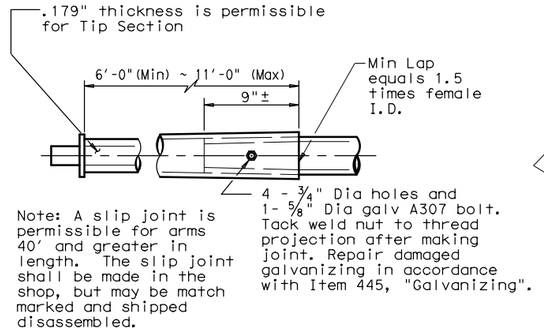

SLIP JOINT DETAIL

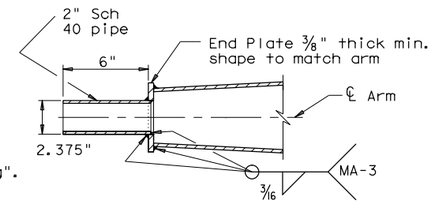

TENON DETAIL

VIBRATION WARNING

Mast Arms of SMA and DMA structures and clamp-on Arms of LMA structures of approximately 40 ft or longer are subject to harmonic vertical vibrations in light wind conditions due to the aeroelastic characteristics of a few of the myriads of possible combinations of the following: signal numbers, weights and positions; existence/solidity of backplates; presence of additional attachments to the arm, such as signs and cameras; arm-wind orientation; and arm-pole stiffness.

Such vibrations may cause fatigue damage to the structure and may lead to galloping in moderate wind conditions which may further damage the structure and alarm the public. Tests have indicated that when wind is blowing toward the back side of signal heads having un-vented backplates attached the probability of unacceptable harmonic vibration and/or galloping is rather high.

If backplates are not required for improved visibility they should not be applied to the signal heads or, if they must be applied, they should be vented as a first and inexpensive measure to mitigate vibrations.

The traffic signal mast arms shall be visually inspected in 5 to 20 mph wind conditions after installation of signal heads and any attachments, including any required backpates. If vertical movements with a total excursion (maximum upward excursion to maximum downward excursion) of more than approximately 8" are observed at the arm tip, a damping plate shall be fitted to the arm. See "Damping Plate Mounting Details" on standard sheet, MA-DPD-10.

This visual inspection shall be repeated after each modification of the structure that could affect its aeroelastic response. Excessive vibrations shall not be allowed to continue for more than two days.

Stainless steel bands (or Cables) and cast bracket as in "Astro-Brac", "Sky Bracket" or "Easy Bracket" with 1 ½" Dia Threaded Coupling.

BRACKET ASSEMBLY

GENERAL NOTES:

Design conforms to 1994 AASHTO Standard Specifications for Structural Supports for Highway Signs, Luminaires, and Traffic Signals and Interim Specifications thereto. Design Wind Speed equals 80 mph plus a 1.3 gust factor.

Poles are designed to support one 8'-0" luminaire arm, one 9'-0" internally lighted street name sign and one traffic signal arm with a length as tabulated. The specified luminaire load applied at the end of the luminaire arm equals 60 lbs vertical dead load plus the horizontal wind load on an effective projected area of 1.6 sq ft. The specified internally lighted street name sign load applied 4.5 ft from the centerline of the pole equals 85 lbs vertical dead load plus horizontal wind load on an effective projected area of 11.5 sq ft. The specified signal load applied at the end of the traffic signal arm equals 180 lbs vertical dead load plus the horizontal wind load on an effective projected area of 32.4 sq ft (actual area times drag coefficient).

See Standard Sheet "MA-D" for pole details, "MA-C" for traffic signal arm connection details, "MA-C (ILSN)" for internally lighted street name sign arm connection details, "LUM-A" for luminaire arm and connection details, "SNS" for internally lighted street name sign details, and "TS-FD" for anchor bolt and foundation details. See "MA-C" for material specifications.

Fabrication shall be in accordance with Item 686, "Traffic Signal Pole Assemblies (Steel)" and with the details, dimensions, and weld procedures shown herein. Weld references call for preapproved weld procedures which the Fabricator must obtain prior to fabrication. Materials, fabrication tolerances, and shipping practices shall meet the requirements of this sheet and Item 686, "Traffic Signal Pole Assemblies (Steel)".

Unless otherwise noted, all parts shall be galvanized in accordance with Item 445, "Galvanizing", after fabrication.

Deviation from the details and dimensions shown herein require submission of shop drawings in accordance with Item 441, "Steel Structures". Alternate designs are not acceptable.

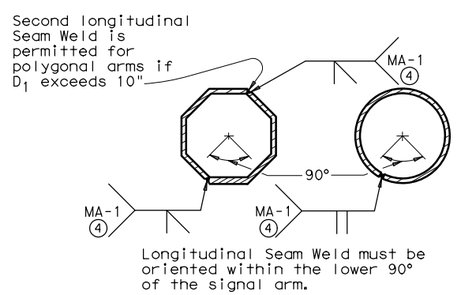

ARM WELD DETAIL

(4) 60% Min. penetration 100% pemetration within 6" of circumferential base welds.

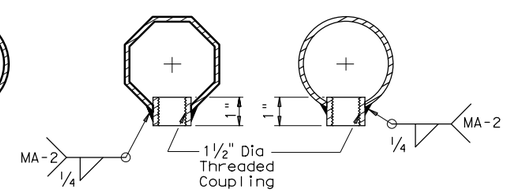

ARM COUPLING DETAILS

Texas Department of Transportation
Traffic Operations Division

TRAFFIC SIGNAL SUPPORT STRUCTURES

SINGLE MAST ARM ASSEMBLY

(80 MPH WIND ZONE)

SMA-80(2)-12

© TxDOT August 1995	DN: MS	CK: JSY	DW: MMF	CK: JSY
REVISIONS	CONT	SECT	JOB	HIGHWAY
5-96	--	--	--	--
1-12	DIST		COUNTY	SHEET NO.
	--		--	173

122B

DATE: 9/28/2020 1:27:28 PM
FILE: ...\CADD\SHEETS\SGSD*sma-80-2.dgn

DISCLAIMER: The use of this standard is governed by the "Texas Engineering Practice Act". No warranty of any kind is made by TxDOT for any purpose whatsoever. TxDOT assumes no responsibility for the conversion of this standard to other formats or for incorrect results or damages resulting from its use.

ARM SIZE D_1	‡	A	B	C	D	E	CONN BOLT DIA
in.	in.	in.	in.	in.	in.	in.	in.
6.5	.179	12	9	9	6	1 ¾	1
7.5	.179	13	9	10	6	1 ¾	1
8.0	.179	14	10	11	7	2	1 ¼
9.0	.179	16	11	13	8	2	1 ¼
9.5	.179	17	12	14	9	2	1 ¼
9.5	.239	18	12	15	9	2	1 ¼
10.0	.239	18	12	15	9	2	1 ¼
10.5	.239	18	13	15	10	3	1 ½
11.0	.239	18	13	15	10	3	1 ½

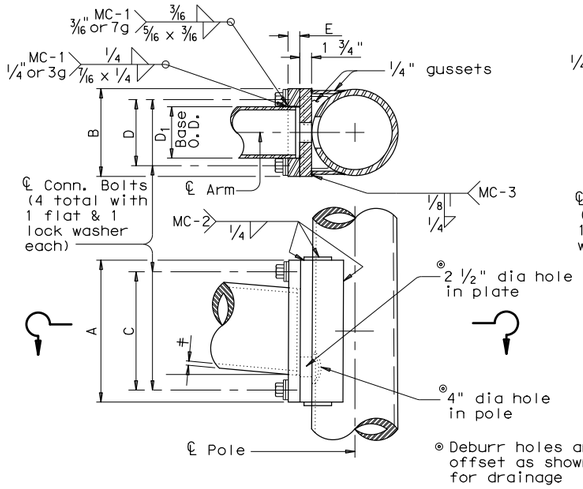

FIXED MOUNT DETAIL 1

ARM SIZE D_1	‡	A	F	CONN. BOLTS No.	CONN. BOLTS Dia	PIN BOLTS No.	PIN BOLTS Dia
in.	in.	in.	in.	ea.	in.	ea.	in.
6.5	.179	12	6	4	1	2	5/8
7.5	.179	14	8	4	1	2	5/8
8.0	.179	14	8	4	1	2	5/8
9.0	.179	16	10	4	1	2	5/8
9.5	.179	18	12	4	1 1/4	3	5/8
9.5	.239	18	12	4	1 1/4	3	5/8
10.0	.239	18	12	4	1 1/4	3	5/8

ARM SIZE D_1	‡	A	B	C	D	E	CONN BOLT DIA
in.	in.	in.	in.	in.	in.	in.	in.
7.0	.179	11	11	8	8	1 ¾	1 ¼
7.5	.179	11	11	8	8	1 ¾	1 ¼
8.0	.179	11	11	8	8	2	1 ¼
9.0	.179	13	13	10	10	2	1 ¼
10.0	.179	13	13	10	10	2	1 ¼
9.5	.239	13	13	10	10	2	1 ¼
10.0	.239	14	14	11	11	2	1 ½
11.0	.239	14	14	11	11	3	1 ½
11.5	.239	14	14	11	11	3	1 ½

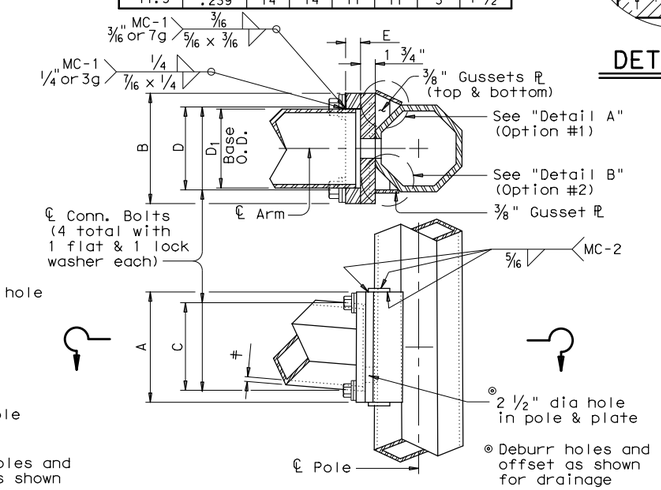

FIXED MOUNT DETAIL 2

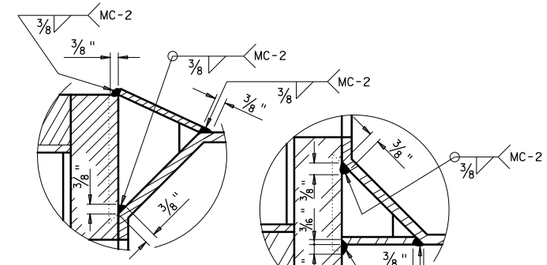

DETAIL A

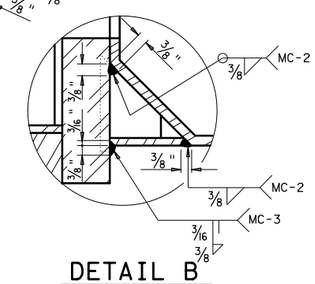

DETAIL B

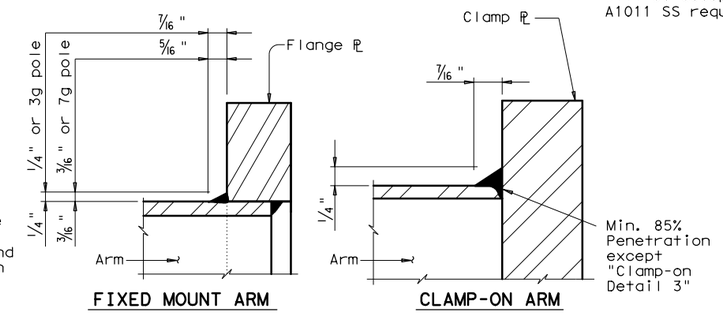

FIXED MOUNT ARM

CLAMP-ON ARM

ARM BASE WELD DETAILS

ARM SIZE D_1	‡	A	F	CONN. BOLTS No.	CONN. BOLTS Dia	PIN BOLTS No.	PIN BOLTS Dia
in.	in.	in.	in.	ea.	in.	ea.	in.
6.5	.179	12	6	4	1	2	5/8
7.5	.179	14	8	4	1	2	5/8
8.0	.179	14	8	4	1	2	5/8
9.0	.179	16	10	4	1	2	5/8
9.5	.179	18	12	6	1	3	5/8
9.5	.239	18	12	6	1	3	5/8
10.0	.239	18	12	6	1	3	5/8

MATERIALS	
Round Shafts or Polygonal Shafts ①	ASTM A595 Gr.A, A588, A1008 HSLAS Gr.50 Class 2, A1011 HSLAS Gr.50 Class 2, A572 Gr.50 or A1011 SS Gr.50 ②
Plates ①	ASTM A36, A588, or A572 Gr.50
Connection Bolts	ASTM A325 or A449, except where noted
Pin Bolts	ASTM A325
Pipe ①	ASTM A53 Gr.B, A501, A1008 HSLAS-F Gr.50, A1011 HSLAS-F Gr.50
Misc. Hardware	Galvanized steel or stainless steel or as noted

① ASTM A572, A1008 HSLAS, A1011 HSLAS, A1008 HSLAS-F, A1011 HSLAS-F or A1011 SS may have higher yield strengths but shall not have less elongation than the grade indicated.

② ASTM A1011 SS Gr.50 material shall also have a minimum elongation of 18 percent in 8 inches or 23 percent in 2 inches. Material thickness in excess of those stipulated under A1011 SS will be acceptable providing the material meets all other A1011 SS requirements and the requirements of this item.

GENERAL NOTES:

Clamp-on details are used for the second arm on dual mast arm assemblies. A Maximum 1 ½" wide vertical slotted hole shall be cut in the front clamp plate to facilitate drainage during galvanizing. The slot shall be centered behind the arm and shall be no longer than the arm diameter minus 1"

Fixed mount details are used for single mast arm assemblies and for the first arm on dual mast arm assemblies.

Where duplicate parts occur on a detail, welds shown for one part shall apply to all similar parts on the detail.

Pin bolts are required to prevent rotation of clamp-on arms under design wind forces.

NOTE:

Pin bolts shall be A325 with threads excluded from the shear plane. Pin bolt and ¾" dia pipe shall have 9/16" dia holes for a 1/8" dia galvanized cotter pin. Back clamp plate shall be furnished with a ¾" dia hole for each pin bolt. An 11/16" dia hole for each pin bolt shall be field drilled through the pole after arm orientations have been approved by the Engineer.

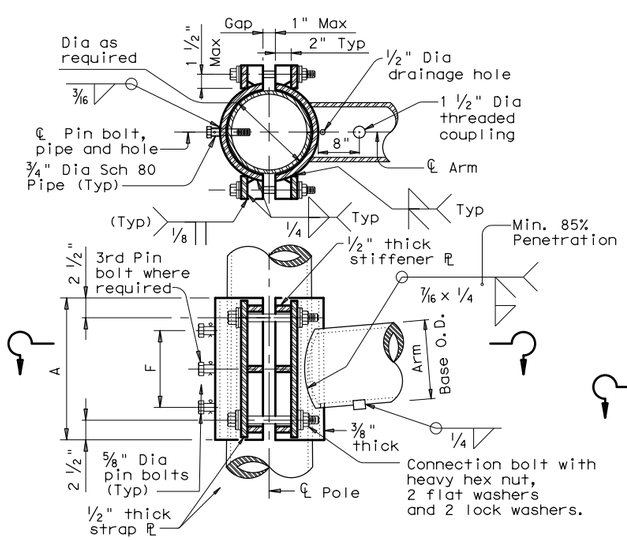

CLAMP-ON DETAIL 1

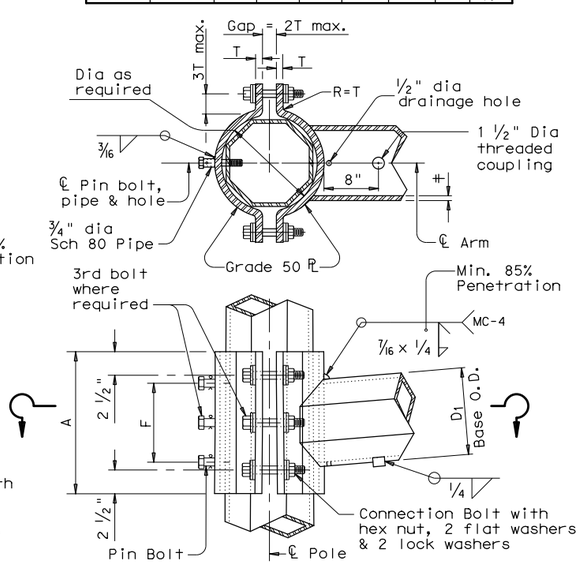

CLAMP-ON DETAIL 2

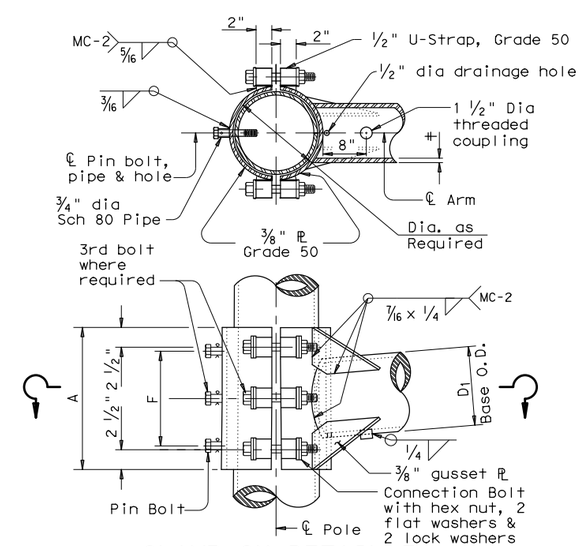

CLAMP-ON DETAIL 3

Texas Department of Transportation
Traffic Operations Division

STANDARD ASSEMBLY FOR TRAFFIC SIGNAL SUPPORT STRUCTURES

MAST ARM CONNECTIONS

MA-C-12

© TxDOT August 1995

REVISIONS	DN: MS	CK: JSY	DW: MMF	CK: JSY
5-96 5-09 1-12	CONT	SECT	JOB	HIGHWAY
	--	--	--	--
	DIST	COUNTY		SHEET NO.
	--	--		174

126A

DATE: 9/28/2020 1:27:31 PM
FILE: ...\CADD\SHEETS\SGSD*mac.dgn

DISCLAIMER: The use of this standard is governed by the "Texas Engineering Practice Act". No warranty of any kind is made by TxDOT for any purpose whatsoever. TxDOT assumes no responsibility for the conversion of this standard to other formats or for incorrect results or damages resulting from its use.

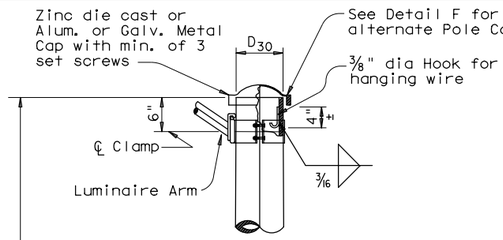

DETAIL A

(for pole with luminaire)

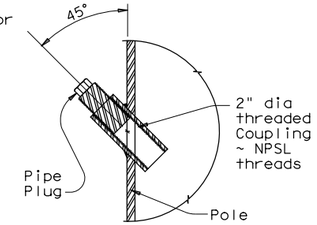

POLE COUPLING DETAIL

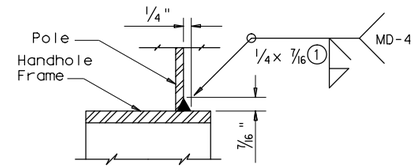

DETAIL G

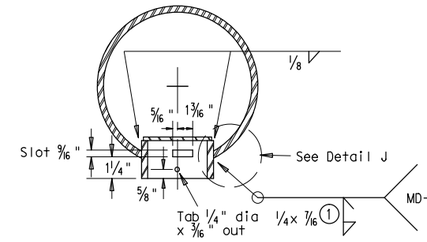

SECTION X-X

Opening for access compartment shall be no more than 1/16 inch wider than the access compartment itself.

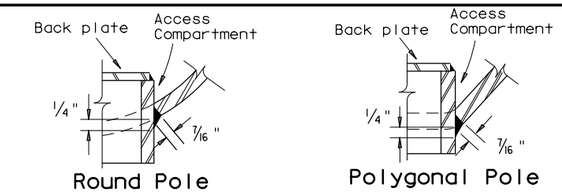

DETAIL J

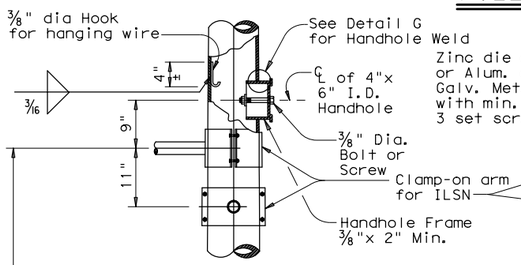

DETAIL B

(If ILSN applied)

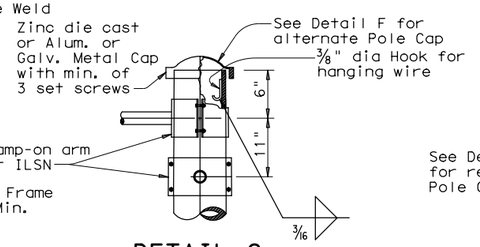

DETAIL C

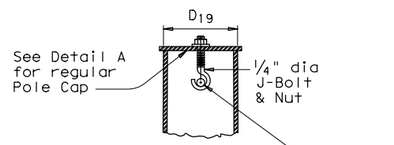

SECTION Y-Y

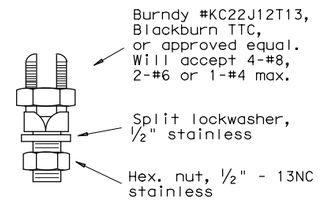

COPPER GROUND CONNECTOR

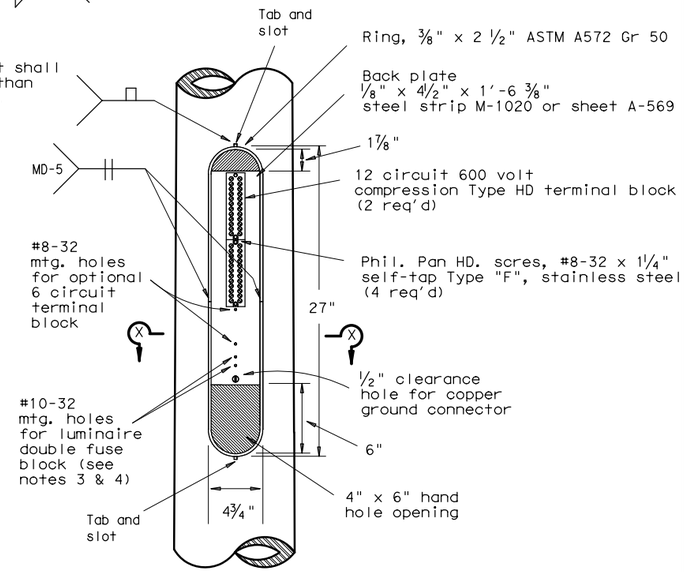

ACCESS COMPARTMENT

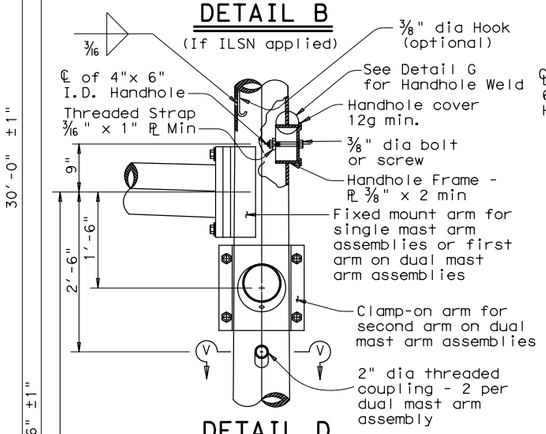

DETAIL D

(for 30' pole with luminaire and ILSN sign)

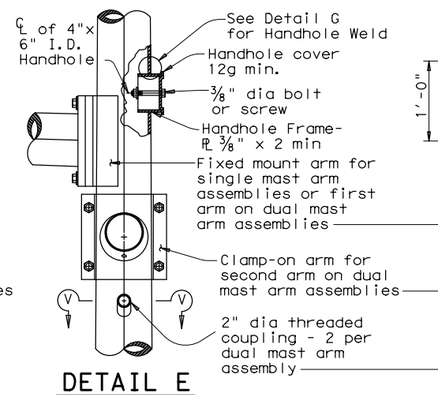

DETAIL E

(for 24' pole with ILSN sign and no luminaire)

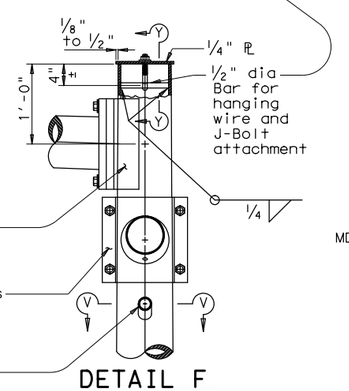

DETAIL F

(for 19' pole with no ILSN sign and no luminaire)

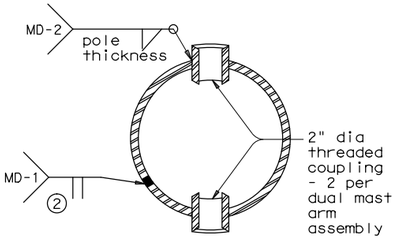

SECTION V-V

Anchor Bolt Diameter	Bolt Hole Diameter	Slot Length	Bolt Circle Diameter	Base PL Dim. L x T	Adjust. Range
1 1/2"	1 3/4"	3 1/2"	17"	18" x 1 1/2"	13.4°
1 3/4"	2"	4"	19"	20" x 1 3/4"	13.5°
2"	2 1/4"	4 1/2"	21"	22" x 2"	13.6°
2 1/4"	2 1/2"	5"	23"	24" x 2 1/4"	13.7°

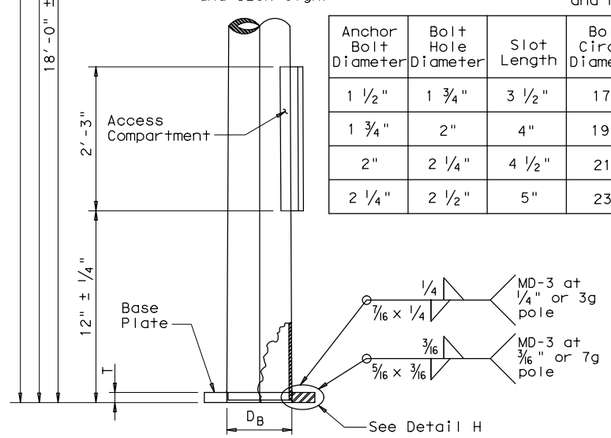

POLE ELEVATION

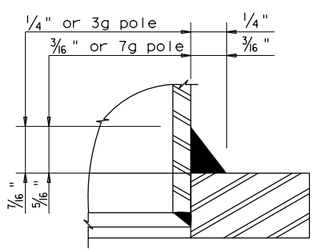

DETAIL H

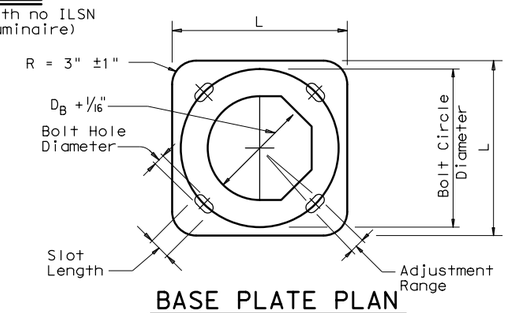

BASE PLATE PLAN

(1) 85% Min. penetration

(2) 60% Min. penetration 100% pemetration within 6" of circumferential base welds.

NOTES:

1. The cover shall be one piece formed from ABS plastic, shall be a pearl gray color, and shall be suitable for exposure to harsh sunlight and extreme weather. Cover shall latch with two screw latches and shall fit tightly to the enclosure ring to create a rainproof seal. Latch screws shall be 1/4-20 stainless flat socket head screws with tamper proof feature.
2. The pole manufacturer shall provide with each pole a separate kit consisting of: one cover with two latching assemblies, two terminal strips (Marathon #985GP12CU or approved equal), four #8-32 x 1 1/4" self tapping type "F" stainless steel pan head screws, and one ground connector (Blackburn TTC, Burndy KC22J12T13, or Ilsco SSS-5). The traffic signal contractor shall install the kit items in the field.
3. The screw hole spacing on the enclosure back plate shall be for two Marathon #985GP12 terminal strips, one Marathon #985GP06CU terminal strip, and one Bussmann #BM6032B fuse block.
4. Install one Bussmann #BM6032B, Littelfuse #L60030M-2C, or Ferraz-Shawmut #30352 fuse block for poles where luminaires are to be installed.

Texas Department of Transportation
Traffic Operations Division

TRAFFIC SIGNAL SUPPORT STRUCTURES MAST ARM POLE DETAILS

MA-D-12

© TxDOT August 1995

DN: MS	CK: JSY	DW: FDN	CK: CAL
CONT	SECT	JOB	HIGHWAY
--	--	--	--
DIST		COUNTY	SHEET NO.
--		--	175

REVISIONS
8-99
1-12

DATE: 9/28/2020 1:27:32 PM
FILE: ...\CADD\SHEETS\SGSD*mad.dgn

DISCLAIMER: The use of this standard is governed by the "Texas Engineering Practice Act". No warranty of any kind is made by TxDOT for any purpose whatsoever. TxDOT assumes no responsibility for the conversion of this standard to other formats or for incorrect results or damages resulting from its use.

MATERIALS	
Pole or Arm Simplex	ASTM A27 Gr.65-35 or A148 Gr.80-50, A576 Gr.1021 ③, or A36 (Arm only)
Arm Pipes	ASTM A53 Gr.B, A501, A1008 HSLAS-F Gr.50 ④, or A1011 HSLAS-F Gr.50 ④
Arm Strut Plates ②	ASTM A36, A572 Gr.50 ④, or A588
Misc.	ASTM designations as noted

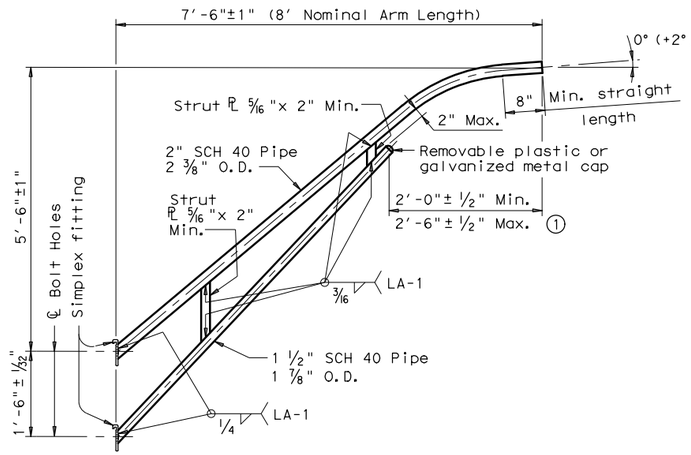

8-FOOT LUMINAIRE ARM

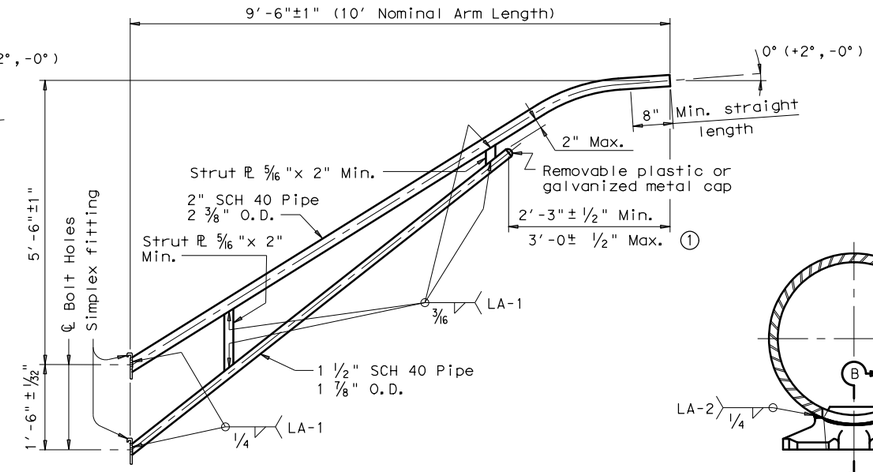

10-FOOT LUMINAIRE ARM

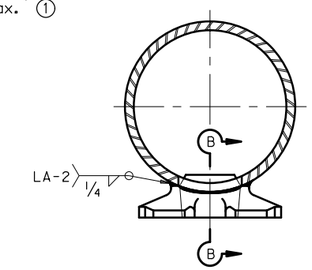

DIRECT ATTACHMENT DETAIL

① Dimensional limits are given to show acceptable variation in design. All of a Fabricator's production of a particular arm length shall have the same dimensions within specified tolerances.

② Any of the materials listed for plates may be used where the drawings do not specify a particular ASTM designation.

③ A576 must be suitable for forging and also meet minimum tensile strength of 65 ksi, minimum yield of 35 ksi, and elongation in 2 inches of 22 percent.

④ ASTM A572, A1008 HSLAS-F, and A1011 HSLAS-F may have higher yield strengths but shall not have less elongation than the grade indicated.

GENERAL NOTES:

Design conforms to 1994 AASHTO Standard Specifications for Structural Supports for Highway Signs, Luminaires, and Traffic Signals and Interim Revisions thereto. Design Wind Speed equals 90 mph plus a 1.3 gust factor. Arms are designed to support a 60 lb. luminaire having an effective projected area (actual area times drag coefficient) of 1.6 sq. ft.

Materials and fabrication shall be in accordance with Item 686, "Traffic Signal Pole Assemblies (Steel)" and with the details, dimensions, and weld procedures shown herein. Weld references call for preapproved weld procedures which the Fabricator must obtain prior to fabrication. In the absense of specified Fabricaton tolerances, dimensions shall be within the tolerances generally obtainable in normal fabrication practice.

Unless otherwise noted, all parts shall be galvanized after fabrication in accordance with Item 445, "Galvanizing".

Deviation from the details and dimensions shown herein require submission of shop drawings in accordance with Item 441, "Steel Structures". Alternate designs are not acceptable.

Each pole simplex fitting shall be supplied with 2 ASTM A325 bolts and 2 lock washers of the size specified. The bolts and lock washers shall be secured to the pole with the other hardware items called for in the plans. When clamp attachment is specified, the Fabricator shall ship the clamp assembly securely attached to the pole at the location shown on the plans.

If clamp assemblies are ordered without poles, the Fabricator shall ship one upper and one lower clamp assembly together in a single package, including all nuts and washers required for the clamps and simplex fittings.

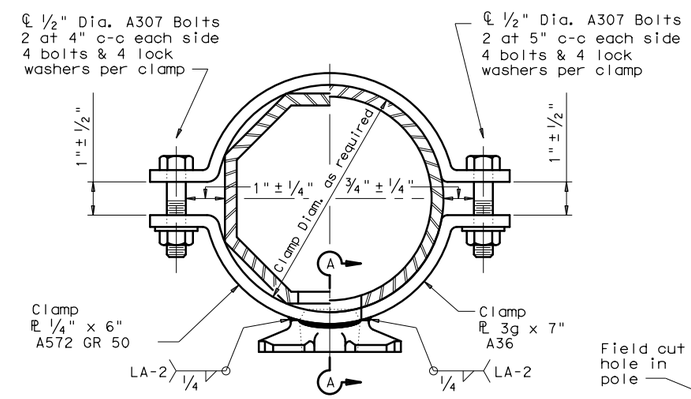

CLAMP ATTACHMENT DETAIL NO. 1
(HALF SECTION)

CLAMP ATTACHMENT DETAIL NO. 2
(HALF SECTION)

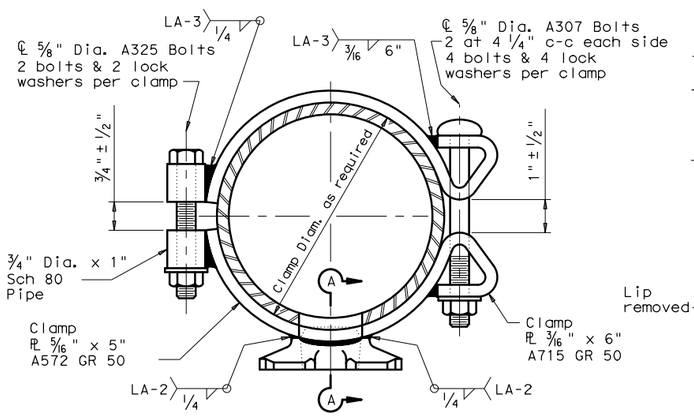

CLAMP ATTACHMENT DETAIL NO. 3
(HALF SECTION)

CLAMP ATTACHMENT DETAIL NO. 4
(HALF SECTION)

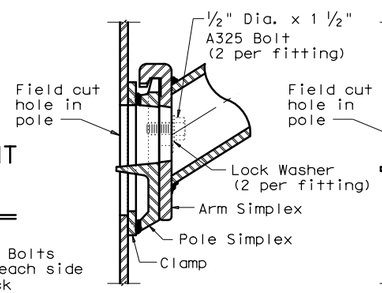

UPPER SIMPLEX FITTING

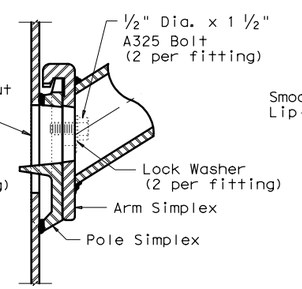

UPPER SIMPLEX FITTING

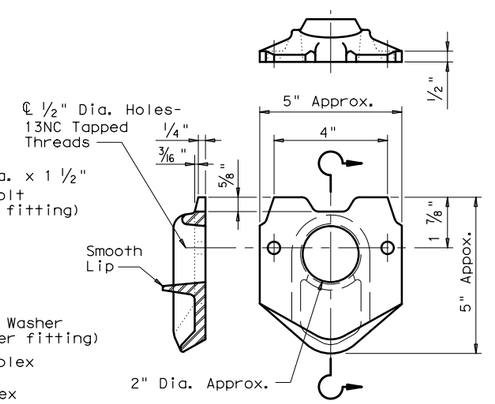

POLE SIMPLEX DETAIL

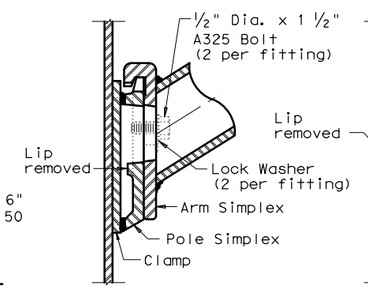

LOWER SIMPLEX FITTING

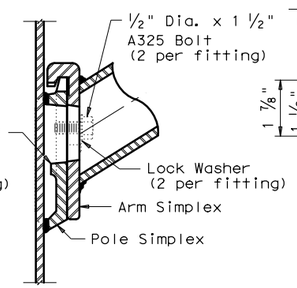

LOWER SIMPLEX FITTING

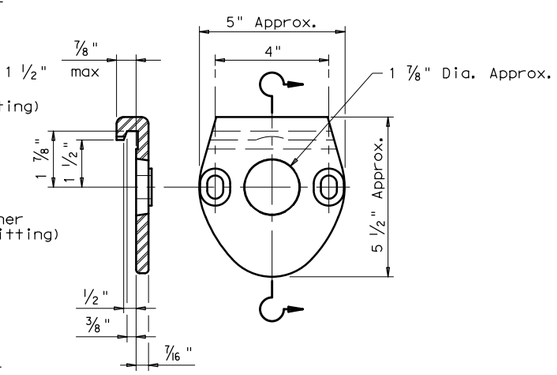

SECTON A-A

SECTON B-B

ARM SIMPLEX DETAIL

Texas Department of Transportation
Traffic Operations Division

STANDARD ASSEMBLY DRAWINGS FOR LUMINAIRE SUPPORT STRUCTURES

ARM DETAILS

LUM-A-12

© TxDOT August 1995

DN: LEH	CK: JSY	DW: LTT	CK: TEB
REVISIONS 5-96 1-99 1-12	CONT --	SECT --	JOB --	HIGHWAY --
	DIST --	COUNTY --	SHEET NO. 176

DATE: 9/28/2020 1:27:34 PM
FILE: ...\CADD\SHEETS\SGSD*lum-a.dgn

DISCLAIMER: The use of this standard is governed by the "Texas Engineering Practice Act". No warranty of any kind is made by TxDOT for any purpose whatsoever. TxDOT assumes no responsibility for the conversion of this standard to other formats or for incorrect results or damages resulting from its use.

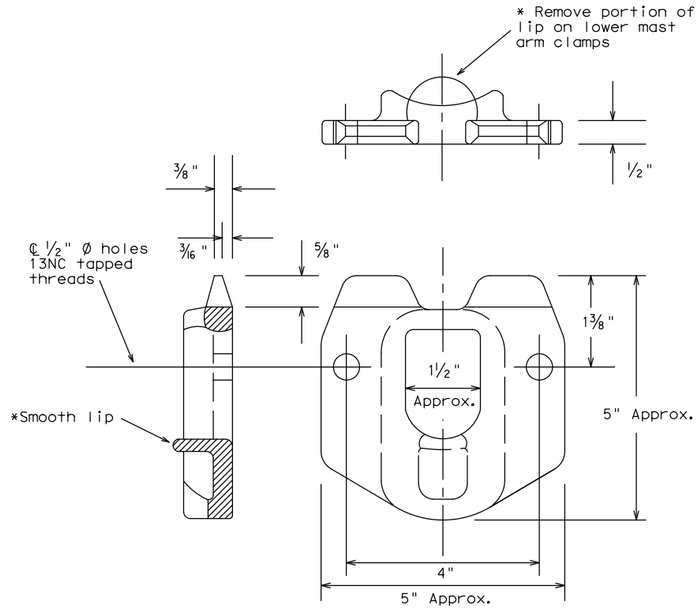

POLE SIMPLEX DETAILS

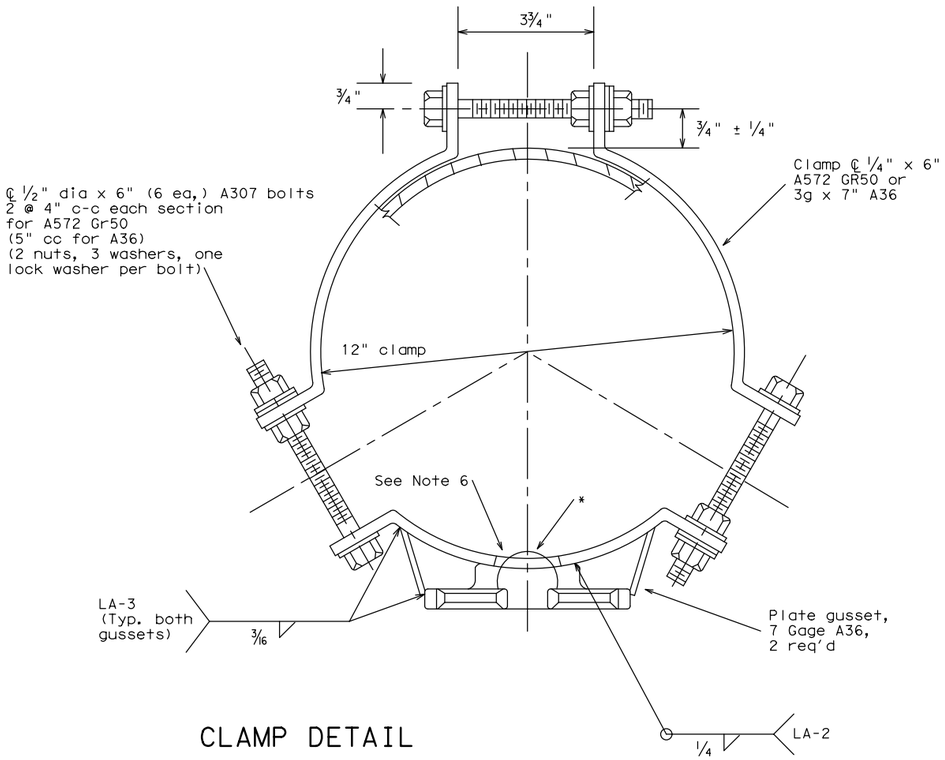

CLAMP DETAIL

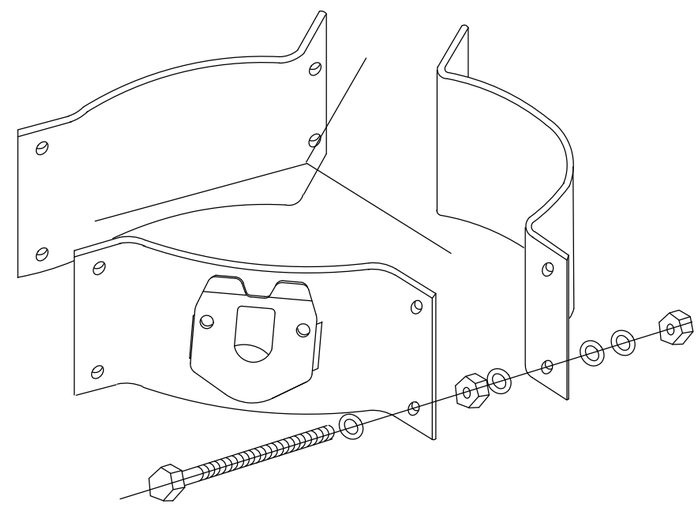

PROJECTION

OTHER MATERIALS:

1. Pole simplex shall be ASTM A27 GR65-35 or A148 GR80-50 or A576 GR1021. ASTM A576 must be suitable for forging and also meet minimum tensile of 65ksi, minimum yield of 35ksi, and a minimum elongation of 22 percent in 2 inches.
2. Welded tabs and backplates shall be ASTM A-36 steel or better.
3. Nylon insert locknuts shall conform to ASTM A563.

GENERAL NOTES:

1. Materials and fabrication shall be in accordance with Standard Sheet "MA-C" and with the details, dimensions, and weld procedures shown herein. Weld references call for preapproved weld procedures which the Fabricator must obtain prior to fabrication. In the absence of specified fabrication tolerances, dimensions shall be within the tolerances generally obtainable in normal fabrication practice.
2. All parts shall be galvanized after fabrication in accordance with Item 445, "Galvanizing". The throat of the Simplex shall be made free of all rough or sharp edges resulting from the galvanizing process.
3. Each simplex fitting shall be supplied with 2 ASTM A325 bolts, ½in. X 1½in. and 2 lock washers. The bolts and lock washers shall be secured to the clamp with the other hardware items. The Fabricator shall ship clamp assembly together in a single package, including all bolts, nuts, and washers required for the clamp and simplex fitting.
4. Design conforms to 1994 AASHTO "Standard Specifications for Structural Supports for Highway Signs, Luminaires, and Traffic Signals" and interim revisions thereto. Design Wind Speed equals 80 mph plus a 1.3 gust factor. Clamps are designed to support a 60 lb. luminaire having an effective projected area (actual area times drag coefficient) of 1.6 sq.ft.,12 ft. maximum arm length.
5. Each assembly shall consist of one upper piece simplex fitting having a smooth lip and one lower piece simplex fitting with the lip removed.
6. Approximately 2 in. diameter hole in upper mast arm clamp.

For 8.9 - 12 inch diameter Signal Poles
(Two req'd for each mast arm)

Texas Department of Transportation
Traffic Operations Division

CLAMP ON
FITTING ASSEMBLY FOR
LUMINAIRE MAST ARM

CFA-12

© TxDOT	DN: KAB	CK: RES	DW: FDN	CK: CAL
REVISIONS	CONT	SECT	JOB	HIGHWAY
11-99	--	--	--	--
1-12				
	DIST	COUNTY		SHEET NO.
	--	--		177

DATE: 9/28/2020 1:27:35 PM
FILE: ...\CADD\SHEETS\SGSD*cfa.dgn