C5S

Section	Title	Page
01.0	**Design Introduction**	
1.01	Cover Page	1
1.02	Block Diagram	2
02.0	**Cyclone V EP5CSXFC6DF31**	
02.01	BANK3 & BANK4	3
02.02	BANK5 & BANK6	4
02.03	BANK7 & BANK8	5
02.04	Clock & GND	6
02.05	Transceiver	7
02.06	Power & Config	8
03.0	**JTAG**	
03.01	USB Blaster II	9
03.02	JTAG Chain	10
04.0	**Expansion Port**	
04.01	HSMC	11
05.0	**Memory**	
05.01	DDR3L SDRAM For FPGA	13
05.02	DDR3L SDRAM For HPS	14

Section	Title	Page
06.0	**Memory 2**	
06.01	QSPI FLASH For FPGA	15
06.02	QSPI FLASH For HPS	16
07.0	**LCD & Temp sensor & IRM**	
07.01	LCD & Temp sensor & IRM	17
08.0	**VGA & Audio**	
08.01	VGA ADV7123	18
08.02	Audio SSM2603	19
09.0	**FPGA & HPS IO**	
09.01	LED & BUTTON & SWITCH For FPGA	20
09.02	LED & BUTTON & SWITCH For HPS	21
10.0	**USB & SD CARD & UART**	
10.01	UART TO USB & SD CARD	22
10.02	ULPI PHY USB3300	23
11.0	**TSE PHY**	
11.01	TSE PHY KSZ9021RN	24
12.0	**LTC Connector & G Sensor**	
12.01	LTC Connector & G Sensor	25

Section	Title	Page
13.0	**System Power**	
13.01	9V & 5V	26
13.02	1.1V & 1.2V	27
13.03	3.3V & 2.5V	28
13.04	1.5V	29
13.05	HSMC_VCCIO	30

Copyright (c) 2013 by Terasic Technologies Inc. Taiwan.
All rights reserved.
No part of this schematic design may be reproduced, duplicated, or used without the prior written permission of Terasic.

Title: C5S Board		
Size: B	Document Number: Cover Page	Rev: A
Date: Tuesday, May 07, 2013	Sheet 1 of 30	

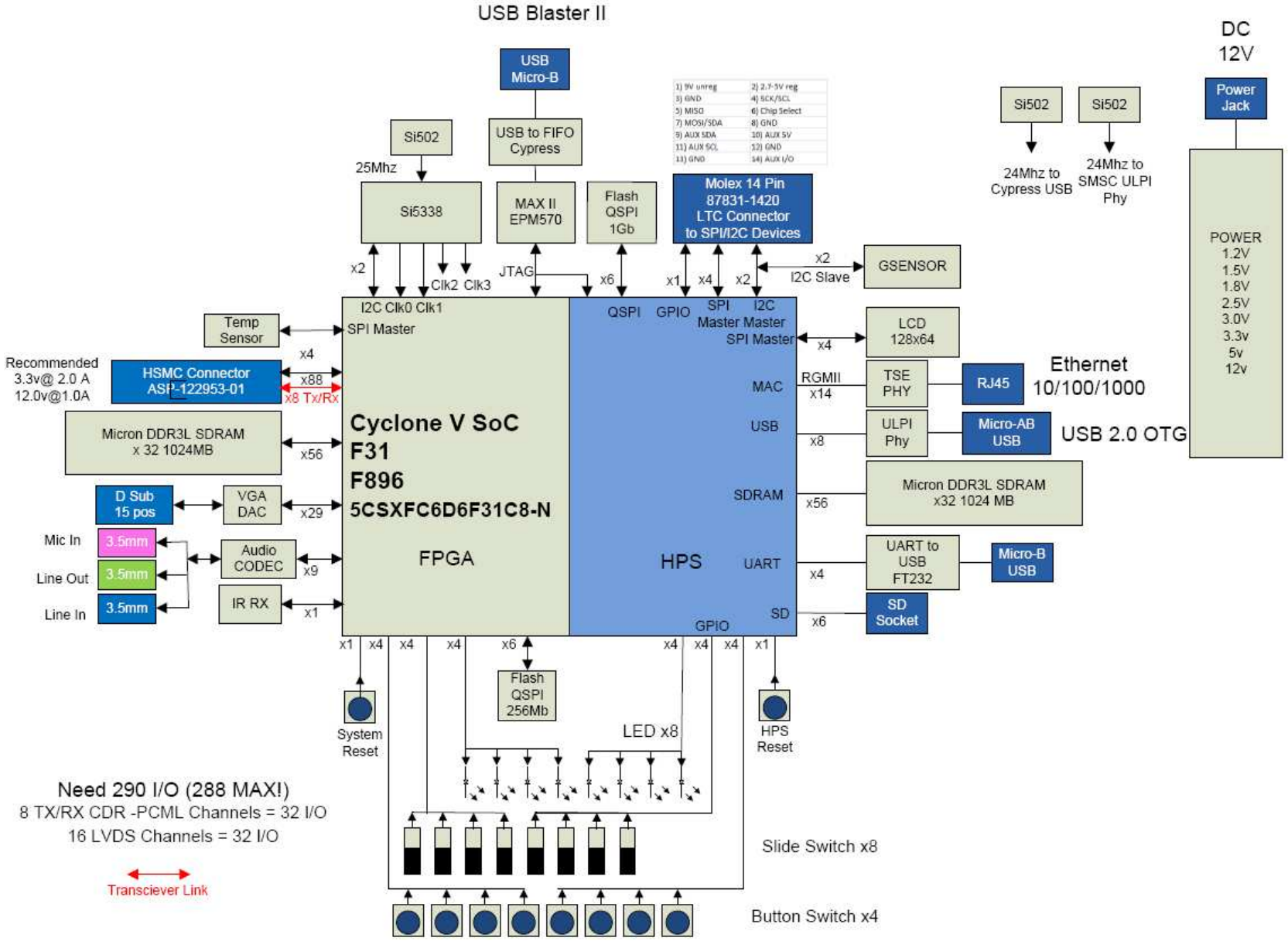

Copyright (c) 2013 by Terasic Technologies Inc. Taiwan.
All rights reserved.
No part of this schematic design may be reproduced, duplicated, or used without the prior written permission of Terasic.

Title	C5S Board	
Size B	Document Number Block Diagram	Rev A
Date: Tuesday, May 07, 2013	Sheet 2 of 30	

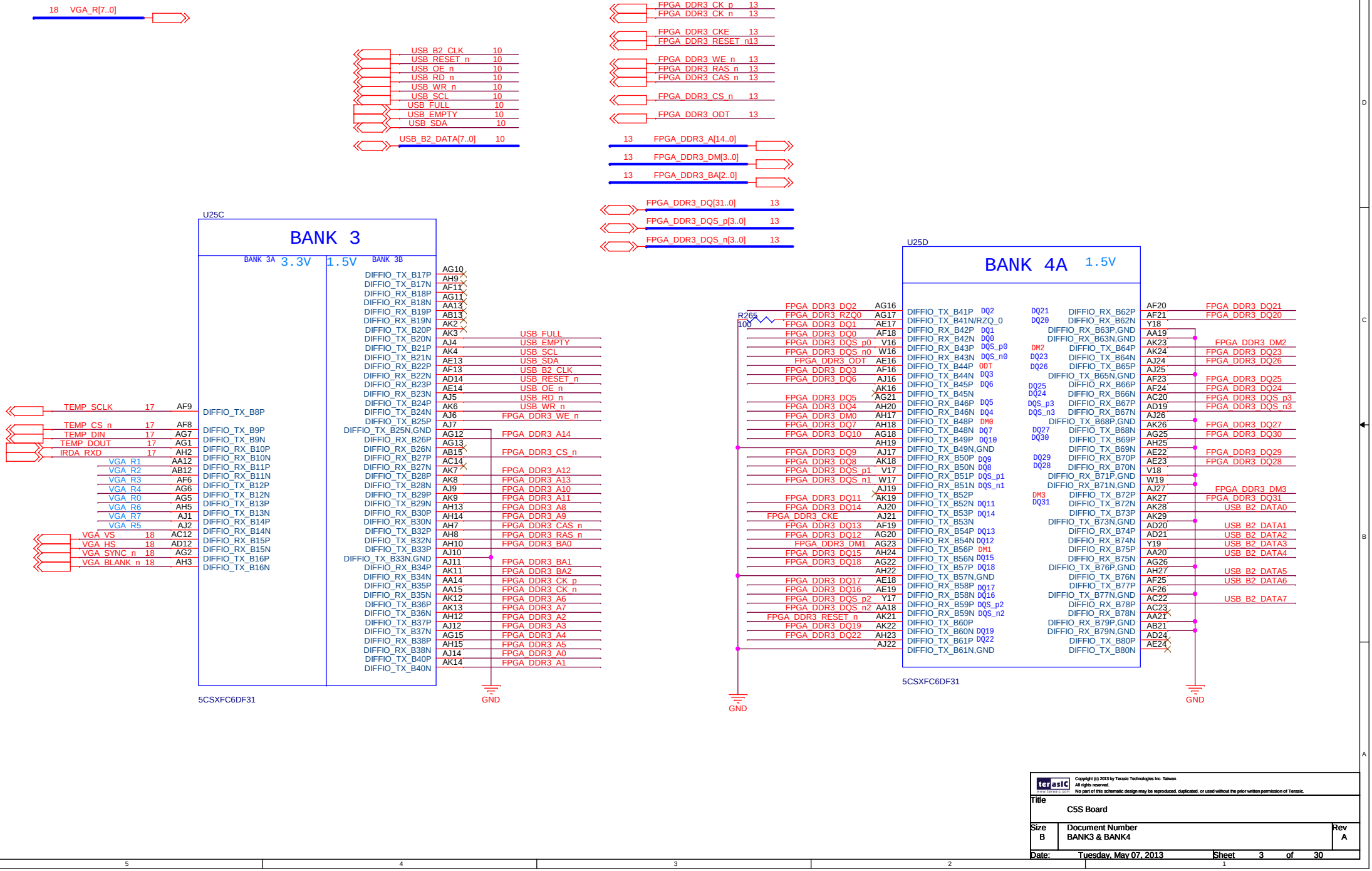
18 VGA_R[7..0]
USB_B2_CLK 10
USB_RESET_n 10
USB_OE_n 10
USB_RD_n 10
USB_WR_n 10
USB_SCL 10
USB_FULL 10
USB_EMPTY 10
USB_SDA 10
USB_B2_DATA[7..0] 10
FPGA_DDR3_CK_p 13
FPGA_DDR3_CK_n 13
FPGA_DDR3_CKE 13
FPGA_DDR3_RESET_n 13
FPGA_DDR3_WE_n 13
FPGA_DDR3_RAS_n 13
FPGA_DDR3_CAS_n 13
FPGA_DDR3_CS_n 13
FPGA_DDR3_ODT 13
13 FPGA_DDR3_A[14..0]
13 FPGA_DDR3_DM[3..0]
13 FPGA_DDR3_BA[2..0]
FPGA_DDR3_DQ[31..0] 13
FPGA_DDR3_DQS_p[3..0] 13
FPGA_DDR3_DQS_n[3..0] 13
U25C
BANK 3
BANK 3A 3.3V
1.5V BANK 3B
TEMP_SCLK 17 AF9
TEMP_CS_n 17 AF8
TEMP_DIN 17 AG7
TEMP_DOUT 17 AG1
IRDA_RXD 17 AH2
VGA_R1 AA12
VGA_R2 AB12
VGA_R3 AF6
VGA_R4 AG6
VGA_R0 AG5
VGA_R6 AH5
VGA_R7 AJ1
VGA_R5 AJ2
VGA_VS 18 AC12
VGA_HS 18 AD12
VGA_SYNC_n 18 AG2
VGA_BLANK_n 18 AH3
DIFFIO_TX_B8P
DIFFIO_TX_B9P
DIFFIO_TX_B9N
DIFFIO_RX_B10P
DIFFIO_RX_B10N
DIFFIO_RX_B11P
DIFFIO_RX_B11N
DIFFIO_TX_B12P
DIFFIO_TX_B12N
DIFFIO_TX_B13P
DIFFIO_TX_B13N
DIFFIO_RX_B14P
DIFFIO_RX_B14N
DIFFIO_RX_B15P
DIFFIO_RX_B15N
DIFFIO_TX_B16P
DIFFIO_TX_B16N
DIFFIO_TX_B17P AG10
DIFFIO_TX_B17N AH9
DIFFIO_RX_B18P AF11
DIFFIO_RX_B18N AG11
DIFFIO_RX_B19P AA13
DIFFIO_RX_B19N AB13
DIFFIO_TX_B20P AK2
DIFFIO_TX_B20N AK3 USB_FULL
DIFFIO_TX_B21P AJ4 USB_EMPTY
DIFFIO_TX_B21N AK4 USB_SCL
DIFFIO_RX_B22P AE13 USB_SDA
DIFFIO_RX_B22N AF13 USB_B2_CLK
DIFFIO_RX_B23P AD14 USB_RESET_n
DIFFIO_RX_B23N AE14 USB_OE_n
DIFFIO_TX_B24P AJ5 USB_RD_n
DIFFIO_TX_B24N AK6 USB_WR_n
DIFFIO_TX_B25P AJ6 FPGA_DDR3_WE_n
DIFFIO_TX_B25N,GND AJ7
DIFFIO_RX_B26P AG12 FPGA_DDR3_A14
DIFFIO_RX_B26N AG13
DIFFIO_RX_B27P AB15 FPGA_DDR3_CS_n
DIFFIO_RX_B27N AC14
DIFFIO_TX_B28P AK7 FPGA_DDR3_A12
DIFFIO_TX_B28N AK8 FPGA_DDR3_A13
DIFFIO_TX_B29P AJ9 FPGA_DDR3_A10
DIFFIO_TX_B29N AK9 FPGA_DDR3_A11
DIFFIO_RX_B30P AH13 FPGA_DDR3_A8
DIFFIO_RX_B30N AH14 FPGA_DDR3_A9
DIFFIO_TX_B32P AH7 FPGA_DDR3_CAS_n
DIFFIO_TX_B32N AH8 FPGA_DDR3_RAS_n
DIFFIO_TX_B33P AH10 FPGA_DDR3_BA0
DIFFIO_TX_B33N,GND AJ10
DIFFIO_RX_B34P AJ11 FPGA_DDR3_BA1
DIFFIO_RX_B34N AK11 FPGA_DDR3_BA2
DIFFIO_RX_B35P AA14 FPGA_DDR3_CK_p
DIFFIO_RX_B35N AA15 FPGA_DDR3_CK_n
DIFFIO_TX_B36P AK12 FPGA_DDR3_A6
DIFFIO_TX_B36N AK13 FPGA_DDR3_A7
DIFFIO_TX_B37P AH12 FPGA_DDR3_A2
DIFFIO_TX_B37N AJ12 FPGA_DDR3_A3
DIFFIO_RX_B38P AG15 FPGA_DDR3_A4
DIFFIO_RX_B38N AH15 FPGA_DDR3_A5
DIFFIO_TX_B40P AJ14 FPGA_DDR3_A0
DIFFIO_TX_B40N AK14 FPGA_DDR3_A1
GND
5CSXFC6DF31
U25D
BANK 4A 1.5V
R265 100
FPGA_DDR3_DQ2 AG16
FPGA_DDR3_RZQ0 AG17
FPGA_DDR3_DQ1 AE17
FPGA_DDR3_DQ0 AF18
FPGA_DDR3_DQS_p0 V16
FPGA_DDR3_DQS_n0 W16
FPGA_DDR3_ODT AE16
FPGA_DDR3_DQ3 AF16
FPGA_DDR3_DQ6 AJ16
AK16
FPGA_DDR3_DQ5 AG21
FPGA_DDR3_DQ4 AH20
FPGA_DDR3_DM0 AH17
FPGA_DDR3_DQ7 AH18
FPGA_DDR3_DQ10 AG18
AH19
FPGA_DDR3_DQ9 AJ17
FPGA_DDR3_DQ8 AK18
FPGA_DDR3_DQS_p1 V17
FPGA_DDR3_DQS_n1 W17
AJ19
FPGA_DDR3_DQ11 AK19
FPGA_DDR3_DQ14 AJ20
FPGA_DDR3_CKE AJ21
FPGA_DDR3_DQ13 AF19
FPGA_DDR3_DQ12 AG20
FPGA_DDR3_DM1 AG23
FPGA_DDR3_DQ15 AH24
FPGA_DDR3_DQ18 AG22
AH22
FPGA_DDR3_DQ17 AE18
FPGA_DDR3_DQ16 AE19
FPGA_DDR3_DQS_p2 Y17
FPGA_DDR3_DQS_n2 AA18
FPGA_DDR3_RESET_n AK21
FPGA_DDR3_DQ19 AK22
FPGA_DDR3_DQ22 AH23
AJ22
DIFFIO_TX_B41P DQ2
DIFFIO_TX_B41N/RZQ_0
DIFFIO_RX_B42P DQ1
DIFFIO_RX_B42N DQ0
DIFFIO_RX_B43P DQS_p0
DIFFIO_RX_B43N DQS_n0
DIFFIO_TX_B44P ODT
DIFFIO_TX_B44N DQ3
DIFFIO_TX_B45P DQ6
DIFFIO_TX_B45N
DIFFIO_RX_B46P DQ5
DIFFIO_RX_B46N DQ4
DIFFIO_TX_B48P DM0
DIFFIO_TX_B48N DQ7
DIFFIO_TX_B49P DQ10
DIFFIO_TX_B49N,GND
DIFFIO_RX_B50P DQ9
DIFFIO_RX_B50N DQ8
DIFFIO_RX_B51P DQS_p1
DIFFIO_RX_B51N DQS_n1
DIFFIO_TX_B52P
DIFFIO_TX_B52N DQ11
DIFFIO_TX_B53P DQ14
DIFFIO_TX_B53N
DIFFIO_RX_B54P DQ13
DIFFIO_RX_B54N DQ12
DIFFIO_TX_B56P DM1
DIFFIO_TX_B56N DQ15
DIFFIO_TX_B57P DQ18
DIFFIO_TX_B57N,GND
DIFFIO_RX_B58P DQ17
DIFFIO_RX_B58N DQ16
DIFFIO_RX_B59P DQS_p2
DIFFIO_RX_B59N DQS_n2
DIFFIO_TX_B60P
DIFFIO_TX_B60N DQ19
DIFFIO_TX_B61P DQ22
DIFFIO_TX_B61N,GND
DQ21 DIFFIO_RX_B62P AF20 FPGA_DDR3_DQ21
DQ20 DIFFIO_RX_B62N AF21 FPGA_DDR3_DQ20
DIFFIO_RX_B63P,GND Y18
DIFFIO_RX_B63N,GND AA19
DM2 DIFFIO_TX_B64P AK23 FPGA_DDR3_DM2
DQ23 DIFFIO_TX_B64N AK24 FPGA_DDR3_DQ23
DQ26 DIFFIO_TX_B65P AJ24 FPGA_DDR3_DQ26
DIFFIO_TX_B65N,GND AJ25
DQ25 DIFFIO_RX_B66P AF23 FPGA_DDR3_DQ25
DQ24 DIFFIO_RX_B66N AF24 FPGA_DDR3_DQ24
DQS_p3 DIFFIO_RX_B67P AC20 FPGA_DDR3_DQS_p3
DQS_n3 DIFFIO_RX_B67N AD19 FPGA_DDR3_DQS_n3
DIFFIO_TX_B68P,GND AJ26
DQ27 DIFFIO_TX_B68N AK26 FPGA_DDR3_DQ27
DQ30 DIFFIO_TX_B69P AG25 FPGA_DDR3_DQ30
DIFFIO_TX_B69N AH25
DQ29 DIFFIO_RX_B70P AE22 FPGA_DDR3_DQ29
DQ28 DIFFIO_RX_B70N AE23 FPGA_DDR3_DQ28
DIFFIO_RX_B71P,GND V18
DIFFIO_RX_B71N,GND W19
DM3 DIFFIO_TX_B72P AJ27 FPGA_DDR3_DM3
DQ31 DIFFIO_TX_B72N AK27 FPGA_DDR3_DQ31
DIFFIO_TX_B73P AK28 USB_B2_DATA0
DIFFIO_TX_B73N,GND AK29
DIFFIO_RX_B74P AD20 USB_B2_DATA1
DIFFIO_RX_B74N AD21 USB_B2_DATA2
DIFFIO_RX_B75P Y19 USB_B2_DATA3
DIFFIO_RX_B75N AA20 USB_B2_DATA4
DIFFIO_TX_B76P,GND AG26
DIFFIO_TX_B76N AH27 USB_B2_DATA5
DIFFIO_TX_B77P AF25 USB_B2_DATA6
DIFFIO_TX_B77N,GND AF26
DIFFIO_RX_B78P AC22 USB_B2_DATA7
DIFFIO_RX_B78N AC23
DIFFIO_RX_B79P,GND AA21
DIFFIO_RX_B79N,GND AB21
DIFFIO_TX_B80P AD24
DIFFIO_TX_B80N AE24
GND
5CSXFC6DF31
Copyright (c) 2013 by Terasic Technologies Inc. Taiwan.
All rights reserved.
No part of this schematic design may be reproduced, duplicated, or used without the prior written permission of Terasic.
Title
C5S Board
Size B
Document Number
BANK3 & BANK4
Rev A
Date: Tuesday, May 07, 2013
Sheet 3 of 30

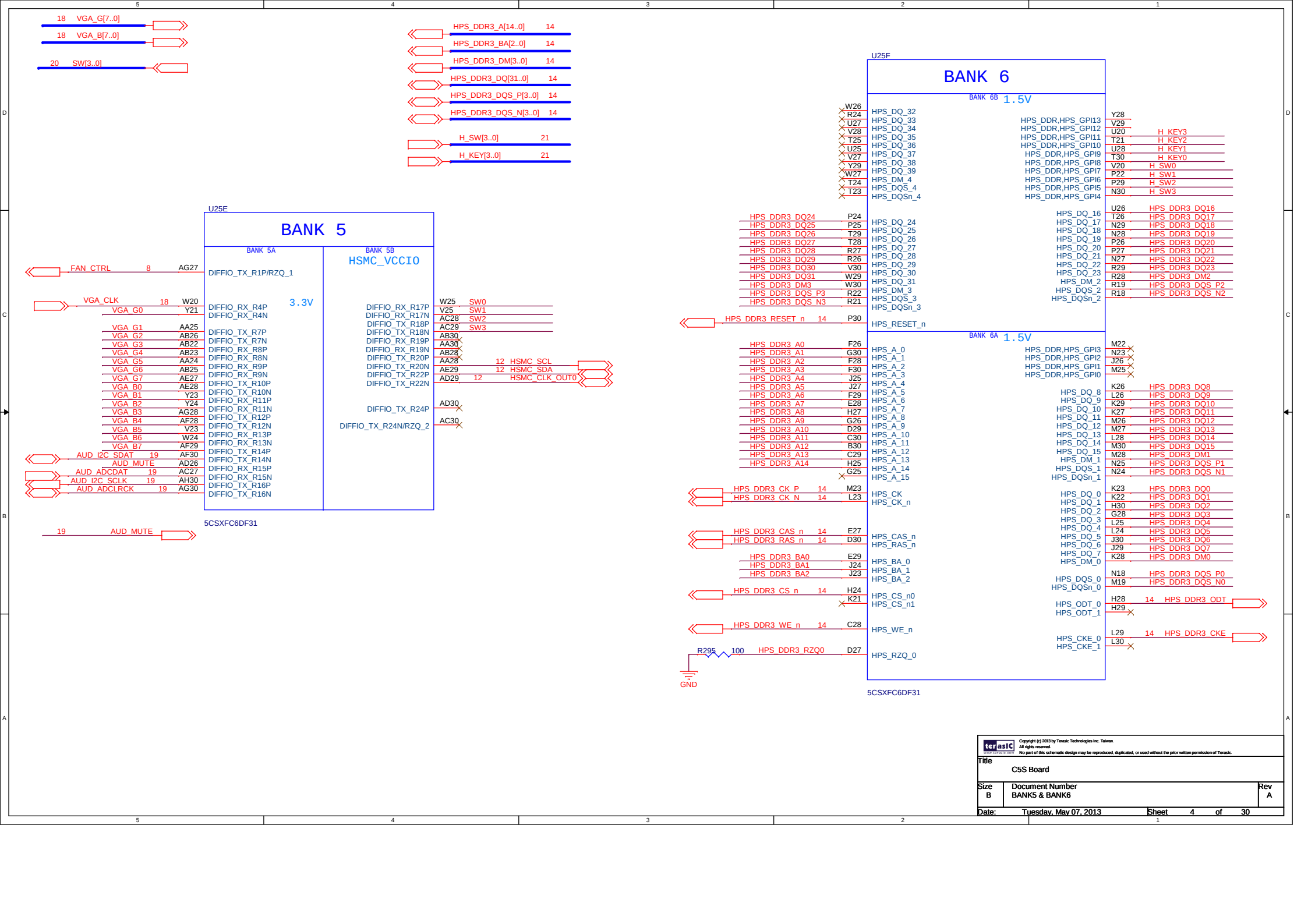
18 VGA_G[7..0]
18 VGA_B[7..0]
20 SW[3..0]
HPS_DDR3_A[14..0] 14
HPS_DDR3_BA[2..0] 14
HPS_DDR3_DM[3..0] 14
HPS_DDR3_DQ[31..0] 14
HPS_DDR3_DQS_P[3..0] 14
HPS_DDR3_DQS_N[3..0] 14
H_SW[3..0] 21
H_KEY[3..0] 21
U25E
BANK 5
BANK 5A
BANK 5B
HSMC_VCCIO
3.3V
FAN_CTRL 8 AG27
DIFFIO_TX_R1P/RZQ_1
VGA_CLK 18 W20
VGA_G0 Y21
VGA_G1 AA25
VGA_G2 AB26
VGA_G3 AB22
VGA_G4 AB23
VGA_G5 AA24
VGA_G6 AB25
VGA_G7 AE27
VGA_B0 AE28
VGA_B1 Y23
VGA_B2 Y24
VGA_B3 AG28
VGA_B4 AF28
VGA_B5 V23
VGA_B6 W24
VGA_B7 AF29
AUD_I2C_SDAT 19 AF30
AUD_MUTE AD26
AUD_ADCDAT 19 AC27
AUD_I2C_SCLK 19 AH30
AUD_ADCLRCK 19 AG30
DIFFIO_RX_R4P
DIFFIO_RX_R4N
DIFFIO_TX_R7P
DIFFIO_TX_R7N
DIFFIO_RX_R8P
DIFFIO_RX_R8N
DIFFIO_RX_R9P
DIFFIO_RX_R9N
DIFFIO_TX_R10P
DIFFIO_TX_R10N
DIFFIO_RX_R11P
DIFFIO_RX_R11N
DIFFIO_TX_R12P
DIFFIO_TX_R12N
DIFFIO_RX_R13P
DIFFIO_RX_R13N
DIFFIO_TX_R14P
DIFFIO_TX_R14N
DIFFIO_RX_R15P
DIFFIO_RX_R15N
DIFFIO_TX_R16P
DIFFIO_TX_R16N
DIFFIO_RX_R17P W25 SW0
DIFFIO_RX_R17N V25 SW1
DIFFIO_TX_R18P AC28 SW2
DIFFIO_TX_R18N AC29 SW3
DIFFIO_RX_R19P AB30
DIFFIO_RX_R19N AA30
DIFFIO_TX_R20P AB28
DIFFIO_TX_R20N AA28 12 HSMC_SCL
DIFFIO_TX_R22P AE29 12 HSMC_SDA
DIFFIO_TX_R22N AD29 12 HSMC_CLK_OUT0
DIFFIO_TX_R24P AD30
DIFFIO_TX_R24N/RZQ_2 AC30
5CSXFC6DF31
19 AUD_MUTE
U25F
BANK 6
BANK 6B 1.5V
BANK 6A 1.5V
W26 HPS_DQ_32
R24 HPS_DQ_33
U27 HPS_DQ_34
V28 HPS_DQ_35
T25 HPS_DQ_36
U25 HPS_DQ_37
V27 HPS_DQ_38
Y29 HPS_DQ_39
W27 HPS_DM_4
T24 HPS_DQS_4
T23 HPS_DQSn_4
HPS_DDR3_DQ24 P24 HPS_DQ_24
HPS_DDR3_DQ25 P25 HPS_DQ_25
HPS_DDR3_DQ26 T29 HPS_DQ_26
HPS_DDR3_DQ27 T28 HPS_DQ_27
HPS_DDR3_DQ28 R27 HPS_DQ_28
HPS_DDR3_DQ29 R26 HPS_DQ_29
HPS_DDR3_DQ30 V30 HPS_DQ_30
HPS_DDR3_DQ31 W29 HPS_DQ_31
HPS_DDR3_DM3 W30 HPS_DM_3
HPS_DDR3_DQS_P3 R22 HPS_DQS_3
HPS_DDR3_DQS_N3 R21 HPS_DQSn_3
HPS_DDR3_RESET_n 14 P30 HPS_RESET_n
HPS_DDR3_A0 F26 HPS_A_0
HPS_DDR3_A1 G30 HPS_A_1
HPS_DDR3_A2 F28 HPS_A_2
HPS_DDR3_A3 F30 HPS_A_3
HPS_DDR3_A4 J25 HPS_A_4
HPS_DDR3_A5 J27 HPS_A_5
HPS_DDR3_A6 F29 HPS_A_6
HPS_DDR3_A7 E28 HPS_A_7
HPS_DDR3_A8 H27 HPS_A_8
HPS_DDR3_A9 G26 HPS_A_9
HPS_DDR3_A10 D29 HPS_A_10
HPS_DDR3_A11 C30 HPS_A_11
HPS_DDR3_A12 B30 HPS_A_12
HPS_DDR3_A13 C29 HPS_A_13
HPS_DDR3_A14 H25 HPS_A_14
G25 HPS_A_15
HPS_DDR3_CK_P 14 M23 HPS_CK
HPS_DDR3_CK_N 14 L23 HPS_CK_n
HPS_DDR3_CAS_n 14 E27 HPS_CAS_n
HPS_DDR3_RAS_n 14 D30 HPS_RAS_n
HPS_DDR3_BA0 E29 HPS_BA_0
HPS_DDR3_BA1 J24 HPS_BA_1
HPS_DDR3_BA2 J23 HPS_BA_2
HPS_DDR3_CS_n 14 H24 HPS_CS_n0
K21 HPS_CS_n1
HPS_DDR3_WE_n 14 C28 HPS_WE_n
R295 100 HPS_DDR3_RZQ0 D27 HPS_RZQ_0
GND
HPS_DDR,HPS_GPI13 Y28
HPS_DDR,HPS_GPI12 V29
HPS_DDR,HPS_GPI11 U20 H_KEY3
HPS_DDR,HPS_GPI10 T21 H_KEY2
HPS_DDR,HPS_GPI9 U28 H_KEY1
HPS_DDR,HPS_GPI8 T30 H_KEY0
HPS_DDR,HPS_GPI7 V20 H_SW0
HPS_DDR,HPS_GPI6 P22 H_SW1
HPS_DDR,HPS_GPI5 P29 H_SW2
HPS_DDR,HPS_GPI4 N30 H_SW3
HPS_DQ_16 U26 HPS_DDR3_DQ16
HPS_DQ_17 T26 HPS_DDR3_DQ17
HPS_DQ_18 N29 HPS_DDR3_DQ18
HPS_DQ_19 N28 HPS_DDR3_DQ19
HPS_DQ_20 P26 HPS_DDR3_DQ20
HPS_DQ_21 P27 HPS_DDR3_DQ21
HPS_DQ_22 N27 HPS_DDR3_DQ22
HPS_DQ_23 R29 HPS_DDR3_DQ23
HPS_DM_2 R28 HPS_DDR3_DM2
HPS_DQS_2 R19 HPS_DDR3_DQS_P2
HPS_DQSn_2 R18 HPS_DDR3_DQS_N2
HPS_DDR,HPS_GPI3 M22
HPS_DDR,HPS_GPI2 N23
HPS_DDR,HPS_GPI1 J26
HPS_DDR,HPS_GPI0 M25
HPS_DQ_8 K26 HPS_DDR3_DQ8
HPS_DQ_9 L26 HPS_DDR3_DQ9
HPS_DQ_10 K29 HPS_DDR3_DQ10
HPS_DQ_11 K27 HPS_DDR3_DQ11
HPS_DQ_12 M26 HPS_DDR3_DQ12
HPS_DQ_13 M27 HPS_DDR3_DQ13
HPS_DQ_14 L28 HPS_DDR3_DQ14
HPS_DQ_15 M30 HPS_DDR3_DQ15
HPS_DM_1 M28 HPS_DDR3_DM1
HPS_DQS_1 N25 HPS_DDR3_DQS_P1
HPS_DQSn_1 N24 HPS_DDR3_DQS_N1
HPS_DQ_0 K23 HPS_DDR3_DQ0
HPS_DQ_1 K22 HPS_DDR3_DQ1
HPS_DQ_2 H30 HPS_DDR3_DQ2
HPS_DQ_3 G28 HPS_DDR3_DQ3
HPS_DQ_4 L25 HPS_DDR3_DQ4
HPS_DQ_5 L24 HPS_DDR3_DQ5
HPS_DQ_6 J30 HPS_DDR3_DQ6
HPS_DQ_7 J29 HPS_DDR3_DQ7
HPS_DM_0 K28 HPS_DDR3_DM0
HPS_DQS_0 N18 HPS_DDR3_DQS_P0
HPS_DQSn_0 M19 HPS_DDR3_DQS_N0
HPS_ODT_0 H28 14 HPS_DDR3_ODT
HPS_ODT_1 H29
HPS_CKE_0 L29 14 HPS_DDR3_CKE
HPS_CKE_1 L30
5CSXFC6DF31
Copyright (c) 2013 by Terasic Technologies Inc. Taiwan.
All rights reserved.
No part of this schematic design may be reproduced, duplicated, or used without the prior written permission of Terasic.
Title
C5S Board
Size B
Document Number
BANK5 & BANK6
Rev A
Date: Tuesday, May 07, 2013
Sheet 4 of 30

HPS_ENET_RX_DATA[3..0] 24
HPS_ENET_TX_DATA[3..0] 24
HPS_FLASH_DATA[3..0] 16
12 HSMC_D[3..0]
HPS_LED[3..0] 21
12 HSMC_CLKOUT_n[2..1]
12 HSMC_CLKOUT_p[2..1]
12 HSMC_TX_p[16..0]
12 HSMC_TX_n[16..0]
8,12 HSMC_RX_p[16..0]
8,12 HSMC_RX_n[16..0]

U25G

BANK 7

BANK 7A

3.3V

TP3 DNI

HPS_WARM_RST_n C27
HPS_RESET_n F23
HPS_NRST
HPS_NPOR
HPS_CLK1
HPS_CLK2
HPS_TRST
HPS_PORSEL
HPS_TDO
HPS_TDI
HPS_TCK
HPS_TMS

6 HPS_CLOCK1_25 D25
6 HPS_CLOCK2_25 F25
VCC3P3 R299 4.7K A28
R298 4.7K F24
HPS_TDO 11 B28
HPS_TDI 11 B27
HPS_TCK 11 H22
HPS_TMS 11 A29

CAN0_TX,UART0_TX,SPIM1_SS0,HPS_GPIO66
CAN0_RX,UART0_RX,SPIM1_MISO,HPS_GPIO65
I2C0_SCL,UART1_TX,SPIM1_MOSI,HPS_GPIO64
I2C0_SDA,UART1_RX,SPIM1_CLK,HPS_GPIO63
UART0_TX,CAN0_TX,SPIM1_SS1,HPS_GPIO62
UART0_RX,CAN0_RX,SPIM0_SS1,HPS_GPIO61
SPIM0_SS0,CAN1_TX,UART1_RTS,BOOTSEL0,HPS_GPIO60
SPIM0_MISO,CAN1_RX,UART1_CTS,HPS_GPIO59
SPIM0_MOSI,I2C1_SCL,UART0_RTS,HPS_GPIO58
SPIM0_CLK,I2C1_SDA,UART0_CTS,HPS_GPIO57
TRACE_D7,SPIS1_MISO,I2C0_SCL,HPS_GPIO56
TRACE_D6,SPIS1_SS0,I2C0_SDA,HPS_GPIO55
TRACE_D5,SPIS1_MOSI,CAN1_TX,HPS_GPIO54
TRACE_D4,SPIS1_CLK,CAN1_RX,HPS_GPIO53
TRACE_D3,SPIS0_SS0,I2C1_SCL,HPS_GPIO52
TRACE_D2,SPIS0_MISO,I2C1_SDA,HPS_GPIO51
TRACE_D1,SPIS0_MOSI,UART0_TX,HPS_GPIO50
TRACE_D0,SPIS0_CLK,UART0_RX,HPS_GPIO49
TRACE_CLK,HPS_GPIO48

D24 17 HPS_LCM_SPIM_SS
E24
D22 17 HPS_LCM_SPIM_MOSI
C23 17 HPS_LCM_SPIM_CLK
G22 17 HPS_LCM_D_C
B22 25 HPS_GSENSOR_INT
H20 25 HPS_SPIM_SS
B23 25 HPS_SPIM_MISO
C22 25 HPS_SPIM_MOSI
A23 25 HPS_SPIM_CLK
E23 HPS_LED3
C24 HPS_LED2
G21 HPS_LED1
A24 HPS_LED0
H23 8,25 HPS_I2C_CLK
A25 8,25 HPS_I2C_SDA
C25 22 HPS_UART_TX
B25 22 HPS_UART_RX
B26 17 HPS_LCM_RST_n

BANK 7B

3.3V

HPS_ENET_GTX_CLK 24 H19
HPS_ENET_TX_DATA0 F20
HPS_ENET_TX_DATA1 J19
HPS_ENET_TX_DATA2 F21
HPS_ENET_TX_DATA3 F19
HPS_ENET_RX_DATA0 A21
HPS_ENET_MDIO 24 E21
HPS_ENET_MDC 24 B21
HPS_ENET_RX_DV 24 K17
HPS_ENET_TX_EN 24 A20
HPS_ENET_RX_CLK 24 G20
HPS_ENET_RX_DATA1 B20
HPS_ENET_RX_DATA2 B18
HPS_ENET_RX_DATA3 D21
HPS_BOOTSEL2 D20

NAND_ALE,RGMII1_TX_CLK,QSPI_SS3,HPS_GPIO14
NAND_CE,RGMII1_TXD0,USB1_D0,HPS_GPIO15
NAND_CLE,RGMII1_TXD1,USB1_D1,HPS_GPIO16
NAND_RE,RGMII1_TXD2,USB1_D2,HPS_GPIO17
NAND_RB,RGMII1_TXD3,USB1_D3,HPS_GPIO18
NAND_DQ0,RGMII1_RXD0,HPS_GPIO19
NAND_DQ1,RGMII1_MDIO,I2C3_SDA,HPS_GPIO20
NAND_DQ2,RGMII1_MDC,I2C3_SCL,HPS_GPIO21
NAND_DQ3,RGMII1_RX_CTL,USB1_D4,HPS_GPIO22
NAND_DQ4,RGMII1_TX_CTL,USB1_D5,HPS_GPIO23
NAND_DQ5,RGMII1_RX_CLK,USB1_D6,HPS_GPIO24
NAND_DQ6,RGMII1_RXD1,USB1_D7,HPS_GPIO25
NAND_DQ7,RGMII1_RXD2,HPS_GPIO26
NAND_WP,RGMII1_RXD3,QSPI_SS2,HPS_GPIO27
NAND_WE,QSPI_SS1,BOOTSEL2,HPS_GPIO28

QSPI_SS1,HPS_GPIO35
QSPI_CLK,HPS_GPIO34
QSPI_SS0,BOOTSEL1,HPS_GPIO33
QSPI_IO3,USB1_NXT,HPS_GPIO32
QSPI_IO2,USB1_DIR,HPS_GPIO31
QSPI_IO1,USB1_STP,HPS_GPIO30
QSPI_IO0,USB1_CLK,HPS_GPIO29

C19 24 HPS_ENET_INT_n
D19 16 HPS_FLASH_DCLK
A18 16 HPS_FLASH_NCSO
E19 HPS_FLASH_DATA3
A19 HPS_FLASH_DATA2
H18 HPS_FLASH_DATA1
C20 HPS_FLASH_DATA0

BANK 7C

3.3V

HPS_SD_CMD 22 F18
HPS_SD_DATA0 22 B17
HPS_SD_DATA1 22 G18
17 HPS_LCM_BK C17
TP5 DNI H17
C18

SDMMC_CMD,USB0_D0,HPS_GPIO36
SDMMC_PWREN,USB0_D1,HPS_GPIO37
SDMMC_D0,USB0_D2,HPS_GPIO38
SDMMC_D1,USB0_D3,HPS_GPIO39
SDMMC_D4,USB0_D4,HPS_GPIO40
SDMMC_D5,USB0_D5,HPS_GPIO41

SDMMC_D3,USB0_NXT,HPS_GPIO47
SDMMC_D2,USB0_DIR,HPS_GPIO46
SDMMC_CLK,USB0_STP,HPS_GPIO45
SDMMC_CLK_IN,USB0_CLK,HPS_GPIO44
SDMMC_D7,USB0_D7,HPS_GPIO43
SDMMC_D6,USB0_D6,HPS_GPIO42

B16 22 HPS_SD_DATA3
D17 22 HPS_SD_DATA2
A16 22 HPS_SD_CLK
E17
E18 R332 DNI 0 5,24 HPS_ENET_RESET_n
G17 R340 DNI 0 23 USB_RESET_PHY

BANK 7D

3.3V

HPS_USB_DATA0 23 E16
HPS_USB_DATA1 23 G16
HPS_USB_DATA2 23 D16
HPS_USB_DATA3 23 D14
HPS_USB_DATA4 23 A15
HPS_USB_STP 23 C15
HPS_USB_DIR 23 E14
HPS_USB_NXT 23 A14

RGMII0_TXD0,USB1_D0,HPS_GPIO1
RGMII0_TXD1,USB1_D1,HPS_GPIO2
RGMII0_TXD2,USB1_D2,HPS_GPIO3
RGMII0_TXD3,USB1_D3,HPS_GPIO4
RGMII0_RXD0,USB1_D4,HPS_GPIO5
RGMII0_RXD1,USB1_STP,HPS_GPIO11
RGMII0_RXD2,USB1_DIR,HPS_GPIO12
RGMII0_RXD3,USB1_NXT,HPS_GPIO13

RGMII0_TX_CLK,HPS_GPIO0
RGMII0_RX_CLK,USB1_CLK,HPS_GPIO10
RGMII0_RX_CTL,USB1_D7,HPS_GPIO8
RGMII0_TX_CTL,HPS_GPIO9
RGMII0_MDC ,USB1_D6,I2C2_SCL,HPS_GPIO7
RGMII0_MDIO,USB1_D5,I2C2_SDA,HPS_GPIO6

F16 25 HPS_LTC_GPIO
N16 23 HPS_USB_CLKOUT
M17 23 HPS_USB_DATA7
B15 22 HPS_CONV_USB_n
D15 23 HPS_USB_DATA6
C14 23 HPS_USB_DATA5

5CSXFC6DF31

HPS_USB_DATA[7..0] 23

VCC3P3 R337 10K J17 BOOTSEL0
HPS_SPIM_SS R139 1K BOOTSEL0
GND

VCC3P3 R336 10K J18 BOOTSEL2
HPS_BOOTSEL2 R140 1K BOOTSEL2
GND

VCC3P3 R335 10K J19 BOOTSEL1
HPS_FLASH_NCSO R187 1K BOOTSEL1
GND

VCC3P3 R334 10K J15 CLKSEL0
HPS_LCM_SPIM_SS R133 1K CLKSEL0
GND

VCC3P3 R333 10K J16 CLKSEL1
HPS_LCM_D_C R345 1K CLKSEL1
GND

U25H

BANK 8A

HSMC_TX_p16 B13
HSMC_TX_n16 A13
HSMC_RX_p13 C13
HSMC_RX_n13 B12
HSMC_CLKOUT_p2 A11
HSMC_CLKOUT_n2 A10
HSMC_RX_p16 F15
HSMC_RX_n16 F14
HSMC_TX_p15 C12
HSMC_TX_n15 B11
HSMC_RX_p12 D11
HSMC_RX_n12 D10
HSMC_TX_p0 A9
HSMC_TX_n0 A8
HSMC_TX_p13 C7
HSMC_TX_n13 B7
HSMC_RX_p10 E9
HSMC_RX_n10 D9
HSMC_TX_p14 C8
HSMC_TX_n14 B8
HSMC_RX_p15 H14
HSMC_RX_n15 G13
HSMC_D0 C10
HSMC_D2 C9
HSMC_RX_p14 F13
HSMC_RX_n14 E13
HSMC_TX_p12 A6
HSMC_TX_n12 A5
HSMC_RX_p6 H8
HSMC_RX_n6 G8
HSMC_TX_p11 A4
HSMC_TX_n11 A3
HSMC_RX_p11 E12
HSMC_RX_n11 D12
HSMC_TX_p3 D6
HSMC_TX_n3 C5
HSMC_D1 H13
HSMC_D3 H12

DIFFIO_TX_T2P
DIFFIO_TX_T2N
DIFFIO_RX_T3P
DIFFIO_RX_T3N
DIFFIO_TX_T4P
DIFFIO_TX_T4N
DIFFIO_RX_T5P
DIFFIO_RX_T5N
DIFFIO_TX_T6P
DIFFIO_TX_T6N
DIFFIO_RX_T7P
DIFFIO_RX_T7N
DIFFIO_TX_T8P
DIFFIO_TX_T8N
DIFFIO_TX_T10P
DIFFIO_TX_T10N
DIFFIO_RX_T11P
DIFFIO_RX_T11N
DIFFIO_TX_T12P
DIFFIO_TX_T12N
DIFFIO_RX_T13P
DIFFIO_RX_T13N
DIFFIO_TX_T14P
DIFFIO_TX_T14N
DIFFIO_RX_T15P
DIFFIO_RX_T15N
DIFFIO_TX_T16P
DIFFIO_TX_T16N
DIFFIO_RX_T17P
DIFFIO_RX_T17N
DIFFIO_TX_T18P
DIFFIO_TX_T18N
DIFFIO_RX_T19P
DIFFIO_RX_T19N
DIFFIO_TX_T20P
DIFFIO_TX_T20N
DIFFIO_RX_T21P
DIFFIO_RX_T21N

DIFFIO_TX_T22P
DIFFIO_TX_T22N
DIFFIO_RX_T23P
DIFFIO_RX_T23N
DIFFIO_TX_T24P
DIFFIO_TX_T24N
DIFFIO_RX_T25P
DIFFIO_RX_T25N
DIFFIO_TX_T26P
DIFFIO_TX_T26N
DIFFIO_RX_T27P
DIFFIO_RX_T27N
DIFFIO_TX_T28P
DIFFIO_TX_T28N
DIFFIO_TX_T29P
DIFFIO_RX_T29N
DIFFIO_TX_T30P
DIFFIO_TX_T30N
DIFFIO_RX_T31P
DIFFIO_RX_T31N
DIFFIO_TX_T32P
DIFFIO_TX_T32N
DIFFIO_RX_T33P
DIFFIO_RX_T33N
DIFFIO_TX_T34P
DIFFIO_TX_T34N
DIFFIO_RX_T35P
DIFFIO_RX_T35N
DIFFIO_TX_T36P
DIFFIO_TX_T36N
DIFFIO_RX_T37P
DIFFIO_RX_T37N
DIFFIO_TX_T38P
DIFFIO_TX_T38N
DIFFIO_RX_T39P
DIFFIO_RX_T39N
DIFFIO_TX_T40P
DIFFIO_TX_T40N

D5 HSMC_TX_p4
C4 HSMC_TX_n4
F11 HSMC_RX_p8
E11 HSMC_RX_n8
E8 HSMC_TX_p1
D7 HSMC_TX_n1
J7 HSMC_RX_p5
H7 HSMC_RX_n5
B2 HSMC_TX_p10
B1 HSMC_TX_n10
B6 HSMC_RX_p9
B5 HSMC_RX_n9
C3 HSMC_TX_p7
B3 HSMC_TX_n7
K12 HSMC_RX_p1
J12 HSMC_RX_n1
D2 HSMC_TX_p9
C2 HSMC_TX_n9
G12 HSMC_RX_p0
G11 HSMC_RX_n0
E4 HSMC_TX_p6
D4 HSMC_TX_n6
K7 HSMC_RX_p4
K8 HSMC_RX_n4
E3 HSMC_TX_p5
E2 HSMC_TX_n5
G10 HSMC_RX_p2
F10 HSMC_RX_n2
E1 HSMC_TX_p8
D1 HSMC_TX_n8
J10 HSMC_RX_p3
J9 HSMC_RX_n3
E7 HSMC_CLKOUT_p1
E6 HSMC_CLKOUT_n1
F9 HSMC_RX_p7
F8 HSMC_RX_n7
G7 HSMC_TX_p2
F6 HSMC_TX_n2

5CSXFC6DF31

VCC3P3 VCC3P3
R330 DNI
100K
C445 0.1u
U29
VCC GND
MR_n RST_n
ADM811
R302 100K
GND
KEY5
HPS_RESET_n
R136
0
R142 0 HPS_RESET_n
R137 0 5,24 HPS_ENET_RESET_n
R301 0 22 HPS_RESET_UART_n
USB3300_MR_n 23 R341 0

VCC3P3 VCC3P3
R331 DNI
100K
C444 0.1u
U30
VCC GND
MR_n RST_n
ADM811
R300 100K
GND
KEY6
WARM_RST
R138
0
HPS_WARM_RST_n
10,11 HPS_WARM_RST_n

Copyright (c) 2013 by Terasic Technologies Inc. Taiwan.
All rights reserved.
No part of this schematic design may be reproduced, duplicated, or used without the prior written permission of Terasic.

Title: C5S Board
Size: Custom | Document Number: BANK7 & BANK8 | Rev: A
Date: Tuesday, May 07, 2013 | Sheet 5 of 30

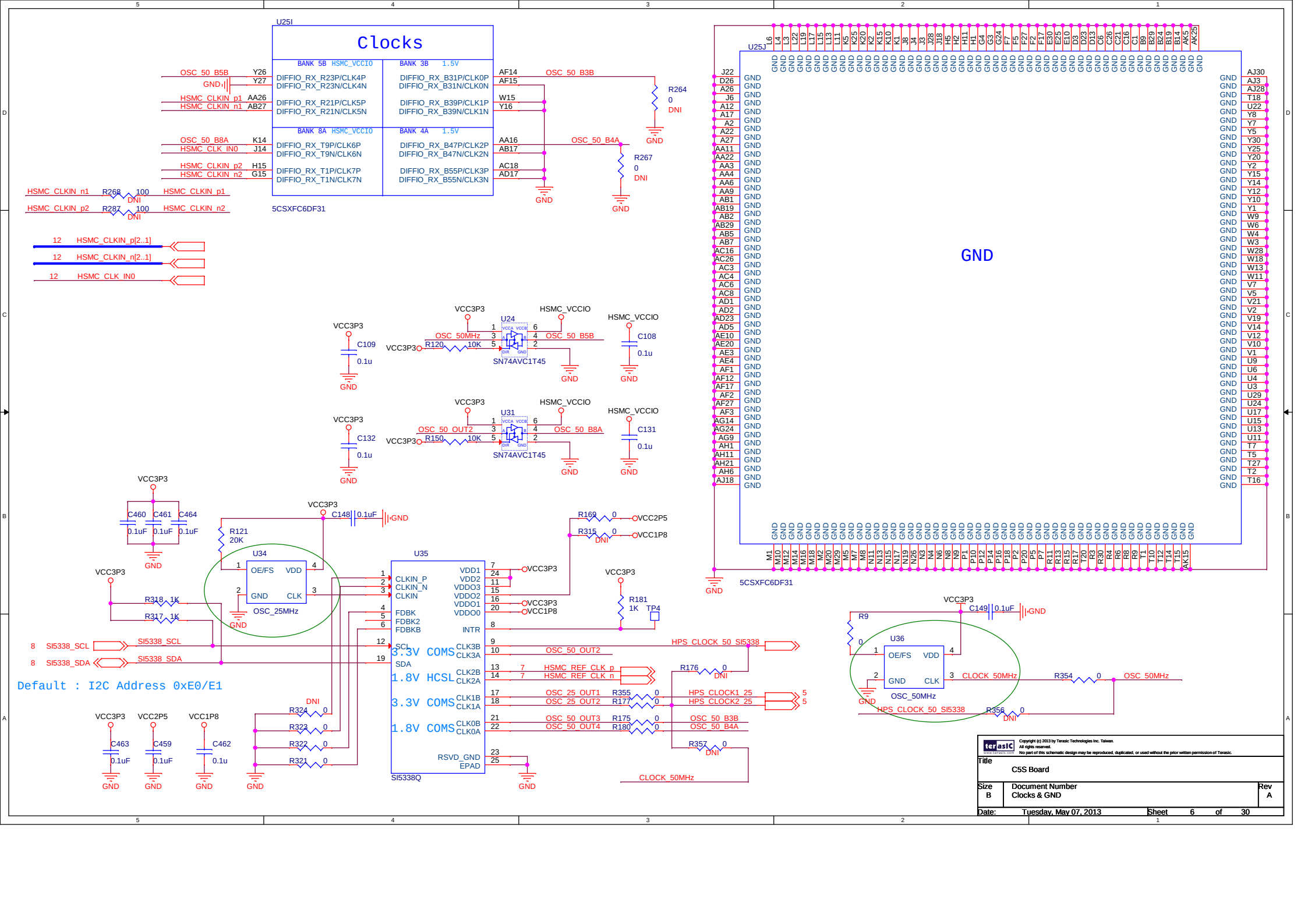

Title	C5S Board
Size B	Document Number Clocks & GND
Rev	A
Date:	Tuesday, May 07, 2013
Sheet	6 of 30

Copyright (c) 2013 by Terasic Technologies Inc. Taiwan.
All rights reserved.
No part of this schematic design may be reproduced, duplicated, or used without the prior written permission of Terasic.

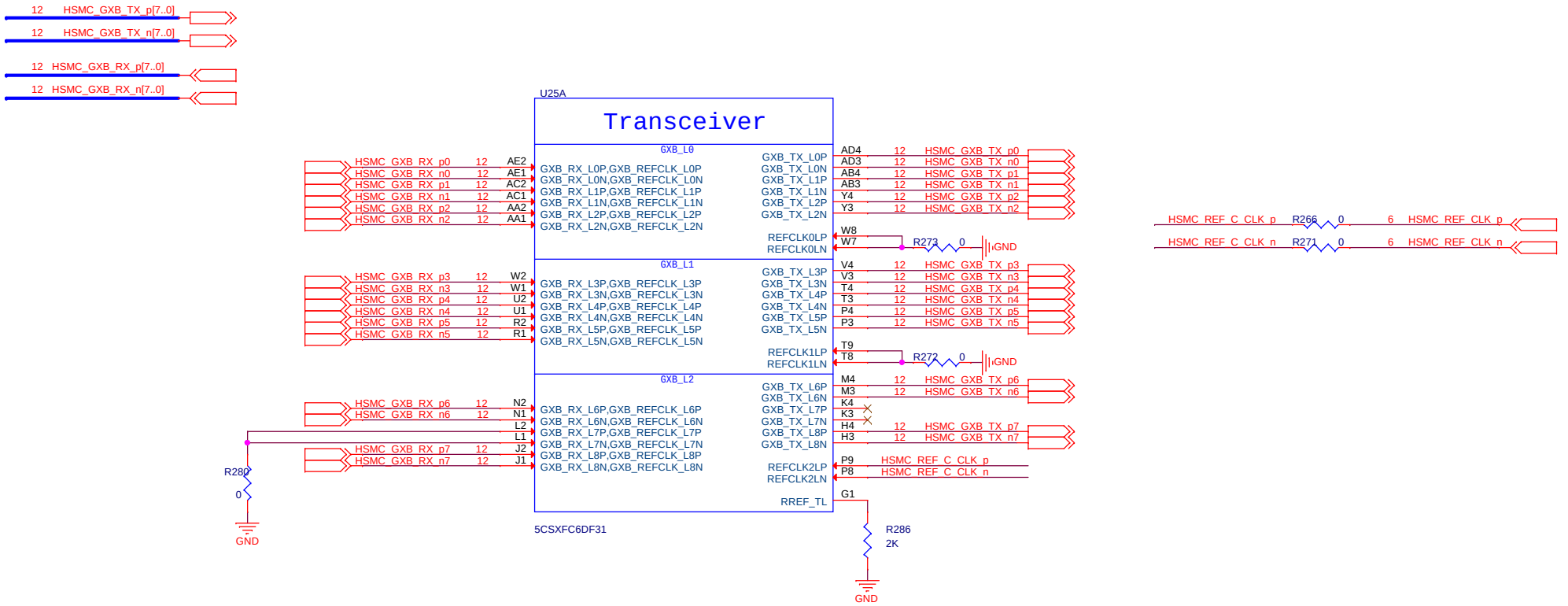

Copyright (c) 2013 by Terasic Technologies Inc. Taiwan.
All rights reserved.
No part of this schematic design may be reproduced, duplicated, or used without the prior written permission of Terasic.

Title	C5S Board	
Size B	Document Number Transceiver	Rev A
Date: Tuesday, May 07, 2013	Sheet 7 of 30	

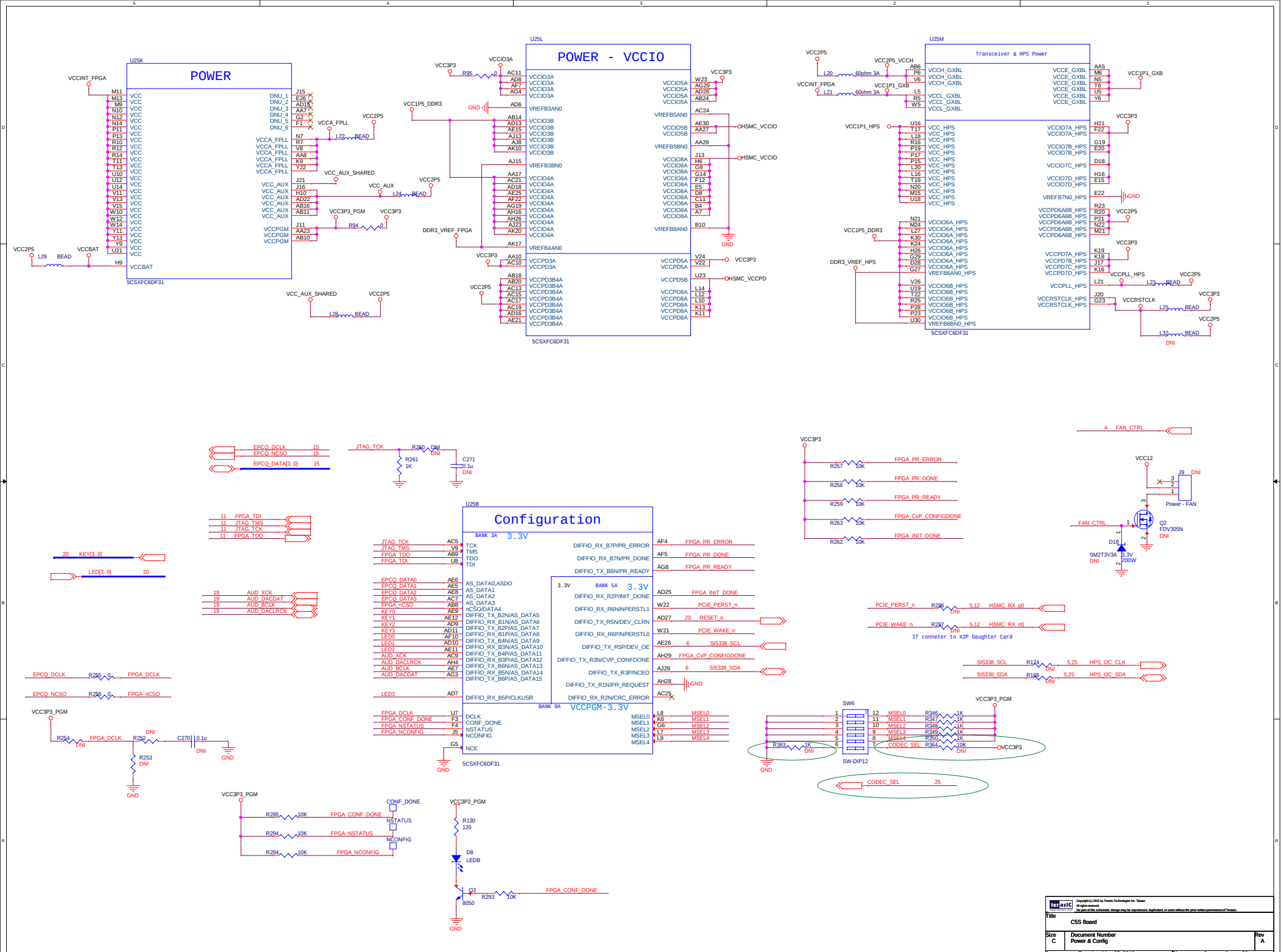

Copyright (c) 2013 by Terasic Technologies Inc. Taiwan.
All rights reserved.
No part of this schematic design may be reproduced, duplicated, or used without the prior written permission of Terasic.

Title	C5S Board	
Size C	Document Number Power & Config	Rev A
Date: Tuesday, May 07, 2013	Sheet 8 of 30	

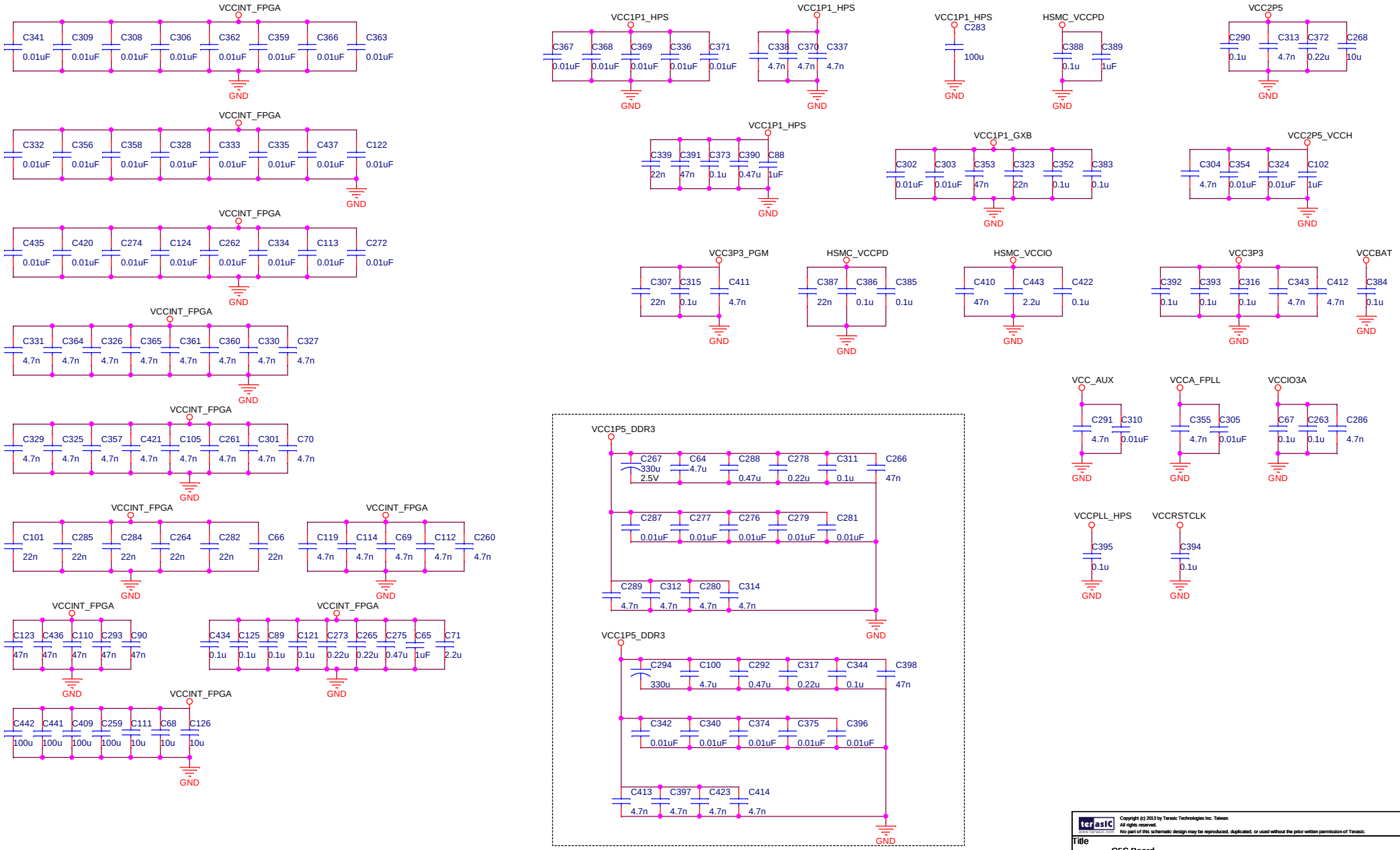

Copyright (c) 2013 by Terasic Technologies Inc. Taiwan.
All rights reserved.
No part of this schematic design may be reproduced, duplicated, or used without the prior written permission of Terasic.

Title	C5S Board	
Size B	Document Number Decoupling	Rev A
Date: Tuesday, May 07, 2013	Sheet 9 of 30	

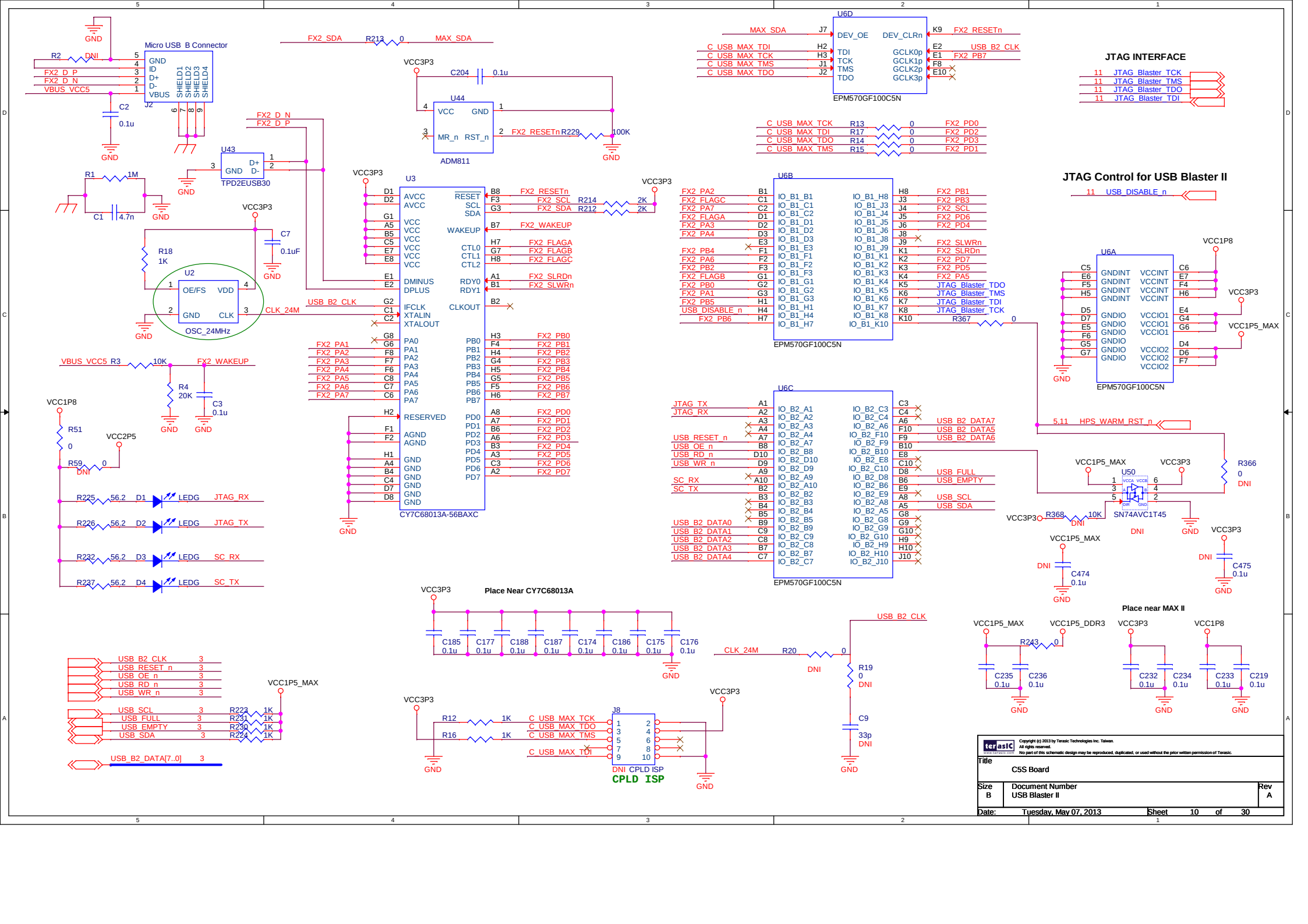
JTAG INTERFACE
JTAG Control for USB Blaster II
Micro USB B Connector
TPD2EUSB30
ADM811
EPM570GF100C5N
CY7C68013A-56BAXC
OSC_24MHz
SN74AVC1T45
Place Near CY7C68013A
Place near MAX II
CPLD ISP
C5S Board
USB Blaster II
Tuesday, May 07, 2013

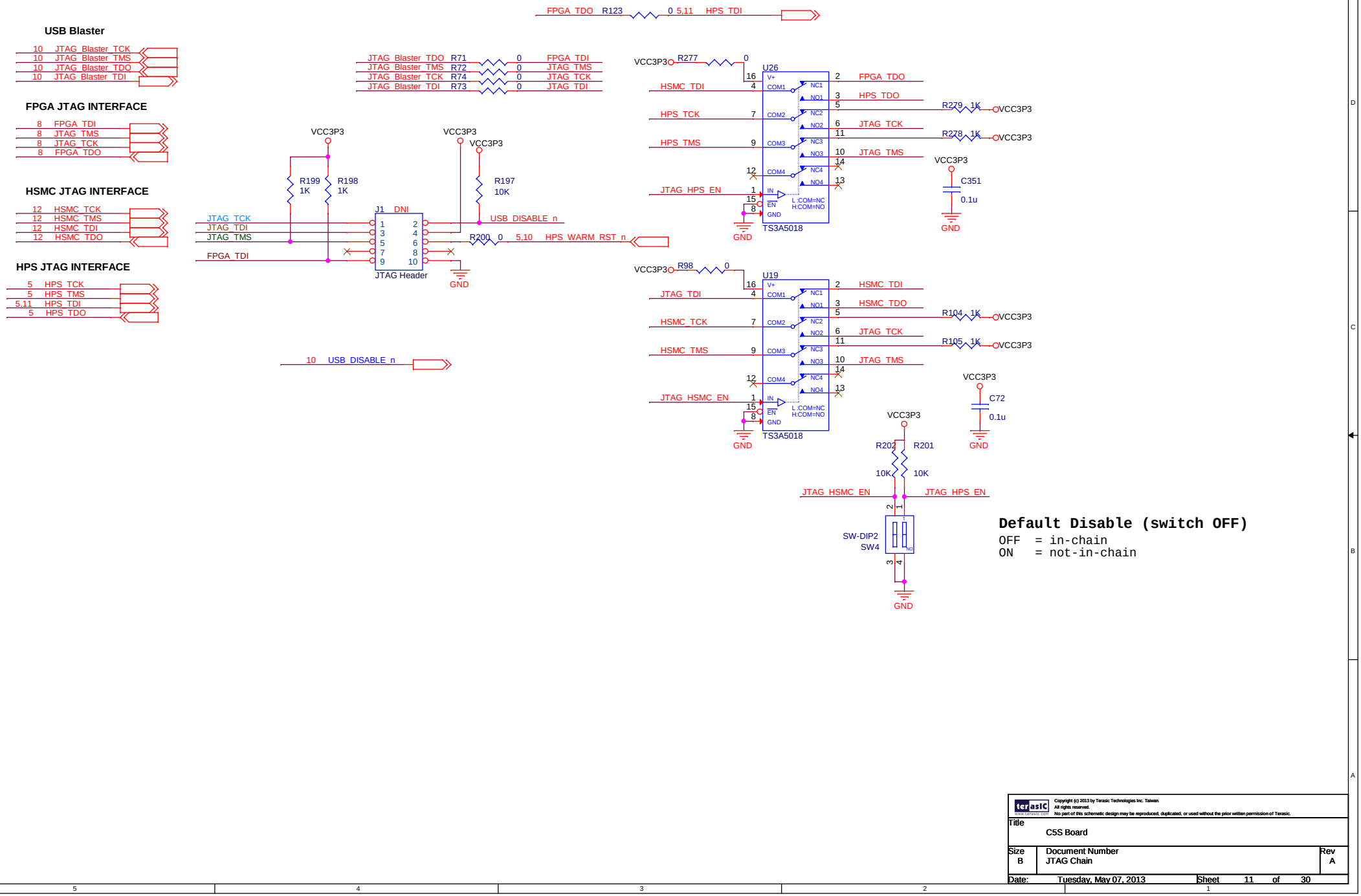

Copyright (c) 2013 by Terasic Technologies Inc. Taiwan.
All rights reserved.
No part of this schematic design may be reproduced, duplicated, or used without the prior written permission of Terasic.

Title	C5S Board	
Size B	Document Number JTAG Chain	Rev A
Date: Tuesday, May 07, 2013	Sheet 11 of 30	

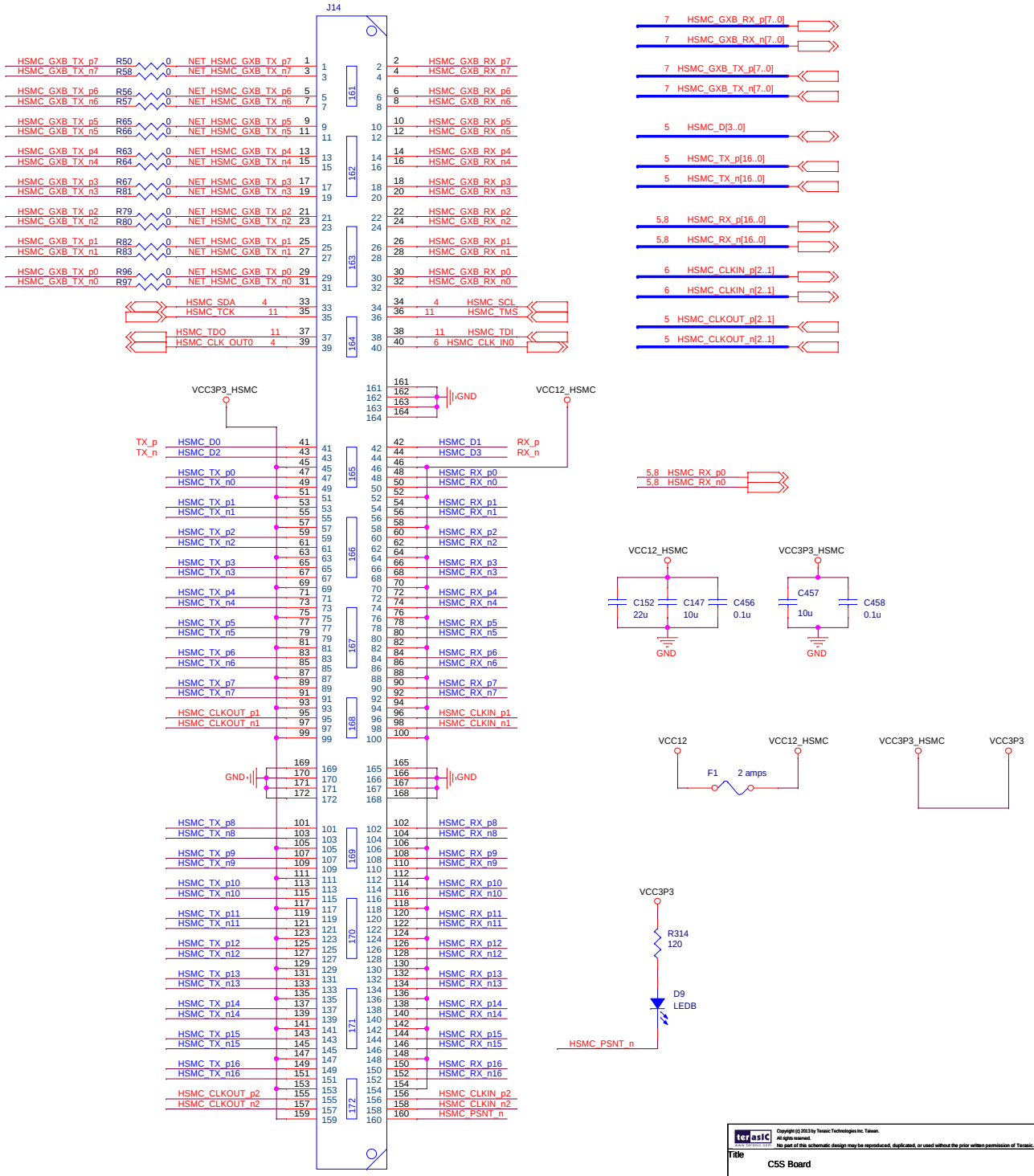

Copyright (c) 2013 by Terasic Technologies Inc. Taiwan.
All rights reserved.
No part of this schematic design may be reproduced, duplicated, or used without the prior written permission of Terasic.

Title	C5S Board	
Size: Custom	Document Number: HSMC	Rev: A
Date: Tuesday, May 07, 2013	Sheet 12 of 30	

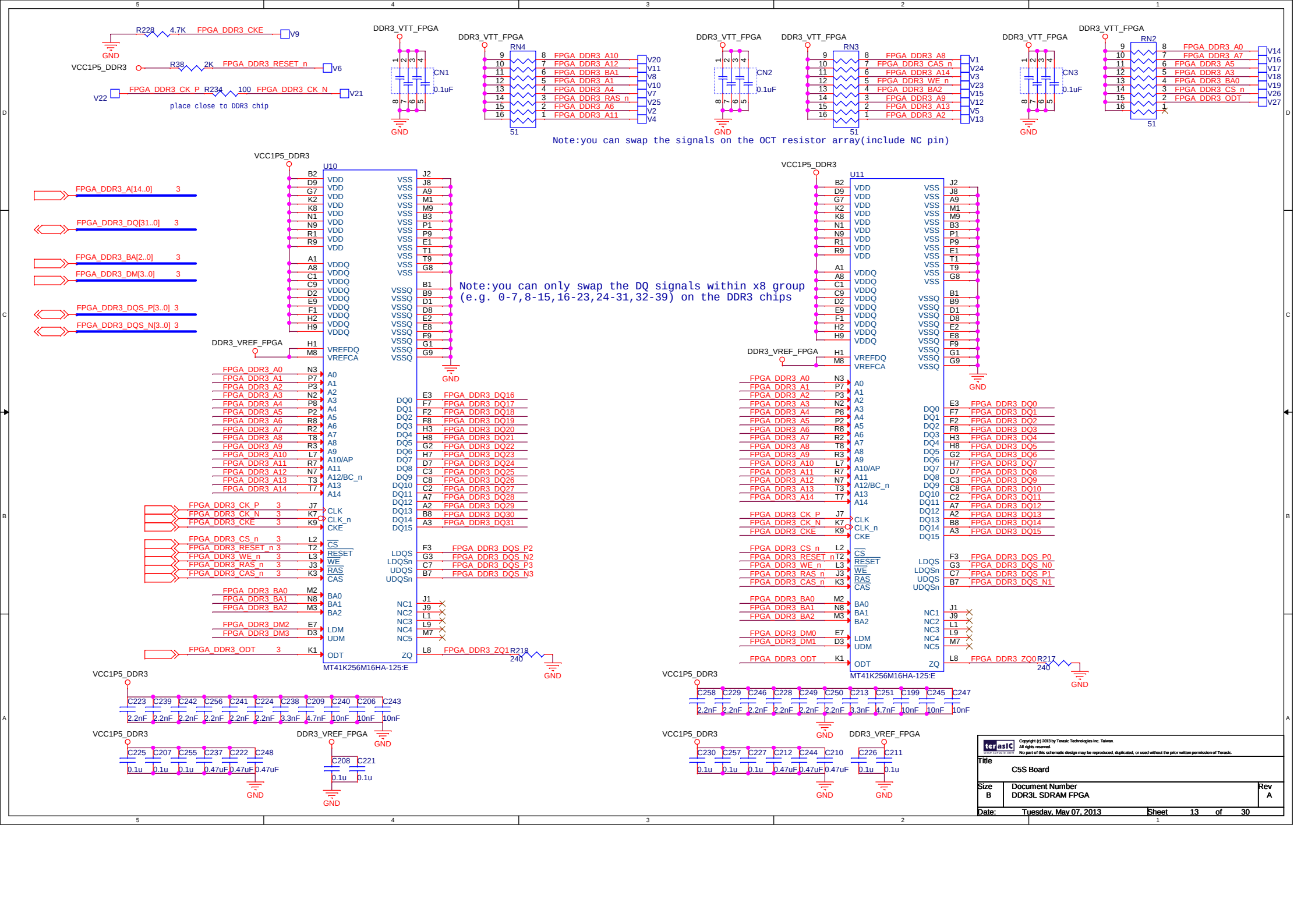
R228 4.7K FPGA_DDR3_CKE V9
GND
VCC1P5_DDR3
R38 2K FPGA_DDR3_RESET_n V6
V22
FPGA_DDR3_CK_P R234 100 FPGA_DDR3_CK_N V21
place close to DDR3 chip
DDR3_VTT_FPGA
CN1 0.1uF
GND
RN4
FPGA_DDR3_A10 V20
FPGA_DDR3_A12 V11
FPGA_DDR3_BA1 V8
FPGA_DDR3_A1 V10
FPGA_DDR3_A4 V7
FPGA_DDR3_RAS_n V25
FPGA_DDR3_A6 V2
FPGA_DDR3_A11 V4
51
CN2 0.1uF
RN3
FPGA_DDR3_A8 V1
FPGA_DDR3_CAS_n V24
FPGA_DDR3_A14 V3
FPGA_DDR3_WE_n V23
FPGA_DDR3_BA2 V15
FPGA_DDR3_A9 V12
FPGA_DDR3_A13 V5
FPGA_DDR3_A2 V13
CN3 0.1uF
RN2
FPGA_DDR3_A0 V14
FPGA_DDR3_A7 V16
FPGA_DDR3_A5 V17
FPGA_DDR3_A3 V18
FPGA_DDR3_BA0 V19
FPGA_DDR3_CS_n V26
FPGA_DDR3_ODT V27
Note:you can swap the signals on the OCT resistor array(include NC pin)
FPGA_DDR3_A[14..0] 3
FPGA_DDR3_DQ[31..0] 3
FPGA_DDR3_BA[2..0] 3
FPGA_DDR3_DM[3..0] 3
FPGA_DDR3_DQS_P[3..0] 3
FPGA_DDR3_DQS_N[3..0] 3
U10
MT41K256M16HA-125:E
DDR3_VREF_FPGA
FPGA_DDR3_CK_P 3
FPGA_DDR3_CK_N 3
FPGA_DDR3_CKE 3
FPGA_DDR3_CS_n 3
FPGA_DDR3_RESET_n 3
FPGA_DDR3_WE_n 3
FPGA_DDR3_RAS_n 3
FPGA_DDR3_CAS_n 3
FPGA_DDR3_BA0
FPGA_DDR3_BA1
FPGA_DDR3_BA2
FPGA_DDR3_DM2
FPGA_DDR3_DM3
FPGA_DDR3_ODT 3
FPGA_DDR3_ZQ1 R218 240
Note:you can only swap the DQ signals within x8 group
(e.g. 0-7,8-15,16-23,24-31,32-39) on the DDR3 chips
U11
MT41K256M16HA-125:E
FPGA_DDR3_ZQ0 R217 240
C223 C239 C242 C256 C241 C224 C238 C209 C240 C206 C243
2.2nF 2.2nF 2.2nF 2.2nF 2.2nF 2.2nF 3.3nF 4.7nF 10nF 10nF 10nF
C225 C207 C255 C237 C222 C248
0.1u 0.1u 0.1u 0.47uF 0.47uF 0.47uF
C208 C221
0.1u 0.1u
C258 C229 C246 C228 C249 C250 C213 C251 C199 C245 C247
2.2nF 2.2nF 2.2nF 2.2nF 2.2nF 2.2nF 3.3nF 4.7nF 10nF 10nF 10nF
C230 C257 C227 C212 C244 C210
0.1u 0.1u 0.1u 0.47uF 0.47uF 0.47uF
C226 C211
0.1u 0.1u
Copyright (c) 2013 by Terasic Technologies Inc. Taiwan.
All rights reserved.
No part of this schematic design may be reproduced, duplicated, or used without the prior written permission of Terasic.
Title
C5S Board
Size B
Document Number
DDR3L SDRAM FPGA
Rev A
Date: Tuesday, May 07, 2013
Sheet 13 of 30

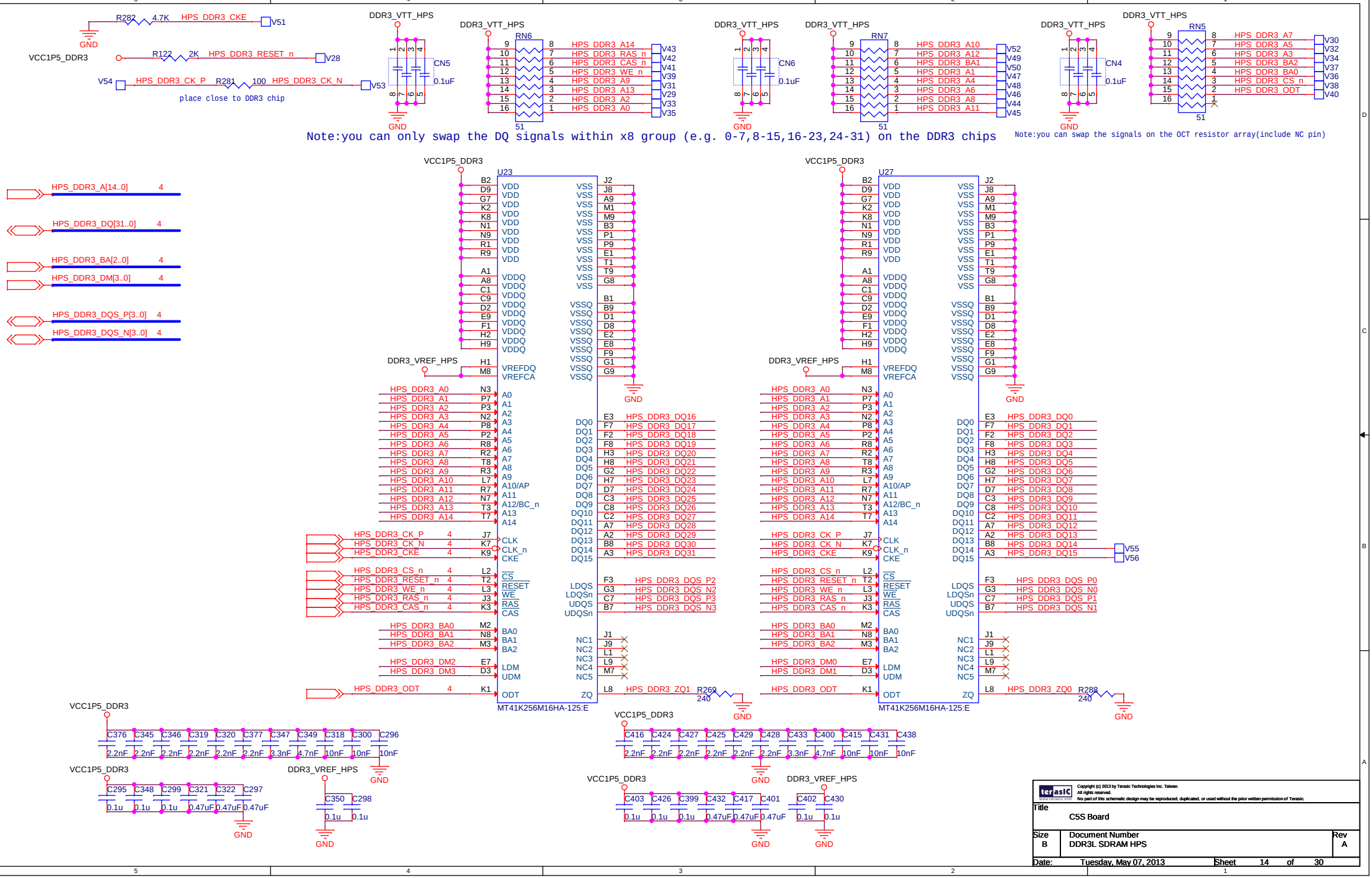

Copyright (c) 2013 by Terasic Technologies Inc. Taiwan.
All rights reserved.
No part of this schematic design may be reproduced, duplicated, or used without the prior written permission of Terasic.

Title	C5S Board	
Size B	Document Number DDR3L SDRAM HPS	Rev A
Date: Tuesday, May 07, 2013	Sheet 14 of 30	

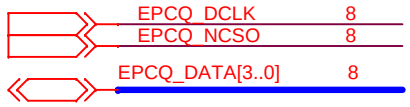

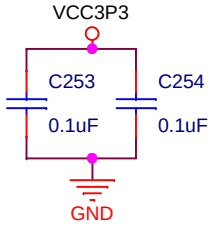

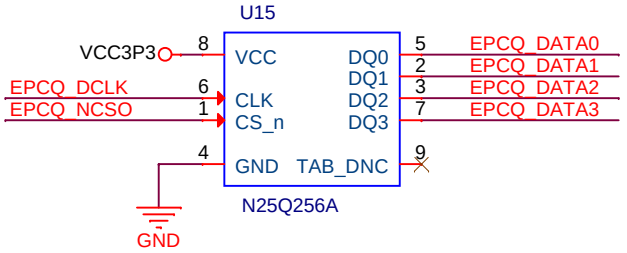

Copyright (c) 2013 by Terasic Technologies Inc. Taiwan.
All rights reserved.
No part of this schematic design may be reproduced, duplicated, or used without the prior written permission of Terasic.

Title	C5S Board	
Size A	Document Number EPCQ	Rev A
Date: Tuesday, May 07, 2013	Sheet 15 of 30	

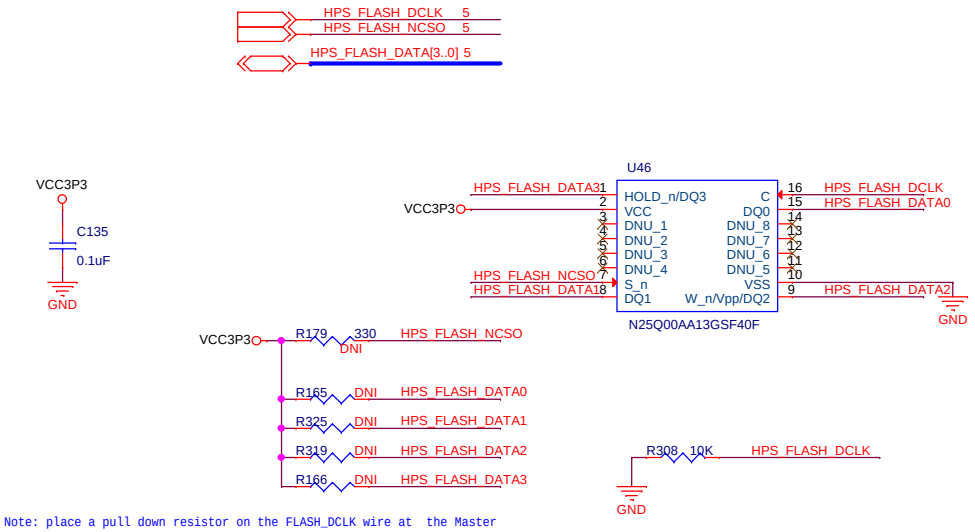

Note: place a pull down resistor on the FLASH_DCLK wire at the Master

Copyright (c) 2013 by Terasic Technologies Inc. Taiwan.
All rights reserved.
No part of this schematic design may be reproduced, duplicated, or used without the prior written permission of Terasic.

Title	C5S Board	
Size B	Document Number QSPI FLASH HPS	Rev A
Date: Tuesday, May 07, 2013	Sheet 16 of 30	

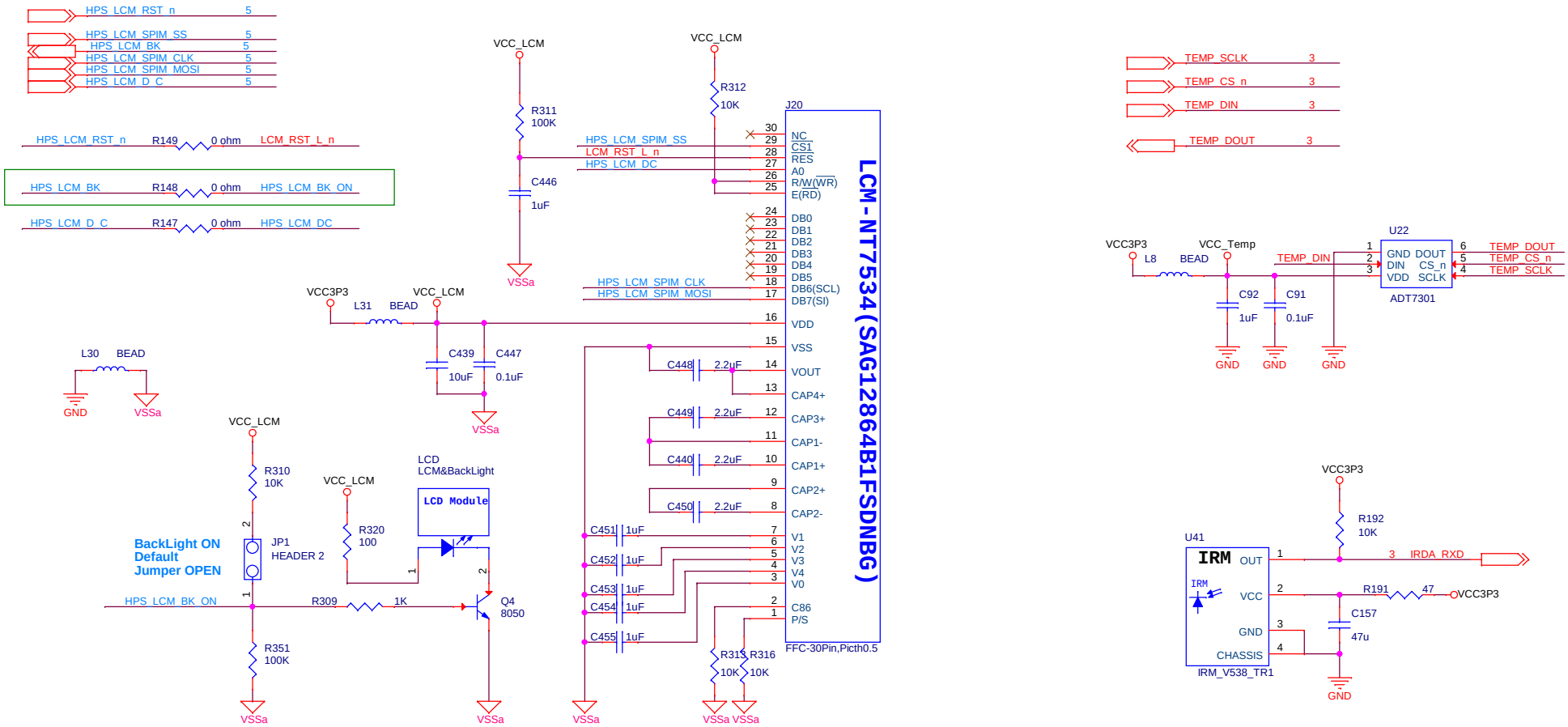

Copyright (c) 2013 by Terasic Technologies Inc. Taiwan.
All rights reserved.
No part of this schematic design may be reproduced, duplicated, or used without the prior written permission of Terasic.

Title	C5S Board	
Size B	Document Number LCD & Temp sensor & IRM	Rev A
Date: Tuesday, May 07, 2013	Sheet 17 of 30	

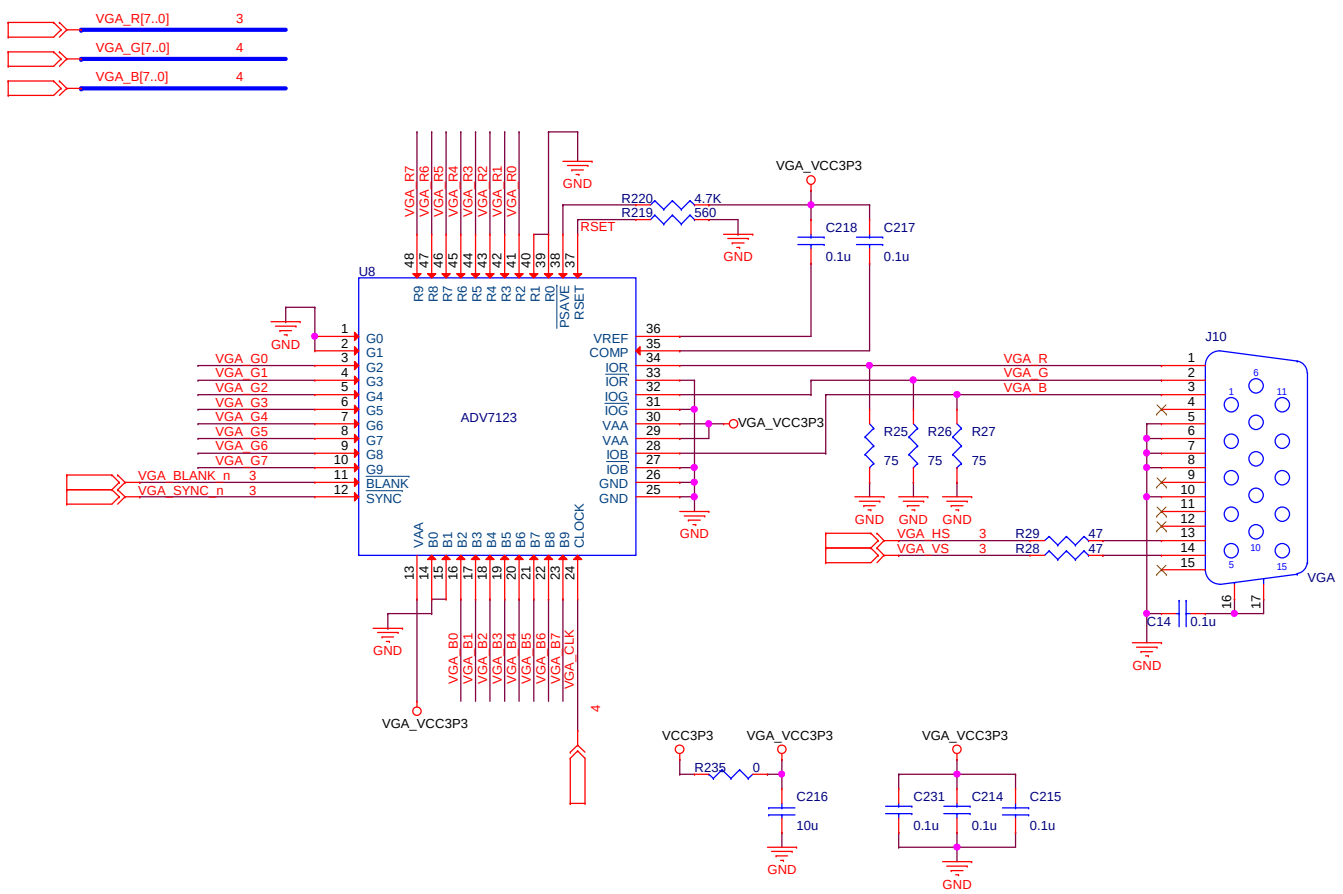

Copyright (c) 2013 by Terasic Technologies Inc. Taiwan.
All rights reserved.
No part of this schematic design may be reproduced, duplicated, or used without the prior written permission of Terasic.

Title	C5S Board	
Size B	Document Number VGA ADV7123	Rev A
Date: Tuesday, May 07, 2013	Sheet 18 of 30	

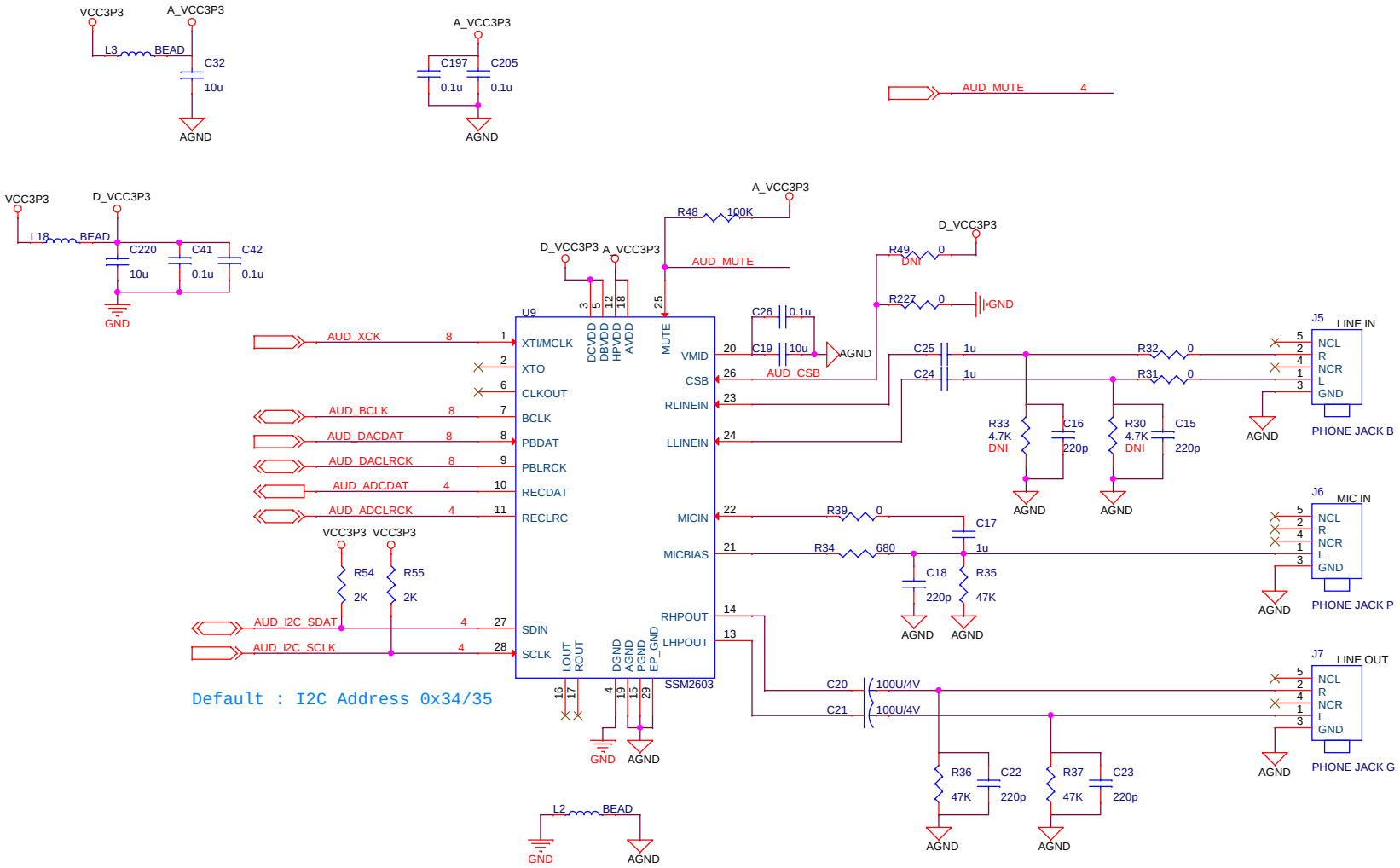

Copyright (c) 2013 by Terasic Technologies Inc. Taiwan.
All rights reserved.
No part of this schematic design may be reproduced, duplicated, or used without the prior written permission of Terasic.

Title	C5S Board	
Size B	Document Number Audio DAC	Rev A
Date: Tuesday, May 07, 2013	Sheet 19 of 30	

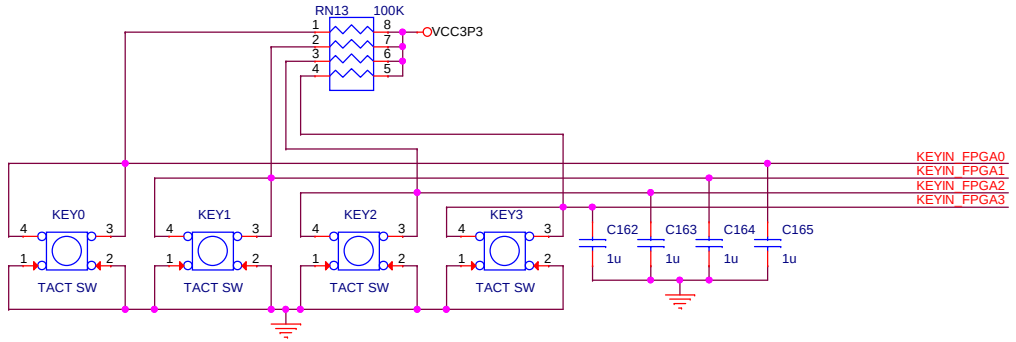

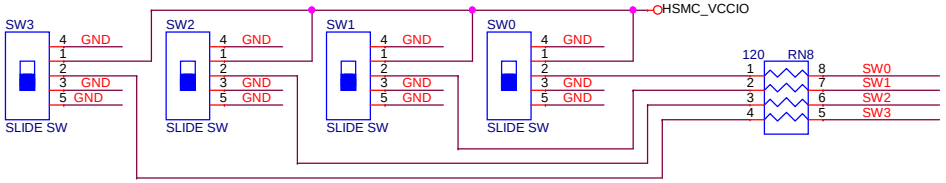

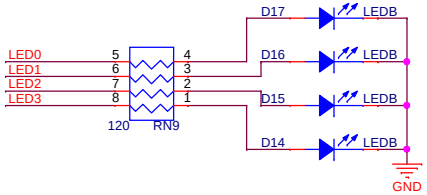

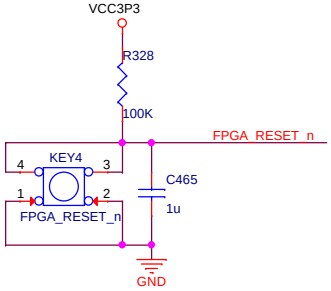

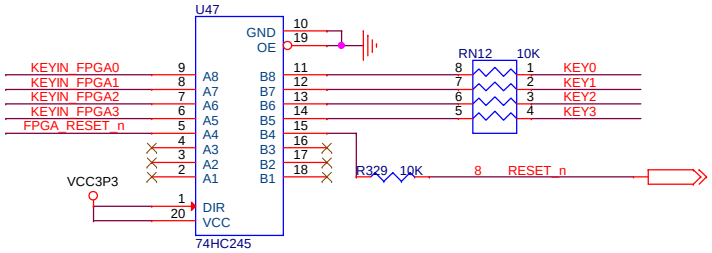

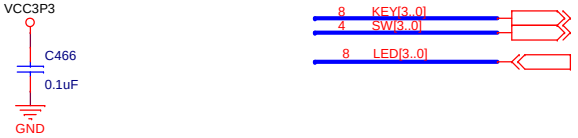

Copyright (c) 2013 by Terasic Technologies Inc. Taiwan.
All rights reserved.
No part of this schematic design may be reproduced, duplicated, or used without the prior written permission of Terasic.

Title	C5S Board	
Size B	Document Number FPGA BUTTON & SW	Rev A
Date: Tuesday, May 07, 2013	Sheet 20 of 30	

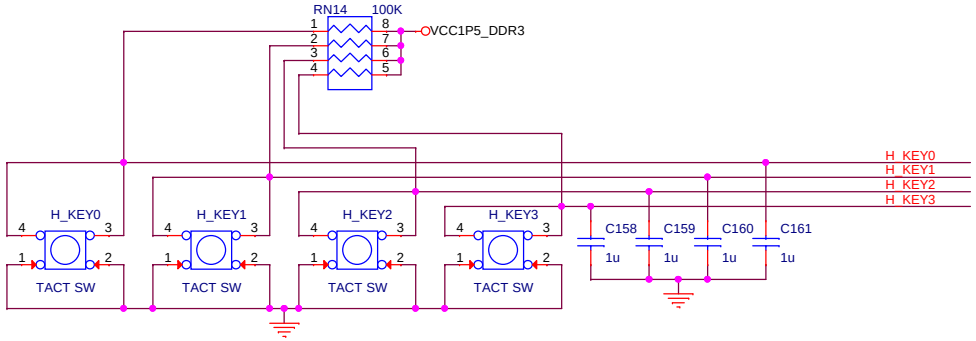

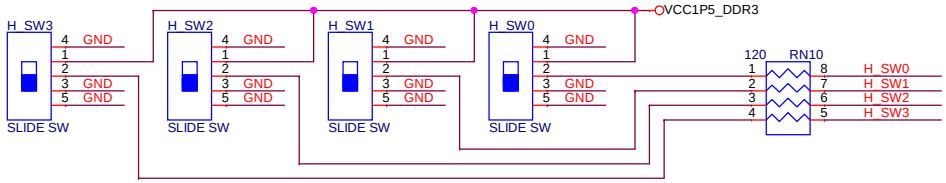

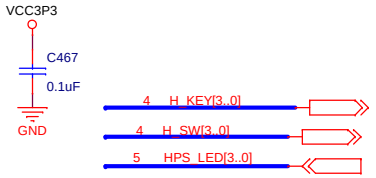

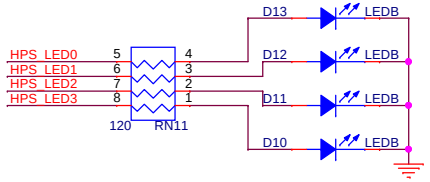

Copyright (c) 2013 by Terasic Technologies Inc. Taiwan.
All rights reserved.
No part of this schematic design may be reproduced, duplicated, or used without the prior written permission of Terasic.

Title	C5S Board	
Size B	Document Number HPS BUTTON & SW	Rev A
Date: Tuesday, May 07, 2013	Sheet 21 of 30	

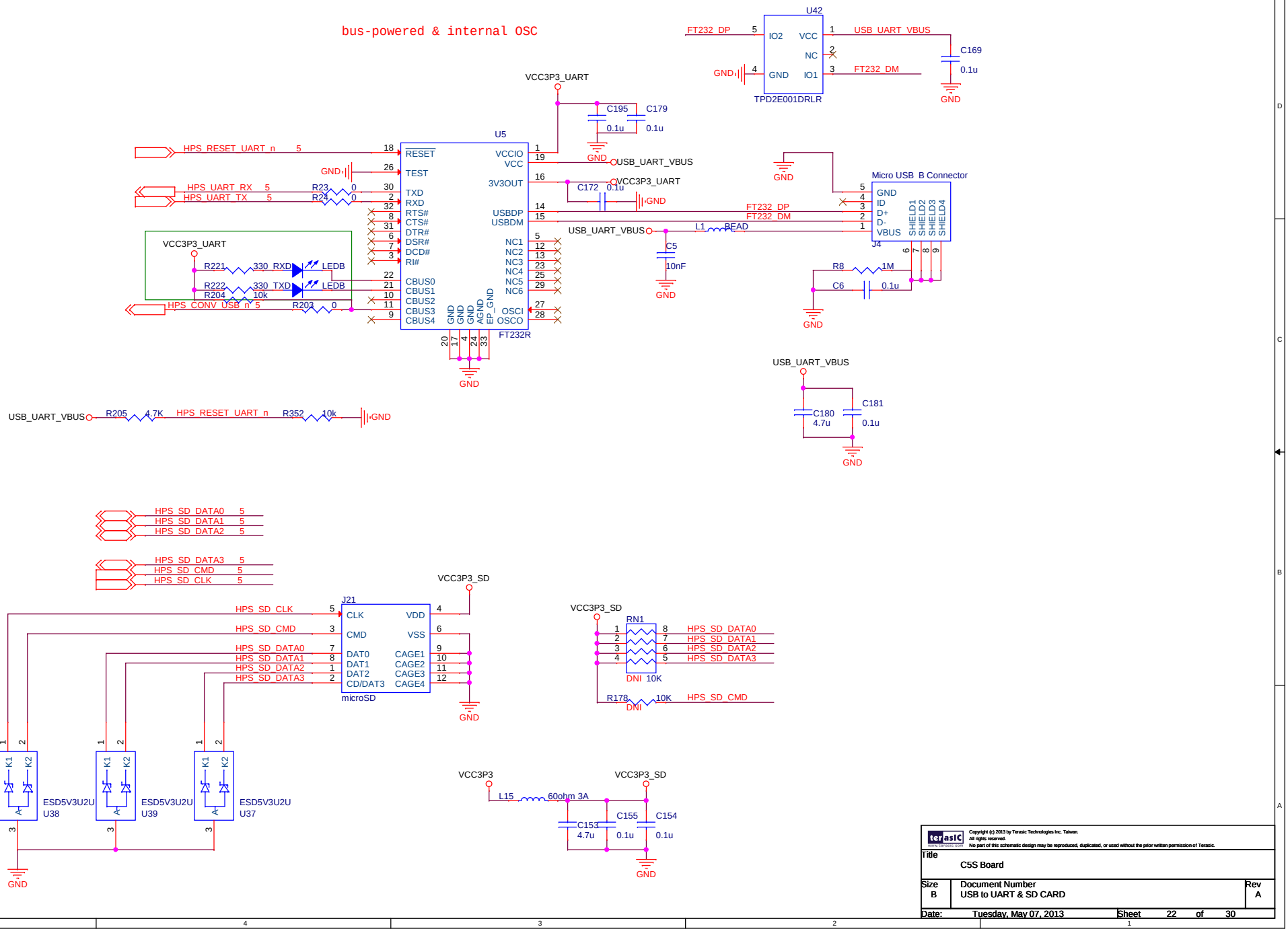

Copyright (c) 2013 by Terasic Technologies Inc. Taiwan.
All rights reserved.
No part of this schematic design may be reproduced, duplicated, or used without the prior written permission of Terasic.

Title	C5S Board	
Size B	Document Number USB to UART & SD CARD	Rev A
Date: Tuesday, May 07, 2013	Sheet 22 of 30	

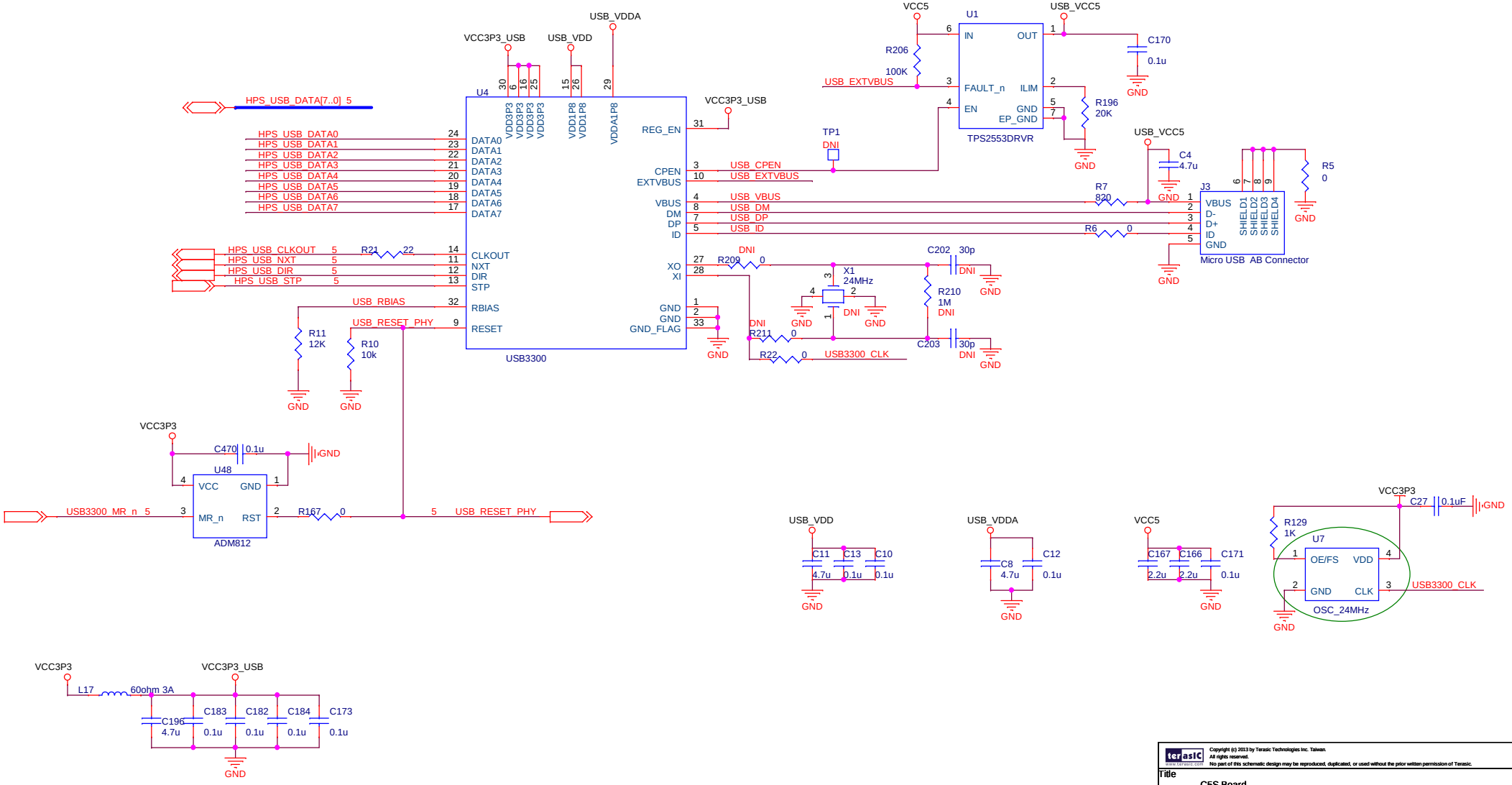

Copyright (c) 2013 by Terasic Technologies Inc. Taiwan.
All rights reserved.
No part of this schematic design may be reproduced, duplicated, or used without the prior written permission of Terasic.

Title	C5S Board	
Size B	Document Number USB3300	Rev A
Date: Tuesday, May 07, 2013	Sheet 23 of 30	

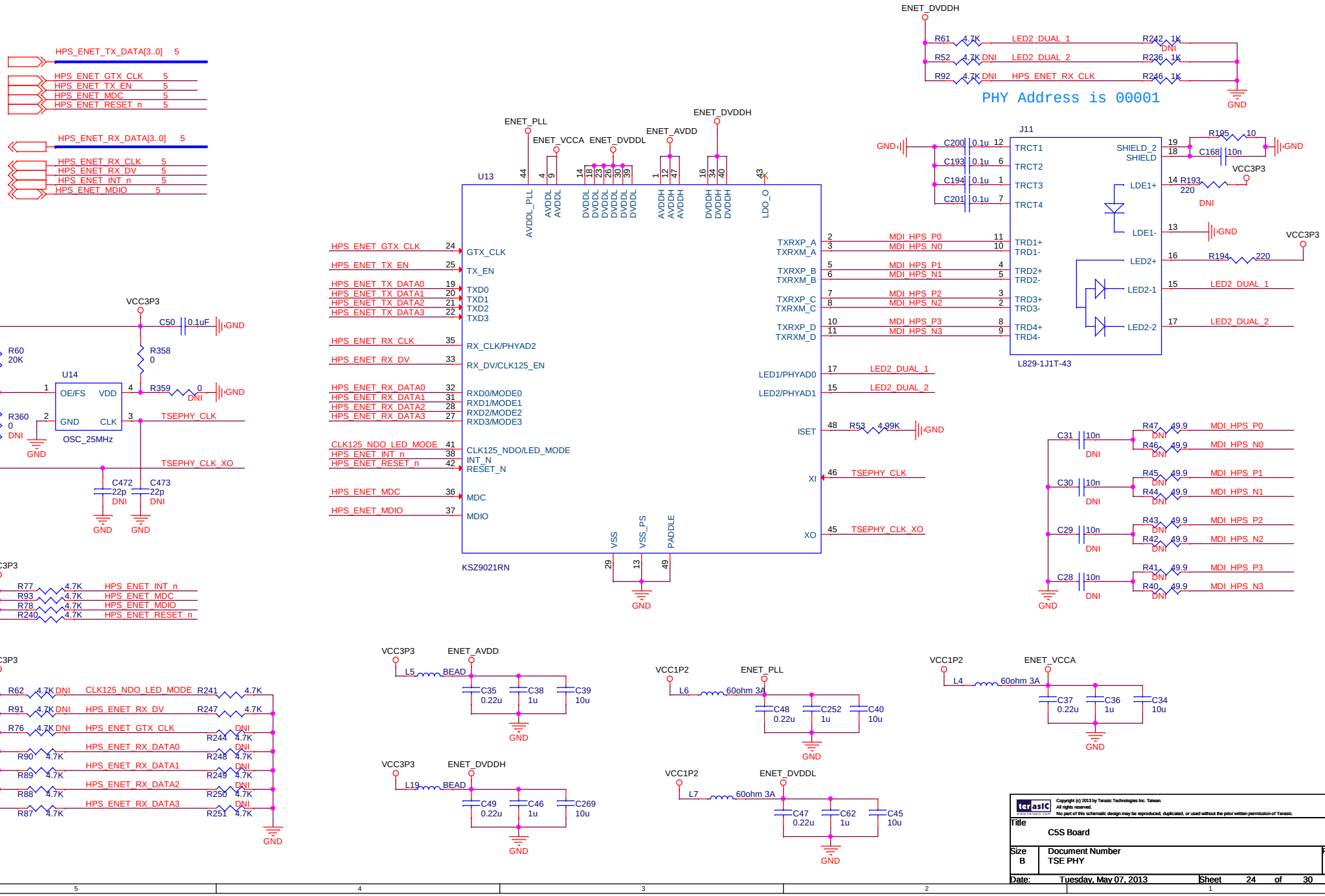
HPS_ENET_TX_DATA[3..0] 5
HPS_ENET_GTX_CLK 5
HPS_ENET_TX_EN 5
HPS_ENET_MDC 5
HPS_ENET_RESET_n 5
HPS_ENET_RX_DATA[3..0] 5
HPS_ENET_RX_CLK 5
HPS_ENET_RX_DV 5
HPS_ENET_INT_n 5
HPS_ENET_MDIO 5
ENET_DVDDH
R61 4.7K LED2_DUAL_1 R242 1K DNI
R52 4.7K DNI LED2_DUAL_2 R236 1K
R92 4.7K DNI HPS_ENET_RX_CLK R246 1K
PHY Address is 00001
GND
ENET_PLL
ENET_VCCA
ENET_DVDDL
ENET_AVDD
ENET_DVDDH
U13
AVDDL_PLL
AVDDL
AVDDL
DVDDL
DVDDL
DVDDL
DVDDL
DVDDL
AVDDH
AVDDH
AVDDH
DVDDH
DVDDH
DVDDH
LDO_O
HPS_ENET_GTX_CLK 24 GTX_CLK
HPS_ENET_TX_EN 25 TX_EN
HPS_ENET_TX_DATA0 19 TXD0
HPS_ENET_TX_DATA1 20 TXD1
HPS_ENET_TX_DATA2 21 TXD2
HPS_ENET_TX_DATA3 22 TXD3
HPS_ENET_RX_CLK 35 RX_CLK/PHYAD2
HPS_ENET_RX_DV 33 RX_DV/CLK125_EN
HPS_ENET_RX_DATA0 32 RXD0/MODE0
HPS_ENET_RX_DATA1 31 RXD1/MODE1
HPS_ENET_RX_DATA2 28 RXD2/MODE2
HPS_ENET_RX_DATA3 27 RXD3/MODE3
CLK125_NDO_LED_MODE 41 CLK125_NDO/LED_MODE
HPS_ENET_INT_n 38 INT_N
HPS_ENET_RESET_n 42 RESET_N
HPS_ENET_MDC 36 MDC
HPS_ENET_MDIO 37 MDIO
TXRXP_A 2 MDI_HPS_P0
TXRXM_A 3 MDI_HPS_N0
TXRXP_B 5 MDI_HPS_P1
TXRXM_B 6 MDI_HPS_N1
TXRXP_C 7 MDI_HPS_P2
TXRXM_C 8 MDI_HPS_N2
TXRXP_D 10 MDI_HPS_P3
TXRXM_D 11 MDI_HPS_N3
LED1/PHYAD0 17 LED2_DUAL_1
LED2/PHYAD1 15 LED2_DUAL_2
ISET 48 R53 4.99K GND
XI 46 TSEPHY_CLK
XO 45 TSEPHY_CLK_XO
VSS
VSS_PS
PADDLE
29
13
49
GND
KSZ9021RN
J11
GND
C200 0.1u 12
C193 0.1u 6
C194 0.1u 1
C201 0.1u 7
TRCT1
TRCT2
TRCT3
TRCT4
TRD1+
TRD1-
TRD2+
TRD2-
TRD3+
TRD3-
TRD4+
TRD4-
SHIELD_2
SHIELD
R195 10
C168 10n
GND
VCC3P3
LDE1+
R193 220 DNI
LDE1-
GND
VCC3P3
LED2+
R194 220
LED2-1
LED2_DUAL_1
LED2-2
LED2_DUAL_2
L829-1J1T-43
VCC3P3
C50 0.1uF GND
R60 20K
R358 0
U14
OE/FS
VDD
GND
CLK
R359 0 DNI GND
R360 0 DNI
TSEPHY_CLK
OSC_25MHz
GND
TSEPHY_CLK_XO
C472 22p DNI
C473 22p DNI
GND
GND
C31 10n DNI
C30 10n DNI
C29 10n DNI
C28 10n DNI
R47 49.9 DNI MDI_HPS_P0
R46 49.9 DNI MDI_HPS_N0
R45 49.9 DNI MDI_HPS_P1
R44 49.9 DNI MDI_HPS_N1
R43 49.9 DNI MDI_HPS_P2
R42 49.9 DNI MDI_HPS_N2
R41 49.9 DNI MDI_HPS_P3
R40 49.9 DNI MDI_HPS_N3
GND
VCC3P3
R77 4.7K HPS_ENET_INT_n
R93 4.7K HPS_ENET_MDC
R78 4.7K HPS_ENET_MDIO
R240 4.7K HPS_ENET_RESET_n
VCC3P3
R62 4.7K DNI CLK125_NDO_LED_MODE
R91 4.7K DNI HPS_ENET_RX_DV
R76 4.7K DNI HPS_ENET_GTX_CLK
HPS_ENET_RX_DATA0
HPS_ENET_RX_DATA1
HPS_ENET_RX_DATA2
HPS_ENET_RX_DATA3
R90 4.7K
R89 4.7K
R88 4.7K
R87 4.7K
R241 4.7K
R247 4.7K
R244 4.7K DNI
R248 4.7K DNI
R249 4.7K DNI
R250 4.7K DNI
R251 4.7K DNI
GND
VCC3P3
ENET_AVDD
L5 BEAD
C35 0.22u
C38 1u
C39 10u
GND
VCC3P3
ENET_DVDDH
L19 BEAD
C49 0.22u
C46 1u
C269 10u
GND
VCC1P2
ENET_PLL
L6 60ohm 3A
C48 0.22u
C252 1u
C40 10u
GND
VCC1P2
ENET_DVDDL
L7 60ohm 3A
C47 0.22u
C62 1u
C45 10u
GND
VCC1P2
ENET_VCCA
L4 60ohm 3A
C37 0.22u
C36 1u
C34 10u
GND
Copyright (c) 2013 by Terasic Technologies Inc. Taiwan.
All rights reserved.
No part of this schematic design may be reproduced, duplicated, or used without the prior written permission of Terasic.
Title
C5S Board
Size B
Document Number
TSE PHY
Rev A
Date: Tuesday, May 07, 2013
Sheet 24 of 30

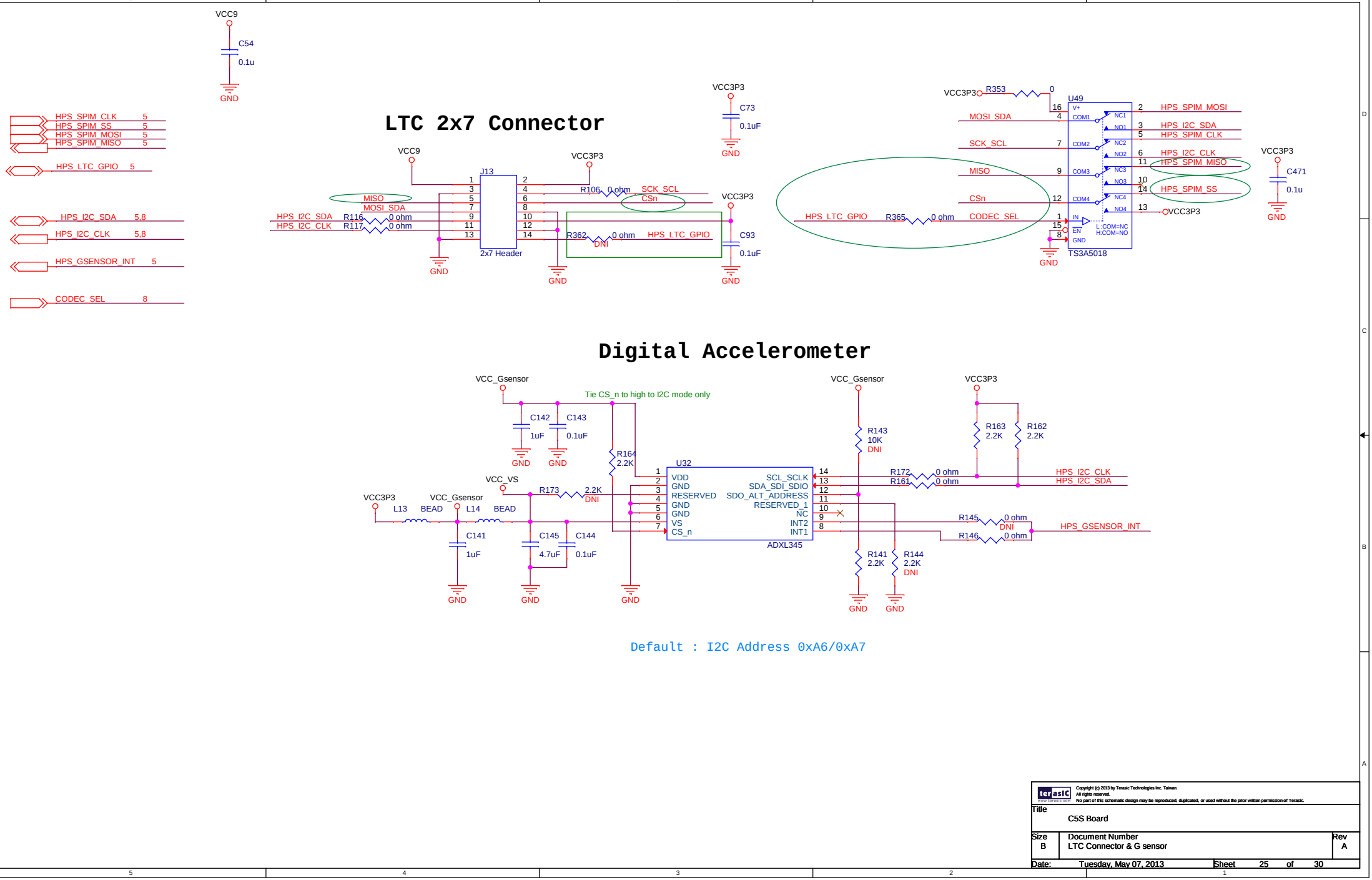
VCC9
C54
0.1u
GND
HPS_SPIM_CLK 5
HPS_SPIM_SS 5
HPS_SPIM_MOSI 5
HPS_SPIM_MISO 5
HPS_LTC_GPIO 5
HPS_I2C_SDA 5,8
HPS_I2C_CLK 5,8
HPS_GSENSOR_INT 5
CODEC_SEL 8
LTC 2x7 Connector
VCC3P3
C73
0.1uF
J13
2x7 Header
MISO
MOSI_SDA
HPS_I2C_SDA
HPS_I2C_CLK
R116 0 ohm
R117 0 ohm
R106 0 ohm
SCK_SCL
CSn
R362 0 ohm
DNI
HPS_LTC_GPIO
C93
R353 0
U49
TS3A5018
NC1
NO1
NC2
NO2
NC3
NO3
NC4
NO4
COM1
COM2
COM3
COM4
IN
EN
L:COM=NC
H:COM=NO
HPS_SPIM_MOSI
HPS_I2C_SDA
HPS_SPIM_CLK
HPS_I2C_CLK
HPS_SPIM_MISO
HPS_SPIM_SS
C471
R365 0 ohm
Digital Accelerometer
VCC_Gsensor
Tie CS_n to high to I2C mode only
C142 1uF
C143 0.1uF
R164 2.2K
U32
VDD
GND
RESERVED
GND
GND
VS
CS_n
SCL_SCLK
SDA_SDI_SDIO
SDO_ALT_ADDRESS
RESERVED_1
NC
INT2
INT1
ADXL345
VCC_VS
R173 2.2K
DNI
L13 BEAD
L14 BEAD
C141 1uF
C145 4.7uF
C144 0.1uF
R143 10K
R163 2.2K
R162 2.2K
R172 0 ohm
R161 0 ohm
R145 0 ohm
R146 0 ohm
R141 2.2K
R144 2.2K
Default : I2C Address 0xA6/0xA7
Copyright (c) 2013 by Terasic Technologies Inc. Taiwan.
All rights reserved.
No part of this schematic design may be reproduced, duplicated, or used without the prior written permission of Terasic.
Title
C5S Board
Size B
Document Number
LTC Connector & G sensor
Rev A
Date: Tuesday, May 07, 2013
Sheet 25 of 30

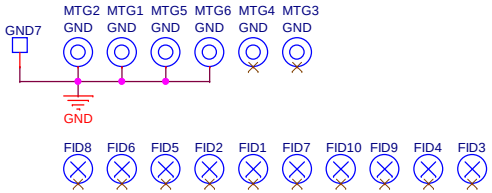

9V / 50mA

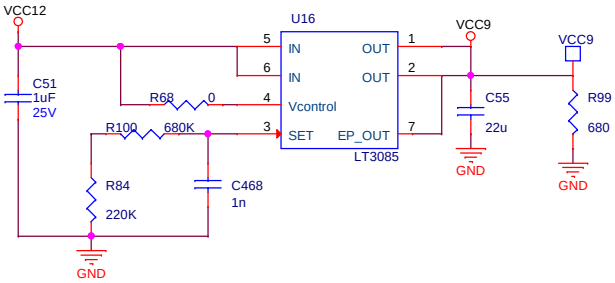

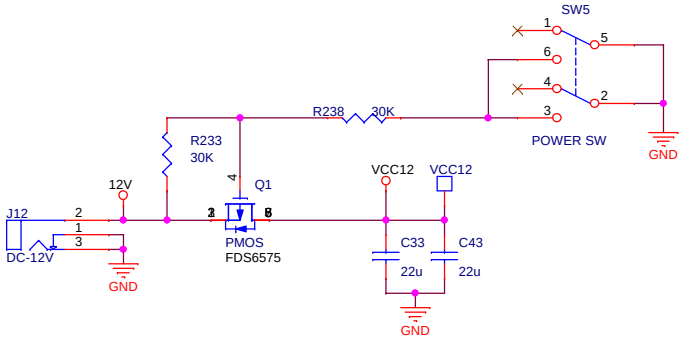

5V / 1.5A

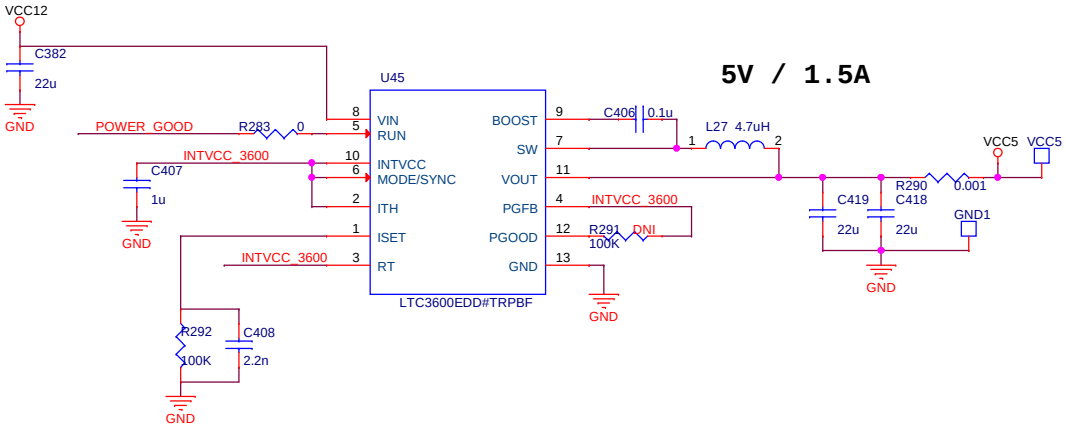

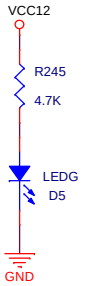

POWER_GOOD 27,28

Copyright (c) 2013 by Terasic Technologies Inc. Taiwan.
All rights reserved.
No part of this schematic design may be reproduced, duplicated, or used without the prior written permission of Terasic.

Title	C5S Board	
Size B	Document Number Power - 9V & 5V	Rev A
Date: Tuesday, May 07, 2013	Sheet 26 of 30	

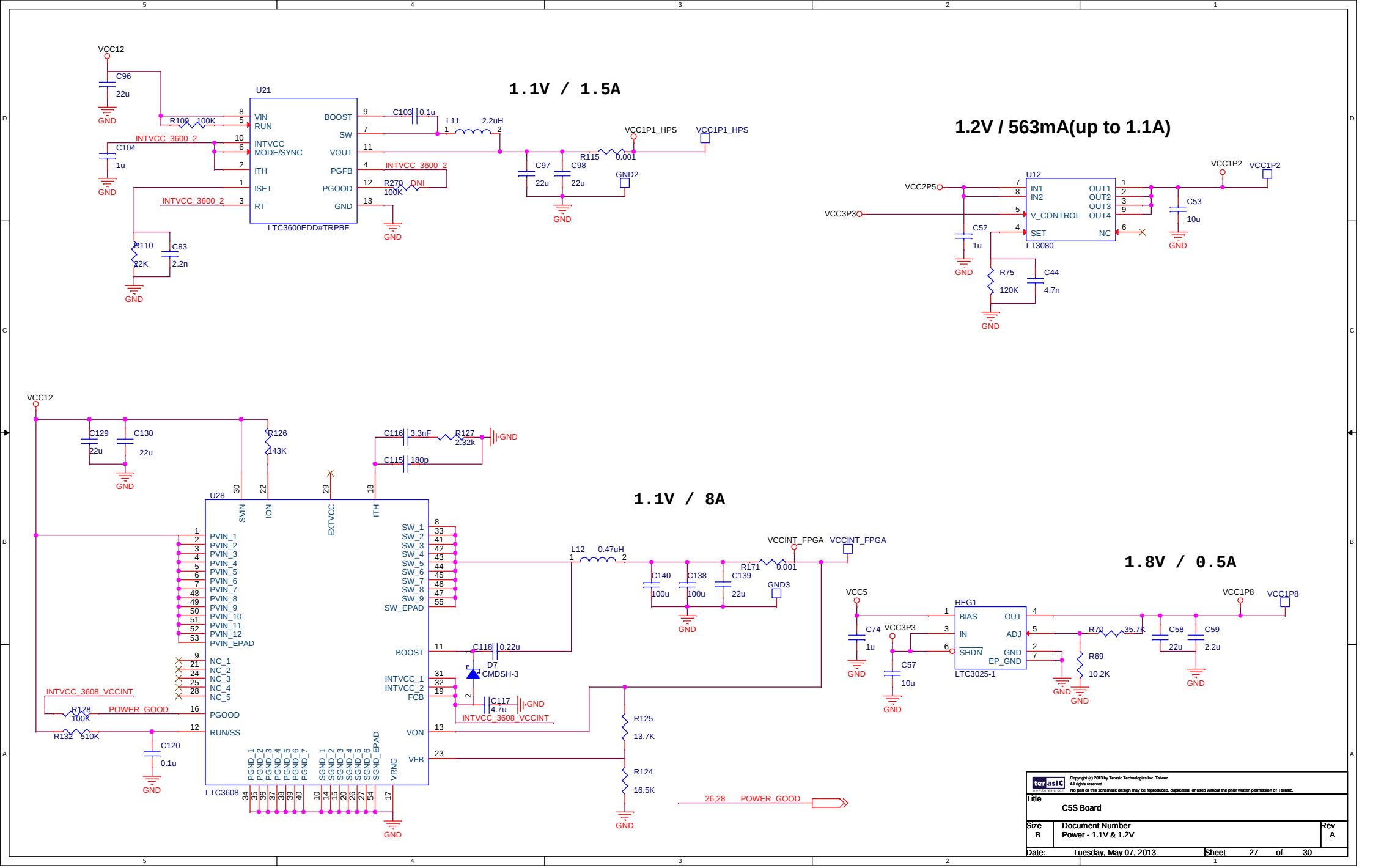
1.1V / 1.5A
VCC12
C96
22u
U21
VIN
RUN
INTVCC
MODE/SYNC
ITH
ISET
RT
BOOST
SW
VOUT
PGFB
PGOOD
GND
LTC3600EDD#TRPBF
R109 100K
C104
1u
INTVCC_3600_2
C103 0.1u
L11 2.2uH
VCC1P1_HPS
C97 22u
C98 22u
R115 0.001
GND2
R270 DNI
100K
R110 22K
C83 2.2n
1.2V / 563mA(up to 1.1A)
VCC2P5
VCC3P3
U12
IN1
IN2
V_CONTROL
SET
OUT1
OUT2
OUT3
OUT4
NC
LT3080
C52 1u
C53 10u
VCC1P2
R75 120K
C44 4.7n
1.1V / 8A
U28
SVIN
ION
EXTVCC
ITH
PVIN_1
PVIN_2
PVIN_3
PVIN_4
PVIN_5
PVIN_6
PVIN_7
PVIN_8
PVIN_9
PVIN_10
PVIN_11
PVIN_12
PVIN_EPAD
NC_1
NC_2
NC_3
NC_4
NC_5
PGOOD
RUN/SS
SW_1
SW_2
SW_3
SW_4
SW_5
SW_6
SW_7
SW_8
SW_9
SW_EPAD
BOOST
INTVCC_1
INTVCC_2
FCB
VON
VFB
VRNG
PGND_1
PGND_2
PGND_3
PGND_4
PGND_5
PGND_6
PGND_7
SGND_1
SGND_2
SGND_3
SGND_4
SGND_5
SGND_6
SGND_EPAD
LTC3608
C129 22u
C130 22u
R126 143K
C116 3.3nF
R127 2.32k
C115 180p
INTVCC_3608_VCCINT
R128 100K
R132 510K
POWER_GOOD
C120 0.1u
L12 0.47uH
VCCINT_FPGA
C140 100u
C138 100u
C139 22u
R171 0.001
GND3
C118 0.22u
D7 CMDSH-3
C117 4.7u
R125 13.7K
R124 16.5K
26,28 POWER_GOOD
1.8V / 0.5A
VCC5
REG1
BIAS
IN
SHDN
OUT
ADJ
GND
EP_GND
LTC3025-1
C74 1u
C57 10u
R70 35.7K
R69 10.2K
C58 22u
C59 2.2u
VCC1P8
Title
C5S Board
Size B
Document Number
Power - 1.1V & 1.2V
Rev A
Date: Tuesday, May 07, 2013
Sheet 27 of 30

2.5V / 1.5A

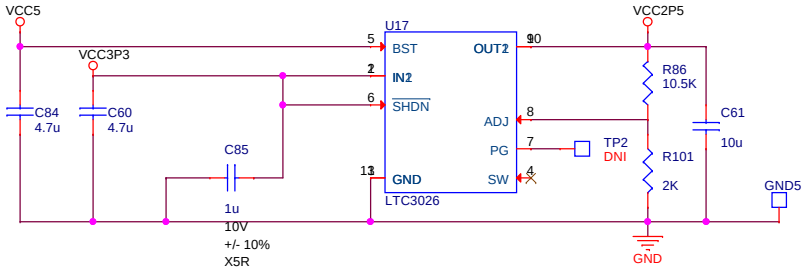

3.3V / 8A

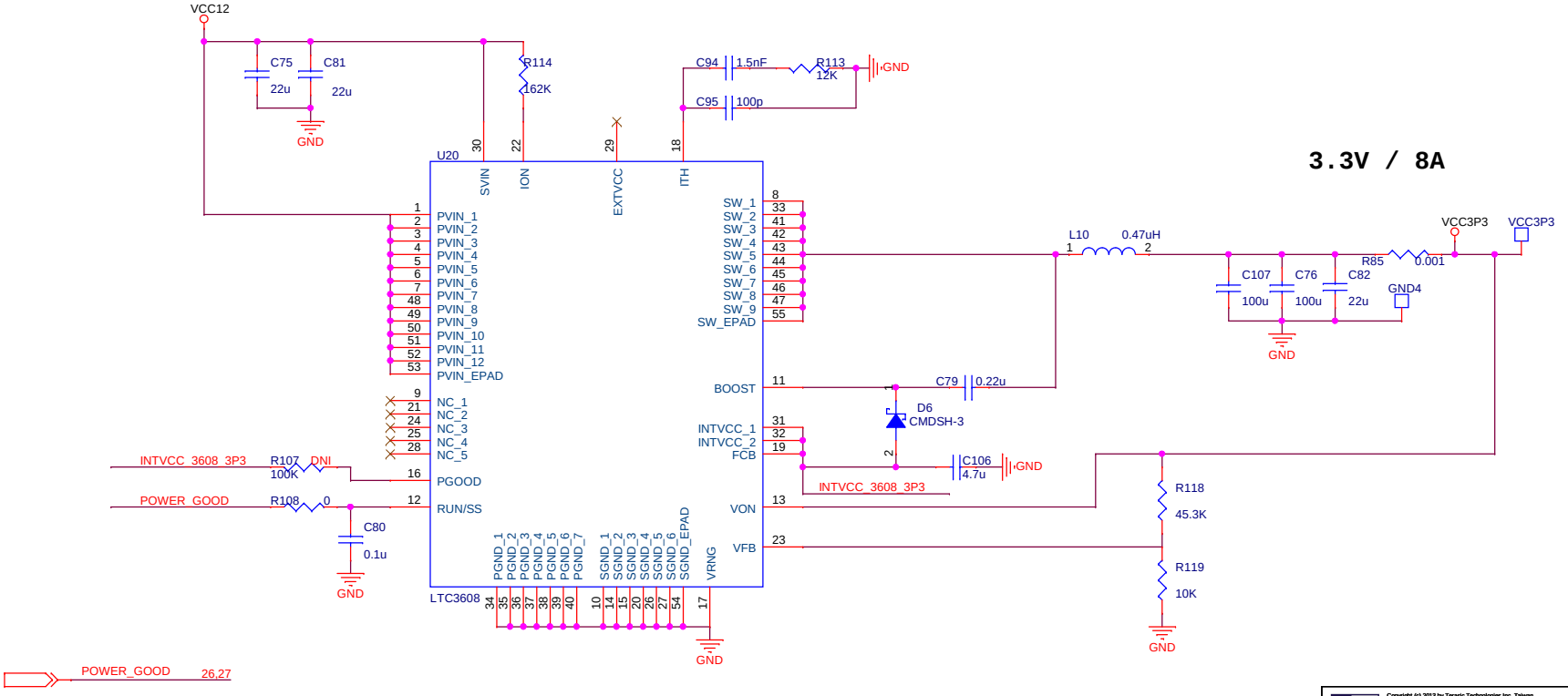

Copyright (c) 2013 by Terasic Technologies Inc. Taiwan.
All rights reserved.
No part of this schematic design may be reproduced, duplicated, or used without the prior written permission of Terasic.

Title	C5S Board	
Size B	Document Number Power - 3.3V & 2.5V	Rev A
Date: Tuesday, May 07, 2013	Sheet 28 of 30	

DDR3L VDD,VDDQ

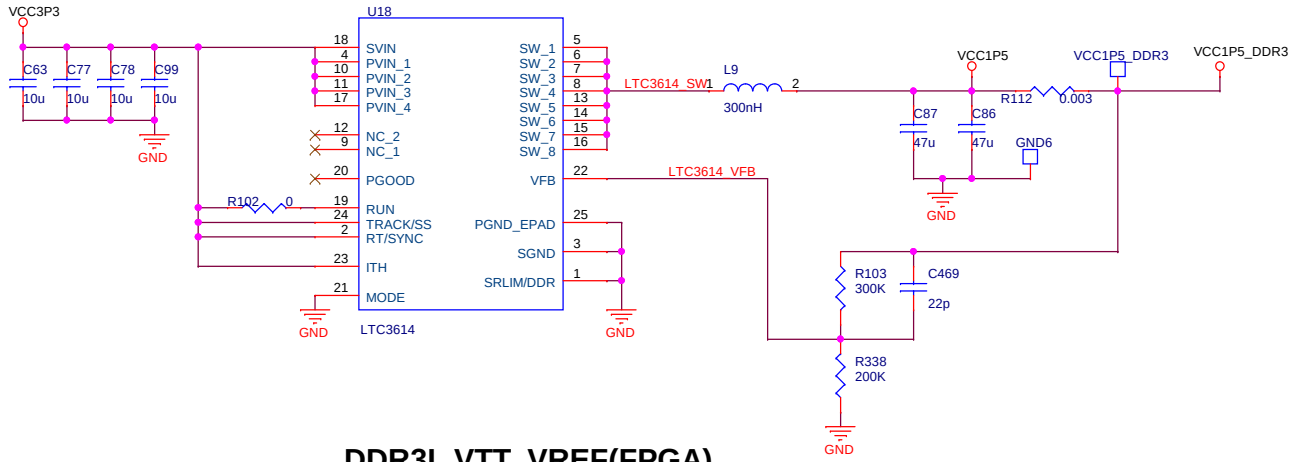

1.5V / 4A

DDR3L VTT, VREF(FPGA)

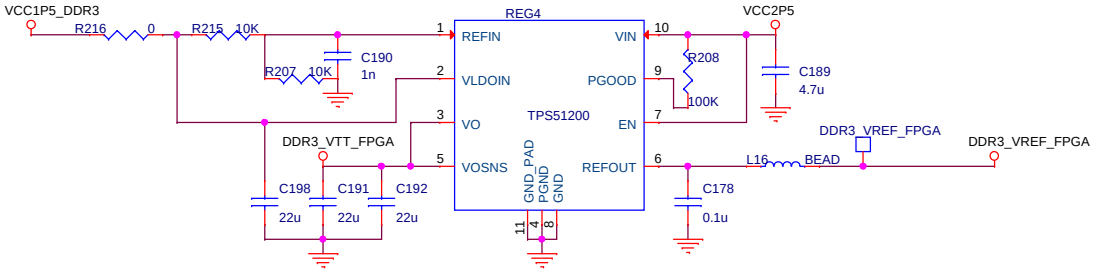

DDR3L VTT, VREF(HPS)

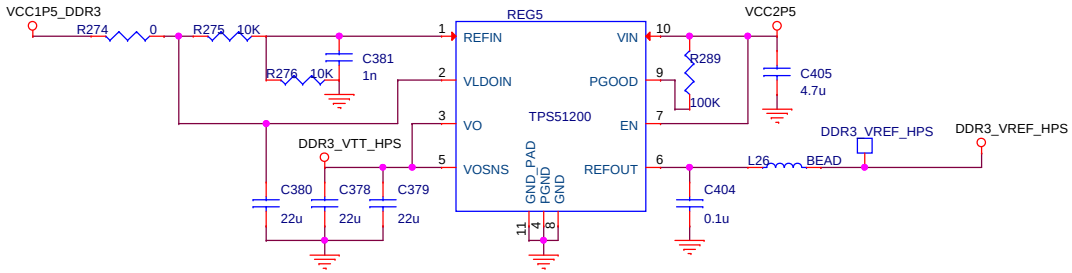

Copyright (c) 2013 by Terasic Technologies Inc. Taiwan.
All rights reserved.
No part of this schematic design may be reproduced, duplicated, or used without the prior written permission of Terasic.

Title	C5S Board	
Size B	Document Number Power - 1.5V	Rev A
Date: Tuesday, May 07, 2013	Sheet 29 of 30	

HSMC_VCCIO / 0.5A

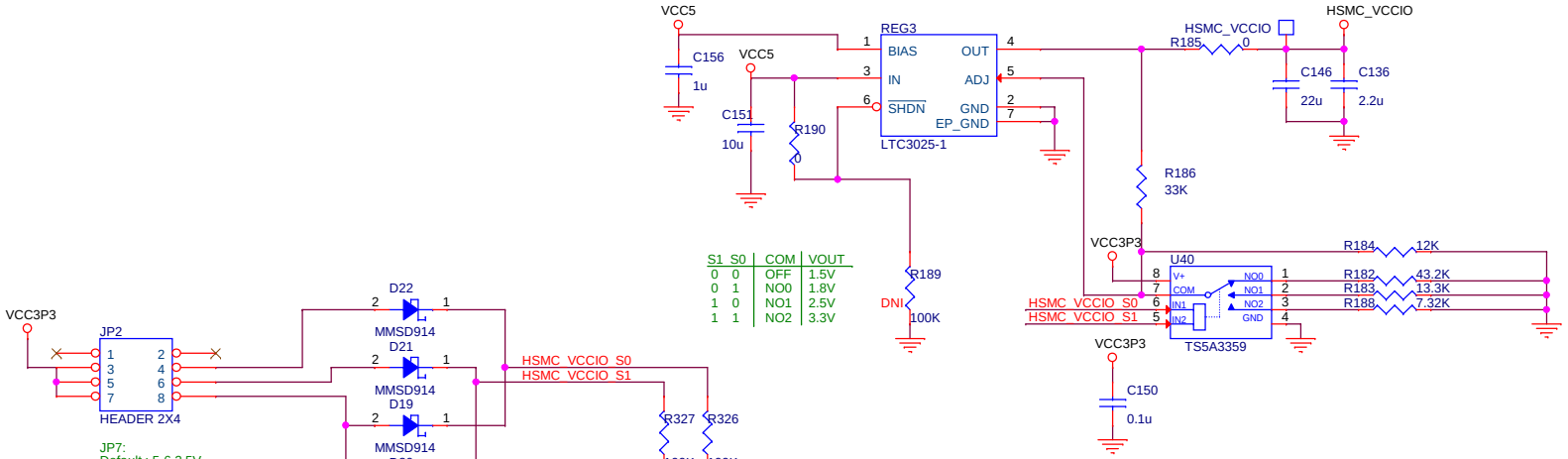

HSMC_VCCPD / 0.5A

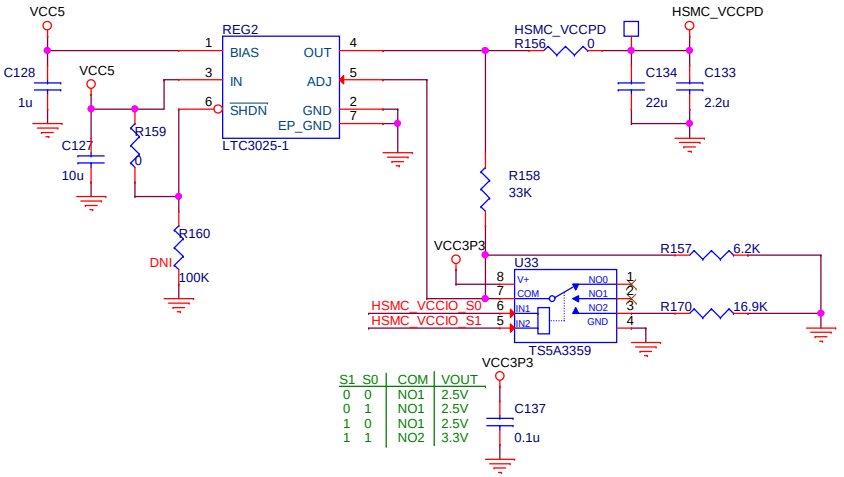

JUMPER2
Jumper

For JP2 HSMC VCIO Control Header

JUMPER5
Jumper

JUMPER6
Jumper

For J17 J18 J19 BOOTSEL

JUMPER3
Jumper

For J15 J16 CLKSEL

JUMPER7
Jumper

JUMPER4
Jumper

Copyright (c) 2013 by Terasic Technologies Inc. Taiwan.
All rights reserved.
No part of this schematic design may be reproduced, duplicated, or used without the prior written permission of Terasic.

Title	C5S Board	
Size B	Document Number Power - VCCIO_HSMC	Rev A
Date: Tuesday, May 07, 2013	Sheet 30 of 30	