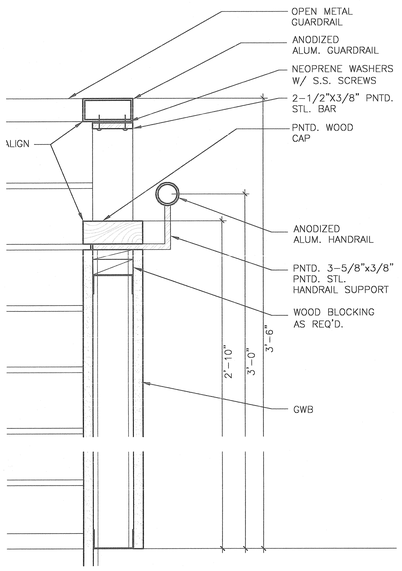

7 GUARDRAIL/HANDRAIL DETAIL
3" = 1'-0"

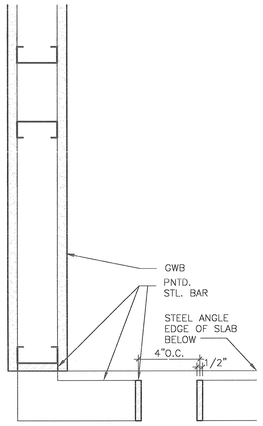

6 GUARDRAIL/HANDRAIL DETAIL
3" = 1'-0"

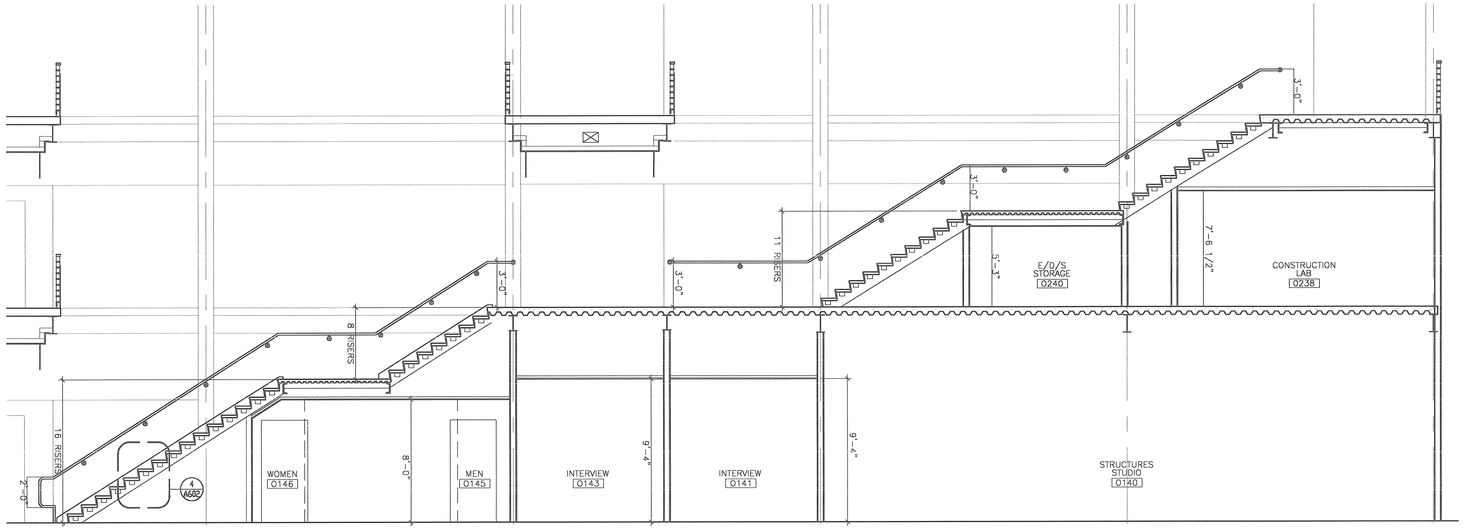

5 ATRIUM STAIR SECTION
1/4" = 1'-0"

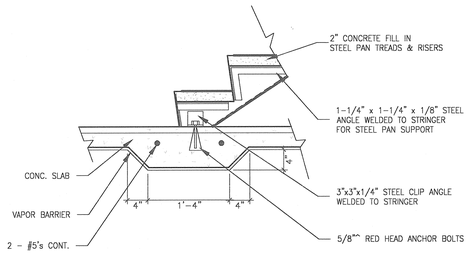

4 STAIR DETAIL
1" = 1'-0"

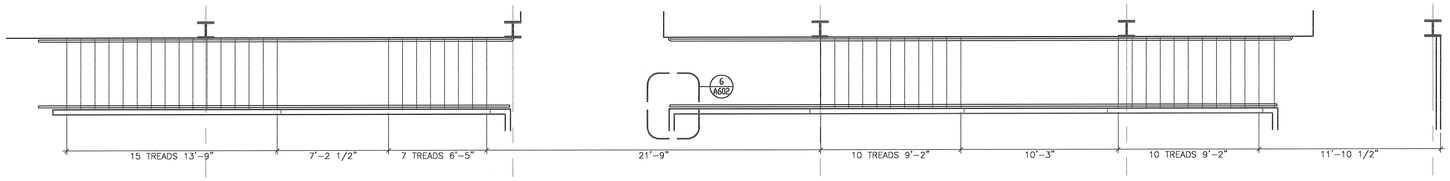

3 ATRIUM STAIR PLAN
1/4" = 1'-0"

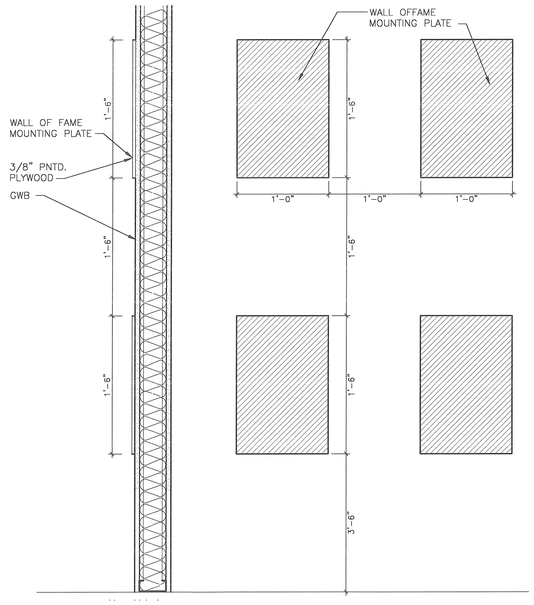

2 WALL OF FAME DETAIL
1-1/2" = 1'-0"

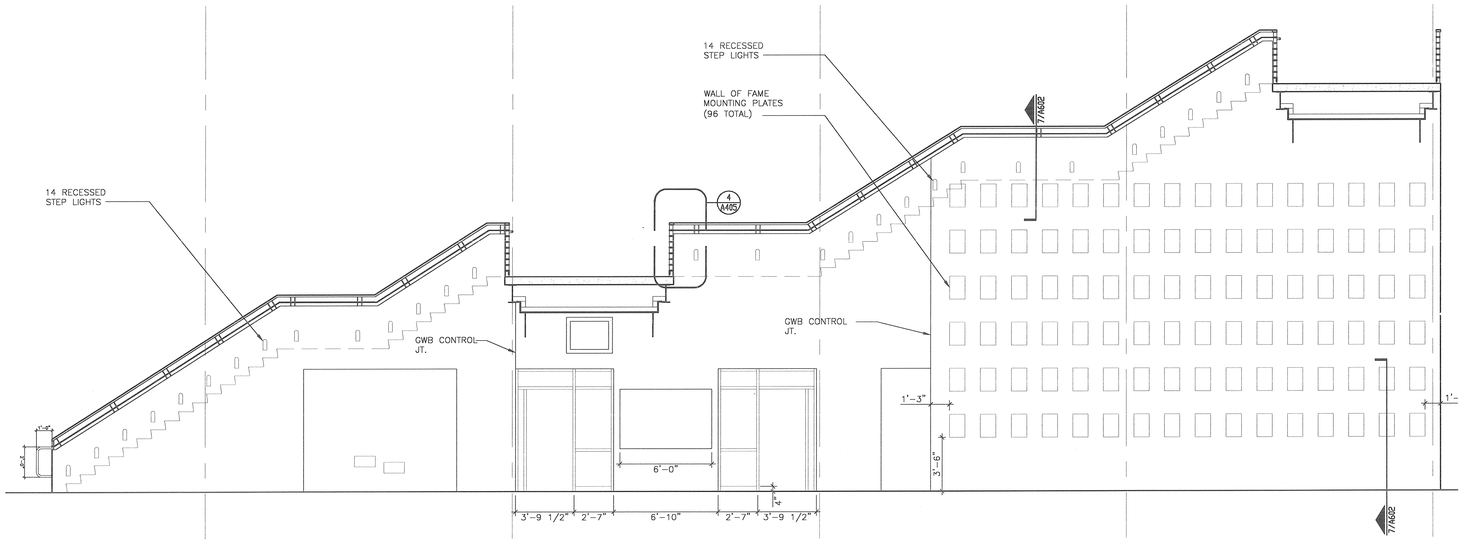

1 ATRIUM STAIR ELEVATION
1/4" = 1'-0"

M.E. RINKER, SR. SCHOOL OF BUILDING CONSTRUCTION

M.E. RINKER, Sr. HALL
SCHOOL OF BUILDING CONSTRUCTION

UNIVERSITY OF FLORIDA-GAINESVILLE
PROJECT NO. BR-191

ARCHITECTS
CROXTON COLLABORATIVE/
GOULD EVANS ASSOCIATES

CROXTON COLLABORATIVE ARCHITECTS
475 FIFTH AVENUE
NEW YORK, NY 10017
TEL 212.683.1998
FAX 212.683.2799

GOULD EVANS ASSOCIATES
5405 WEST CYPRESS STREET
TAMPA, FL 33607
TEL 813.288.0729
FAX 813.288.0231

MECHANICAL ENGINEERS
LEHR ASSOCIATES
130 WEST 30TH STREET
NEW YORK, NY 10001-4092
TEL 212.947.8050
FAX 212.967.2059

STRUCTURAL ENGINEERS
WALTER P. MOORE
201 EAST KENNEDY BOULEVARD
TAMPA, FL 33602
TEL 813.221.2424
FAX 813.221.2289

CIVIL ENGINEERS
BROWN & CULLEN, INC.
3530 NW 43 STREET
GAINESVILLE, FL 32605
TEL 352.375.8999
FAX 352.375.0633

LANDSCAPE ENGINEERS
McCLAIN DESIGN GROUP, INC.
1843 NW 39 DRIVE
GAINESVILLE, FL 32605
TEL 352.372.2808
FAX 352.372.6622

CONSULTANT
SEEGY-BISCH
AUSSERE SULZBACHER STR. 118
NURNBERG, GERMANY
TEL 0911/59 90 99
FAX 0911/59 98 05

THIS DRAWING, AS AN INSTRUMENT OF SERVICE, IS AND SHALL REMAIN, PROPERTY OF CROXTON COLLABORATIVE ARCHITECTS. THIS DRAWING SHALL NOT BE REPRODUCED, PUBLISHED, USED ON OTHER PROJECTS, USED FOR ADDITIONS, OR USED IN COMPLETION OF THIS PROJECT BY OTHERS EXCEPT BY AGREEMENT IN WRITING. © 2001 CROXTON COLLABORATIVE ARCHITECTS/ GOULD EVANS ASSOCIATES.

NO.	ISSUE/REVISION	DATE

100% CONSTRUCTION DOCUMENTS

DRAWING NAME
ATRIUM STAIR PLANS, SECTIONS, & ELEVATIONS

DATE 11/21/01
SCALE 1/4"=1'-0"
DRAWN BY/CHECKED BY DLH

A602

N:\Rinker Hall\Construction Documents\cadfiles\A-602.dwg Tue Nov 20 03:02:42 2001