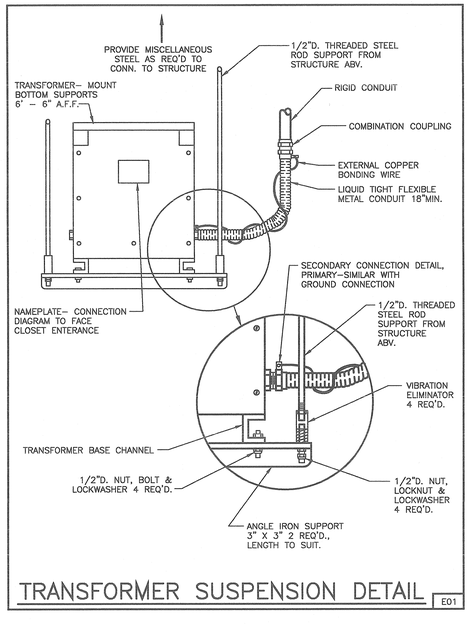

TRANSFORMER SUSPENSION DETAIL E01

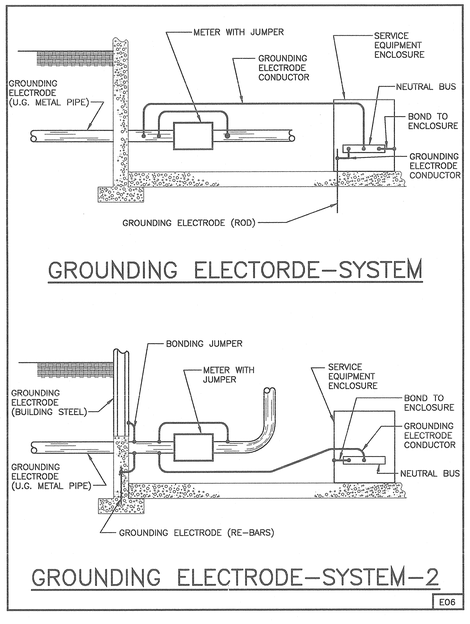

GROUNDING ELECTORDE-SYSTEM

GROUNDING ELECTRODE-SYSTEM-2 E06

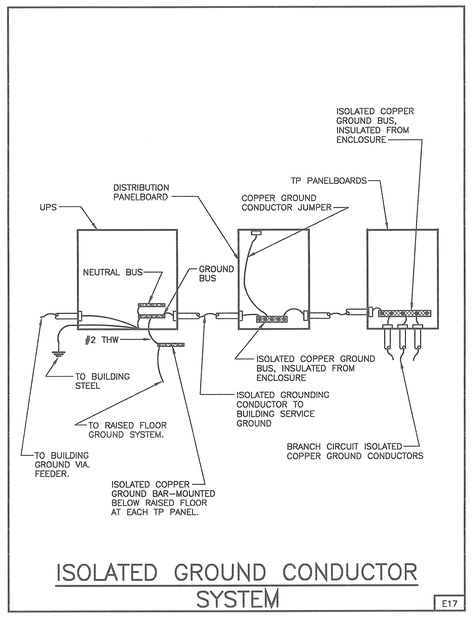

ISOLATED GROUND CONDUCTOR SYSTEM E17

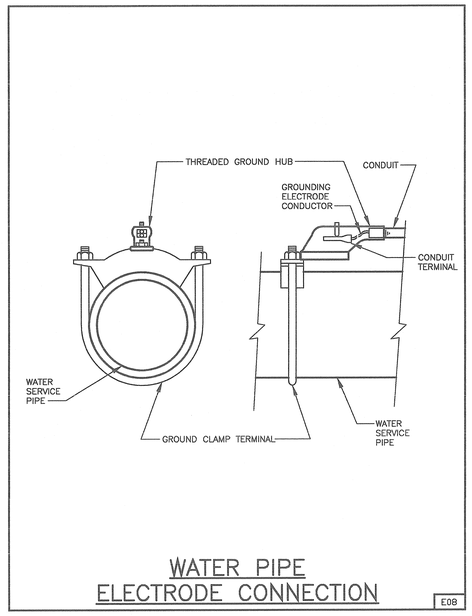

WATER PIPE ELECTRODE CONNECTION E08

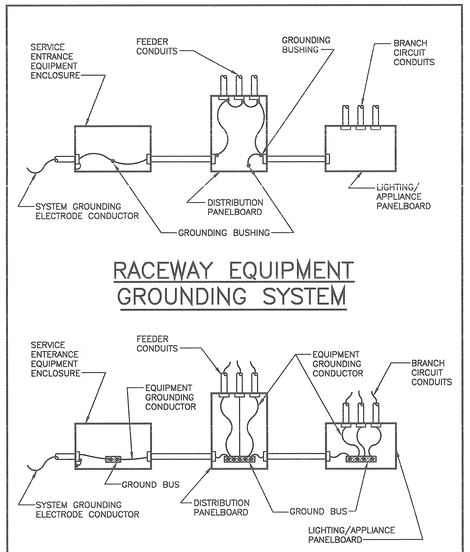

RACEWAY EQUIPMENT GROUNDING SYSTEM

SEPARATE CONDUCTOR EQUIPMENT GROUNDING SYSTEM E09

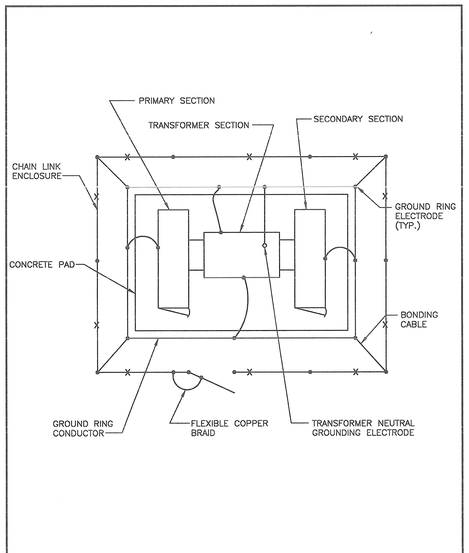

EXTERIOR SUBSTATION GROUNDING E11

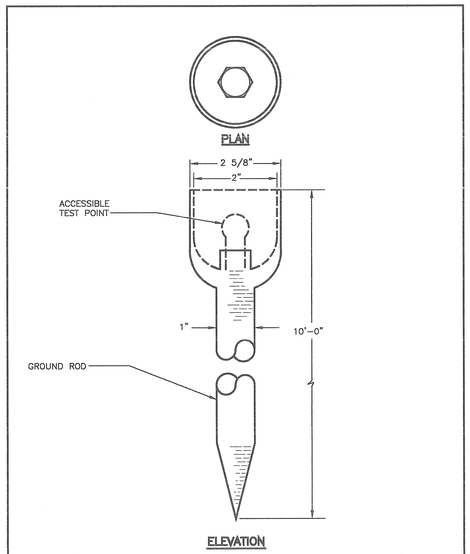

ACCESSIBLE GROUND ROD E15

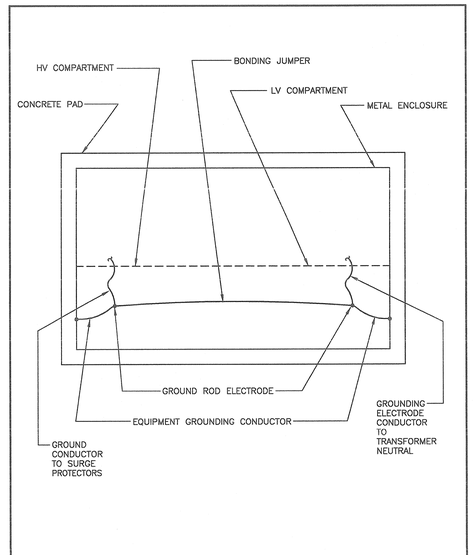

PAD MOUNTED TRANSFORMER GROUNDING E16

M.E. RINKER, Sr. HALL
SCHOOL OF BUILDING CONSTRUCTION

UNIVERSITY OF FLORIDA-GAINESVILLE
PROJECT NO. BR-191

ARCHITECTS
CROXTON COLLABORATIVE/
GOULD EVANS ASSOCIATES

CROXTON COLLABORATIVE ARCHITECTS
475 FIFTH AVENUE
NEW YORK, NY 10017
TEL 212.683.1998
FAX 212.683.2799

GOULD EVANS ASSOCIATES
5405 WEST CYPRESS STREET
TAMPA, FL 33607
TEL 813.288.0729
FAX 813.288.0231

MECHANICAL ENGINEERS
LEHR ASSOCIATES
130 WEST 30TH STREET
NEW YORK, NY 10001-4092
TEL 212.947.8050
FAX 212.967.2059

STRUCTURAL ENGINEERS
WALTER P. MOORE
201 EAST KENNEDY BOULEVARD
TAMPA, FL 33602
TEL 813.221.2424
FAX 813.221.2289

CIVIL ENGINEERS
BROWN & CULLEN, INC.
3530 NW 43 STREET
GAINESVILLE, FL 32605
TEL 352.375.8999
FAX 352.375.0833

LANDSCAPE ENGINEERS
McCLAIN DESIGN GROUP, INC.
1843 NW 39 DRIVE
GAINESVILLE, FL 32605
TEL 352.372.2808
FAX 352.372.6622

CONSULTANT
SEEGY-BISCH
AUSSERE SULZBACHER STR. 118
NURNBERG, GERMANY
TEL 0911/59 90 99
FAX 0911/59 98 05

LOUIS J. LAVY
LICENSED
No. 19918
STATE OF FLORIDA
PROFESSIONAL ENGINEER

THIS DRAWING, AS AN INSTRUMENT OF SERVICE, IS AND SHALL REMAIN, PROPERTY OF CROXTON COLLABORATIVE ARCHITECTS. THIS DRAWING SHALL NOT BE REPRODUCED, PUBLISHED, USED ON OTHER PROJECTS, USED FOR ADDITIONS, OR USED IN COMPLETION OF THIS PROJECT BY OTHERS EXCEPT BY AGREEMENT IN WRITING. ©2001 CROXTON COLLABORATIVE ARCHITECTS/ GOULD EVANS ASSOCIATES.

NO.	ISSUE/REVISION	DATE

100% CONSTRUCTION DOCUMENTS

DRAWING NAME
ELECTRICAL DETAILS

DATE 11/21/01
SCALE NTS
DRAWN BY/CHECKED BY BOC/JH
DRAWING NUMBER E002

G:\4440\ELEC\4440E002DET.dwg Nov 19, 2001 - 18:12:18 nopostal