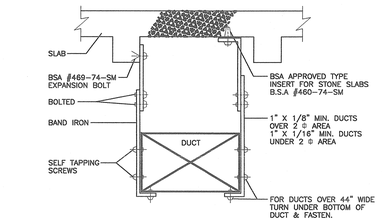

NOTE:
DISTANCE BETWEEN DUCT HANGERS SHALL BE IN ACCORDANCE WITH RS-13-1 OF THE NYC BUILDING CODE.

METHOD OF HANGING DUCTWORK

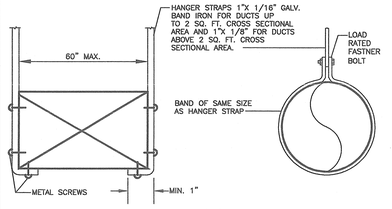

SPACING OF HANGER STRAPS SHALL NOT EXCEED 8'-0" FOR DUCTS 4 SQ. FT. OR LESS, 6'-0" FOR DUCTS 4 SQ. FT. TO 10 SQ. FT. AND 4'-0" FOR DUCTS OVER 10 SQ. FT. OF CROSS SECTIONAL AREA.

STRAP HANGERS

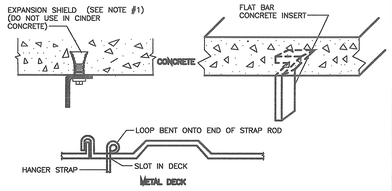

NOTE:
1. FOR N.Y.C. USE BS&A OR MEA APPROVED INSERTS.

DUCT HANGERS UPPER ATTACHMENTS

DUCTWORK SUPPORT DETAILS
(CONCRETE & METAL DECK)

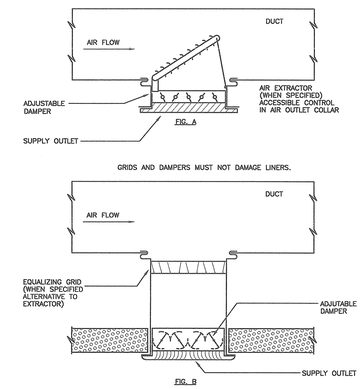

NOTE:
REGISTER CONTAINS VOLUME CONTROL AT GRILLE. GRILLE HAS NO VOLUME CONTROL.

GRILLE FLANGES MUST COVER DUCT FLANGES.

GRILLE AND REGISTER CONNECTIONS
NOT TO SCALE

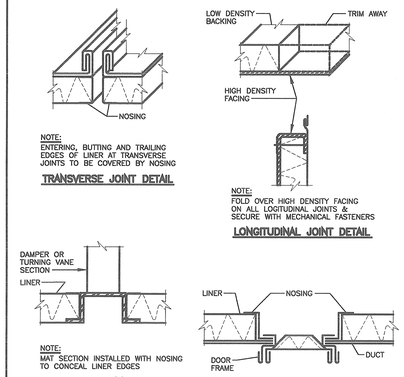

NOTE:
ENTERING, BUTTING AND TRAILING EDGES OF LINER AT TRANSVERSE JOINTS TO BE COVERED BY NOSING

TRANSVERSE JOINT DETAIL

NOTE:
FOLD OVER HIGH DENSITY FACING ON ALL LOGITUDINAL JOINTS & SECURE WITH MECHANICAL FASTENERS

LONGITUDINAL JOINT DETAIL

NOTE:
MAT SECTION INSTALLED WITH NOSING TO CONCEAL LINER EDGES

DETAIL AT DAMPERS AND TURNING VANES

ACCESS DOOR NOSING DETAIL

GENERAL NOTES:
1. NOSING ATTACHED TO DUCT BY RIVETS, SCREWS OR WELDS.
2. NOSING : 24 GA UP TO 48"; OVER 48", SAME GA. AS DUCT.

SOUND LINING NOSING DETAIL

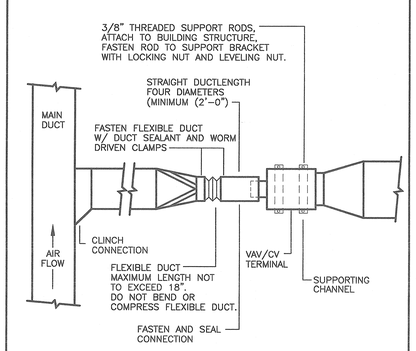

NOTES:
1. CONTRACTOR SHALL COORDINATE WITH MANUFACTURER THE MOUNTING OF CONTROLS TO LEFT OR RIGHT SIDE AS REQUIRED BY FIELD CONDITIONS.
2. ARRANGE ACCESS TO PERMIT EASY FIELD BALANCE AND MAINTENANCE OF TERMINAL UNIT.

TERMINAL UNIT INSTALLATION
NOT TO SCALE

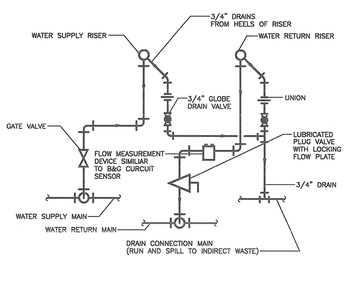

HOT WATER RISER & DRAIN CONNECTIONS
(DIRECT RETURN SYSTEMS)

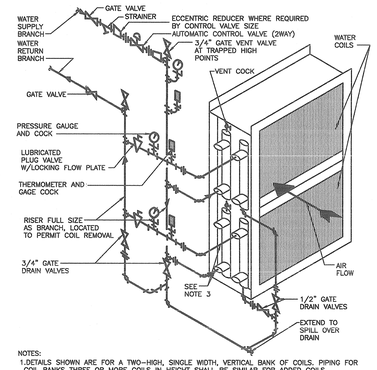

NOTES:
1. DETAILS SHOWN ARE FOR A TWO-HIGH, SINGLE WIDTH, VERTICAL BANK OF COILS. PIPING FOR COIL BANKS THREE OR MORE COILS IN HEIGHT SHALL BE SIMILAR FOR ADDED COILS.
2. FOR TWO-WIDE COIL BANKS, PIPING FOR THE SECOND BANK OF COILS SHALL BE THE SAME AS FOR SINGLE WIDTH, VERTICAL COIL BANK.
3. CONNECTIONS TO COILS INLET & OUTLET SHALL BE FULL SIZE OF COIL TAPPINGS AND SHALL BE PROVIDED WITH UNIONS OR FLANGES TO FACILITATE COIL REMOVALS.
4. MAKE BRANCH PIPING CONNECTIONS TO COIL HEADERS TO ACHIEVE AIR-WATER COUNTERFLOW. PLUG COIL HEADER TAPPINGS THAT ARE NOT CONNECTED TO.
5. FOR COILS BANKS HAVING THREE OR MORE COILS, PROVIDE A LUBRICATED PLUG VALVE IN EACH RETURN BRANCH CONNECTION TO EACH COIL.

2-WAY VALVE PIPING CONNECTIONS TO VERT. BANK OF WATER COILS

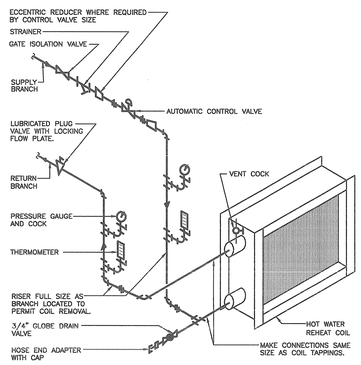

NOTES:
1. DETAILS SHOWN APPLY TO A SINGLE COIL. FOR SYSTEMS HAVING A COIL BANK OF TWO OR MORE COILS, EXTEND VERTICAL BRANCHES AND CONNECT TO ADDED COILS.
2. FOR TERMINAL DUCT REHEAT, PROVIDE PRESSURE GAUGE, COCK AND THERMOMETER WELL ONLY.

HOT WATER REHEAT COIL PIPING

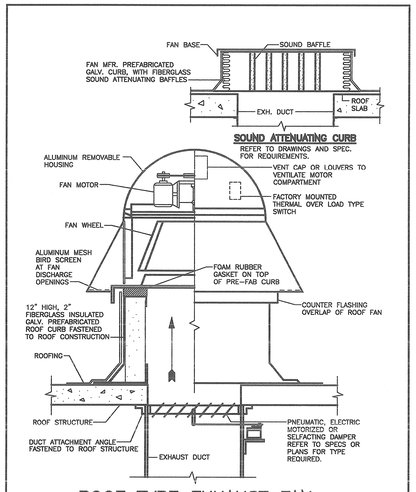

ROOF TYPE EXHAUST FAN
(WITH PREFABRICATED CURBS)

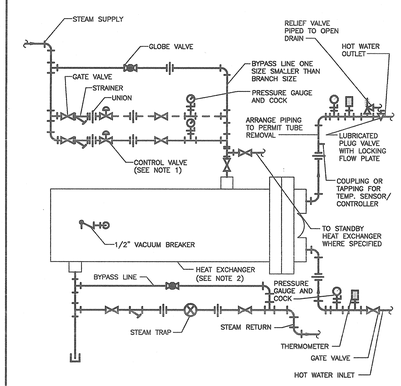

NOTES:
1. WHERE CAPACITY OF 2 1/2" AUTOMATIC STEAM VALVE IS EXCEEDED, UTILIZE SECOND VALVE IN PARALLEL AS SHOWN ABOVE DOTTED.
2. HEAT EXCHANGER TO BE SET ON CRADLE SADDLES, ATTACH TO STRUCTURAL SUPPORT.

STEAM TO HOT WATER HEAT EXCHANGER

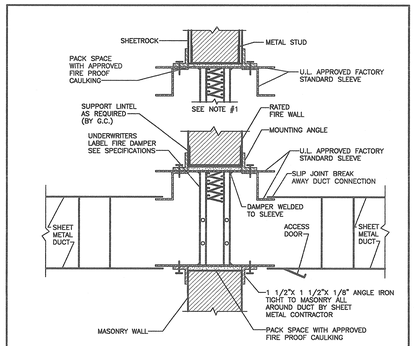

NOTES:
1. IN RATED SHEETROCK WALLS, METAL STUD FRAME PROVIDED BY GENERAL CONTRACTOR.
2. TYPICAL FOR DUCTS 12" OR LESS IN DEPTH.

DETAIL OF OUT OF AIR STREAM FIRE DAMPER

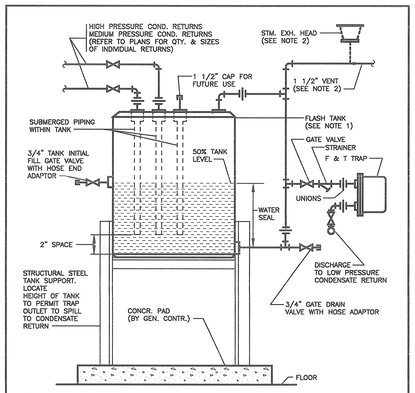

NOTES:
1. REFER TO PLANS FOR SIZE/CAPACITY OF TANKS. TANKS SHALL BE SUITABLE FOR WORKING PRESSURE OF 125 P.S.I.G. OR 150 PERCENT OF MAXIMUM OPERATING PRESSURE; WHICHEVER IS GREATER.
2. EXTEND VENT LINE AND CONNECT TO CONTINUOUS USE LOW PRESSURE STEAM MAIN WHEN AVAILABLE. WHEN NOT AVAILABLE, EXTEND VENT AND TERMINATE AT ROOF LOCATED STEAM EXHAUST HEAD

VERTICAL FLASH TANKS FLOOR MOUNTED

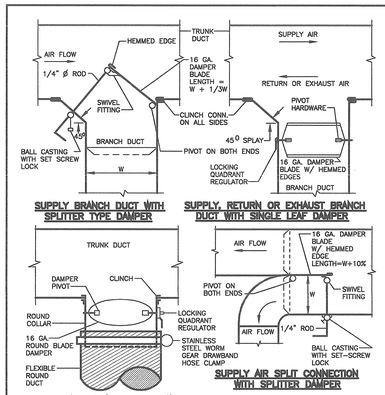

NOTES:
1. PROVIDE ALL BRANCH DUCTS WITH MANUALLY OPERATED VOLUME DAMPERS FOR BALANCING AIR SYSTEMS. THESE DAMPERS SHALL BE INDEPENDENT OF DAMPERS FURNISHED WITH DIFFUSERS AND REGISTERS, WHICH SHALL ONLY BE UTILIZED FOR TRIM BALANCING WITHOUT GENERATING NOISE.
2. FOR DUCTS WIDER THAN 48" USE MULTIPLE SINGLE LEAF DAMPERS OR OPPOSED-ACTION MULTI-BLADE DAMPERS; EACH WITH LOCKING QUADRANT REGULATOR.

BRANCH DUCT VOLUME DAMPERS

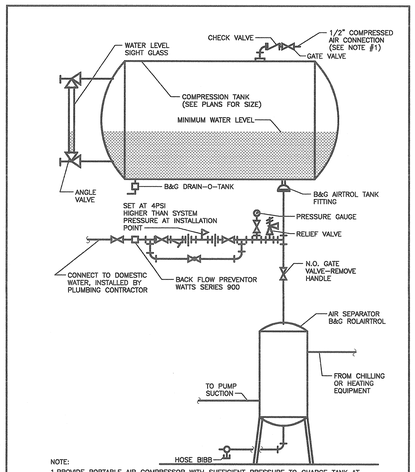

NOTE:
1. PROVIDE PORTABLE AIR COMPRESSOR WITH SUFFICIENT PRESSURE TO CHARGE TANK AT SYSTEM PRESSURE. TURN COMPRESSOR OVER TO OWNER AFTER INITIAL CHARGE.

CLOSED COMPRESSION TANK

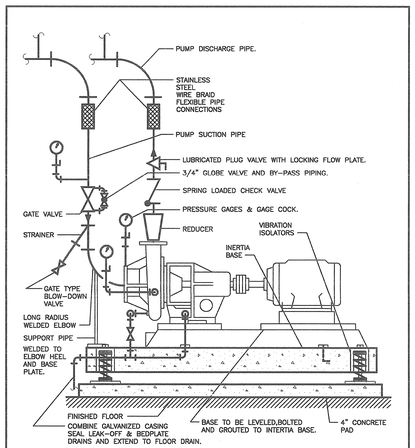

NOTES:
1. INERTIA BASE HEIGHTS SHALL BE AS FOLLOWS: UP TO 15HP=6", 20-50HP=8", 60-100HP=10", OVER 100HP=12".

VERTICAL SPLIT CASE, END-SUCTION WATER PUMP INSTALLATIONS

M.E. RINKER, SR. SCHOOL OF BUILDING CONSTRUCTION

M.E. RINKER, Sr. HALL
SCHOOL OF BUILDING CONSTRUCTION

UNIVERSITY OF FLORIDA-GAINESVILLE
PROJECT NO. BR-191

ARCHITECTS
CROXTON COLLABORATIVE/
GOULD EVANS ASSOCIATES

CROXTON COLLABORATIVE ARCHITECTS
475 FIFTH AVENUE
NEW YORK, NY 10017
TEL 212.683.1998
FAX 212.683.2799

GOULD EVANS ASSOCIATES
5405 WEST CYPRESS STREET
TAMPA, FL 33607
TEL 813.288.0729
FAX 813.288.0231

MECHANICAL ENGINEERS
LEHR ASSOCIATES
130 WEST 30TH STREET
NEW YORK, NY 10001-4092
TEL 212.947.8050
FAX 212.967.2059

STRUCTURAL ENGINEERS
WALTER P. MOORE
201 EAST KENNEDY BOULEVARD
TAMPA, FL 33602
TEL 813.221.2424
FAX 813.221.2289

CIVIL ENGINEERS
BROWN & CULLEN, INC.
3530 NW 43 STREET
GAINESVILLE, FL 32605
TEL 352.375.8999
FAX 352.375.0833

LANDSCAPE ENGINEERS
McCLAIN DESIGN GROUP, INC.
1843 NW 39 DRIVE
GAINESVILLE, FL 32605
TEL 352.372.2808
FAX 352.372.6622

CONSULTANT
SEEGY-BISCH
AUSSERE SULZBACHER STR. 118
NURNBERG, GERMANY
TEL 0911/59 90 99
FAX 0911/59 98 05

THIS DRAWING, AS AN INSTRUMENT OF SERVICE, IS AND SHALL REMAIN, PROPERTY OF CROXTON COLLABORATIVE ARCHITECTS. THIS DRAWING SHALL NOT BE REPRODUCED, PUBLISHED, USED ON OTHER PROJECTS, USED FOR ADDITIONS, OR USED IN COMPLETION OF THIS PROJECT BY OTHERS EXCEPT BY AGREEMENT IN WRITING. © 2001 CROXTON COLLABORATIVE ARCHITECTS/ GOULD EVANS ASSOCIATES.

NO.	ISSUE/REVISION	DATE

100% CONSTRUCTION DOCUMENTS

DRAWING NAME
MECHANICAL DETAILS I

DATE 11.21.01
SCALE NTS
DRAWN BY/CHECKED BY MO/MP
DRAWING NUMBER M-7

VALENTINE A. LEHR CERTIFICATE NO. 17088 REGISTERED PROFESSIONAL ENGINEER STATE OF FLORIDA